YAMAHA

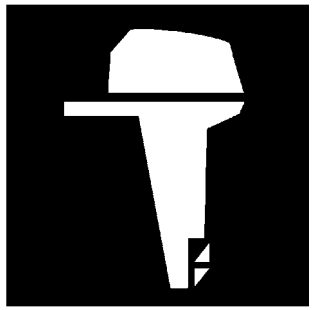

PARTS CATALOGUE
CATALOGO DE REPUESTOS

4ACMH Y12 (6E0C)
5CMH Y12 (6E3C)
5CSMH Y12 (6E4C)

1L6E0-200SA

( )

YAMAHA
GENUINE
Parts & Accessories

4ACMH
5CMH/5CSMH
PARTS CATALOGUE
©2012 by Yamaha Motor Co., Ltd.
1st edition, July 2012
All rights reserved.
Any reprinting or unauthorized use
without the written permission of
Yamaha Motor Co., Ltd.
is expressly prohibited.
Printed in Japan.

4ACMH
5CMH/5CSMH
CATALOGO DE REPUESTOS
©2012 por Yamaha Motor Co., Ltd.
1ª edición, julio 2012
Todos los derechos reservados.
Toda reproducción o uso no autorizado
sin el consentimiento escrito de
Yamaha Motor Co., Ltd.
quedan expresamente prohibidos
Impreso en Japón.

FOREWORD

This Parts Catalogue is related to the parts for the model(s) on the cover page. When you are ordering replacement parts, please refer to this Parts Catalogue and quote both part numbers and part names correctly.

1. Modifications or additions which have been made after the issue of the Parts Catalogue will be announced in the Parts News.
   It is advisable that you make the necessary corrections to the Parts Catalogue according to the Parts News.

2. Abbreviations
   The following abbreviations are used in this Parts Catalogue.

   "UR" Use specified parts number.
   "UN" Use as many as needed.
   "AP" Alternate Parts
   "LM" Locally Made (Parts need to be ordered locally)
   "F#" Frame No. (Applicable machine No.)
   "O/S" Over Size

3. The number of components for assembly
   - Parts, which are to be supplied in an assembly, are listed with a dot (.) in front of the part name as shown below.
   - The numeral appearing to the right of each component part indicates the quantity of parts for each assembly unit.

PART NO.	DESCRIPTION	Q'TY	REMARKS
2F5–83310–60	FRONT FLASHER LIGHT ASSY	2	
115–83311–60	.BULB (6V–18W)	1	

4. Applicable colours of graphics are represented in the "REMARKS" as shown below.

PART NO.	DESCRIPTION	Q'TY	REMARKS
2N4–24110–00–X5	FUEL TANK COMP.	2	MXR
3J1–24240–10	.GRAPHIC, FUEL TANK	1	FOR MXR

5. Note that the illustrations for reference in finding parts numbers are not to be used for assembling. When assembling, please use the applicable service manual.

6. The asterisk (*) before a reference number indicates modified items after the first edition.

7. Applicable Serial No.

   Engine Serial No.

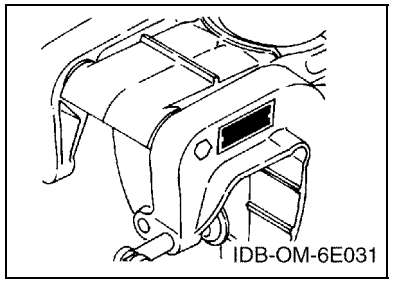

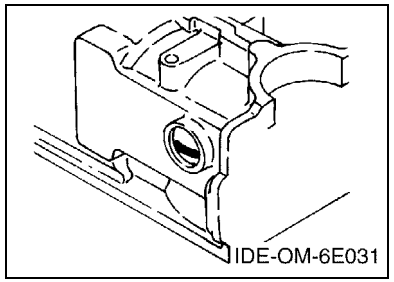

8. Applicable Engine Starting Serial No.

Model	Serial No.	Model	Serial No.
4AC	6E0K-1020881	5C	6E3K-1070441
5CS	6E3K-1070441		

9. Applicable Colour Code

Abbreviation	Colour Name	Colour Code
DBNM2	DARK BLUISH GRAY METALLIC 2	004D

10. Quantity Column Information

Column No.	Name Of Q'ty Column	Applicable Model
1	6E0C	4ACMH
2	6E3C	5CMH
3	6E4C	5CSMH

PROLOGO

Este catálogo de repuestos corresponde a las piezas para el o los modelos que figuran en la página de portada. Al formular el pedido de repuestos, se ruega citar este catálogo y especificar correctamente el número y el nombre de las piezas.

1. Las modificaciones y agregados que se hayan realizado después de la edición de este Catálogo de Repuestos, serán anunciados en las Informaciones de Recambios.
   Es recomendable que se hagan las correcciones necesarias en el Catálogo de Repuestos de acuerdo con las Informaciones de Recambios.

2. Abreviaciones
   En este. Catálogo de Repuestos se emplean las siguientes abreviaciones.

   "UR" Usar el número de partes especificado
   "UN" Usar la cantidad necesaria
   "AP" Piezas sustitutivas
   "LM" Fabricación local (Hay que pedir los repuestos en las cercanías)
   "F#" Nº de bastidor (Nº aplicable a la máquina)
   "O/S" Sobredimensionado

3. La cantidad de componentes para el montaje
   - Los componentes, suministrados como conjunto, se describen con un punto (.) que precede al nombre del parte como se indica a continuación.
   - La numeración que aparece a la derecha de cada descripción indica la cantidad de partes por cada unidad de conjunto.

CODIGO Nº	DESCRIPCION	CANT.	OBSERVACIONES
2F5–83310–60	ENSAMBLAJE DE LA LUZ	2	
115–83311–60	.BOMBILLA (6V–18W)	1	

4. Los colores de los componentes se indican como sigue en la columna de "OBSERVACIONES".

CODIGO Nº	DESCRIPCION	CANT.	OBSERVACIONES
2N4–24110–00–X5	COMP. DEL TANQUE	2	MXR
3J1–24240–10	.GRAFICO, DEL TANQUE	1	PARA MXR

5. Debe tenerse en cuenta que las ilustraciones sirven como guia para la búsqueda de los números de partes y no deben usarse para el montaje. Durante el montaje, se recomienda usar el manual de taller correspondiente.

6. EL asterisco (*) antes del número de referencia indica los elementos modificados después de la primera edición.

7. Números de serie

   Nº de Serie del motor

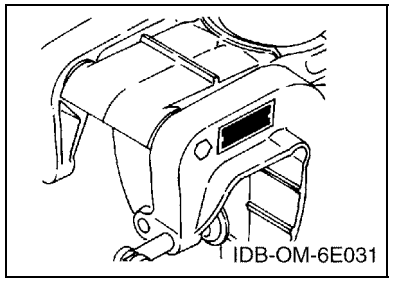

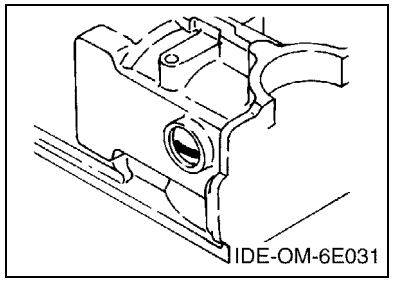

8. Números de serie del motor

Modelo	Nº de serie	Modelo	Nº de serie
4AC	6E0K-1020881	5C	6E3K-1070441
5CS	6E3K-1070441		

9. Códigos de color aplicables

Abreviatura	Nombre de color	Código de color
DBNM2	DARK BLUISH GRAY METALLIC 2	004D

10. Informacion para la columna de cantidades

Columna Nº	Nombre de la columna de cantidades	Modelo aplicable
1	6E0C	4ACMH
2	6E3C	5CMH
3	6E4C	5CSMH

CONTENTS

TOP COWLING 1
CYLINDER & CRANKCASE 2
INTAKE 5
STARTER 7
GENERATOR 9
ELECTRICAL 10
BOTTOM COWLING 1 11
BOTTOM COWLING 2 14
CONTROL 15
UPPER CASING & BRACKET 17
LOWER CASING & DRIVE 20
FUEL TANK 23
REPAIR KIT 24

INDEX

NUMERICAL INDEX 26

CONTENIDO

SOPORTE SUPERIOR 1
CYLINDRO & CARTER 2
ADMISION 5
ARRANQUE 7
GENERADOR 9
ELECTRICO 10
CUBIERTA INFERIOR 1 11
CUBIERTA INFERIOR 2 14
CONTROL 15
CUBIERTA SUPERIOR Y SOPORTE 17
IMPULSOR E INFERIOR 20
DEPOSITO DE COMBUSTIBLE 23
ESTUCHE REPARATION 24

INDICE

INDICE NUMERICO 26

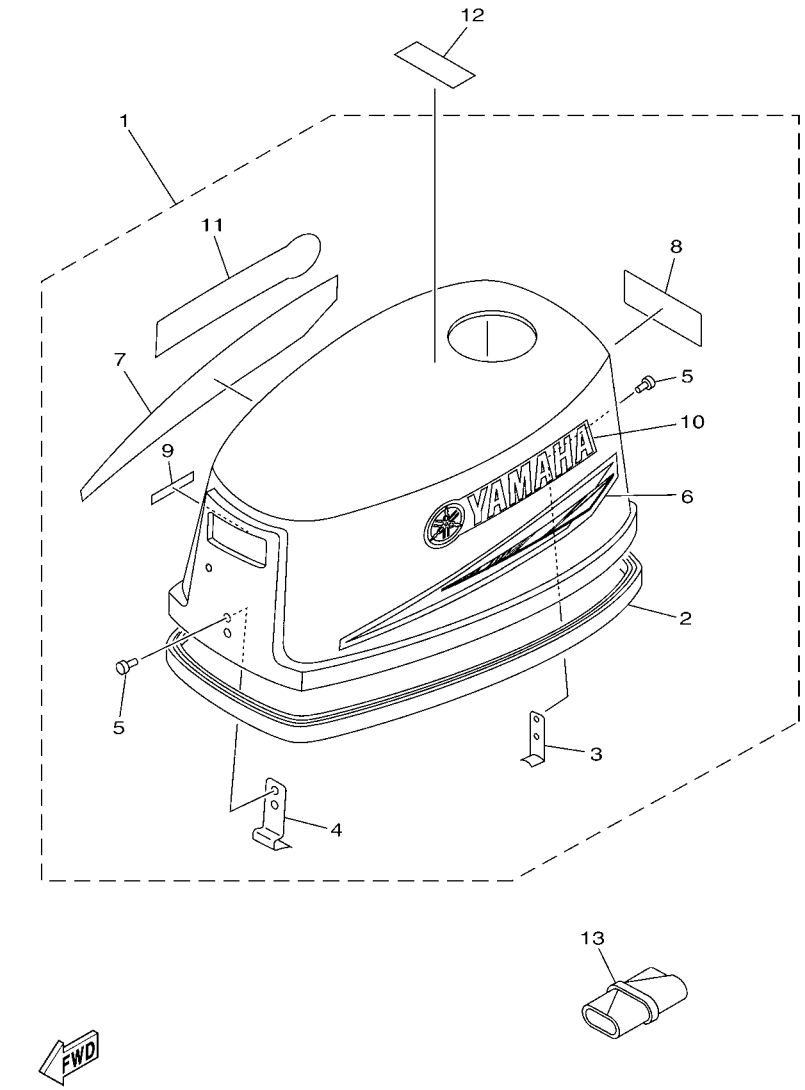

FIG. 1 TOP COWLING SOPORTE SUPERIOR

REF. NO.	PART NO. CODIGO Nº	DESCRIPTION DESCRIPCION	6E0C	6E3C	6E4C			REMARKS OBSERVACIONES
1	6E0–42610–90	TOP COWLING ASSY SOPORTE SUPERIOR COMPL.	1					
	6E3–42610–60	TOP COWLING ASSY SOPORTE SUPERIOR COMPL.		1				
	6E4–42610–40	TOP COWLING ASSY SOPORTE SUPERIOR COMPL.			1			
2	6E0–42615–00	.SEAL .SELLO	1	1	1			
3	6E0–42647–01	.HOLDER, CLAMP BAND .MORDAZA DE ABRAZADERA	1	1	1			
4	6E0–42651–02	.HOOK .GANCHO	1	1	1			
5	90266–04M00	.RIVET .REMACHE	4	4	4			
6	6E0–42675–40	.GRAPHIC, SIDE 1 .CALCAMONIA LATERAL 1	1	1	1			
7	6E0–42676–40	.GRAPHIC, SIDE 2 .CALCAMONIA LATERAL 2	1	1	1			
8	6E0–42678–40	.GRAPHIC, REAR .CALCAMONIA TRASERA	1					
	6E3–42678–40	.GRAPHIC, REAR .CALCAMONIA TRASERA		1	1			
9	6E0–44191–11	.INDICATOR, SHIFT .INDICADOR DE CAMBIOS	1	1	1			
10	6E0–42681–40	.MARK, COWLING .MARCA DE CUBIERTA	1	1	1			
11	6E0–42681–40	.MARK, COWLING .MARCA DE CUBIERTA	1	1	1			
12	6S7–42698–40	LABEL, WARNING (FUEL) ETIQUETA DE ADVERTENCIA	1	1				
13	656–W2810–02	TOOL KIT JUEGO DE HERRAMIENTAS	1	1	1			

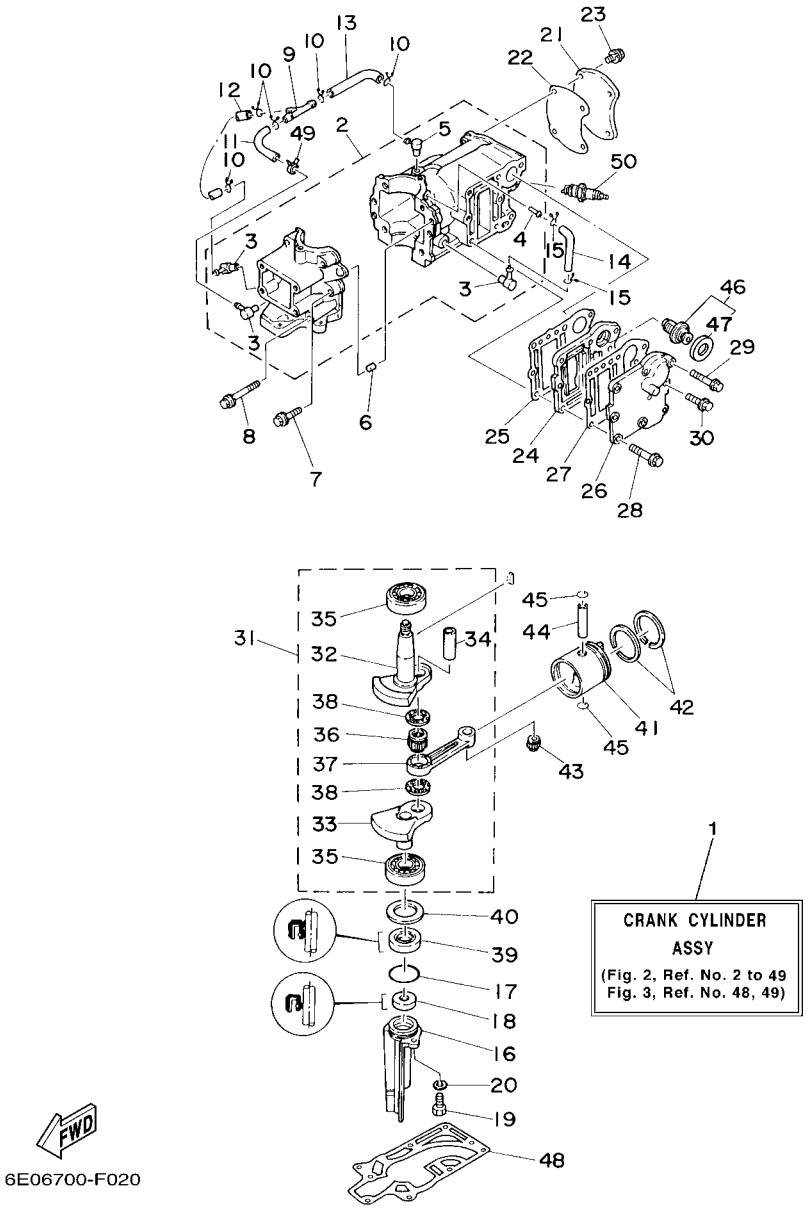

FIG. 2 CYLINDER & CRANKCASE CYLINDRO & CARTER

REF. NO.	PART NO. CODIGO Nº	DESCRIPTION DESCRIPCION	6E0C	6E3C	6E4C			REMARKS OBSERVACIONES
1	6E0–W0090–04–1S	CRANK CYLINDER ASSY BLOQUE MOTOR COMPLETO	1					
	6E3–W0090–04–1S	CRANK CYLINDER ASSY BLOQUE MOTOR COMPLETO		1	1			
2	6E0–15100–01	CRANKCASE ASSY CARTER COMPLETO	1					
	6E3–15100–02	CRANKCASE ASSY CARTER COMPLETO		1	1			
3	650–11370–01	.CHECK VALVE ASSY .VALVULA DE CONTROL COMPL.	3	3	3			
4	624–14485–00	.PIPE, JOINT .TUBO DE UNION	1	1	1			
5	6E5–11372–01	.NIPPLE, HOSE .NIPLE DE MANGUERA	1	1	1			
6	93606–12019	PIN, DOWEL PASADOR DE CLAVIJA	2	2	2			
7	90105–06M16	BOLT, FLANGE TORNILLO	4	4	4			
8	90105–06M17	BOLT, FLANGE TORNILLO	2	2	2			
9	6E0–24378–00	PIPE, JOINT 3 TUBO DE UNION 3	1	1	1			
10	90467–06016	CLIP PRESILLA	5	5	5			
11	90445–07M00	HOSE (L100) TUBO (L100)	1	1	1			
12	90445–07M28	HOSE (L70) TUBO (L70)	1	1	1			
13	90445–07M32	HOSE (L120) TUBO (L120)	1	1	1			
14	90445–07M28	HOSE (L70) TUBO (L70)	1	1	1			
15	90467–06016	CLIP PRESILLA	2	2	2			
16	6E0–15396–03–CA	HOUSING, OIL SEAL CAJA DE SELLO DE ACEITE	1	1	1			
17	93210–31MJ5	O-RING ANILLO O	1	1	1			
18	93101–10M25	OIL SEAL SELLO ACEITE	1	1	1			
19	97095–06016	BOLT PERNO	1	1	1			
20	92995–06600	WASHER ARANDELA	1	1	1			
21	6E0–11191–01–1S	COVER, CYLINDER HEAD 1 TAPA CULATA DE CILINDRO 1	1					
	6E3–11191–01–1S	COVER, CYLINDER HEAD 1 TAPA CULATA DE CILINDRO 1		1	1			
22	6E0–11193–A1	GASKET, HEAD COVER 1 EMPAQUE	1					
	6E3–11193–A1	GASKET, HEAD COVER 1 EMPAQUE		1	1			
23	90105–06039	BOLT, FLANGE TORNILLO	4	4	4			

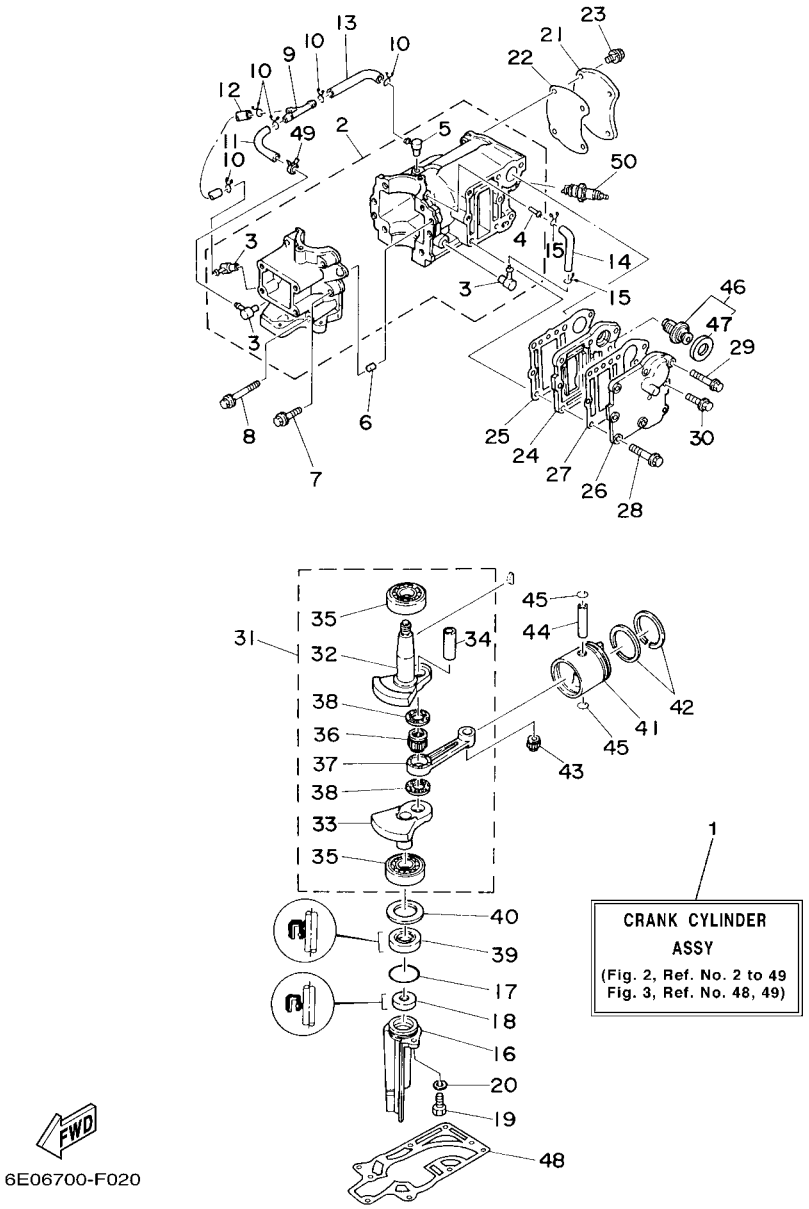

FIG. 2 CYLINDER & CRANKCASE CYLINDRO & CARTER

REF. NO.	PART NO. CODIGO Nº	DESCRIPTION DESCRIPCION	6E0C	6E3C	6E4C			REMARKS OBSERVACIONES
24	6E0–41111–01–1S	INNER COVER, EXHAUST CUBIERTA INTERIOR DE ESCAPE	1					
	6E3–41111–01–1S	INNER COVER, EXHAUST CUBIERTA INTERIOR DE ESCAPE		1	1			
25	6E0–41112–A1	GASKET, EXHAUST INNER COVER EMPAQUE	1					
	6E3–41112–A1	GASKET, EXHAUST INNER COVER EMPAQUE		1	1			
26	6E0–41113–01–1S	OUTER COVER, EXHAUST CUBOERTA EXTERIOR DE ESCAPE	1					
	6E3–41113–01–1S	OUTER COVER, EXHAUST CUBOERTA EXTERIOR DE ESCAPE		1	1			
27	6E0–41114–A1	GASKET, EXHAUST OUTER COVER EMPAQUE	1					
	6E3–41114–A1	GASKET, EXHAUST OUTER COVER EMPAQUE		1	1			
28	90105–06037	BOLT, FLANGE TORNILLO	7					
	90105–06037	BOLT, FLANGE TORNILLO		8	8			
29	90105–06035	BOLT, FLANGE TORNILLO	1					
30	90105–06039	BOLT, FLANGE TORNILLO	1	1	1			
31	6E0–11400–00	CRANKSHAFT ASSY CIGUENAL COMPLETO	1					
	6E3–11400–00	CRANKSHAFT ASSY CIGUENAL COMPLETO		1	1			
32	6E0–11412–00	.CRANK 1 .MANIVELA 1	1					
	6E3–11412–00	.CRANK 1 .MANIVELA 1		1	1			
33	6E0–11422–00	.CRANK 2 .MANIVELA 2	1					
	6E3–11422–00	.CRANK 2 .MANIVELA 2		1	1			
34	6G1–11681–00	.PIN, CRANK 1 .PASADOR MANIVELA 1	1	1	1			
35	93306–204U0	.BEARING .COJINETE	2	2	2			
36	93310–418V1	.BEARING .COJINETE DE RODILLOS	1	1	1			
37	6E0–11651–01	.ROD, CONNECTING .BIELA	1	1	1			
38	90209–18112	.WASHER .ARANDELA DE SEPARACION	2	2	2			
39	93101–20M29	OIL SEAL SELLO ACEITE	1	1	1			
40	90201–32M48	WASHER, PLATE ARANDELA PLANA	1	1	1			
41	6E0–11631–00–98	PISTON (STD) PISTON (NORMA)	1					
	6E3–11631–00–98	PISTON (STD) PISTON (NORMA)		1	1			

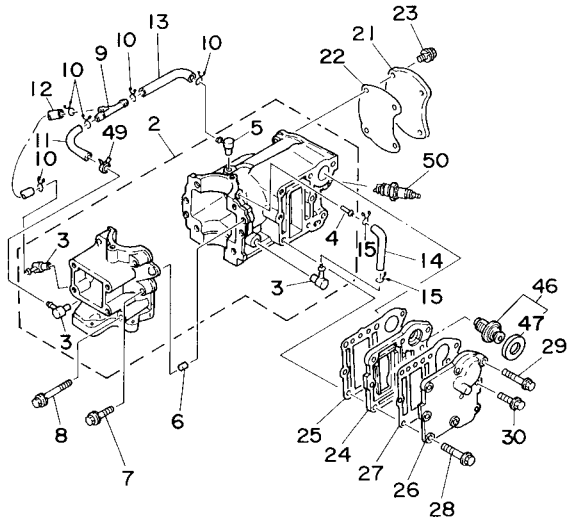

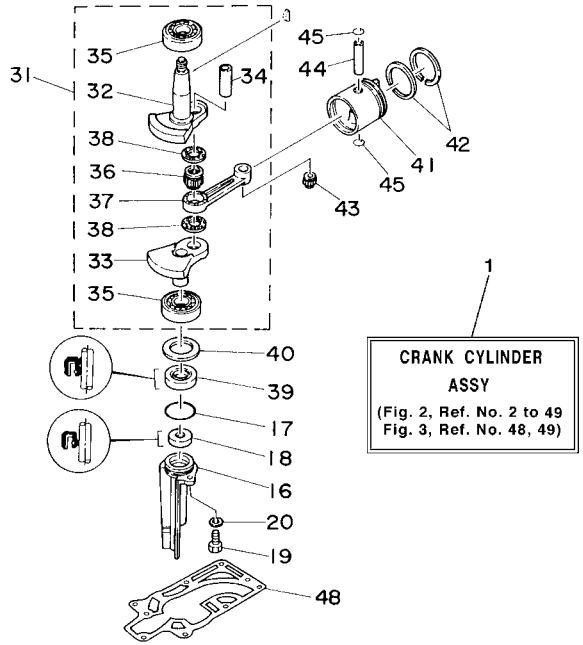

6E06700-F020

FIG. 2 CYLINDER & CRANKCASE CYLINDRO & CARTER

REF. NO.	PART NO. CODIGO Nº	DESCRIPTION DESCRIPCION	6E0C	6E3C	6E4C			REMARKS OBSERVACIONES
42	6G1–11610–00	PISTON RING SET (STD) JUEGO DE AROS (NORMA)	1					
	6J1–11610–00	PISTON RING SET (STD) JUEGO DE AROS (NORMA)		1	1			
43	93310–112V0	BEARING COJINETE DE RODILLOS	1	1	1			
44	6G1–11633–00	PIN, PISTON PASADOR, PISTON	1	1	1			
45	93450–13022	CIRCLIP SEGURO	2	2	2			
46	6E5–12411–02	THERMOSTAT TERMOSTAT	1					FOR CAR,CAR(CE) FOR CAR,CAR(CE)
47	6E5–12412–00	.SEAL, THERMOSTAT .SELLO TERMOSTATO	1					
48	6E0–45113–A1	GASKET, UPPER CASING EMPAQUE	1	1	1			
49	90468–07M02	CLIP PRESILLA	1	1	1			
50	94702–00040	PLUG, SPARK (NGK B7HS) BUJIA (NGK B7HS)	1	1	1			
	94702–00272	PLUG, SPARK (NGK BR7HS) BUJIA (NGK BR7HS)	1	1	1			FOR CHN,CAR(CE),TWN FOR CHN,CAR(CE),TWN

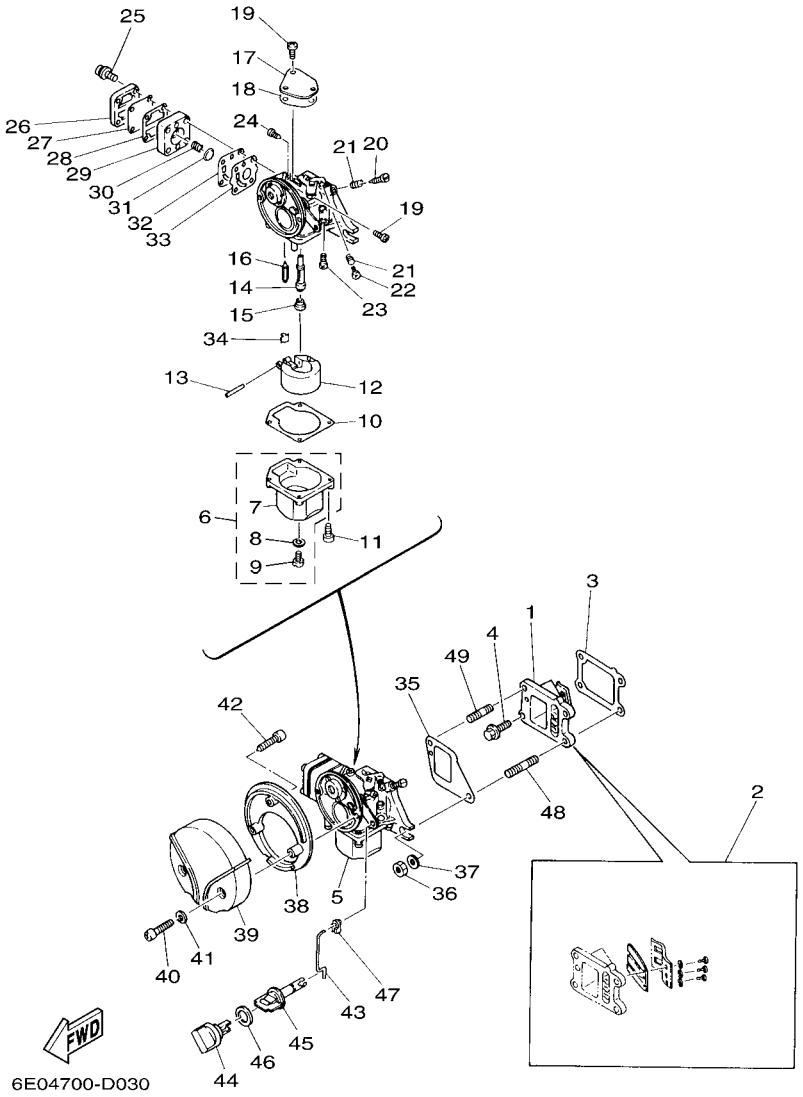

FIG. 3 INTAKE ADMISION

REF. NO.	PART NO. CODIGO Nº	DESCRIPTION DESCRIPCION	6E0C	6E3C	6E4C			REMARKS OBSERVACIONES
1	6J1–13610–00	REED VALVE ASSY VALVULA DE LAMINAS COMPLETA	1	1	1			
	6E0–13610–00	REED VALVE ASSY VALVULA DE LAMINAS COMPLETA	1					FOR CAR,CAR(CE) FOR CAR,CAR(CE)
2	6J1–W0004–00	.REED SET .JUEGO DE VALVULAS DE LENGUETA	1	1	1			FOR 6J1-13610-00 FOR 6J1-13610-00
	6E0–W0004–00	.REED SET .JUEGO DE VALVULAS DE LENGUETA	1					FOR 6E0-13610-00 FOR 6E0-13610-00
3	6E0–13621–A2	GASKET, VALVE SEAT JUNTA, DE VALV.DE EMPAQUE	1	1	1			
4	95895–06016	BOLT, FLANGE TORNILLO DE REBORDE	2	2	2			
5	6E0–14301–05	CARBURETOR ASSY 1 CARBURADOR COMPLETO 1	1					
	6E3–14301–05	CARBURETOR ASSY 1 CARBURADOR COMPLETO 1		1	1			
6	6E0–14180–00	.FLOAT CHAMBER ASSY .CAMARA DE BOIA COMPLETE	1	1	1			
7	6E0–14381–02	..BODY, FLOAT CHAMBER ..CUERPO DE CAMARA DE BOIA	1	1	1			
8	646–14198–01	..GASKET ..EMPAQUE	1	1	1			
9	97890–05006	..SCREW, PAN HEAD ..TORNILLO	1	1	1			
10	6E0–14384–00	.GASKET, FLOAT CHAMBER .EMPAQUE DE CAMARA DE BOIA	1	1	1			
11	97980–04116	.SCREW, WITH WASHER .TORNILLO, CON ARANDELA	4	4	4			
12	6E7–14385–01	.FLOAT .BOIA	1	1	1			
13	647–14386–00	.PIN, FLOAT .PASADOR DE BOIA	1	1	1			
14	6E0–14341–01	.NOZZLE, MAIN .BOQUILLA PRINCIPAL	1					
	6E3–14341–02	.NOZZLE, MAIN .BOQUILLA PRINCIPAL		1	1			
15	648–14343–40	.JET, MAIN (# 80) .INYECTOR PRINCIPAL (# 80)	1	1	1			
16	6F5–14392–00	.VALVE, NEEDLE .VALVULA DE AGUJA	1	1	1			
17	6E0–14157–00	.COVER, PLATE .CUBIERTA DE MEZCLA	1	1	1			
18	6E0–14227–00	.GASKET .EMPAQUE	1	1	1			
19	97890–04007	.SCREW, PAN HEAD .TORNILLO	4	4	4			
20	647–14323–00	.SCREW, AIR ADJUSTING .TORNILLO DE AJUSTE DE AIRE	1	1	1			
21	646–14212–01	.SPRING, PILOT ADJUSTING .RESORTE DE AJUSTE DE PILOTO	2	2	2			
22	664–14321–01	.SCREW, THROTTLE .TORNILLO DE OBTURADOR	1	1	1			
23	648–14342–23	.JET, PILOT (# 46) .ESPREA DE PILOTO (# 46)	1					

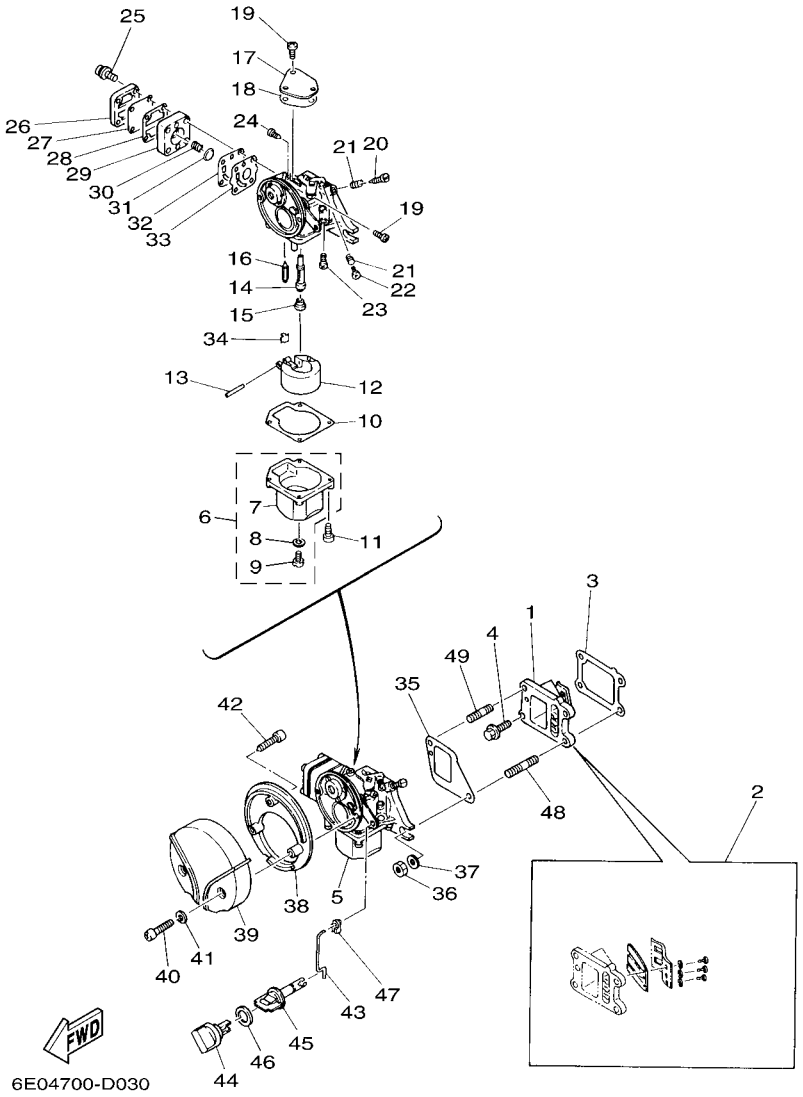

FIG. 3 INTAKE ADMISION

REF. NO.	PART NO. CODIGO Nº	DESCRIPTION DESCRIPCION	6E0C	6E3C	6E4C			REMARKS OBSERVACIONES
23	648–14342–26	.JET, PILOT (# 52) .ESPREA DE PILOTO (# 52)		1	1			
24	647–14326–00	.SCREW, GUIDE .TORNILLO DE GUIA	1	1	1			
25	97980–04120	.SCREW, WITH WASHER .TORNILLO, CON ARANDELA	4	4	4			
26	6E0–24413–00	.COVER .CUERPO 2	1	1	1			
27	6E0–24471–00	.DIAPHRAGM .DIAFRAGMA	1	1	1			
28	6E0–24435–00	.GASKET, BODY 2 .EMPAQUE	1	1	1			
29	6E0–24412–00	.BODY 1 .CUERPO 1	1	1	1			
30	6E0–24423–00	.SPRING, DIAPHRAGM .RESORTE DE DIAFRAGMA	1	1	1			
31	6E0–14346–00	.PLATE .PLACA	1	1	1			
32	6E0–24411–00	.DIAPHRAGM .DIAFRAGMA	1	1	1			
33	6E0–24434–00	.GASKET, BODY .EMPAQUE	1	1	1			
34	6E0–14159–00	.CLIP .PRESILLA	1	1	1			
35	6E0–14198–A0	GASKET EMPAQUE	1	1	1			
36	95380–06700	NUT TUERCA	2	2	2			
37	92995–06600	WASHER ARANDELA	2	2	2			
38	6E0–14417–00	COVER 1 CUBIERTA 1	1	1	1			
39	6E0–14418–00	COVER 2 CUBIERTA 2	1	1	1			
40	97880–05025	SCREW, PAN HEAD TORNILLO DE CABEZA CON PLANA	2	2	2			
41	92990–05600	WASHER, PLATE ARANDELA PLANA	2	2	2			
42	97780–40720	SCREW, TAPPING TORNILLO DE CABEZA DE CONO ACH	1	1	1			
43	6E0–41256–00	ROD, CHOKE 1 VARILLA DE AHOGADOR	1	1	1			
44	6E0–41271–01	KNOB, CHOKE PERILLA AHOGADOR	1	1	1			
45	6E0–41272–00	KNOB, CHOKE PERILLA AHOGADOR	1	1	1			
46	90202–12M16	WASHER, PLATE ARANDELA DE PLANA	1	1	1			
47	661–41262–02	JOINT, CHOKE LEVER CONECTOR DE AHOGADOR	1	1	1			
48	95627–06325	BOLT, STUD PERNO DE PUNTAL	1	1	1			
49	90116–06M08	BOLT, STUD ESPARRAGO	1	1	1			

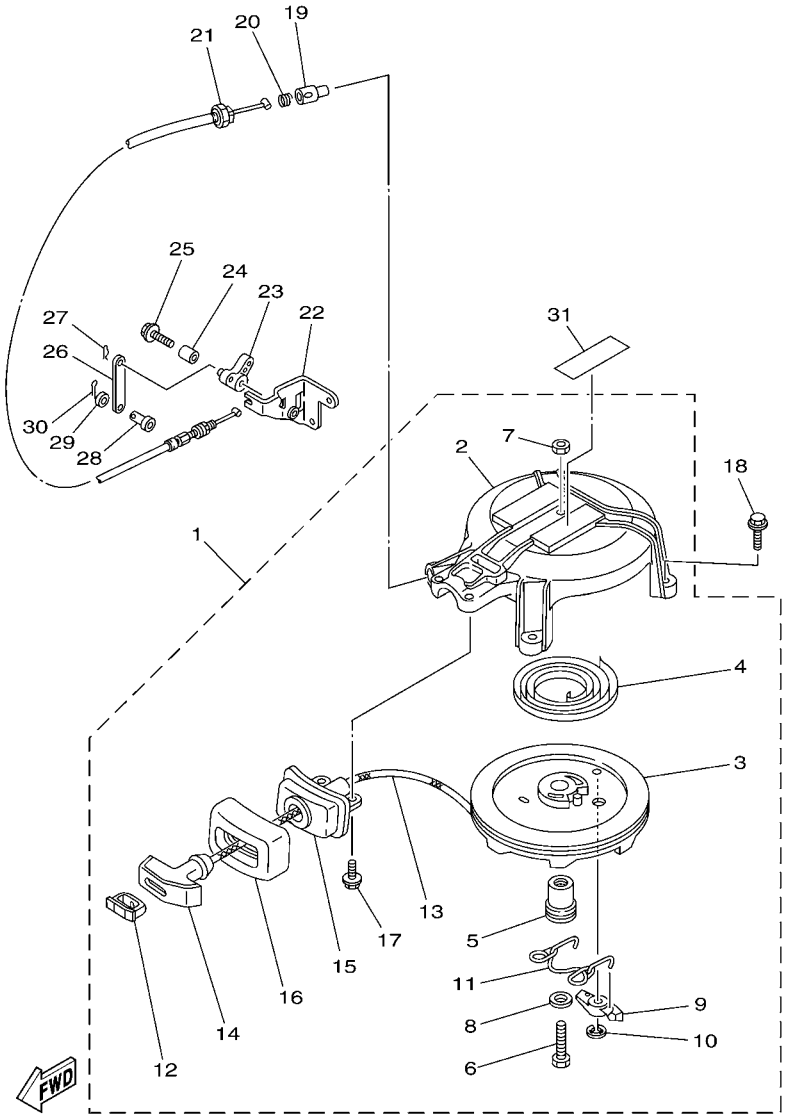

6E08200-H040

*1:CUT FROM 50M ROLLS,PART NO.90890-44372,CUTTING LENGTH 1.85M

*1:CORTE DE UN RODILLO DE 50M , PARTS NUMERO 90890-44372, LARGO DEL CORTE 1.85M

FIG. 4 STARTER ARRANQUE

REF. NO.	PART NO. CODIGO Nº	DESCRIPTION DESCRIPCION	6E0C	6E3C	6E4C			REMARKS OBSERVACIONES
1	6E0–15710–73–94	STARTER ASSY ARRANQUE COMPLETO	1					
	6E4–15710–74–94	STARTER ASSY ARRANQUE COMPLETO		1	1			
2	6E4–15711–72–94	.CASE, STARTER .CAJA DE ARRANQUE	1	1	1			
3	6E0–15714–01	.DRUM, SHEAVE .TAMBOR ROLDANA	1	1	1			
4	90510–08M03	.SPRING, SPIRAL .RESORTE EN ESPIRAL	1	1	1			
5	6E0–15717–00	.SHAFT, STARTER .EJE DE ARRANQUE	1	1	1			
6	97313–06035	.BOLT .TORNILLO DE HEXAGONAL	1	1	1			
7	95303–06600	.NUT .TUERCA	1	1	1			
8	90201–06M30	.WASHER, PLATE .ARANDELA PLANA	1	1	1			
9	677–15741–01	.PAWL, DRIVE .TRINQUETE DE TRACCION	1	1	1			
10	93430–06M02	.CIRCLIP .SEGURO	1	1	1			
11	6E0–15705–00	.SPRING, DRIVE PAWL .RESORTE	1	1	1			
12	6G1–15779–00	.COVER .CUBIERTA	1	1	1			
13	*	.WIRE (L1850) .CABLE (L1850)	1	1	1			*1 *1
14	6G1–15755–00	.HANDLE, STARTER .MANIJA DE ARRANQUE	1	1	1			
15	6E0–15758–01	.GUIDE, ROPE .GUIA DE CUERDA	1					
	6E3–15758–01	.GUIDE, ROPE .GUIA DE CUERDA		1	1			
16	6E0–15761–00	.SEAL, RUBBER 1 .SELLO DE GOMA 1	1	1	1			
17	90105–06M14	.BOLT FLANGE .TORNILLO	2	2	2			
18	95895–06020	BOLT, FLANGE TORNILLO DE REBORDE	3	3	3			
19	656–15748–00	PLUNGER, STARTER STOP EMBOLO SEGURO DE ARRANQUE	1	1	1			
20	90501–10227	SPRING, COMPRESSION RESORTE DE COMPRESION	1	1	1			
21	6E4–15770–70	CABLE COMP., STARTER STOP CABLECOMPL DE SEGURO ARRANQUE	1	1	1			
22	6E0–15772–71	STAY 2 SOPORTE 2	1					
	6E4–15772–71	STAY 2 SOPORTE 2		1	1			
23	6E4–15746–70	ARM BRAZO	1	1	1			
24	90387–06504	COLLAR ESPACIADOR	1	1	1			

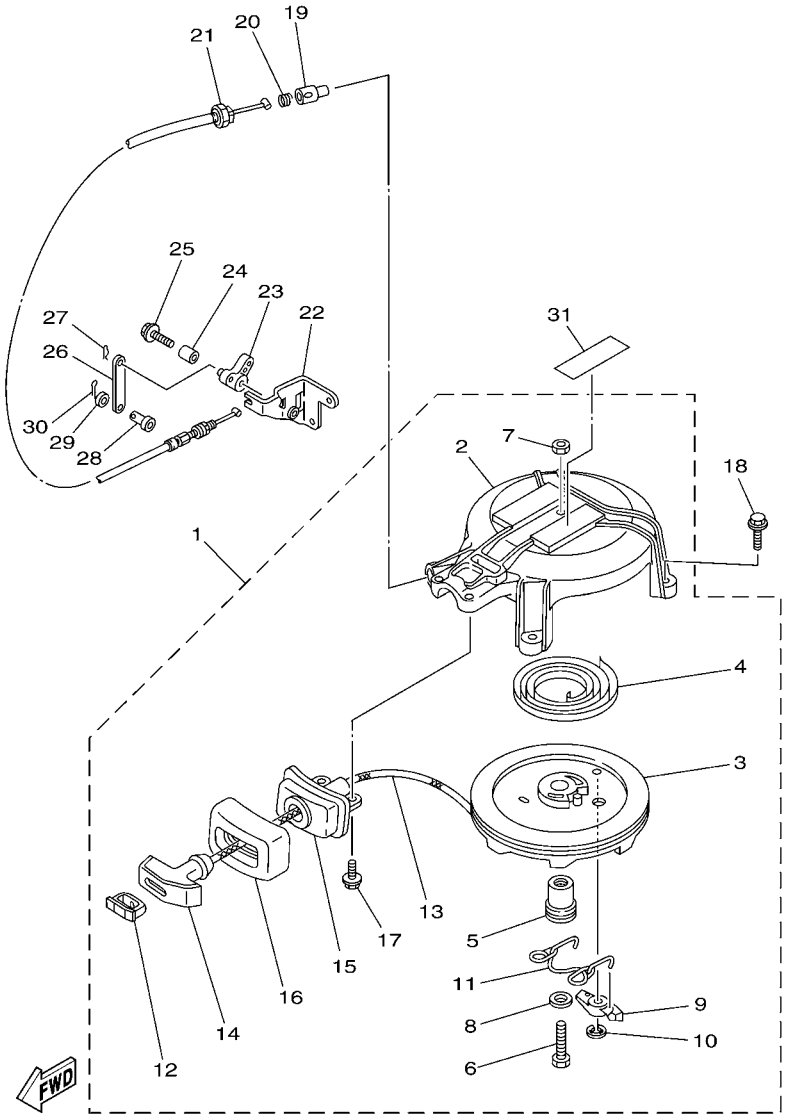

6E08200-H040

*1:CUT FROM 50M ROLLS,PART NO.90890-44372,CUTTING LENGTH 1.85M

*1:CORTE DE UN RODILLO DE 50M , PARTS NUMERO 90890-44372, LARGO DEL CORTE 1.85M

FIG. 4 STARTER ARRANQUE

REF. NO.	PART NO. CODIGO Nº	DESCRIPTION DESCRIPCION	6E0C	6E3C	6E4C			REMARKS OBSERVACIONES
25	90119–06M18	BOLT, WITH WASHER TORNILLO CON ARANDELA	1	1	1			
26	6E4–15747–70	LINK ESLABON	1	1	1			
27	90468–10005	CLIP PRESILLA	1	1	1			
28	91790–05010	PIN, CLEVIS PASADOR DE ABRAZADERA	1	1	1			
29	90202–05088	WASHER, PLATE ARANDELA DE PLANA	1	1	1			
30	91490–16010	PIN. COTTER CHAVETA	1	1	1			
31	6AH–81995–40	LABEL, WARNING ETIQUETA DE PRECAUCION	1	1	1			

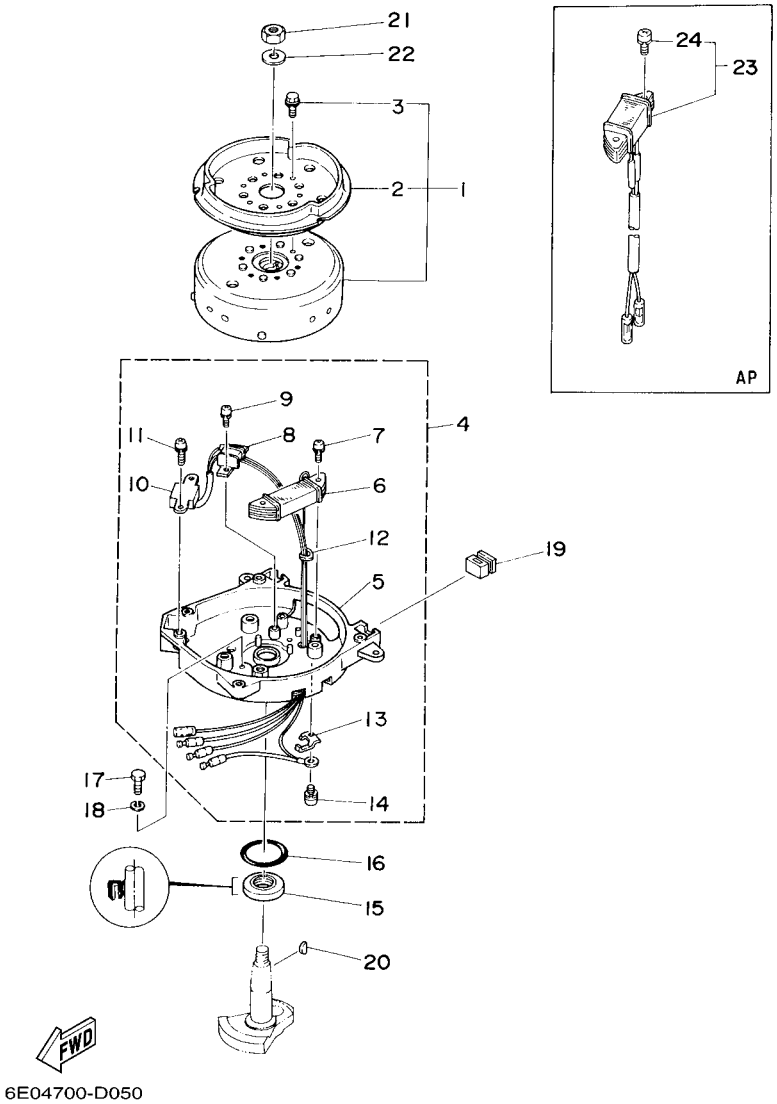

FIG. 5 GENERATOR GENERADOR

REF. NO.	PART NO. CODIGO Nº	DESCRIPTION DESCRIPCION	6E0C	6E3C	6E4C			REMARKS OBSERVACIONES
1	6E0–85550–72	ROTOR ASSY ROTOR COMPLETO	1	1	1			
2	6E0–15723–00–94	.PULLEY, STARTER .POLEA DE ARRANQUE	1	1	1			
3	90105–06M14	.BOLT FLANGE .TORNILLO	3	3	3			
4	6E0–85560–71	BASE ASSY CONJUNTO BASE	1	1	1			
5	6E0–15359–01–94	.HOUSING, OIL SEAL .CAJA DE SELLO DE ACEITE	1	1	1			
6	6E0–85520–70	.COIL, CHARGE .BOBINA DE CARGA	1	1	1			
7	90159–05038	.SCREW, WITH WASHER .TORNILLO CON VALONA	2	2	2			
8	6E0–85595–70	.COIL, PULSER .BOBINA DE PULSACION CONJUNTA 1	1	1	1			
9	90159–04036	.SCREW, WITH WASHER .TORNILLO CON VALONA	2	2	2			
10	6E0–85592–70	.PULSER COIL ASSY .BOBINA DE PULSACION CONJUNTA 2	1	1	1			
11	90159–05037	.SCREW, WITH WASHER .TORNILLO CON VALONA	2	2	2			
12	6E0–81336–70	.GROMMET .TAPON PROTECTOR	1	1	1			
13	6E0–81328–70	.CLAMP .GRAMPA	1	1	1			
14	90159–04035	.SCREW, WITH WASHER .TORNILLO CON VALONA	1	1	1			
15	93102–20M25	OIL SEAL SELLO ACEITE	1	1	1			
16	93210–42159	O-RING ANILLO O	1	1	1			
17	97095–06016	BOLT PERNO	2	2	2			
18	92995–06100	WASHER, SPRING ARANDELA	2	2	2			
19	6E0–24183–00	DAMPER, LOCATING 3 AMORTIGUADOR DE MONTAJE 3	2	2				
20	90280–04M06	KEY, WOODRUFF CUNA WOODRUFF	1	1	1			
21	90170–10113	NUT TUERCA	1	1	1			
22	90201–10126	WASHER, PLATE ARANDELA PLANA	1	1	1			
23	6E0–81303–40	LIGHTING COIL ASSY BOBINA DE ILUMINACION COMPL.	1	1	1			AP 40W AP 40W
	6E0–81303–80	LIGHTING COIL ASSY BOBINA DE ILUMINACION COMPL.	1	1	1			AP 60W AP 60W
24	90159–05040	.SCREW, WITH WASHER .TORNILLO CON VALONA	2	2	2			

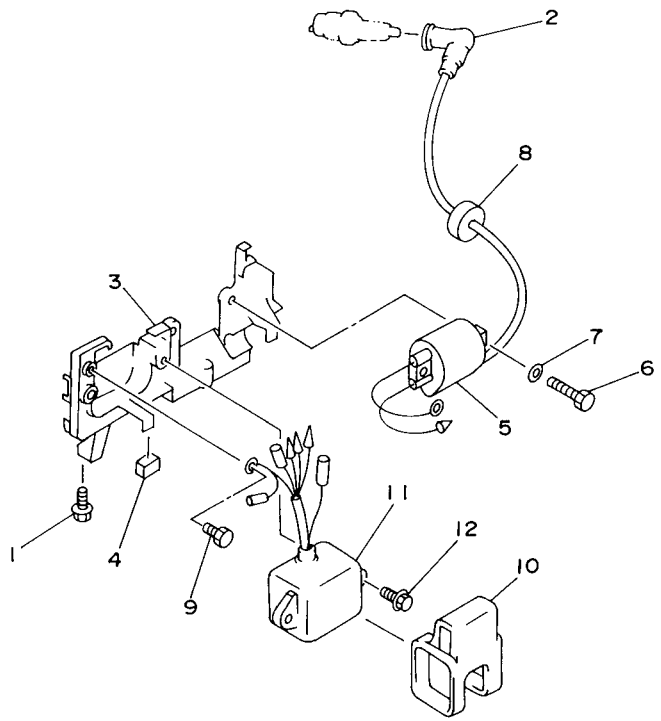

6E00010-6060

FIG. 6 ELECTRICAL ELECTRICO

REF. NO.	PART NO. CODIGO Nº	DESCRIPTION DESCRIPCION	6E0C	6E3C	6E4C			REMARKS OBSERVACIONES
1	95895–06016	BOLT, FLANGE TORNILLO DE REBORDE	2	2	2			
2	663–82370–01	PLUG CAP ASSY TAPON DE BUJIA COMPLT	1	1	1			
	6G1–82370–21	PLUG CAP ASSY TAPON DE BUJIA COMPLT	1					FOR CAR(CE) FOR CAR(CE)
	6E3–82370–21	PLUG CAP ASSY TAPON DE BUJIA COMPLT			1			FOR CAR(CE) FOR CAR(CE)
3	6E0–82316–01–94	BRACKET, IGNITION COIL SOPORTE BOBINA ENCENDIDO	1	1	1			
4	6E0–82317–00	DAMPER, IGNITION COIL AMORTIGUADOR BOBINA ENCENDIDO	2	2	2			
5	6E0–85570–00	IGNITION COIL ASSY BOBINA DE IGNICION COMPLETO	1	1	1			
6	97095–06016	BOLT PERNO	2	2	2			
7	92995–06600	WASHER ARANDELA	2	2	2			
8	90480–25161	GROMMET TAPON	1	1	1			
9	97080–06010	BOLT PERNO	1	1	1			
10	6E0–85548–00	HOLDER SOSTEN	1	1	1			
11	6E0–85540–71	C.D.I. UNIT ASSY UNIDAD C.D.I. COMPLETA	1	1	1			
12	95895–06020	BOLT, FLANGE TORNILLO DE REBORDE	2	2	2			

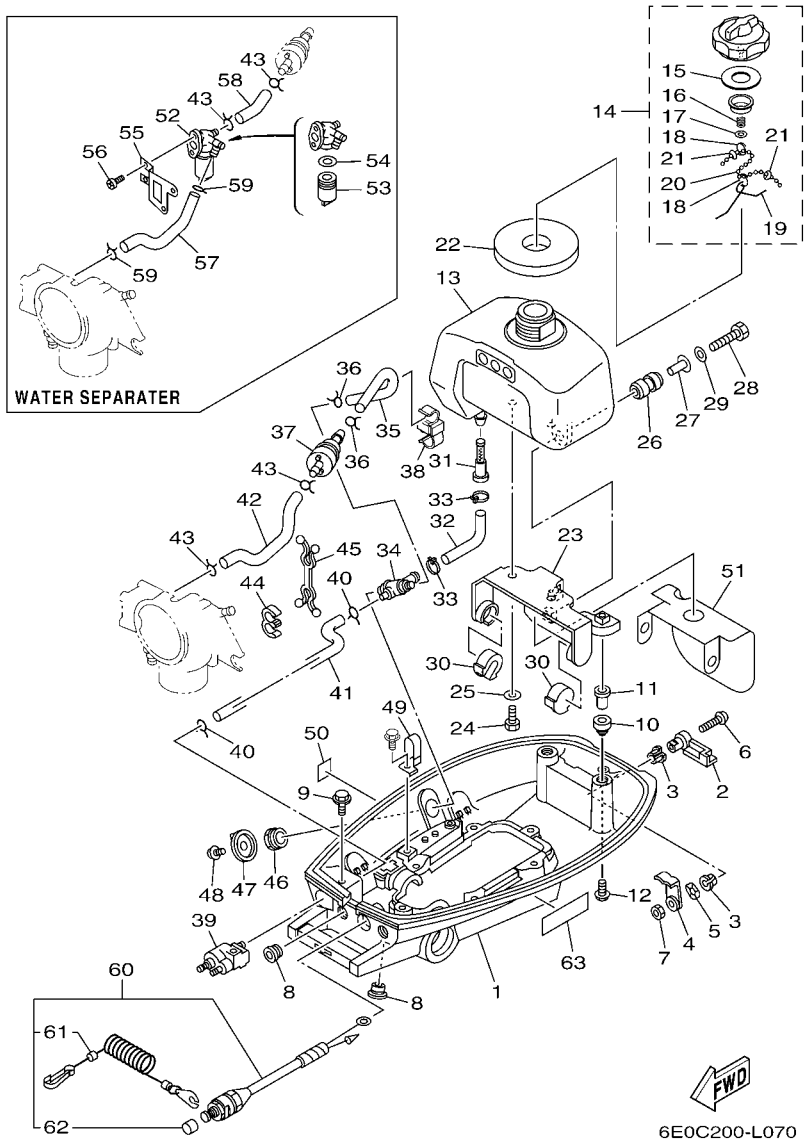

FIG. 7 BOTTOM COWLING 1 CUBIERTA INFERIOR 1

REF. NO.	PART NO. CODIGO Nº	DESCRIPTION DESCRIPCION	6E0C	6E3C	6E4C			REMARKS OBSERVACIONES
1	6E0–42711–10–4D	COWLING, BOTTOM 1 CUBIERTA INFERIOR 1	1	1				
2	6E0–42815–00–4D	LEVER, CLAMP PALANCA ABRAZADERA	1	1				
3	90386–12069	BUSH BUJE	2	2				
4	6E0–42816–00	LEVER, CLAMP PALANCA ABRAZADERA	1	1				
5	90206–12052	WASHER, WAVE ARANDELA ONDULADA	1	1				
6	97885–06030	SCREW, PAN HEAD TORNILLO A MUESCA	1	1				
7	95380–06700	NUT TUERCA	1	1				
8	90480–14M14	GROMMET TAPON	2	2				
9	95895–06020	BOLT, FLANGE TORNILLO DE REBORDE	1	1				
10	6E0–24182–00	DAMPER, LOCATING 2 AMORTIGUADOR DE MONTAJE 2	2					
	6E3–24182–00	DAMPER, LOCATING 2 AMORTIGUADOR DE MONTAJE 2		2				
11	6E0–42542–00	PIPE TUBO	2	2				
12	95895–06025	BOLT, FLANGE TORNILLO DE REBORDE	2	2				
13	6E3–24111–00	TANK, FUEL DEPOSITO DE COMBUSTIBLE	1	1				
14	68D–24610–10	CAP ASSY TAPA COMPLETA	1	1				
15	68D–24612–00	.PACKING, CAP .EMPAQUE DE TAPA	1	1				
16	90501–100A5	.SPRING, COMPRESSION .RESORTE DE COMPRESION	1	1				
17	92990–04200	.WASHER, PLAIN .ARANDELA PLANA	1	1				
18	90468–100A0	.CLIP .PRESILLA	2	2				
19	624–24634–00	.HOOK, CHAIN BALL .GANCHO	1	1				
20	69M–24633–00	.CHAIN, BALL .EMPAQUE	1	1				
21	67D–21757–00	.WASHER, SPECIAL 1 .ARANDELA ESPECIAL 1	2	2				
22	6E0–24641–20	GASKET, CAP 1 EMPAQUE DE TAPA 1	1					
	6E3–24641–10	GASKET, CAP 1 EMPAQUE DE TAPA 1		1				
23	6E3–24115–00	STAY, FUEL TANK 1 SOPORTE DEPOSITO DE COMBUST.1	1	1				
24	97095–06014	BOLT PERNO	2	2				
25	92995–06600	WASHER ARANDELA	2	2				

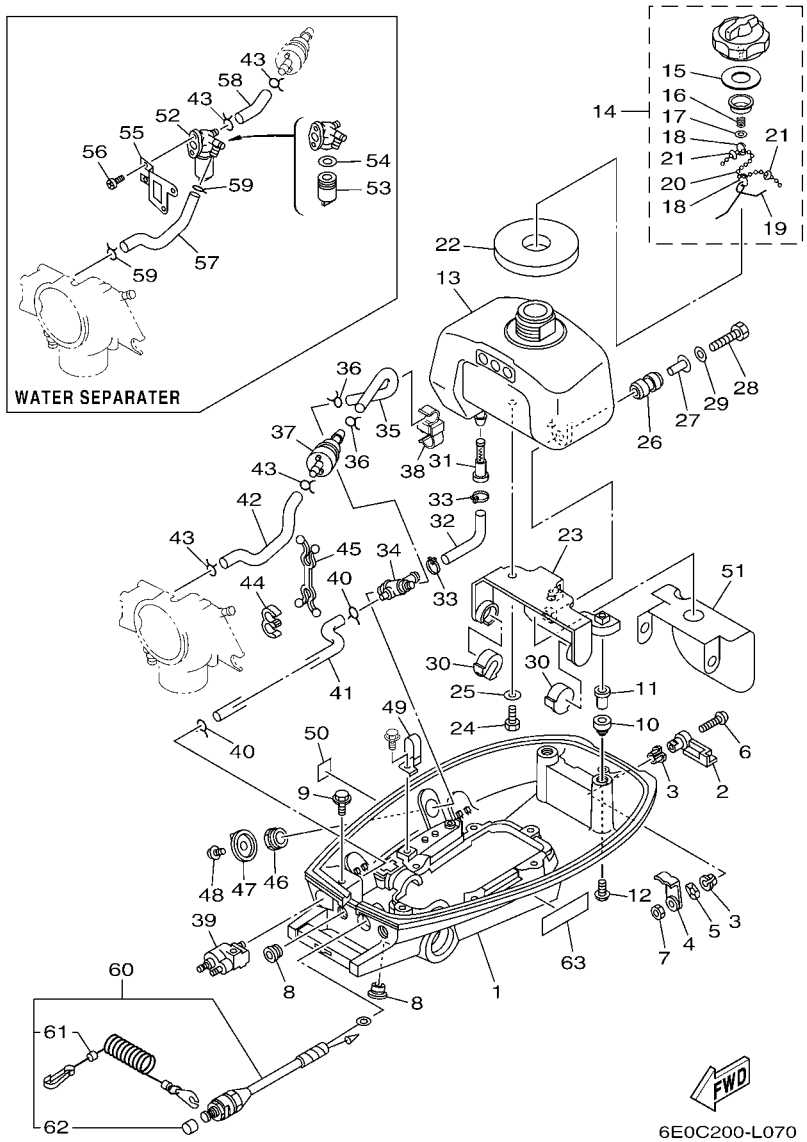

FIG. 7 BOTTOM COWLING 1 CUBIERTA INFERIOR 1

REF. NO.	PART NO. CODIGO Nº	DESCRIPTION DESCRIPCION	6E0C	6E3C	6E4C			REMARKS OBSERVACIONES
26	6A0–82317–00	DAMPER, IGNITION COIL AMORTIGUADOR BOBINA ENCENDIDO	1	1				
27	90387–06119	COLLAR ESPACIADOR	1	1				
28	97095–06025	BOLT PERNO	1	1				
29	92995–06600	WASHER ARANDELA	1	1				
30	6E0–24181–00	DAMPER, LOCATING 1 AMORTIGUADOR DE MONTAJE 1	2	2				
31	6L5–24251–00	STRAINER 1 COLADOR 1	1	1				
32	6E3–24311–00	PIPE, FUEL 1 TUBO DE COMBUSTIBLE 1	1	1				
33	90465–13M11	CLAMP BRIDA	2	2				
34	6E0–24500–10	FUEL COCK ASSY 1 GRIFO DE COMBUSTIBLE 1	1	1				
35	6E3–24314–00	PIPE 4 TUBO 4	1	1				
36	90467–08004	CLIP PRESILLA	2	2				
37	68T–24251–01	STRAINER 1 COLADOR 1	1	1				
38	90464–12010	CLAMP BRIDA	1	1				
39	6G1–24304–02	FUEL PIPE JOINT COMP. 1 CONECTOR MANGUERA COMBUST.1	1	1				
40	90467–08004	CLIP PRESILLA	2	2				
41	6E3–24313–00	PIPE 3 TUBO 3	1	1				
42	6E3–24315–00	PIPE 5 TUBO DE DESAGUE	1					FOR CAR,CAR(CE) FOR CAR,CAR(CE)
43	90467–08004	CLIP PRESILLA	2	2				
44	90464–09M21	CLAMP BRIDA	1	1				
45	90464–10M53	CLAMP BRIDA	1					FOR CAR,CAR(CE) FOR CAR,CAR(CE)
46	90170–16M35	NUT TUERCA	1	1				
47	6J1–24524–00	LEVER, COCK LLAVE DEL GRIFO	1	1				
48	97980–04210	SCREW, WITH WASHER TORNILLO, CON ARANDELA	1	1				
49	90465–08M62	CLAMP BRIDA	1	1				
50	6E0–24591–10	EMBLEM, FUEL COCK CALCAMONIA PALANCA DE CAMBIO	1	1				
51	6E3–24217–00	COVER CUBIERTA	1	1				
52	6E0–24500–61	FUEL COCK ASSY 1 GRIFO DE COMBUSTIBLE 1	1	1				WATER SEPARATER WATER SEPARATER

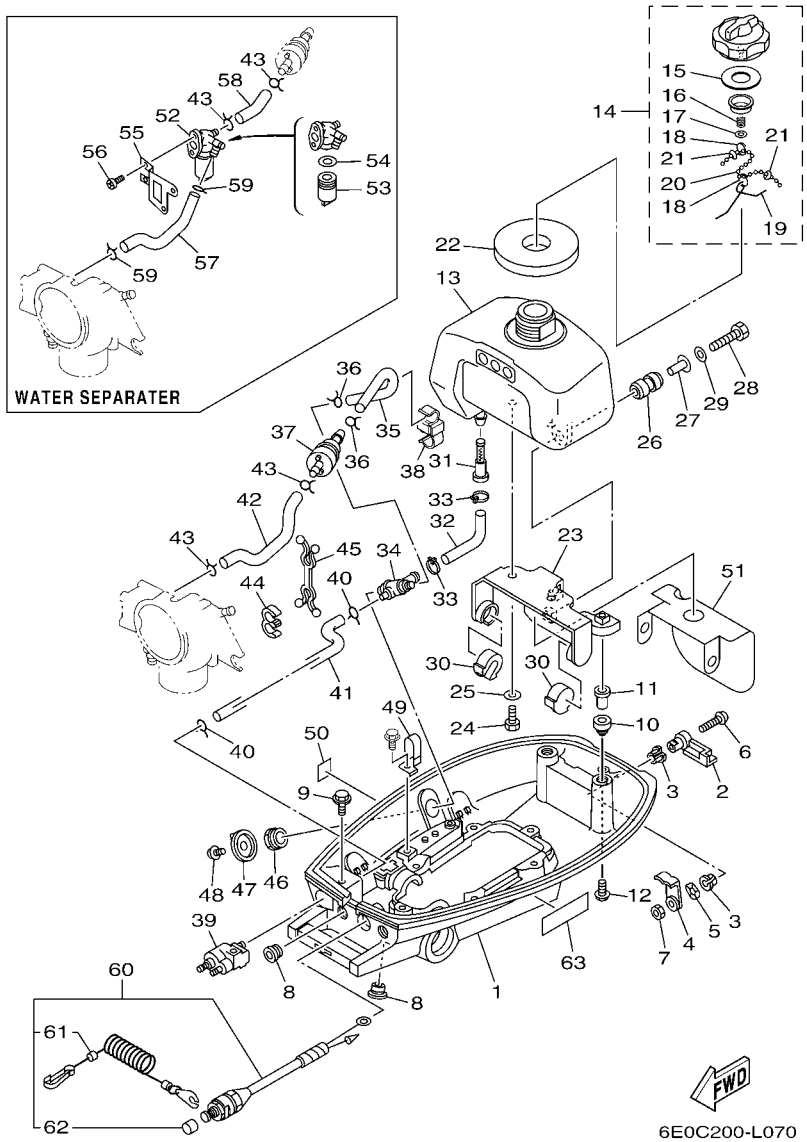

FIG. 7 BOTTOM COWLING 1 CUBIERTA INFERIOR 1

REF. NO.	PART NO. CODIGO Nº	DESCRIPTION DESCRIPCION	6E0C	6E3C	6E4C			REMARKS OBSERVACIONES
53	624–24521–02	.CUP, FILTER .COPA DE FILTRO	1	1				
54	102–24522–01	.GASKET .EMPAQUE	1	1				
55	6E0–24566–61	BRACKET, FILTER SOPORTE DEL FILTRO	1					WATER SEPARATER WATER SEPARATER
	6E3–24566–61	BRACKET, FILTER SOPORTE DEL FILTRO		1				WATER SEPARATER WATER SEPARATER
56	97885–04010	SCREW, PAN HEAD TORNILLO A MUESCA	2	2				WATER SEPARATER WATER SEPARATER
57	6E3–24316–00	PIPE 6 TUBO 6	1	1				WATER SEPARATER WATER SEPARATER
58	90445–09003	HOSE (L30) TUBO (L30)	1	1				WATER SEPARATER WATER SEPARATER
59	90467–08004	CLIP PRESILLA	2	2				WATER SEPARATER WATER SEPARATER
60	6E0–82575–00	ENGINE STOP SWITCH ASSY INTERRUPTOR DE PARADA COMPL	1	1				
61	682–82556–00	.LANYARD, STOP SWITCH .CORDON DE INTERRUPTOR PARADA	1	1				
62	689–8257Y–00	.CAP .TAPA	1	1				
63	6AH–81994–40	LABEL, SAFETY ETIQUETA DE SEGURIDAD	1	1				

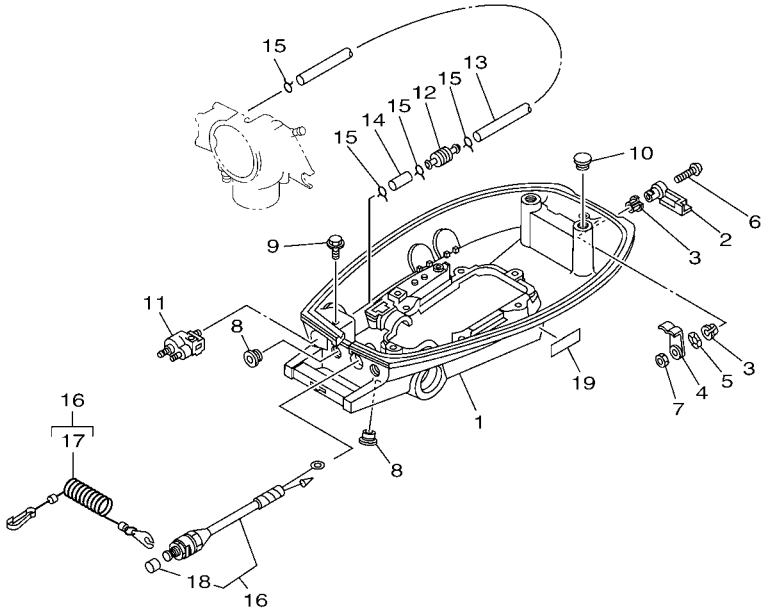

6E0B200-L080

FIG. 8 BOTTOM COWLING 2 CUBIERTA INFERIOR 2

REF. NO.	PART NO. CODIGO Nº	DESCRIPTION DESCRIPCION	6E0C	6E3C	6E4C			REMARKS OBSERVACIONES
1	6E0–42711–05–4D	COWLING, BOTTOM 1 CUBIERTA INFERIOR 1			1			
2	6E0–42815–00–4D	LEVER, CLAMP PALANCA ABRAZADERA			1			
3	90386–12069	BUSH BUJE			2			
4	6E0–42816–00	LEVER, CLAMP PALANCA ABRAZADERA			1			
5	90206–12052	WASHER, WAVE ARANDELA ONDULADA			1			
6	97885–06030	SCREW, PAN HEAD TORNILLO A MUESCA			1			
7	95380–06700	NUT TUERCA			1			
8	90480–14M14	GROMMET TAPON			2			
9	95895–06020	BOLT, FLANGE TORNILLO DE REBORDE			1			
10	6E1–24182–00	DAMPER, LOCATING 2 AMORTIGUADOR DE MONTAJE 2			2			
11	6G1–24304–02	FUEL PIPE JOINT COMP. 1 CONECTOR MANGUERA COMBUST.1			1			
12	646–24251–02	STRAINER 1 COLADOR 1			1			
13	688–24313–00	PIPE 3 TUBO 3			1			
14	90445–09057	HOSE (L43) TUBO (L43)			1			
15	90467–08004	CLIP PRESILLA			4			
16	6E0–82575–00	ENGINE STOP SWITCH ASSY INTERRUPTOR DE PARADA COMPL			1			
17	682–82556–00	.LANYARD, STOP SWITCH .CORDON DE INTERRUPTOR PARADA			1			
18	689–8257Y–00	.CAP .TAPA			1			
19	6AH–81994–40	LABEL, SAFETY ETIQUETA DE SEGURIDAD			1			

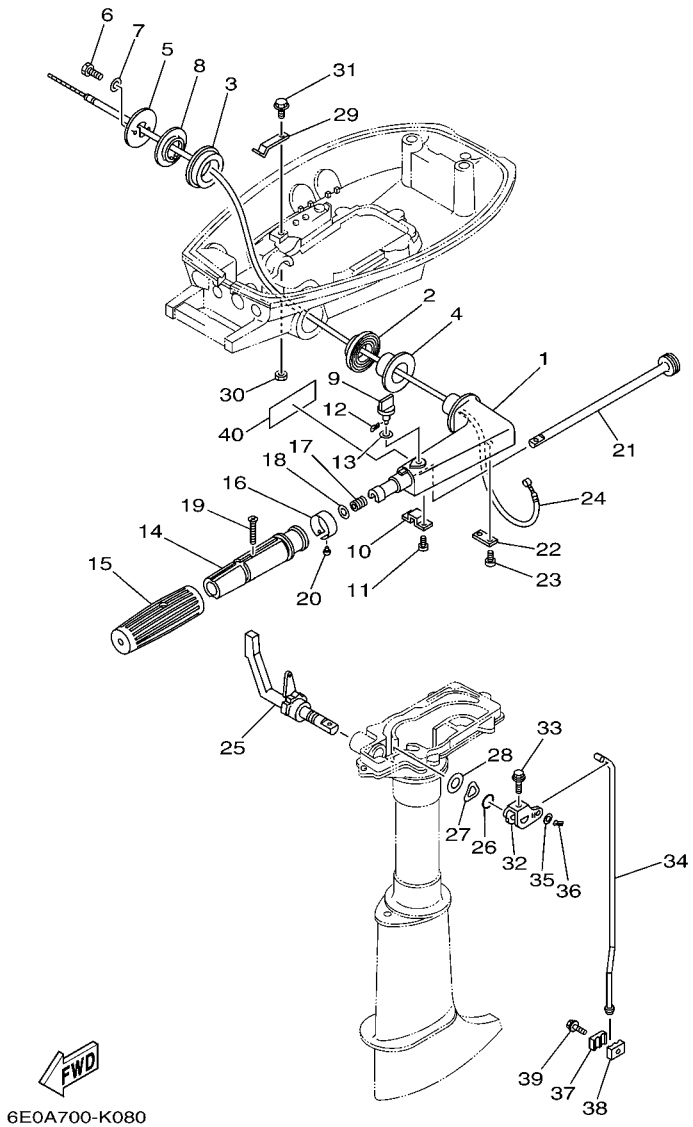

6E0A700-K080

FIG. 9 CONTROL — CONTROL

REF. NO.	PART NO. CODIGO Nº	DESCRIPTION DESCRIPCION	6E0C	6E3C	6E4C			REMARKS OBSERVACIONES
1	6E0–42111–02–4D	HANDLE, STEERING MANIJA DE DIRECCION	1	1	1			
2	6E0–42129–02	BUSHING, RUBBER BUJE 1	1	1	1			
3	6E4–42129–00	BUSHING, RUBBER BUJE 1	1	1	1			
4	90386–26M30	BUSH BUJE	1	1	1			
5	6E0–42131–02–94	COVER, HANDLE STEERING CUBIERTA MANIJA DIRRECCION	1	1	1			
6	97013–05020	BOLT PERNO	2	2	2			
7	92903–05600	WASHER, PLATE RONDANA SENCILLA	2	2	2			
8	90386–26M33	BUSH BUJE	1	1	1			
9	6E0–42125–00	BOLT, FRICTION ADJUSTING TORNILLO FRICCION ADJUSTA	1	1	1			
10	6E0–42134–02	COVER, THROTTLE LEVER CUBIERTA PALANCA ACELERADOR	1	1	1			
11	97885–05012	SCREW, PAN HEAD TORNILLO A MUESCA	2	2	2			
12	91490–12010	PIN. COTTER CHAVETA	1	1	1			
13	90202–07M22	WASHER, PLATE ARANDELA DE PLANA	1	1	1			
14	6E0–42119–00	GRIP, STEERING HANDLE MANGO, MANIJA DE DIRRECCION	1	1	1			
15	6E0–42177–00	RUBBER, HANDLE HULE DE MANIJA	1	1	1			
16	6E0–42137–10	INDICATOR, THROTTLE INDICADOR ACELERADOR	1	1	1			
17	90501–23215	SPRING, COMPRESSION RESORTE DE COMPRESION	1	1	1			
18	90201–10119	WASHER, PLATE ARANDELA PLANA	1	1	1			
19	90152–05011	SCREW, COUNTERSUNK TORNILLO EMBUTIDO	1	1	1			
20	90269–02M09	RIVET REMACHE	1	1	1			
21	6E0–42138–01	LEVER, THROTTLE PLANCA DE ACELERACION	1	1	1			
22	6E0–42159–02	STAY SOPORTE	1	1	1			
23	97885–05012	SCREW, PAN HEAD TORNILLO A MUESCA	2	2	2			
24	6E0–26301–01	THROTTLE CABLE ASSY CABLE DE ACELERADOR COMPLETO	1	1	1			
25	6E4–44111–72–4D	HANDLE, GEAR SHIFT MANIJA DE CAMBIO DE MARCHAS	1	1	1			
26	93210–12327	O-RING ANILLO O	1	1	1			
27	90206–16M06	WASHER, WAVE ARANDELA ONDULADA	1	1	1			

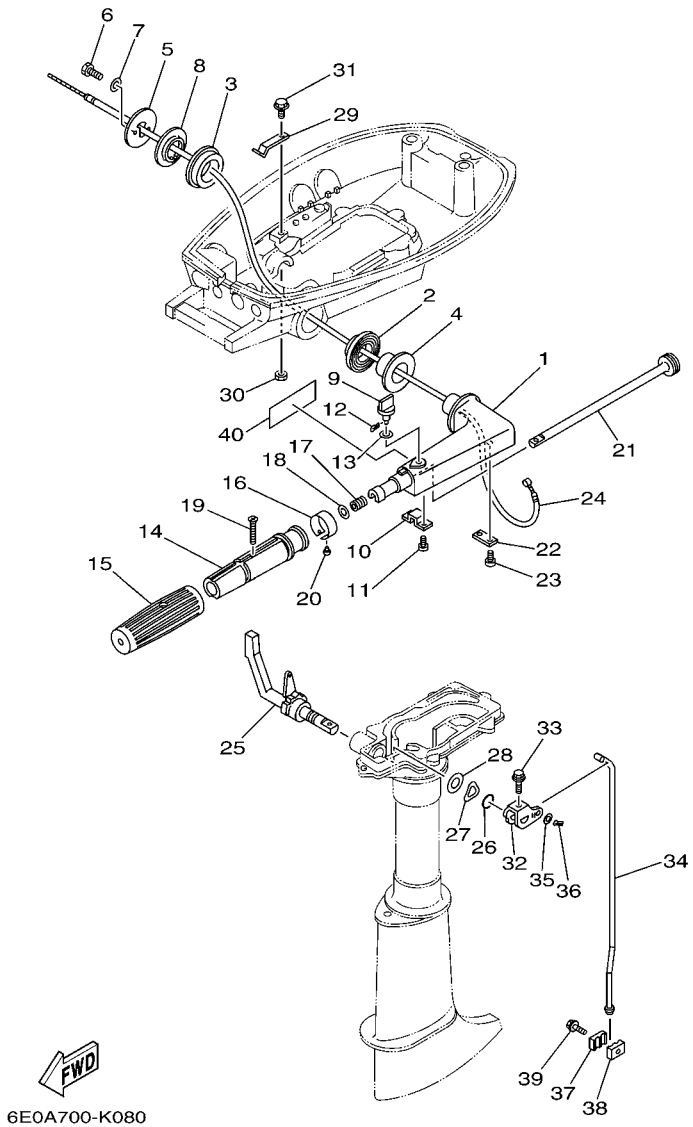

FIG. 9 CONTROL — CONTROL

REF. NO.	PART NO. CODIGO Nº	DESCRIPTION DESCRIPCION	6E0C	6E3C	6E4C			REMARKS OBSERVACIONES
28	90202–16061	WASHER, PLATE ARANDELA DE PLANA	1	1	1			
29	6E0–44116–00	SPRING RESORTE	1	1	1			
30	95380–06700	NUT TUERCA	1	1	1			
31	95895–06012	BOLT, FLANGE TORNILLO DE REBORDE	1	1	1			
32	6E0–44121–00	LEVER, SHIFT ROD PALANCA VARILLA CAMBIOS	1	1	1			
33	95895–06025	BOLT, FLANGE TORNILLO DE REBORDE	1	1	1			
34	6E0–44143–00	ROD, SHIFT VARILLA DE CAMBIO	1	1	1			S(17.5") S(17.5")
	6E0–44143–10	ROD, SHIFT VARILLA DE CAMBIO	1	1	1			L(22.5") L(22.5")
35	92990–05600	WASHER, PLATE ARANDELA PLANA	1	1	1			
36	91490–16010	PIN. COTTER CHAVETA	1	1	1			
37	6E0–44145–00	CONNECTOR, SHIFT ROD CONECTOR, VARILLA CAMBIO	1	1	1			
38	6E0–44146–00	CONNECTOR, SHIFT ROD CONECTOR VARILLA DE CAMBIO	1	1	1			
39	95895–06020	BOLT, FLANGE TORNILLO DE REBORDE	1	1	1			
40	6AH–42794–40	LABEL, WARNING (GENERAL) ETIQUETA DE PRECAUCION	1	1	1			

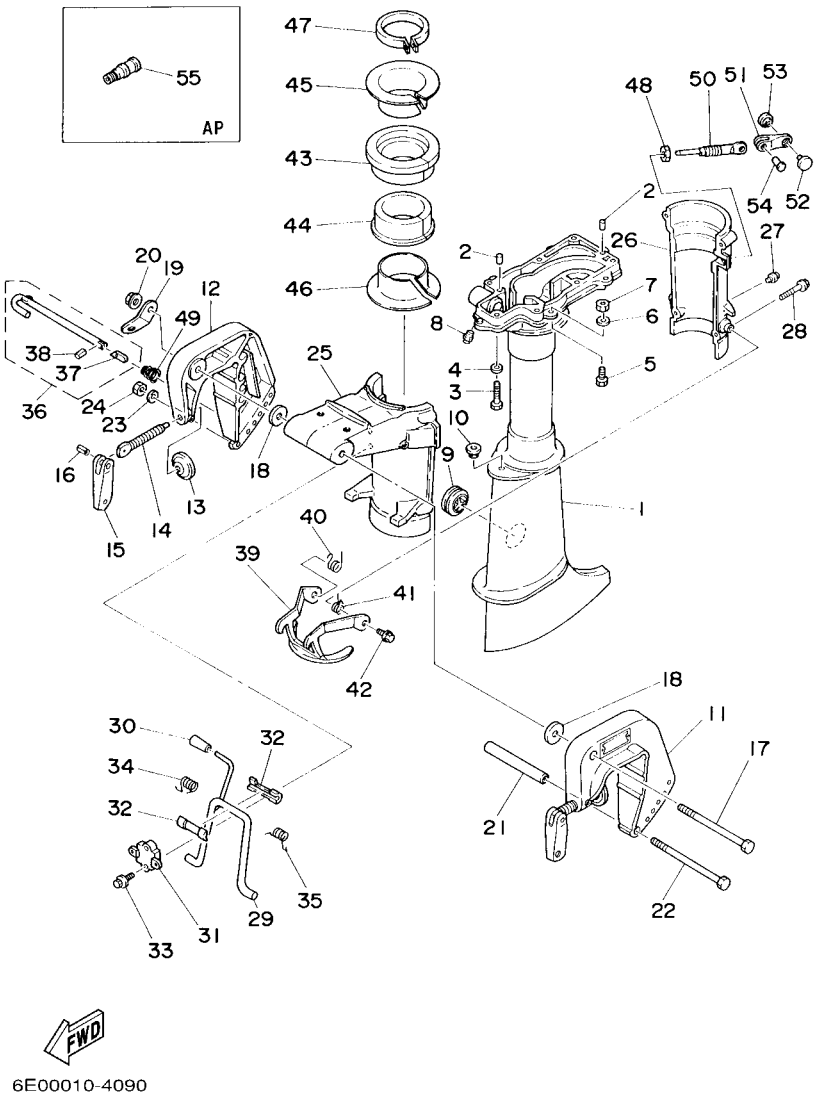

FIG. 10 UPPER CASING & BRACKET CUBIERTA SUPERIOR Y SOPORTE

REF. NO.	PART NO. CODIGO Nº	DESCRIPTION DESCRIPCION	6E0C	6E3C	6E4C			REMARKS OBSERVACIONES
1	6E0–45111–02–4D	CASING, UPPER CAJA SUPERIOR	1	1	1			S(17.5") S(17.5")
	6E0–45111–12–4D	CASING, UPPER CAJA SUPERIOR	1	1	1			L(22.5") L(22.5")
2	93606–12019	PIN, DOWEL PASADOR DE CLAVIJA	2	2	2			
3	97095–06030	BOLT PERNO	7	7	7			
4	92995–06600	WASHER ARANDELA	7	7	7			
5	97095–06016	BOLT PERNO	4	4	4			
6	92995–06600	WASHER ARANDELA	4	4	4			
7	95380–06700	NUT TUERCA	4	4	4			
8	93700–06M03	NIPPLE, GREASE BOQUILLA DE ENGRASAR	1	1	1			
9	647–45151–01	COVER, UPPER CASING CUBIERTA FUNDA SUPERIOR	1	1	1			
10	90480–10M13	GROMMET TAPON	1	1	1			
11	6E0–43111–02–4D	BRACKET, CLAMP 1 SOPORTE DE LA ABRAZADERA 1	1	1	1			
12	6E0–43112–01–4D	BRACKET, CLAMP 2 SOPORTE DE LA ABRAZADERA 2	1	1	1			
13	620–43114–00	PAD, TRANSOM CLAMP ARANDELA DE ABRAZADERA	2	2	2			
14	6E0–43116–01	SCREW, TRANSOM CLAMP TORNILLO DE ABRAZADERA	2	2	2			
15	6E0–43118–01	HANDLE, TRANSOM CLAMP MANIJA DE LA ABRAZADERA DEL ES	2	2	2			
16	90243–04M01	PIN PASADOR	2	2	2			
17	90101–08M07	BOLT TORNILLO	1	1	1			
18	90201–08M03	WASHER, PLATE ARANDELA PLANA	2	2	2			
19	6A1–43113–01	PLATE, CLAMP BRACKET PLACA ABRAZADERA SOPORTE	1	1	1			
20	90185–08057	NUT, SELF-LOCKING TUERCA AUTOBLOCANTE	1	1	1			
21	90387–06M11	COLLAR ESPACIADOR	1	1	1			
22	90101–06335	BOLT TORNILLO	1	1	1			
23	92990–06600	WASHER, PLATE ARANDELA PLANA	1	1	1			
24	95380–06600	NUT, HEXAGON TUERCA	1	1	1			
25	6E0–43311–04–4D	BRACKET, SWIVEL 1 SOPORTE GIRATORIO 1	1	1	1			
26	6E0–43312–02–4D	BRACKET, SWIVEL 2 SOPORTE GIRATORIO 2	1	1	1			

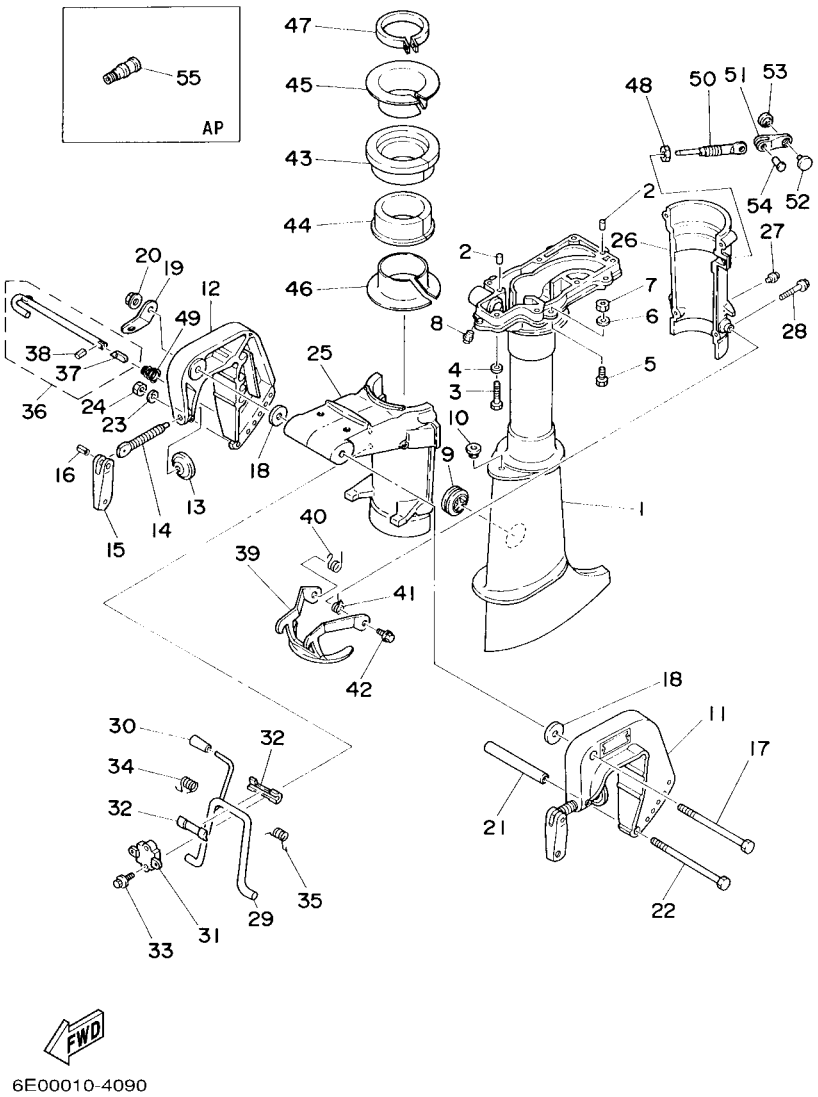

6E00010-4090

FIG. 10 UPPER CASING & BRACKET CUBIERTA SUPERIOR Y SOPORTE

REF. NO.	PART NO. CODIGO Nº	DESCRIPTION DESCRIPCION	6E0C	6E3C	6E4C			REMARKS OBSERVACIONES
27	93700–06M03	NIPPLE, GREASE BOQUILLA DE ENGRASAR	1	1	1			
28	95895–06035	BOLT, FLANGE TORNILLO DE REBORDE	4	4	4			
29	6E0–43181–00	LEVER, TILT STOP 1 PALANCA TOPE INCLINACION 1	1	1	1			
30	6E0–43632–00	KNOB, TILT PERILLA INCLINADOR	1	1	1			
31	6E0–43313–00–94	BRACKET, SWIVEL 3 SOPORTE GIRATORIO 3	1	1	1			
32	620–43189–00	BUSHING BUJE	2	2	2			
33	95895–06020	BOLT, FLANGE TORNILLO DE REBORDE	2	2	2			
34	90508–16020	SPRING, TORSION RESORTE DE TORSION	1	1	1			
35	90508–16021	SPRING, TORSION RESORTE DE TORSION	1	1	1			
36	6E0–43160–01	TILT ROD ASSY VARILLA DE BASCULACION COMPL.	1	1	1			
37	689–43165–00	.PLATE, TILT LOCK .PLACA DE TOPE, VARILLA SEGURID	1	1	1			
38	91690–30008	.PIN, SPRING .PASADOR DE RESORTE	1	1	1			
39	6E0–43614–00–CA	PLATE, TILT LOCK PLACA DE SEGURO DE INCLINACION	1	1	1			
40	90508–14M10	SPRING, TORSION RESORTE DE TORSION	1	1	1			
41	90508–14M11	SPRING, TORSION RESORTE DE TORSION	1	1	1			
42	95895–06010	BOLT, FLANGE TORNILLO DE REBORDE	2	2	2			
43	6E0–42537–02	BUSHING, PIVOT SHAFT BUJE DEL PIVOTE DE LA FLECHA	1	1	1			
44	6E0–42538–02	BUSHING, PIVOT SHAFT BUJE DEL PIVOTE DE LA FLECHA	1	1	1			
45	6E0–42539–00	BUSHING, PIVOT SHAFT BUJE DEL PIVOTE DE LA FLECHA	1	1	1			
46	6E0–42549–00	BUSHING, PIVOT SHAFT BUJEDEL PIVOTE DE LA FLECHA	1	1	1			
47	6E0–42528–03	PLATE, FRICTION PIEZA DE FRICCION	1	1	1			
48	95380–08600	NUT TUERCA	1	1	1			
49	90502–08M05	SPRING, CONICAL RESORTE CONICO	1	1	1			
50	6L5–42529–01	SCREW, FRICTION PIECE TORNILLO PIEZA FRICCION	1	1	1			
51	6L5–42561–00	KNOB, STEERING LOCK PERILLA	1	1	1			
52	6L5–44196–00	INDICATOR 3 INDICADOR 3	1	1	1			
53	6L5–44197–00	INDICATOR 4 INDICADOR 4	1	1	1			

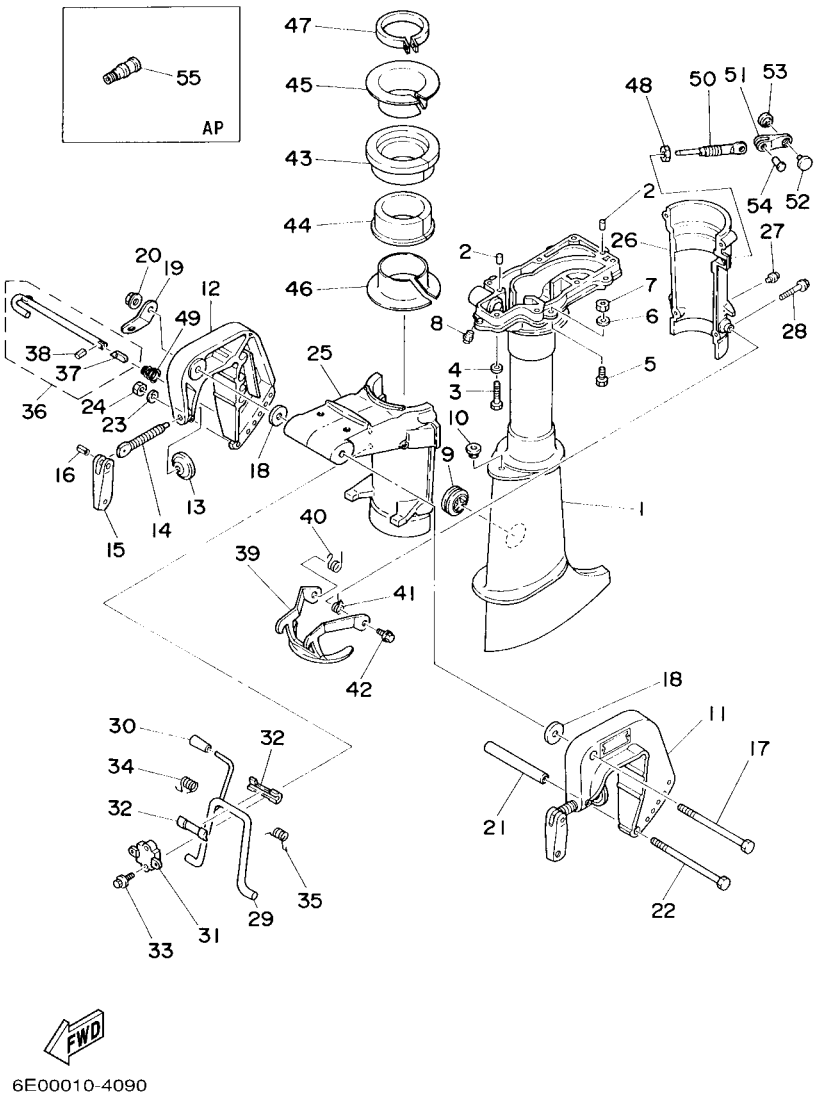

6E00010-4090

FIG. 10 UPPER CASING & BRACKET CUBIERTA SUPERIOR Y SOPORTE

REF. NO.	PART NO. CODIGO Nº	DESCRIPTION DESCRIPCION	6E0C	6E3C	6E4C			REMARKS OBSERVACIONES
54	90266–04M05	RIVET REMACHE	1	1	1			
55	626–28193–01–94	PLUG, WATER CHECK TAPON DE CONTROL DE LA AGUA	1	1	1			AP D:15MM AP D:15MM

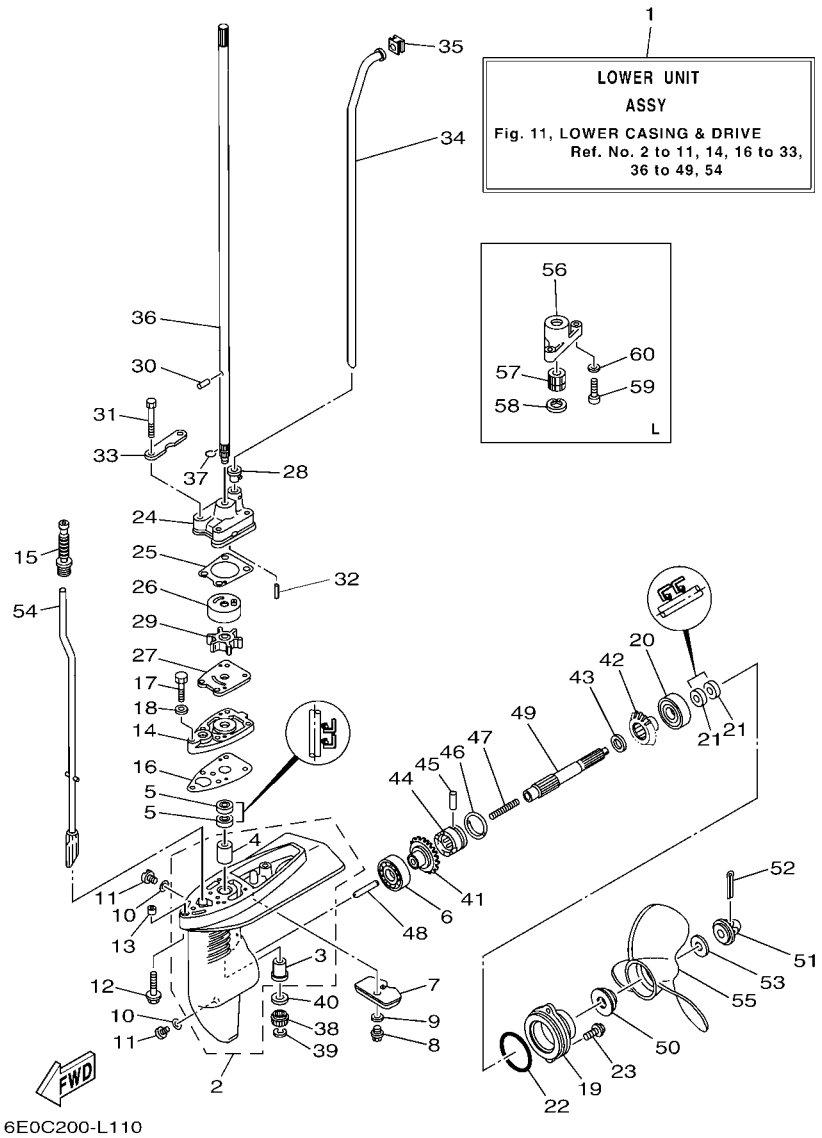

FIG. 11 LOWER CASING & DRIVE IMPULSOR E INFERIOR

REF. NO.	PART NO. CODIGO Nº	DESCRIPTION DESCRIPCION	6E0C	6E3C	6E4C			REMARKS OBSERVACIONES
1	6E0–45300–03–4D	LOWER UNIT ASSY CONJUNTO UNIDAD INFERIOR	1	1	1			S(17.5") S(17.5")
	6E0–45300–13–4D	LOWER UNIT ASSY CONJUNTO UNIDAD INFERIOR	1	1	1			L(22.5") L(22.5")
2	6E0–45311–02–4D	CASING, LOWER FUNDA INFERIOR	1	1	1			
3	6E0–45317–09	.BUSHING, DRIVE SHAFT .BUJE	1	1	1			
4	6E0–45316–09	.BUSHING, DRIVE SHAFT .BUJE, EJE DE MANDO	1	1	1			
5	93101–10M14	OIL SEAL SELLO ACEITE	2	2	2			
6	93306–004U0	BEARING COJINETE	1	1	1			
7	6L5–45251–03	ANODE CATODE	1	1	1			
8	95895–06012	BOLT, FLANGE TORNILLO DE REBORDE	1	1	1			
9	92990–06300	WASHER, INTERNAL TOOTH ARANDELA PLANA	1	1	1			
10	90430–08020	GASKET JUNTA	3	3	3			
11	90340–08002	PLUG, STRAIGHT SCREW TORNILLO, DE DRENAJE	3	3	3			
12	90119–06M40	BOLT, WITH WASHER TORNILLO CON ARANDELA	2	2	2			
13	90387–06M14	COLLAR ESPACIADOR	2	2	2			
14	6E0–45321–01–CA	PLATE PLACA	1	1	1			
15	6G1–44147–00	BOOT, SHIFT ROD HULE DE VARILLA	1	1	1			
16	6E0–45315–A0	PACKING, LOWER CASING EMPAQUE	1	1	1			
17	97095–06025	BOLT PERNO	1	1	1			
18	92995–06600	WASHER ARANDELA	1	1	1			
19	6E0–45361–01–4D	CAP, LOWER CASING FUNDA INFERIOR	1	1	1			
20	93306–004U0	BEARING COJINETE	1	1	1			
21	93101–13M12	OIL SEAL SELLO ACEITE	2	2	2			
22	93210–48214	O-RING ANILLO O	1	1	1			
23	95895–06016	BOLT, FLANGE TORNILLO DE REBORDE	2	2	2			
24	6E0–44311–00	HOUSING, WATER PUMP CAJA BOMBA DE AGUA	1	1	1			
25	6E0–44315–A0	GASKET, WATER PUMP EMPAQUE	1	1	1			
26	6E0–44322–02	INSERT, CARTRIDGE CARTUCHO	1	1	1			

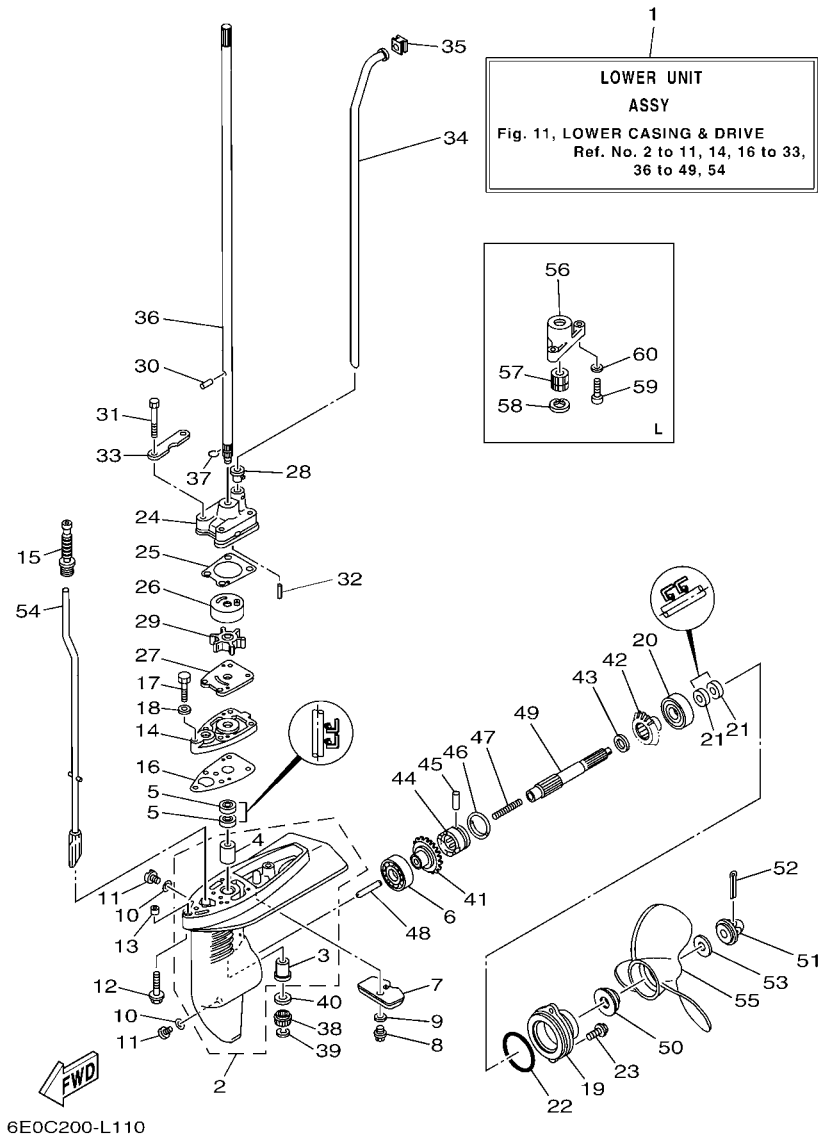

FIG. 11 LOWER CASING & DRIVE IMPULSOR E INFERIOR

REF. NO.	PART NO. CODIGO Nº	DESCRIPTION DESCRIPCION	6E0C	6E3C	6E4C			REMARKS OBSERVACIONES
26	6E0–44322–40	INSERT, CARTRIDGE CARTUCHO		1				FOR CHN FOR CHN
27	6E0–44323–00	OUTER PLATE, CARTRIDGE PLACA EXTERIOR DEL CARTUCHO	1	1	1			
	6E0–44323–40	OUTER PLATE, CARTRIDGE PLACA EXTERIOR DEL CARTUCHO		1				FOR CHN FOR CHN
28	6E0–44366–00	DAMPER, WATER SEAL 2 GOMA DEL SELLO DE AGUA 2	1	1	1			
29	6E0–44352–00	IMPELLER IMPULSOR	1	1	1			
30	93604–09066	PIN, DOWEL PASADOR DE CLAVIJA	1	1	1			
31	97095–06045	BOLT PERNO	4	4	4			
32	93604–18080	PIN, DOWEL PASADOR DE CLAVIJA	2	2	2			
33	6E0–44328–00	PLATE PLACA	2	2	2			
34	6E0–44361–00	TUBE, WATER 1 TUBO DE AGUA 1	1	1	1			S(17.5") S(17.5")
	6E0–44361–10	TUBE, WATER 1 TUBO DE AGUA 1	1	1	1			L(22.5") L(22.5")
35	646–44365–00	DAMPER, WATER SEAL 1 HULE DE SELLO DE AGUA 1	1	1	1			
36	6E0–45511–01	SHAFT, DRIVE EJE DE MANDO	1	1	1			S(17.5") S(17.5")
	6E0–45511–11	SHAFT, DRIVE EJE DE MANDO	1	1	1			L(22.5") L(22.5")
37	90467–08M01	CLIP PRESILLA	1	1	1			
38	6E0–45551–00	PINION (13T) PINON (13T)	1	1	1			
39	99001–06600	CIRCLIP PRESILLA REDONDA	1	1	1			
40	90201–11M49	WASHER, PLATE ARANDELA PLANA	1	1	1			
41	6E0–45560–00	GEAR 1 (27T) ENGRANAJE 1 (27T)	1	1	1			
42	6E0–45570–00	GEAR 2 (27T) ENGRANAJE 2 (27T)	1	1	1			
43	90201–13M50	WASHER, PLATE ARANDELA PLANA	1	1	1			
44	6E0–45631–00	CLUTCH, DOG EMBRAGUE DE GARRA	1	1	1			
45	90250–05046	PIN, STRAIGHT PASADOR CILINDRICO	1	1	1			
46	654–45633–00	RING, CROSS PIN ANILLO DE PASADOR	1	1	1			
47	90501–10064	SPRING, COMPRESSION RESORTE DE COMPRESION	1	1	1			
48	654–45635–00	PLUNGER, SHIFT EMBOLO DE CAMBIO	1	1	1			
49	6E0–45611–01	SHAFT, PROPELLER EJE PROPUSOR	1	1	1			

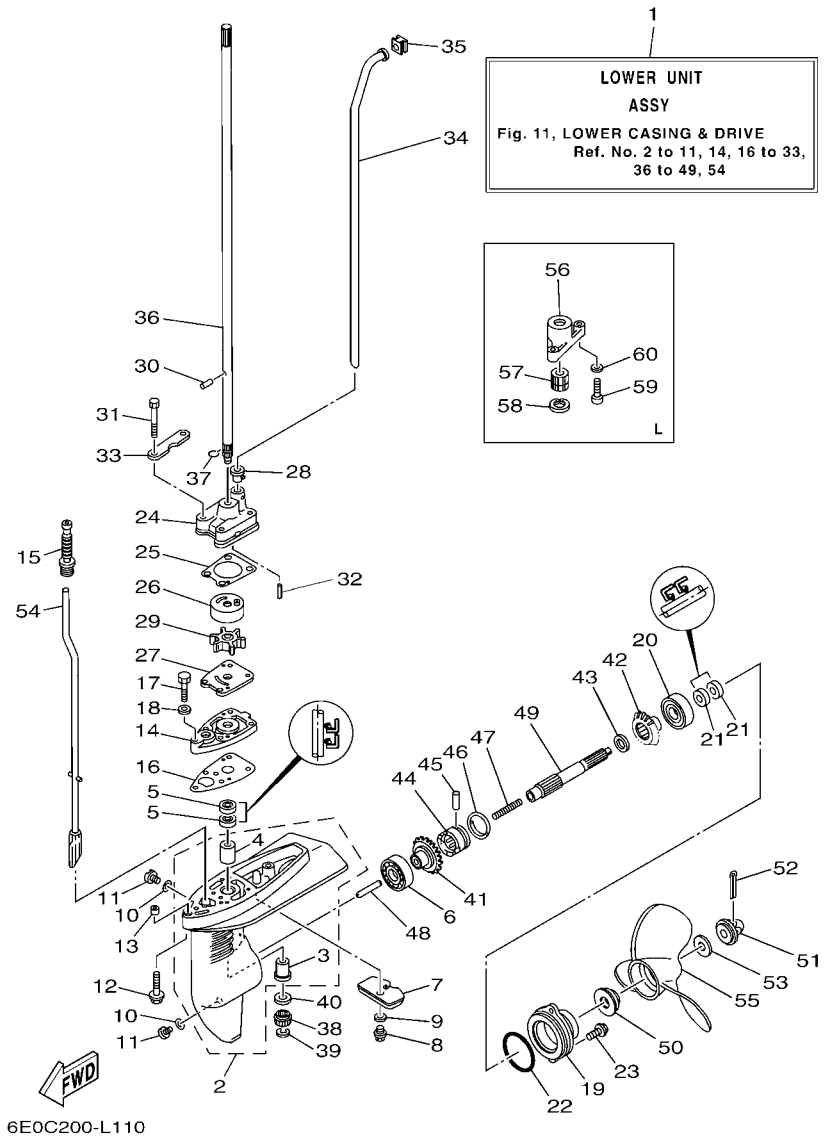

FIG. 11 LOWER CASING & DRIVE IMPULSOR E INFERIOR

REF. NO.	PART NO. CODIGO Nº	DESCRIPTION DESCRIPCION	6E0C	6E3C	6E4C			REMARKS OBSERVACIONES
50	6L5–45987–01	SPACER 1 ESPACIADOR 1	1	1	1			
51	6L5–45616–00	NUT, PROPELLER TUERCA DE HELICE	1	1	1			
52	91490–25030	PIN. COTTER CHAVETA	1	1	1			
53	90201–08M54	WASHER, PLATE ARANDELA PLANA	1	1	1			
54	6E0–44150–00	SHIFT CAM ASSY CONJUNTO EJE LEVA COMPL.	1	1	1			S(17.5") S(17.5")
	6E0–44150–10	SHIFT CAM ASSY CONJUNTO EJE LEVA COMPL.	1	1	1			L(22.5") L(22.5")
55	6E0–45941–01	PROPELLER (3X7-1/2"X8"-BA) PROPELA (3X7-1/2"X8"-BA)	1	1	1			UR UR
	6E0–45943–01	PROPELLER (3X7-1/2"X7"-BA) PROPELA (3X7-1/2"X7"-BA)	1	1	1			UR UR
	6E0–45949–00	PROPELLER (3X7-1/4"X6-1/2"-BA) PROPELA (3X7-1/4"X6-1/2"-BA)	1	1	1			UR UR
56	6E0–45331–00–CA	HOUSING, BEARING CAJA DE COJINETE	1	1	1			L(22.5") L(22.5")
57	6E0–45318–01	BUSHING, DRIVE SHAFT BUJE, EJE DE MANDO	1	1	1			L(22.5") L(22.5")
58	93420–22M03	CIRCLIP SEGURO	1	1	1			L(22.5") L(22.5")
59	97880–05025	SCREW, PAN HEAD TORNILLO DE CABEZA CON PLANA	2	2	2			L(22.5") L(22.5")
60	92990–05600	WASHER, PLATE ARANDELA PLANA	2	2	2			L(22.5") L(22.5")

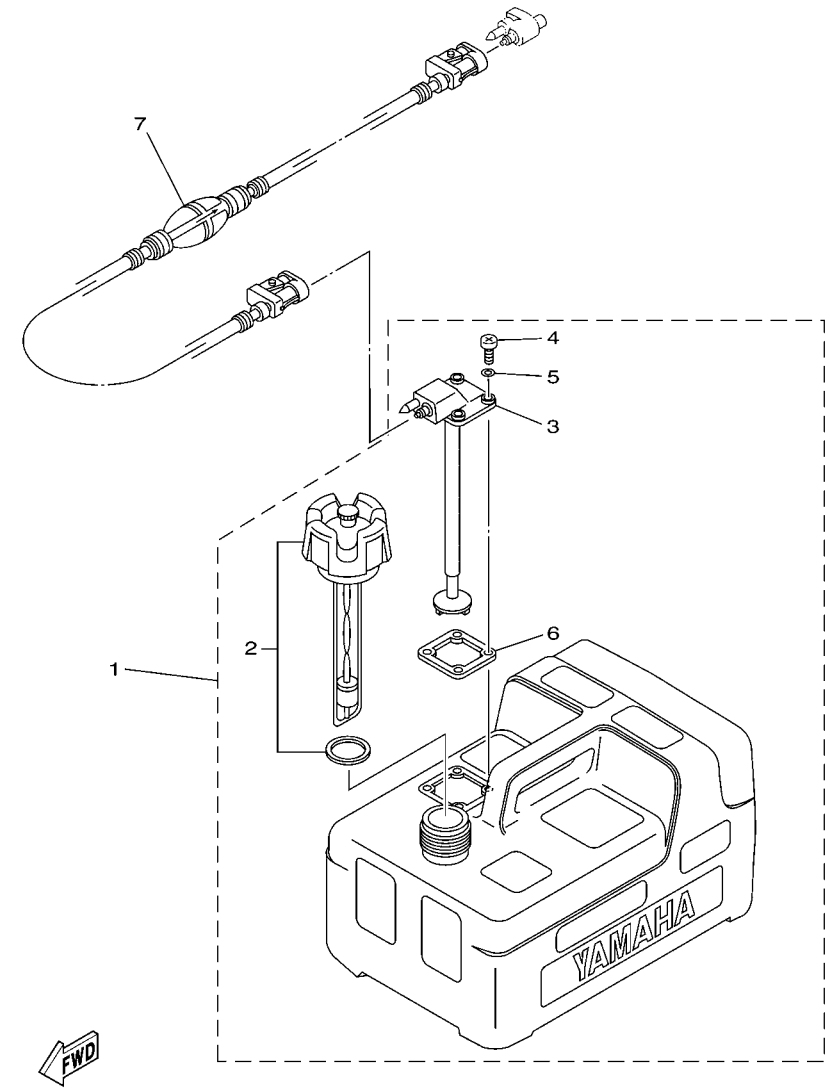

66M4100-D270

FIG. 12 FUEL TANK — DEPOSITO DE COMBUSTIBLE

REF. NO.	PART NO. CODIGO Nº	DESCRIPTION DESCRIPCION	6E0C	6E3C	6E4C			REMARKS OBSERVACIONES
1	6YL–24201–05	FUEL TANK ASSY (12L) TANQUE DEL COMBUSTIBLE (12L)			1			AP AP
2	6YL–24610–01	.CAP ASSY .TAPA COMPLETA			1			
3	6YL–24260–01	.FUEL METER ASSY .MEDIDOR DE COMBUSTIBLE COMPL.			1			
4	90157–05M16	.SCREW, PAN HEAD .TORNILLO CABEZA CONICA PLANA			4			
5	6YL–24329–00	.SEAL .SELLO			4			
6	6YL–24268–01	.GASKET, FUEL METER .EMPAQ MEDIDOR DE COMBUSTIBLE			1			
7	6YL–24306–54	FUEL PIPE COMP. 1 TUBO COMBUST. COMPL 1			1			AP AP

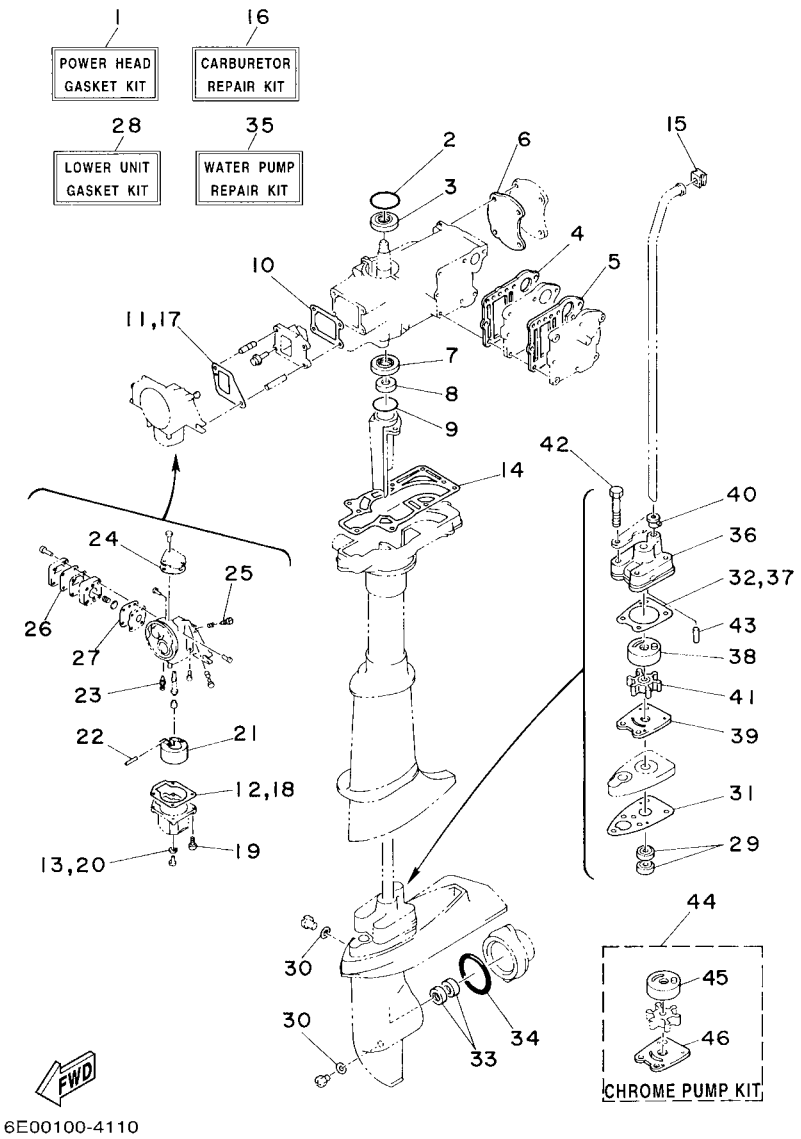

FIG. 13 REPAIR KIT — ESTUCHE REPARATION

REF. NO.	PART NO. CODIGO Nº	DESCRIPTION DESCRIPCION	6E0C	6E3C	6E4C			REMARKS OBSERVACIONES
1	6E0–W0001–A4	POWER HEAD GASKET KIT JUEGO DE EMPAQUE DE MOTOR	1					
	6E3–W0001–A4	POWER HEAD GASKET KIT JUEGO DE EMPAQUE DE MOTOR		1	1			
2	93210–42159	.O-RING .ANILLO O	1	1	1			
3	93102–20M25	.OIL SEAL .SELLO ACEITE	1	1	1			
4	6E0–41112–A1	.GASKET, EXHAUST INNER COVER .EMPAQUE	1					
	6E3–41112–A1	.GASKET, EXHAUST INNER COVER .EMPAQUE		1	1			
5	6E0–41114–A1	.GASKET, EXHAUST OUTER COVER .EMPAQUE	1					
	6E3–41114–A1	.GASKET, EXHAUST OUTER COVER .EMPAQUE		1	1			
6	6E0–11193–A1	.GASKET, HEAD COVER 1 .EMPAQUE	1					
	6E3–11193–A1	.GASKET, HEAD COVER 1 .EMPAQUE		1	1			
7	93101–20M29	.OIL SEAL .SELLO ACEITE	1	1	1			
8	93101–10M25	.OIL SEAL .SELLO ACEITE	1	1	1			
9	93210–31MJ5	.O-RING .ANILLO O	1	1	1			
10	6E0–13621–A2	.GASKET, VALVE SEAT .JUNTA, DE VALV.DE EMPAQUE	1	1	1			
11	6E0–14198–A0	.GASKET .EMPAQUE	1	1	1			
12	6E0–14384–00	.GASKET, FLOAT CHAMBER .EMPAQUE DE CAMARA DE BOIA	1	1	1			
13	646–14198–01	.GASKET .EMPAQUE	1	1	1			
14	6E0–45113–A1	.GASKET, UPPER CASING .EMPAQUE	1	1	1			
15	646–44365–00	.DAMPER, WATER SEAL 1 .HULE DE SELLO DE AGUA 1	1	1	1			
16	6E0–W0093–04	CARBURETOR REPAIR KIT KIT REPARACION CARBURADOR	1	1	1			
17	6E0–14198–A0	.GASKET .EMPAQUE	1	1	1			
18	6E0–14384–00	.GASKET, FLOAT CHAMBER .EMPAQUE DE CAMARA DE BOIA	1	1	1			
19	97980–04116	.SCREW, WITH WASHER .TORNILLO, CON ARANDELA	4	4	4			
20	646–14198–01	.GASKET .EMPAQUE	1	1	1			
21	6E7–14385–01	.FLOAT .BOIA	1	1	1			
22	647–14386–00	.PIN, FLOAT .PASADOR DE BOIA	1	1	1			
23	6F5–14392–00	.VALVE, NEEDLE .VALVULA DE AGUJA	1	1	1			

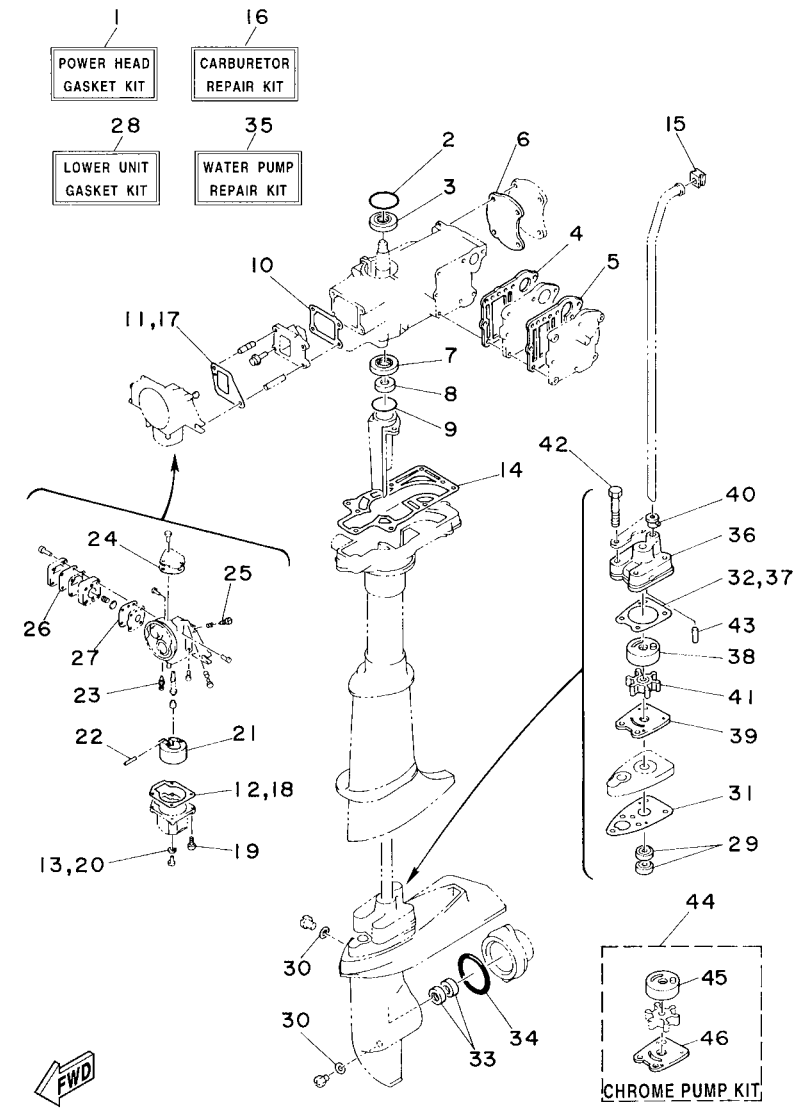

6E00100-4110

FIG. 13 REPAIR KIT — ESTUCHE REPARATION

REF. NO.	PART NO. CODIGO Nº	DESCRIPTION DESCRIPCION	6E0C	6E3C	6E4C			REMARKS OBSERVACIONES
24	6E0–14227–00	.GASKET .EMPAQUE	1	1	1			
25	647–14323–00	.SCREW, AIR ADJUSTING .TORNILLO DE AJUSTE DE AIRE	1	1	1			
26	6E0–24471–00	.DIAPHRAGM .DIAFRAGMA	1	1	1			
27	6E0–24411–00	.DIAPHRAGM .DIAFRAGMA	1	1	1			
28	6E0–W0001–C1	LOWER UNIT GASKET KIT JUEGO DE JUNTA UNIDAD INFERIOR	1	1	1			
29	93101–10M14	.OIL SEAL .SELLO ACEITE	2	2	2			
30	90430–08020	.GASKET .JUNTA	3	3	3			
31	6E0–45315–A0	.PACKING, LOWER CASING .EMPAQUE	1	1	1			
32	6E0–44315–A0	.GASKET, WATER PUMP .EMPAQUE	1	1	1			
33	93101–13M12	.OIL SEAL .SELLO ACEITE	2	2	2			
34	93210–48214	.O-RING .ANILLO O	1	1	1			
35	6E0–W0078–A3	WATER PUMP REPAIR KIT ESTUCHE REPARACION BOMBA AGUA	1	1	1			
36	6E0–44311–00	.HOUSING, WATER PUMP .CAJA BOMBA DE AGUA	1	1	1			
37	6E0–44315–A0	.GASKET, WATER PUMP .EMPAQUE	1	1	1			
38	6E0–44322–02	.INSERT, CARTRIDGE .CARTUCHO	1	1	1			
39	6E0–44323–00	.OUTER PLATE, CARTRIDGE .PLACA EXTERIOR DEL CARTUCHO	1	1	1			
40	6E0–44366–00	.DAMPER, WATER SEAL 2 .GOMA DEL SELLO DE AGUA 2	1	1	1			
41	6E0–44352–00	.IMPELLER .IMPULSOR	1	1	1			
42	97095–06045	.BOLT .PERNO	4	4	4			
43	93604–18080	.PIN, DOWEL .PASADOR DE CLAVIJA	2	2	2			
44	6E0–W0078–0A	CHROME PUMP KIT ESTUCHE REPARACION BOMBA AGUA	1	1	1			
45	6E0–44322–40	.INSERT, CARTRIDGE .CARTUCHO	1	1	1			
46	6E0–44323–40	.OUTER PLATE, CARTRIDGE .PLACA EXTERIOR DEL CARTUCHO	1	1	1			

NUMERICAL INDEX
INDICE NUMERICO

PART NO. CODIGO Nº	REF. NO.
6E0–11191–01–1S	2 – 21
6E3–11191–01–1S	2 – 21
6E0–11193–A1	2 – 22
	13 – 6
6E3–11193–A1	2 – 22
	13 – 6
650–11370–01	2 – 3
6E5–11372–01	2 – 5
6E0–11400–00	2 – 31
6E3–11400–00	2 – 31
6E0–11412–00	2 – 32
6E3–11412–00	2 – 32
6E0–11422–00	2 – 33
6E3–11422–00	2 – 33
6G1–11610–00	2 – 42
6J1–11610–00	2 – 42
6E0–11631–00–98	2 – 41
6E3–11631–00–98	2 – 41
6G1–11633–00	2 – 44
6E0–11651–01	2 – 37
6G1–11681–00	2 – 34
6E5–12411–02	2 – 46
6E5–12412–00	2 – 47
6E0–13610–00	3 – 1
6J1–13610–00	3 – 1
6E0–13621–A2	3 – 3
	13 – 10
6E0–14157–00	3 – 17
6E0–14159–00	3 – 34
6E0–14180–00	3 – 6
646–14198–01	3 – 8
	13 – 13
	13 – 20
6E0–14198–A0	3 – 35
	13 – 11
	13 – 17
646–14212–01	3 – 21
6E0–14227–00	3 – 18
	13 – 24
6E0–14301–05	3 – 5
6E3–14301–05	3 – 5
664–14321–01	3 – 22
647–14323–00	3 – 20
	13 – 25
647–14326–00	3 – 24
6E0–14341–01	3 – 14
6E3–14341–02	3 – 14
648–14342–23	3 – 23

PART NO. CODIGO Nº	REF. NO.
648–14342–26	3 – 23
648–14343–40	3 – 15
6E0–14346–00	3 – 31
6E0–14381–02	3 – 7
6E0–14384–00	3 – 10
	13 – 12
	13 – 18
6E7–14385–01	3 – 12
	13 – 21
647–14386–00	3 – 13
	13 – 22
6F5–14392–00	3 – 16
	13 – 23
6E0–14417–00	3 – 38
6E0–14418–00	3 – 39
624–14485–00	2 – 4
6E0–15100–01	2 – 2
6E3–15100–02	2 – 2
6E0–15359–01–94	5 – 5
6E0–15396–03–CA	2 – 16
6E0–15705–00	4 – 11
6E0–15710–73–94	4 – 1
6E4–15710–74–94	4 – 1
6E4–15711–72–94	4 – 2
6E0–15714–01	4 – 3
6E0–15717–00	4 – 5
6E0–15723–00–94	5 – 2
677–15741–01	4 – 9
6E4–15746–70	4 – 23
6E4–15747–70	4 – 26
656–15748–00	4 – 19
6G1–15755–00	4 – 14
6E0–15758–01	4 – 15
6E3–15758–01	4 – 15
6E0–15761–00	4 – 16
6E4–15770–70	4 – 21
6E0–15772–71	4 – 22
6E4–15772–71	4 – 22
6G1–15779–00	4 – 12
67D–21757–00	7 – 21
6E3–24111–00	7 – 13
6E3–24115–00	7 – 23
6E0–24181–00	7 – 30
6E0–24182–00	7 – 10
6E1–24182–00	8 – 10
6E3–24182–00	7 – 10
6E0–24183–00	5 – 19
6YL–24201–05	12 – 1

PART NO. CODIGO Nº	REF. NO.
6E3–24217–00	7 – 51
6L5–24251–00	7 – 31
68T–24251–01	7 – 37
646–24251–02	8 – 12
6YL–24260–01	12 – 3
6YL–24268–01	12 – 6
6G1–24304–02	7 – 39
	8 – 11
6YL–24306–54	12 – 7
6E3–24311–00	7 – 32
688–24313–00	8 – 13
6E3–24313–00	7 – 41
6E3–24314–00	7 – 35
6E3–24315–00	7 – 42
6E3–24316–00	7 – 57
6YL–24329–00	12 – 5
6E0–24378–00	2 – 9
6E0–24411–00	3 – 32
	13 – 27
6E0–24412–00	3 – 29
6E0–24413–00	3 – 26
6E0–24423–00	3 – 30
6E0–24434–00	3 – 33
6E0–24435–00	3 – 28
6E0–24471–00	3 – 27
	13 – 26
6E0–24500–10	7 – 34
6E0–24500–61	7 – 52
624–24521–02	7 – 53
102–24522–01	7 – 54
6J1–24524–00	7 – 47
6E0–24566–61	7 – 55
6E3–24566–61	7 – 55
6E0–24591–10	7 – 50
6YL–24610–01	12 – 2
68D–24610–10	7 – 14
68D–24612–00	7 – 15
69M–24633–00	7 – 20
624–24634–00	7 – 19
6E3–24641–10	7 – 22
6E0–24641–20	7 – 22
6E0–26301–01	9 – 24
626–28193–01–94	10 – 55
6E0–41111–01–1S	2 – 24
6E3–41111–01–1S	2 – 24
6E0–41112–A1	2 – 25
	13 – 4
6E3–41112–A1	2 – 25

PART NO. CODIGO Nº	REF. NO.
6E3–41112–A1	13 – 4
6E0–41113–01–1S	2 – 26
6E3–41113–01–1S	2 – 26
6E0–41114–A1	2 – 27
	13 – 5
6E3–41114–A1	2 – 27
	13 – 5
6E0–41256–00	3 – 43
661–41262–02	3 – 47
6E0–41271–01	3 – 44
6E0–41272–00	3 – 45
6E0–42111–02–4D	9 – 1
6E0–42119–00	9 – 14
6E0–42125–00	9 – 9
6E4–42129–00	9 – 3
6E0–42129–02	9 – 2
6E0–42131–02–94	9 – 5
6E0–42134–02	9 – 10
6E0–42137–10	9 – 16
6E0–42138–01	9 – 21
6E0–42159–02	9 – 22
6E0–42177–00	9 – 15
6E0–42528–03	10 – 47
6L5–42529–01	10 – 50
6E0–42537–02	10 – 43
6E0–42538–02	10 – 44
6E0–42539–00	10 – 45
6E0–42542–00	7 – 11
6E0–42549–00	10 – 46
6L5–42561–00	10 – 51
6E4–42610–40	1 – 1
6E3–42610–60	1 – 1
6E0–42610–90	1 – 1
6E0–42615–00	1 – 2
6E0–42647–01	1 – 3
6E0–42651–02	1 – 4
6E0–42675–40	1 – 6
6E0–42676–40	1 – 7
6E0–42678–40	1 – 8
6E3–42678–40	1 – 8
6E0–42681–40	1 – 10
	1 – 11
6S7–42698–40	1 – 12
6E0–42711–05–4D	8 – 1
6E0–42711–10–4D	7 – 1
6AH–42794–40	9 – 40
6E0–42815–00–4D	7 – 2
	8 – 2

PART NO. CODIGO Nº	REF. NO.
6E0–42816–00	7 – 4
	8 – 4
6E0–43111–02–4D	10 – 11
6E0–43112–01–4D	10 – 12
6A1–43113–01	10 – 19
620–43114–00	10 – 13
6E0–43116–01	10 – 14
6E0–43118–01	10 – 15
6E0–43160–01	10 – 36
689–43165–00	10 – 37
6E0–43181–00	10 – 29
620–43189–00	10 – 32
6E0–43311–04–4D	10 – 25
6E0–43312–02–4D	10 – 26
6E0–43313–00–94	10 – 31
6E0–43614–00–CA	10 – 39
6E0–43632–00	10 – 30
6E4–44111–72–4D	9 – 25
6E0–44116–00	9 – 29
6E0–44121–00	9 – 32
6E0–44143–00	9 – 34
6E0–44143–10	9 – 34
6E0–44145–00	9 – 37
6E0–44146–00	9 – 38
6G1–44147–00	11 – 15
6E0–44150–00	11 – 54
6E0–44150–10	11 – 54
6E0–44191–11	1 – 9
6L5–44196–00	10 – 52
6L5–44197–00	10 – 53
6E0–44311–00	11 – 24
	13 – 36
6E0–44315–A0	11 – 25
	13 – 32
	13 – 37
6E0–44322–02	11 – 26
	13 – 38
6E0–44322–40	11 – 26
	13 – 45
6E0–44323–00	11 – 27
	13 – 39
6E0–44323–40	11 – 27
	13 – 46
6E0–44328–00	11 – 33
6E0–44352–00	11 – 29
	13 – 41
6E0–44361–00	11 – 34
6E0–44361–10	11 – 34

PART NO. CODIGO Nº	REF. NO.
646–44365–00	11 – 35
	13 – 15
6E0–44366–00	11 – 28
	13 – 40
6E0–45111–02–4D	10 – 1
6E0–45111–12–4D	10 – 1
6E0–45113–A1	2 – 48
	13 – 14
647–45151–01	10 – 9
6L5–45251–03	11 – 7
6E0–45300–03–4D	11 – 1
6E0–45300–13–4D	11 – 1
6E0–45311–02–4D	11 – 2
6E0–45315–A0	11 – 16
	13 – 31
6E0–45316–09	11 – 4
6E0–45317–09	11 – 3
6E0–45318–01	11 – 57
6E0–45321–01–CA	11 – 14
6E0–45331–00–CA	11 – 56
6E0–45361–01–4D	11 – 19
6E0–45511–01	11 – 36
6E0–45511–11	11 – 36
6E0–45551–00	11 – 38
6E0–45560–00	11 – 41
6E0–45570–00	11 – 42
6E0–45611–01	11 – 49
6L5–45616–00	11 – 51
6E0–45631–00	11 – 44
654–45633–00	11 – 46
654–45635–00	11 – 48
6E0–45941–01	11 – 55
6E0–45943–01	11 – 55
6E0–45949–00	11 – 55
6L5–45987–01	11 – 50
6E0–81303–40	5 – 23
6E0–81303–80	5 – 23
6E0–81328–70	5 – 13
6E0–81336–70	5 – 12
6AH–81994–40	7 – 63
	8 – 19
6AH–81995–40	4 – 31
6E0–82316–01–94	6 – 3
6A0–82317–00	7 – 26
6E0–82317–00	6 – 4
663–82370–01	6 – 2
6E3–82370–21	6 – 2
6G1–82370–21	6 – 2

NUMERICAL INDEX
INDICE NUMERICO

PART NO. CODIGO Nº	REF. NO.
682–82556–00	7 – 61
	8 – 17
6E0–82575–00	7 – 60
	8 – 16
689–8257Y–00	7 – 62
	8 – 18
6E0–85520–70	5 – 6
6E0–85540–71	6 – 11
6E0–85548–00	6 – 10
6E0–85550–72	5 – 1
6E0–85560–71	5 – 4
6E0–85570–00	6 – 5
6E0–85592–70	5 – 10
6E0–85595–70	5 – 8
6E0–W0001–A4	13 – 1
6E3–W0001–A4	13 – 1
6E0–W0001–C1	13 – 28
6E0–W0004–00	3 – 2
6J1–W0004–00	3 – 2
6E0–W0078–0A	13 – 44
6E0–W0078–A3	13 – 35
6E0–W0090–04–1S	2 – 1
6E3–W0090–04–1S	2 – 1
6E0–W0093–04	13 – 16
656–W2810–02	1 – 13
90101–06335	10 – 22
90101–08M07	10 – 17
90105–06035	2 – 29
90105–06037	2 – 28
	2 – 28
90105–06039	2 – 23
	2 – 30
90105–06M14	4 – 17
	5 – 3
90105–06M16	2 – 7
90105–06M17	2 – 8
90116–06M08	3 – 49
90119–06M18	4 – 25
90119–06M40	11 – 12
90152–05011	9 – 19
90157–05M16	12 – 4
90159–04035	5 – 14
90159–04036	5 – 9
90159–05037	5 – 11
90159–05038	5 – 7
90159–05040	5 – 24
90170–10113	5 – 21
90170–16M35	7 – 46

PART NO. CODIGO Nº	REF. NO.
90185–08057	10 – 20
90201–06M30	4 – 8
90201–08M03	10 – 18
90201–08M54	11 – 53
90201–10119	9 – 18
90201–10126	5 – 22
90201–11M49	11 – 40
90201–13M50	11 – 43
90201–32M48	2 – 40
90202–05088	4 – 29
90202–07M22	9 – 13
90202–12M16	3 – 46
90202–16061	9 – 28
90206–12052	7 – 5
	8 – 5
90206–16M06	9 – 27
90209–18112	2 – 38
90243–04M01	10 – 16
90250–05046	11 – 45
90266–04M00	1 – 5
90266–04M05	10 – 54
90269–02M09	9 – 20
90280–04M06	5 – 20
90340–08002	11 – 11
90386–12069	7 – 3
	8 – 3
90386–26M30	9 – 4
90386–26M33	9 – 8
90387–06119	7 – 27
90387–06504	4 – 24
90387–06M11	10 – 21
90387–06M14	11 – 13
90430–08020	11 – 10
	13 – 30
90445–07M00	2 – 11
90445–07M28	2 – 12
	2 – 14
90445–07M32	2 – 13
90445–09003	7 – 58
90445–09057	8 – 14
90464–09M21	7 – 44
90464–10M53	7 – 45
90464–12010	7 – 38
90465–08M62	7 – 49
90465–13M11	7 – 33
90467–06016	2 – 10
	2 – 15
90467–08004	7 – 36

PART NO. CODIGO Nº	REF. NO.
90467–08004	7 – 40
	7 – 43
	7 – 59
	8 – 15
90467–08M01	11 – 37
90468–07M02	2 – 49
90468–10005	4 – 27
90468–100A0	7 – 18
90480–10M13	10 – 10
90480–14M14	7 – 8
	8 – 8
90480–25161	6 – 8
90501–10064	11 – 47
90501–100A5	7 – 16
90501–10227	4 – 20
90501–23215	9 – 17
90502–08M05	10 – 49
90508–14M10	10 – 40
90508–14M11	10 – 41
90508–16020	10 – 34
90508–16021	10 – 35
90510–08M03	4 – 4
91490–12010	9 – 12
91490–16010	4 – 30
	9 – 36
91490–25030	11 – 52
91690–30008	10 – 38
91790–05010	4 – 28
92903–05600	9 – 7
92990–04200	7 – 17
92990–05600	3 – 41
	9 – 35
	11 – 60
92990–06300	11 – 9
92990–06600	10 – 23
92995–06100	5 – 18
92995–06600	2 – 20
	3 – 37
	6 – 7
	7 – 25
	7 – 29
	10 – 4
	10 – 6
	11 – 18
93101–10M14	11 – 5
	13 – 29
93101–10M25	2 – 18
	13 – 8

PART NO. CODIGO Nº	REF. NO.
93101–13M12	11 – 21
	13 – 33
93101–20M29	2 – 39
	13 – 7
93102–20M25	5 – 15
	13 – 3
93210–12327	9 – 26
93210–31MJ5	2 – 17
	13 – 9
93210–42159	5 – 16
	13 – 2
93210–48214	11 – 22
	13 – 34
93306–004U0	11 – 6
	11 – 20
93306–204U0	2 – 35
93310–112V0	2 – 43
93310–418V1	2 – 36
93420–22M03	11 – 58
93430–06M02	4 – 10
93450–13022	2 – 45
93604–09066	11 – 30
93604–18080	11 – 32
	13 – 43
93606–12019	2 – 6
	10 – 2
93700–06M03	10 – 8
	10 – 27
94702–00040	2 – 50
94702–00272	2 – 50
95303–06600	4 – 7
95380–06600	10 – 24
95380–06700	3 – 36
	7 – 7
	8 – 7
	9 – 30
	10 – 7
95380–08600	10 – 48
95627–06325	3 – 48
95895–06010	10 – 42
95895–06012	9 – 31
	11 – 8
95895–06016	3 – 4
	6 – 1
	11 – 23
95895–06020	4 – 18
	6 – 12
	7 – 9

PART NO. CODIGO Nº	REF. NO.
95895–06020	8 – 9
	9 – 39
	10 – 33
95895–06025	7 – 12
	9 – 33
95895–06035	10 – 28
97013–05020	9 – 6
97080–06010	6 – 9
97095–06014	7 – 24
97095–06016	2 – 19
	5 – 17
	6 – 6
	10 – 5
97095–06025	7 – 28
	11 – 17
97095–06030	10 – 3
97095–06045	11 – 31
	13 – 42
97313–06035	4 – 6
97780–40720	3 – 42
97880–05025	3 – 40
	11 – 59
97885–04010	7 – 56
97885–05012	9 – 11
	9 – 23
97885–06030	7 – 6
	8 – 6
97890–04007	3 – 19
97890–05006	3 – 9
97980–04116	3 – 11
	13 – 19
97980–04120	3 – 25
97980–04210	7 – 48
99001–06600	11 – 39

PART NO. CODIGO Nº	REF. NO.