YAMAHA

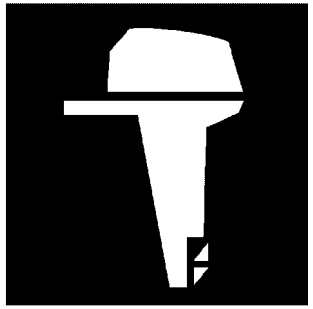

PARTS CATALOGUE
CATALOGO DE REPUESTOS

F350BST'24 (6ML1)
FL350BST'24 (6MM1)

YAMAHA
GENUINE
Parts & Accessories

1Y6ML-200SA

( )

F350BST/FL350BST
PARTS CATALOGUE
©2024 by Yamaha Motor Co., Ltd.
1st edition, January 2024
All rights reserved.
Any reprinting or unauthorized use
without the written permission of
Yamaha Motor Co., Ltd.
is expressly prohibited.
Printed in Japan.

F350BST/FL350BST
CATALOGO DE REPUESTOS
©2024 por Yamaha Motor Co., Ltd.
1ª edición, enero 2024
Todos los derechos reservados.
Toda reproducción o uso no autorizado
sin el consentimiento escrito de
Yamaha Motor Co., Ltd.
quedan expresamente prohibidos
Impreso en Japón.

FOREWORD

This Parts Catalogue is related to the parts for the model(s) on the cover page. When you are ordering replacement parts, please refer to this Parts Catalogue and quote both part numbers and part names correctly.

1. Modifications or additions which have been made after the issue of the Parts Catalogue will be announced in the Parts News.
   It is advisable that you make the necessary corrections to the Parts Catalogue according to the Parts News.

2. Abbreviations
   The following abbreviations are used in this Parts Catalogue.
   "UR" Use specified parts number.
   "UN" Use as many as needed.
   "AP" Alternate Parts
   "LM" Locally Made (Parts need to be ordered locally)
   "F#" Frame No. (Applicable machine No.)
   "O/S" Over Size

3. The number of components for assembly
   - Parts, which are to be supplied in an assembly, are listed with a dot (.) in front of the part name as shown below.
   - The numeral appearing to the right of each component part indicates the quantity of parts for each assembly unit.

PART NO.	DESCRIPTION	Q'TY	REMARKS
2F5–83310–60	FRONT FLASHER LIGHT ASSY	2	
115–83311–60	.BULB (6V–18W)	1	

4. Applicable colours of graphics are represented in the "REMARKS" as shown below.

PART NO.	DESCRIPTION	Q'TY	REMARKS
2N4–24110–00–X5	FUEL TANK COMP.	2	MXR
3J1–24240–10	.GRAPHIC, FUEL TANK	1	FOR MXR

5. Note that the illustrations for reference in finding parts numbers are not to be used for assembling. When assembling, please use the applicable service manual.

6. The asterisk (*) before a reference number indicates modified items after the first edition.

7. Applicable Serial No.
   Engine Serial No.

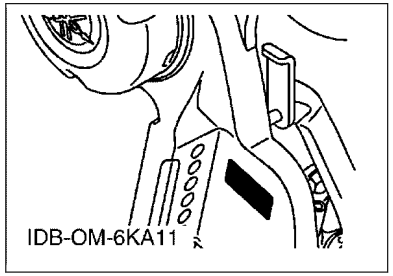

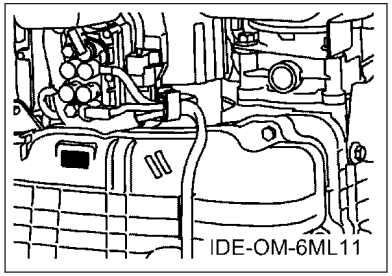

8. Applicable Engine Starting Serial No.

Model	Serial No.	Model	Serial No.
F350B	6ML-1000001	FL350B	6MM-1000001

9. Applicable Colour Code

Abbreviation	Colour Name	Colour Code
DBN1	DARK BLUISH GRAY 1	008D
WPA	WHITE PEARL A	00CE

10. Quantity Column Information

Column No.	Name Of Q'ty Column	Applicable Model
1	6ML1	F350BST,F350BST2
2	6MM1	FL350BST,FL350BST2

PROLOGO

Este catálogo de repuestos corresponde a las piezas para el o los modelos que figuran en la página de portada. Al formular el pedido de repuestos, se ruega citar este catálogo y especificar correctamente el número y el nombre de las piezas.

1. Las modificaciones y agregados que se hayan realizado después de la edición de este Catálogo de Repuestos, serán anunciados en las Informaciones de Recambios.
   Es recomendable que se hagan las correcciones necesarias en el Catálogo de Repuestos de acuerdo con las Informaciones de Recambios.

2. Abreviaciones
   En este. Catálogo de Repuestos se emplean las siguientes abreviaciones.
   "UR" Usar el número de partes especificado
   "UN" Usar la cantidad necesaria
   "AP" Piezas sustitutivas
   "LM" Fabricación local (Hay que pedir los repuestos en las cercanías)
   "F#" Nº de bastidor (Nº aplicable a la máquina)
   "O/S" Sobredimensionado

3. La cantidad de componentes para el montaje
   - Los componentes, suministrados como conjunto, se describen con un punto (.) que precede al nombre del parte como se indica a continuación.
   - La numeración que aparece a la derecha de cada descripción indica la cantidad de partes por cada unidad de conjunto.

CODIGO Nº	DESCRIPCION	CANT.	OBSERVACIONES
2F5–83310–60	ENSAMBLAJE DE LA LUZ	2	
115–83311–60	.BOMBILLA (6V–18W)	1	

4. Los colores de los componentes se indican como sigue en la columna de "OBSERVACIONES".

CODIGO Nº	DESCRIPCION	CANT.	OBSERVACIONES
2N4–24110–00–X5	COMP. DEL TANQUE	2	MXR
3J1–24240–10	.GRAFICO, DEL TANQUE	1	PARA MXR

5. Debe tenerse en cuenta que las ilustraciones sirven como guia para la búsqueda de los números de partes y no deben usarse para el montaje. Durante el montaje, se recomienda usar el manual de taller correspondiente.

6. EL asterisco (*) antes del número de referencia indica los elementos modificados después de la primera edición.

7. Números de serie
   Nº de Serie del motor

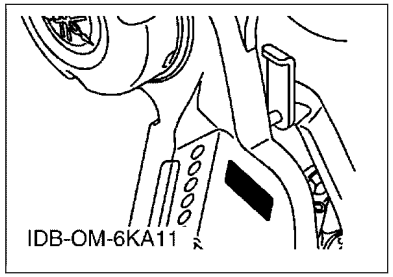

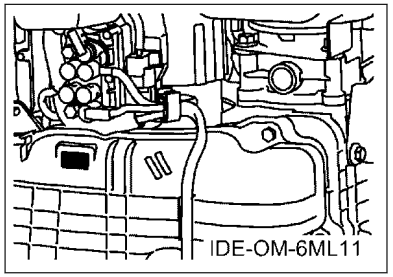

8. Números de serie del motor

Modelo	Nº de serie	Modelo	Nº de serie
F350B	6ML-1000001	FL350B	6MM-1000001

9. Códigos de color aplicables

Abreviatura	Nombre de color	Código de color
DBN1	DARK BLUISH GRAY 1	008D
WPA	WHITE PEARL A	00CE

10. Informacion para la columna de cantidades

Columna Nº	Nombre de la columna de cantidades	Modelo aplicable
1	6ML1	F350BST,F350BST2
2	6MM1	FL350BST,FL350BST2

CONTENTS

SCHEDULED SERVICE PARTS....1
TOP COWLING....2
CYLINDER & CRANKCASE 1....4
CRANKSHAFT & PISTON....6
CYLINDER & CRANKCASE 2....8
CYLINDER & CRANKCASE 3....10
CYLINDER & CRANKCASE 4....11
VALVE....12
INTAKE 1....15
INTAKE 2....17
THROTTLE BODY ASSY 1....18
THROTTLE BODY ASSY 2....19
FUEL INJECTION PUMP 1....20
FUEL INJECTION PUMP 2....22
FUEL 1....23
FUEL 2....24
GENERATOR....25
ELECTRICAL 1....27
ELECTRICAL 2....29
ELECTRICAL 3....30
ELECTRICAL 4....32
ELECTRICAL 5....33
STARTING MOTOR....34
BOTTOM COWLING 1....35
BOTTOM COWLING 2....37
BOTTOM COWLING 3....39
BOTTOM COWLING 4....40
CONTROL....41
BRACKET 1....43
BRACKET 2....45
BRACKET 3....46
BRACKET 4....47
POWER TRIM & TILT ASSY 1....49
POWER TRIM & TILT ASSY 2....53
UPPER CASING....54
OIL PAN....56
LOWER CASING & DRIVE 1....57
LOWER CASING & DRIVE 2....62
LOWER CASING & DRIVE 3....64
LOWER CASING & DRIVE 4....68
DEC 1 (SINGLE)....70
DEC 2 (SINGLE)....71
DEC 3 (TWIN)....72
DEC 4 (TWIN)....73
OPTIONAL PARTS 1....74
OPTIONAL PARTS 2....75
OPTIONAL PARTS 3....76
OPTIONAL PARTS 4....77
OPTIONAL PARTS 5....78
OPTIONAL PARTS 6....79
OPTIONAL PARTS 7....80
REPAIR KIT 1....81
REPAIR KIT 2....82

INDEX

NUMERICAL INDEX....84

CONTENIDO

PARTES DE REPUESTO TEMPORALES..... 1
SOPORTE SUPERIOR..... 2
CILINDRO & CARTER 1..... 4
CIGUENAL & PISTON.....6
CILINDRO & CARTER 2..... 8
CILINDRO & CARTER 3..... 10
CILINDRO & CARTER 4..... 11
VALVULA.....12
ADMISION 1.....15
ADMISION 2.....17
CAJA DE ACELERADOR COMPL 1.....18
CAJA DE ACELERADOR COMPL 2.....19
BOMBA DE INYECTOR 1.....20
BOMBA DE INYECTOR 2.....22
COMBUSTIBLE 1.....23
COMBUSTIBLE 2.....24
GENERADOR.....25
EQUIPO ELECTRICO 1..... 27
EQUIPO ELECTRICO 2..... 29
EQUIPO ELECTRICO 3..... 30
EQUIPO ELECTRICO 4..... 32
EQUIPO ELECTRICO 5..... 33
MOTOR DE ARRANQUE.....34
CUBIERTA INFERIOR 1..... 35
CUBIERTA INFERIOR 2..... 37
CUBIERTA INFERIOR 3..... 39
CUBIERTA INFERIOR 4..... 40
CONTROL..... 41
SOPORTE 1..... 43
SOPORTE 2..... 45
SOPORTE 3..... 46
SOPORTE 4..... 47
COMPONER Y PODER VARILLA 1.....49
COMPONER Y PODER VARILLA 2.....53
FUNDA SUPERIOR.....54
OIL PAN.....56
IMPULSOR E INFERIOR 1..... 57
IMPULSOR E INFERIOR 2..... 62
IMPULSOR E INFERIOR 3..... 64
IMPULSOR E INFERIOR 4..... 68
DEC 1 (UNICO)..... 70
DEC 2 (UNICO)..... 71
DEC 3 (DOBLE).....72
DEC 4 (DOBLE).....73
PARTES OPCIONALES 1.....74
PARTES OPCIONALES 2.....75
PARTES OPCIONALES 3.....76
PARTES OPCIONALES 4.....77
PARTES OPCIONLES 5..... 78
PARTES OPCIONALES 6.....79
PARTES OPCIONALES 7.....80
ESTUCHE REPARATION 1..... 81
ESTUCHE REPARATION 2..... 82

INDICE

INDICE NUMERICO.....84

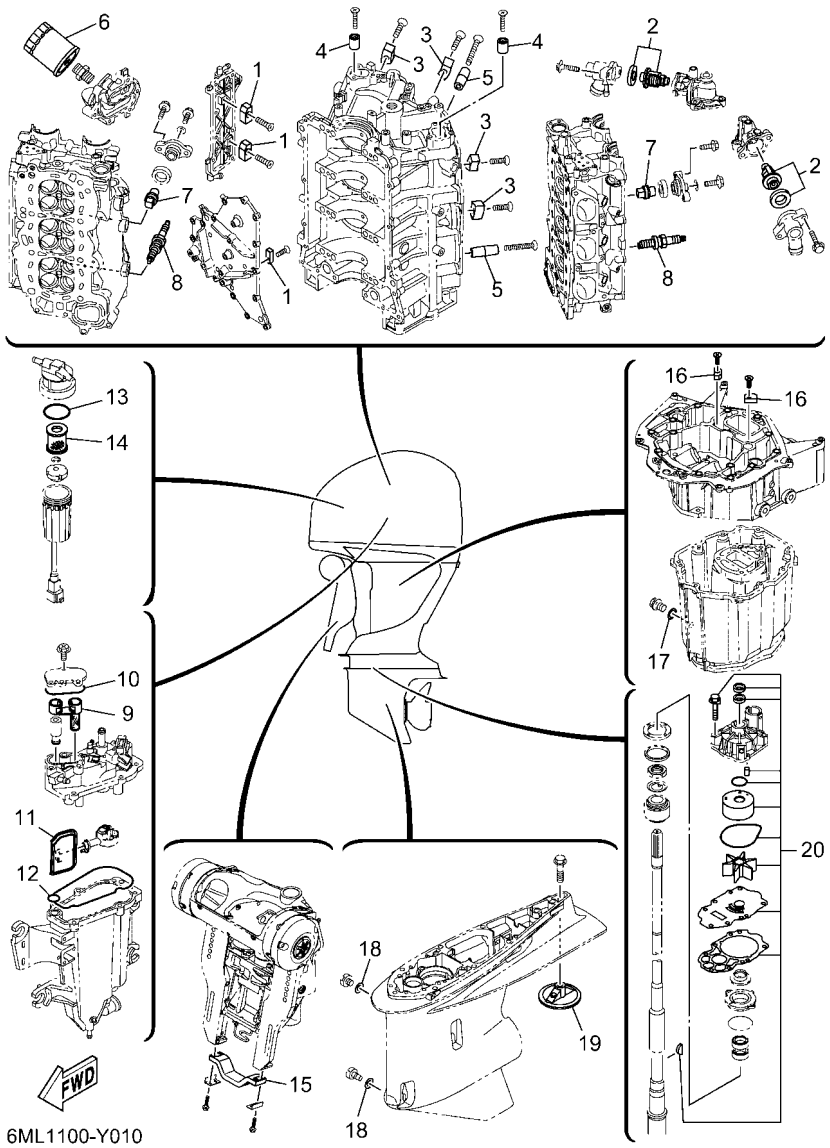

FIG. 1 SCHEDULED SERVICE PARTS — PARTES DE REPUESTO TEMPORALES

REF. NO.	PART NO. CODIGO Nº	DESCRIPTION DESCRIPCION	6ML1	6MM1				REMARKS OBSERVACIONES
1	63P–11325–01	ANODE ANODO	3	3				
2	6CE–12411–10	THERMOSTAT TERMOSTAT	2	2				
3	6AW–1132P–00	ANODE 5 ANODO 5	4	4				
4	68T–11325–00	ANODE ANODO	2	2				
5	6AW–1132N–01	ANODE 4 ANODO 4	2	2				
6	N26–13440–03	ELEMENT ASSY, OIL CLEANER ELEMENTO FILTRO DE ACEITE	1	1				
7	6ML–11325–00	ANODE ANODO	8	8				
8	94702–00442	PLUG, SPARK (NGK ILMAR7E9) BUJIA (NGK ILMAR7E9)	6	6				
9	6CB–24501–01	FILTER, FUEL FIELTRO	1	1				
10	6CB–13016–00	O-RING ANILLO O	1	1				
11	6LH–13915–00	FILTER FILTRO	1	1				
12	6CB–14984–00	GASKET, FLOAT CHAMBER EMPAQUE CAMARA DE BOIA	1	1				
13	6P3–24564–00	GASKET EMPAQUE	1	1				
14	6P3–24563–02	ELEMENT, FILTER ELEMENTO DEL FILTRO	1	1				
15	6G5–45251–02	ANODE CATODE	1	1				
16	63P–11325–11	ANODE ANODO	2	2				
17	90430–14M09	GASKET JUNTA	1	1				
18	90430–08003	GASKET JUNTA	2	2				
19	6CE–45373–00	ANODE ANODO	1	1				
20	6CE–W0078–02	WATER PUMP REPAIR KIT ESTUCHE REPARACION BOMBA AGUA	1	1				

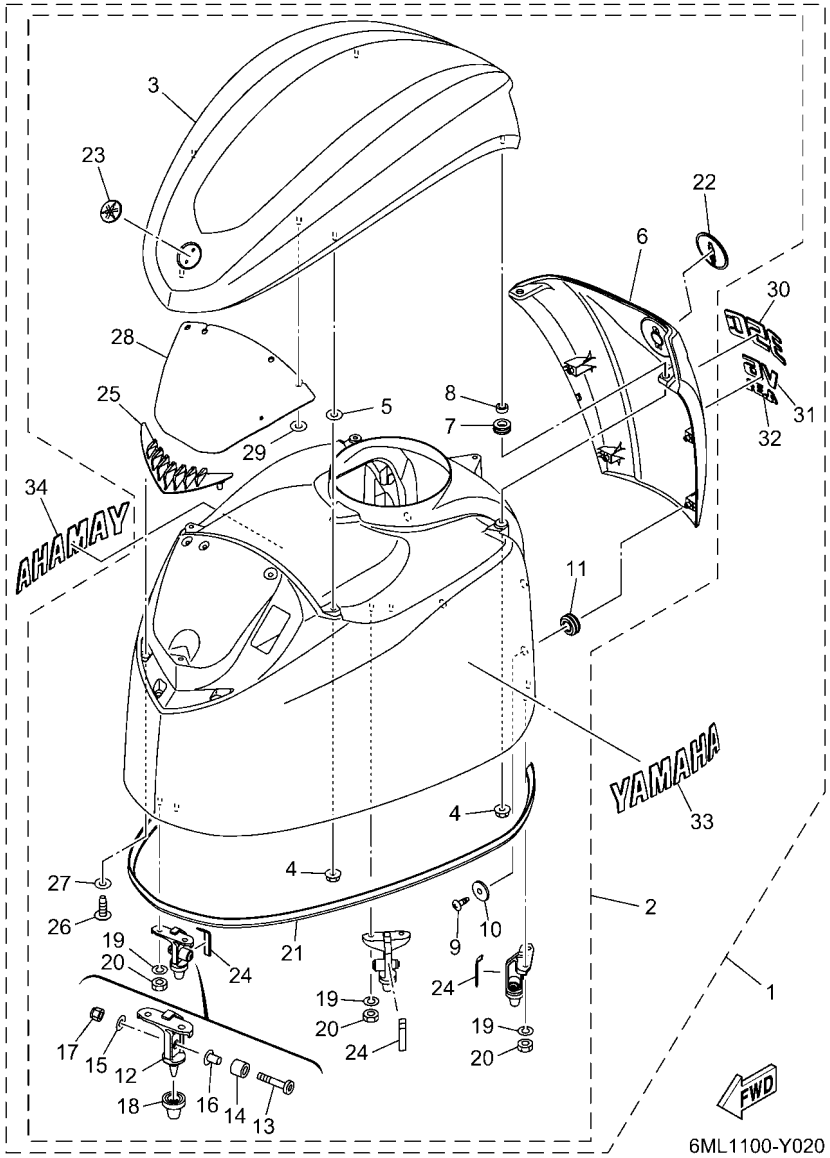

FIG. 2 TOP COWLING — SOPORTE SUPERIOR

REF. NO.	PART NO. CODIGO Nº	DESCRIPTION DESCRIPCION	6ML1	6MM1				REMARKS OBSERVACIONES
1	6ML–42610–00–8D	TOP COWLING ASSY SOPORTE SUPERIOR COMPL.	1	1				GRAY GRAY
	6ML–42610–00–CE	TOP COWLING ASSY SOPORTE SUPERIOR COMPL.	1	1				WHITE WHITE
2	6ML–4261A–00–8D	.TOP COWLING W/O GRAPHICS .SOPORTE SUPERIOR SIN GRAFICOS	1	1				GRAY GRAY
	6ML–4261A–00–CE	.TOP COWLING W/O GRAPHICS .SOPORTE SUPERIOR SIN GRAFICOS	1	1				WHITE WHITE
3	6ML–42613–00–8D	..MOLDING, AIR DUCT ..MOLDURA CONDUCTO AIRE	1	1				GRAY GRAY
	6ML–42613–00–CE	..MOLDING, AIR DUCT ..MOLDURA CONDUCTO AIRE	1	1				WHITE WHITE
4	90179–06M28	..NUT ..TUERCA	6	6				
5	6CB–42545–00	..WASHER, PLAIN ..ARANDELA, PLANA	3	3				
6	6KA–42625–00–8D	..PANEL, REAR ..TABLERO	1	1				GRAY GRAY
	6KA–42625–00–CE	..PANEL, REAR ..TABLERO	1	1				WHITE WHITE
7	90480–13004	..GROMMET ..TAPON	2	2				
8	90387–07054	..COLLAR ..ESPACIADOR	2	2				
9	97780–50016	..SCREW, TAPPING ..TORNILLO DE CABEZA DE CONO ACH	4	4				
10	90201–053R1	..WASHER, PLATE ..ARANDELA PLANA	4	4				
11	90480–16009	..GROMMET ..TAPON	4	4				
12	6CB–42647–A0	..HOLDER, CLAMP BAND ..MORDAZA DE ABRAZADERA	3	3				
13	90111–08078	..BOLT, HEXAGON SOCKET BUTTON ..TORNILLO	3	3				
14	90387–10094	..COLLAR ..ESPACIADOR	3	3				
15	92990–08600	..WASHER, PLATE ..ARANDELA PLANA	3	3				
16	90387–08M45	..COLLAR ..ESPACIADOR	3	3				
17	95780–08300	..NUT, FLANGE ..TUERCA	3	3				
18	6AW–42663–01	..DAMPER 2 ..AMORTIGUADOR 2	3	3				
19	92990–06100	..WASHER, SPRING ..ARANDELA PLANA	6	6				
20	95380–06600	..NUT, HEXAGON ..TUERCA	6	6				
21	6CB–42628–00	..SEAL ..SELLO DE GOMA	1	1				
22	6KN–42697–00	..TUNING FORK MARK ..MARCA, YAMAHA	1	1				
23	6LB–42697–00	..TUNING FORK MARK ..MARCA, YAMAHA	1	1				

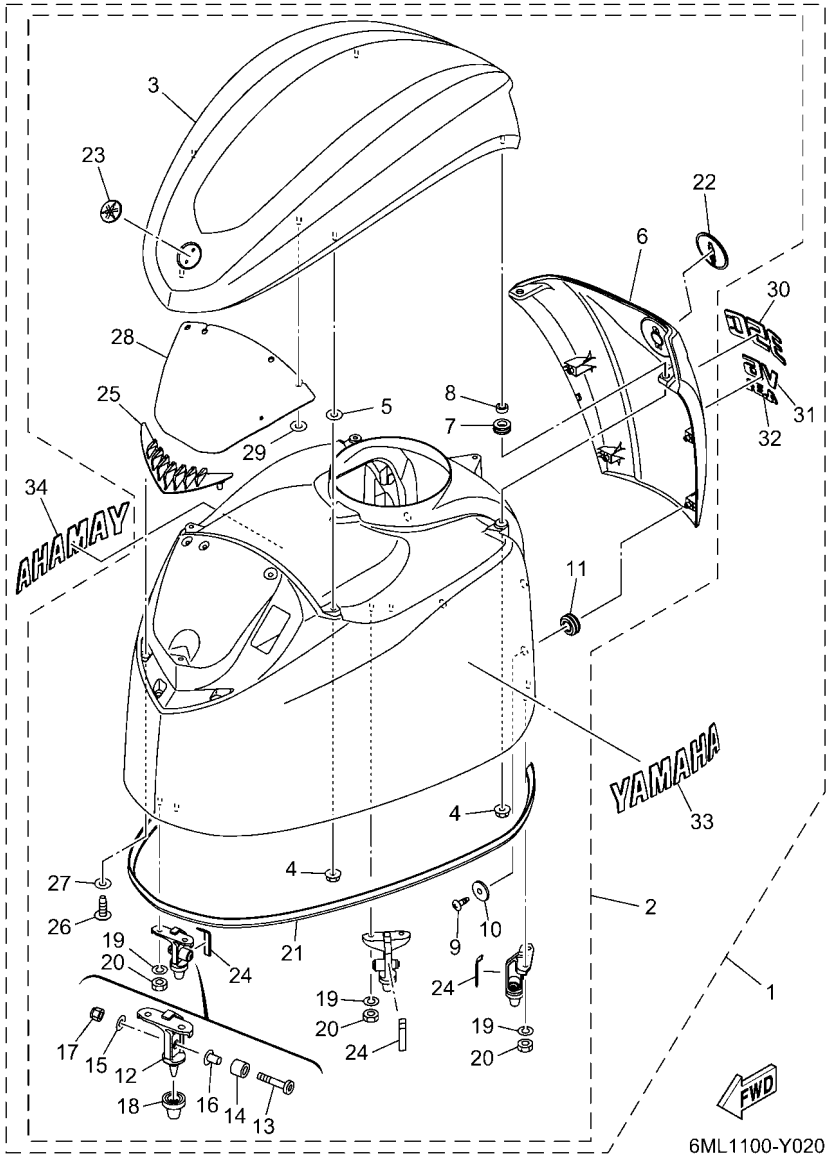

FIG. 2 TOP COWLING — SOPORTE SUPERIOR

REF. NO.	PART NO. CODIGO Nº	DESCRIPTION DESCRIPCION	6ML1	6MM1				REMARKS OBSERVACIONES
24	6CB–42134–01	..COVER ..CUBIERTA	3	3				
25	6ML–42626–00	..LOUVER, 1 ..AMORTIGUADOR 1	1	1				
26	97780–50016	..SCREW, TAPPING ..TORNILLO DE CABEZA DE CONO ACH	3	3				
27	6CB–42545–00	..WASHER, PLAIN ..ARANDELA, PLANA	3	3				
28	6ML–21266–00	..SHEET 1 ..HOJA 1	1	1				
29	90183–05M06	..NUT, SPRING ..TUERCA DE RESORTE	1	1				
30	6ML–42678–00	.GRAPHIC, REAR .CALCAMONIA TRASERA	1	1				
31	6KA–4267A–00	.GRAPHIC, REAR 2 .CALCAMONIA TRASERA 2	1	1				
32	6ML–42682–00	.MARK, COWLING .MARCA DE CUBIERTA	1	1				
33	6KA–2153A–00	.EMBLEM, YAMAHA .EMBLEMA, YAMAHA	1	1				
34	6KA–2153B–00	.EMBLEM, YAMAHA .EMBLEMA, YAMAHA	1	1				

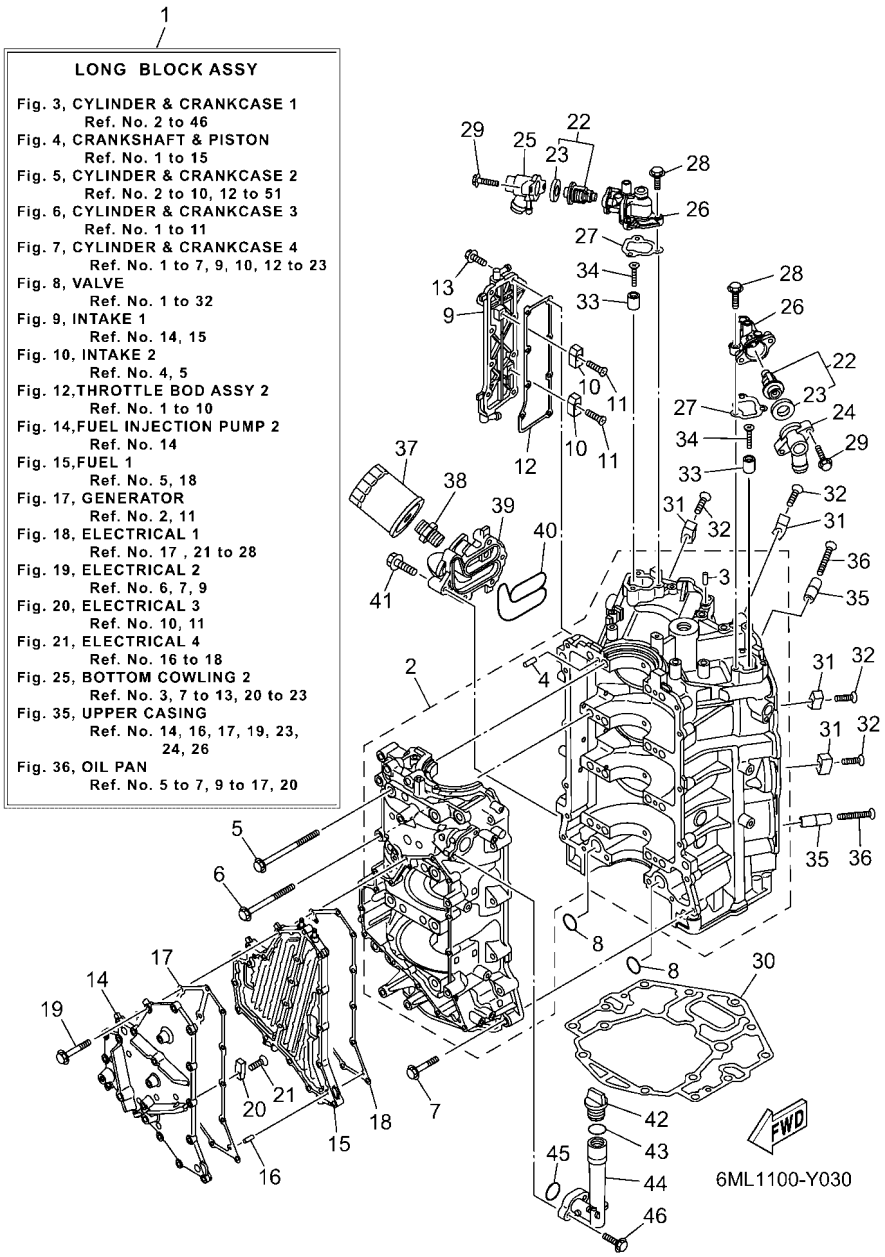

FIG. 3 CYLINDER & CRANKCASE 1 — CILINDRO & CARTER 1

REF. NO.	PART NO. CODIGO Nº	DESCRIPTION DESCRIPCION	6ML1	6MM1				REMARKS OBSERVACIONES
1	6ML–11000–00	LONG BLOCK ASSY SUBENSAMBLAJE DEL MOTOR	1	1				
2	6ML–W1510–00	CRANKCASE ASSY CARTER COMPLETO	1	1				
3	93606–12019	.PIN, DOWEL .PASADOR DE CLAVIJA	3	3				
4	93606–12019	.PIN, DOWEL .PASADOR DE CLAVIJA	8	8				
5	6CB–15187–00	BOLT PERNO	8	8				
6	6CB–15481–00	BOLT 1 PERNO 1	8	8				
7	90105–08175	BOLT, FLANGE TORNILLO	16	16				
8	93210–26658	O-RING ANILLO O	2	2				
9	6CE–1131C–00–9S	COVER, JOINT CUBIERTA DE UNION	1	1				
10	63P–11325–01	ANODE ANODO	2	2				
11	90151–06M02	SCREW, COUNTERSUNK TORNILLO EMBUTIDO	2	2				
12	6ML–1131B–00	GASKET, COVER EMPAQUE DE CUBIERTA	1	1				
13	90105–06M07	BOLT, FLANGE TORNILLO	8	8				
14	6ML–15411–00–9S	COVER, CRANKCASE 1 CUBIERTA DE CARTER 1	1	1				
15	6ML–15421–00–9S	COVER, CRANKCASE 2 TAPA DE CARTER DERECHA	1	1				
16	91690–40010	PIN, SPRING PASADOR DE RESORTE	4	4				
17	6ML–15451–00	GASKET, CRANKCASE COVER 1 EMPAQ DE CUBIERTA DE CARTER	1	1				
18	6ML–15461–00	GASKET, CRANKCASE COVER 2 JUNTA TAPA CARTER DERECHO 2	1	1				
19	90105–06151	BOLT, FLANGE TORNILLO	20	20				
20	63P–11325–01	ANODE ANODO	1	1				
21	90151–06M02	SCREW, COUNTERSUNK TORNILLO EMBUTIDO	1	1				
22	6CE–12411–10	THERMOSTAT TERMOSTAT	2	2				
23	67F–12412–00	.SEAL, THERMOSTAT .SELLO TERMOSTATO	1	1				
24	6CE–12413–B0–9S	COVER, THERMOSTAT CUBIERTA TERMOSTATO	1	1				
25	6CE–12413–A0–9S	COVER, THERMOSTAT CUBIERTA TERMOSTATO	1	1				
26	6ML–12422–00–9S	COVER, HOUSING CUBIERTA DE CAJA	2	2				
27	6CB–12427–11	GASKET, HOUSING COVER 1 EMPAQUE DE TAPA	2	2				

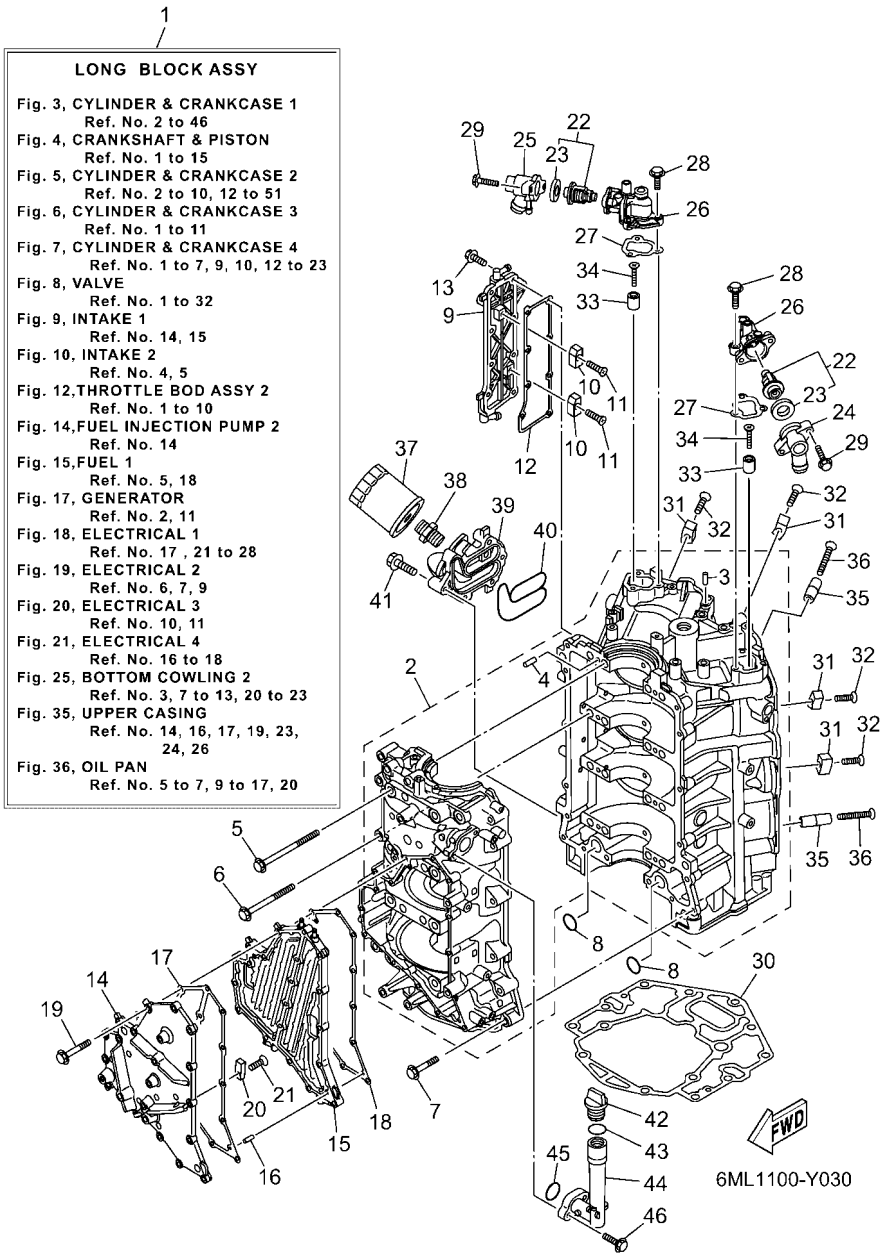

FIG. 3 CYLINDER & CRANKCASE 1 — CILINDRO & CARTER 1

REF. NO.	PART NO. CODIGO Nº	DESCRIPTION DESCRIPCION	6ML1	6MM1				REMARKS OBSERVACIONES
28	95027–06025	BOLT, FLANGE PERNO, DE BRIDA	6	6				
29	90105–06037	BOLT, FLANGE TORNILLO	4	4				
30	6KA–11351–00	GASKET, CYLINDER JUNTA, DE CILINDRO	1	1				
31	6AW–1132P–00	ANODE 5 ANODO 5	4	4				
32	98780–06530	SCREW, FLAT HEAD TORNILLO, CABEZA PLANA	4	4				
33	68T–11325–00	ANODE ANODO	2	2				
34	90151–05M05	SCREW, COUNTERSUNK TORNILLO EMBUTIDO	2	2				
35	6AW–1132N–01	ANODE 4 ANODO 4	2	2				
36	98780–06550	SCREW, FLAT HEAD TORNILLO, CABEZA PLANA	2	2				
37	N26–13440–03	ELEMENT ASSY, OIL CLEANER ELEMENTO FILTRO DE ACEITE	1	1				
38	90401–19001	BOLT, UNION PERNO DE UNION	1	1				
39	6CE–13446–10–9S	CONNECTOR CONECTOR	1	1				
40	6CB–13477–00	GASKET EMPAQUE	1	1				
41	90105–06151	BOLT, FLANGE TORNILLO	5	5				
42	6G8–15363–00	PLUG, OIL TAPON DE ACEITE	1	1				
43	93210–24M79	O-RING ANILLO O	1	1				
44	6ML–15319–00	JOINT CONECTOR	1	1				
45	93210–27370	O-RING ANILLO O	1	1				
46	90105–06037	BOLT, FLANGE TORNILLO	2	2				

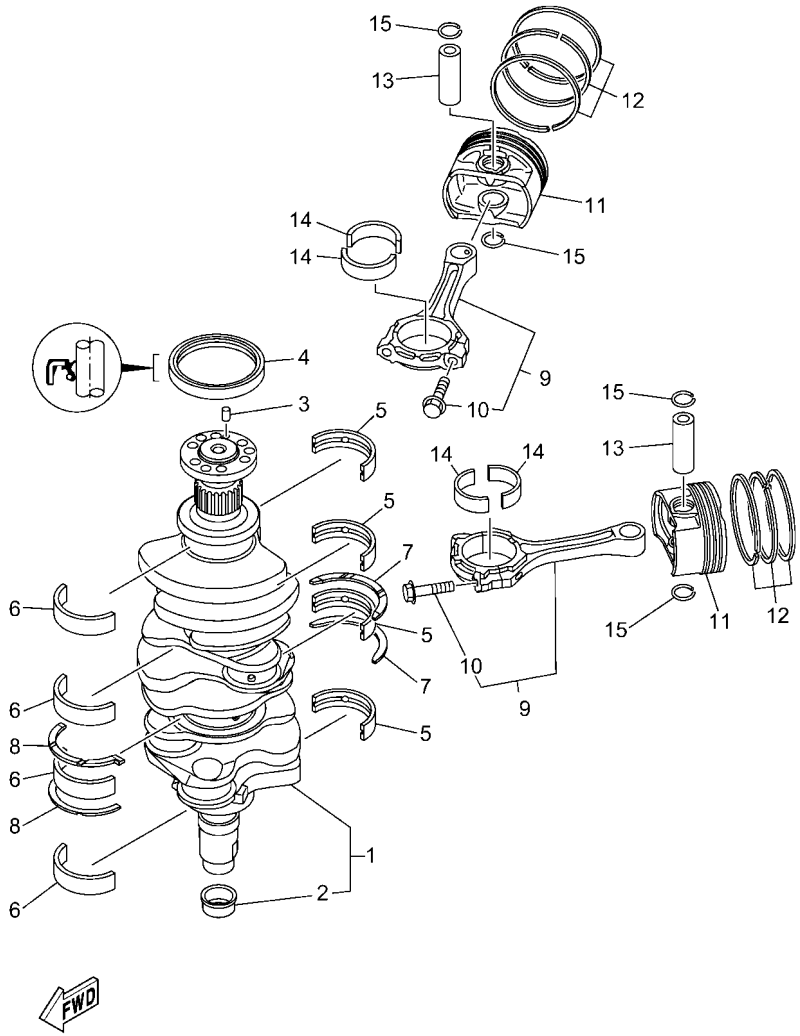

6ML1100-Y040

FIG. 4 CRANKSHAFT & PISTON — CIGUENAL & PISTON

REF. NO.	PART NO. CODIGO Nº	DESCRIPTION DESCRIPCION	6ML1	6MM1				REMARKS OBSERVACIONES
1	6ML–11410–00	CRANKSHAFT CIGUENAL	1	1				
2	6CB–11478–00	.COLLAR .COLLAR	1	1				
3	93606–12019	PIN, DOWEL PASADOR DE CLAVIJA	1	1				
4	93102–85008	OIL SEAL SELLO ACEITE	1	1				
5	6GR–11416–A0	PLANE BEARING, CRANKSHAFT 1 COJINETE PLANO 1	4	4				UR ORANGE UR ORANGE
	6GR–11416–00	PLANE BEARING, CRANKSHAFT 1 COJINETE PLANO 1	4	4				UR BLACK UR BLACK
	6GR–11416–10	PLANE BEARING, CRANKSHAFT 1 COJINETE PLANO 1	4	4				UR BLUE UR BLUE
	6GR–11416–20	PLANE BEARING, CRANKSHAFT 1 COJINETE PLANO 1	4	4				UR PINK UR PINK
	6GR–11416–30	PLANE BEARING, CRANKSHAFT 1 COJINETE PLANO 1	4	4				UR WHITE UR WHITE
	6GR–11416–40	PLANE BEARING, CRANKSHAFT 1 COJINETE PLANO 1	4	4				UR YELLOW GREEN UR YELLOW GREEN
6	6GR–11417–A0	PLANE BEARING, CRANKSHAFT 2 COJINETE PLANO 2	4	4				UR ORANGE UR ORANGE
	6GR–11417–00	PLANE BEARING, CRANKSHAFT 2 COJINETE PLANO 2	4	4				UR BLACK UR BLACK
	6GR–11417–10	PLANE BEARING, CRANKSHAFT 2 COJINETE PLANO 2	4	4				UR BLUE UR BLUE
	6GR–11417–20	PLANE BEARING, CRANKSHAFT 2 COJINETE PLANO 2	4	4				UR PINK UR PINK
	6GR–11417–30	PLANE BEARING, CRANKSHAFT 2 COJINETE PLANO 2	4	4				UR WHITE UR WHITE
	6GR–11417–40	PLANE BEARING, CRANKSHAFT 2 COJINETE PLANO 2	4	4				UR YELLOW GREEN UR YELLOW GREEN
7	6CB–11426–03	BEARING, THRUST 1 COJINETE DE EMPUJE 1	2	2				
8	6CB–11427–03	BEARING, THRUST 2 COJINETE DE EMPUJE 2	2	2				
9	6ML–W1165–00	CONNECTING ROD ASSY BIELA COMPLETA	6	6				
10	6ML–11654–00	.BOLT, CONNECTING ROD .TORNILLO DE BIELA	2	2				
11	6ML–11631–00	PISTON (STD) PISTON (NORMA)	6	6				
12	6ML–11603–00	PISTON RING SET (STD) JUEGO DE ANILLOS (NORMA)	6	6				
13	6GR–11633–00	PIN, PISTON PASADOR, PISTON	6	6				
14	6ML–11656–00	PLANE BEARING, CONNECTING ROD COJINETE PLANO	12	12				UR UR
	6ML–11656–10	PLANE BEARING, CONNECTING ROD COJINETE PLANO	12	12				UR UR
	6ML–11656–20	PLANE BEARING, CONNECTING ROD COJINETE PLANO	12	12				UR UR
	6ML–11656–30	PLANE BEARING, CONNECTING ROD COJINETE PLANO	12	12				UR UR

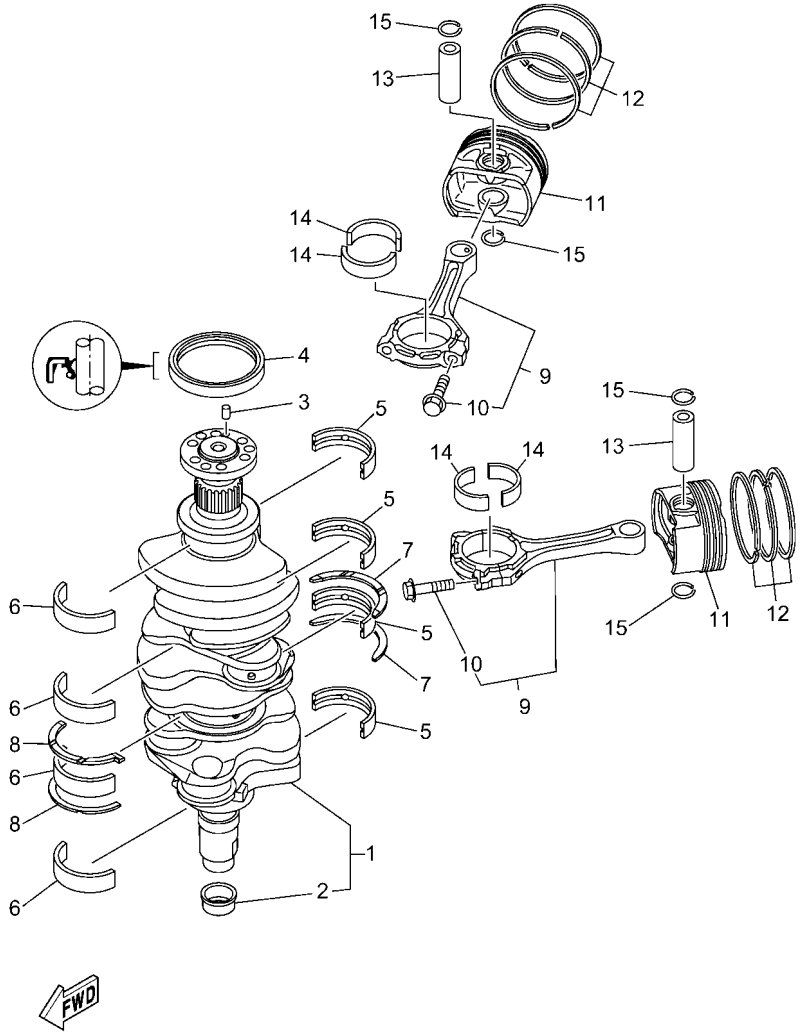

6ML1100-Y040

FIG. 4 CRANKSHAFT & PISTON — CIGUENAL & PISTON

REF. NO.	PART NO. CODIGO Nº	DESCRIPTION DESCRIPCION	6ML1	6MM1				REMARKS OBSERVACIONES
14	6ML–11656–40	PLANE BEARING, CONNECTING ROD COJINETE PLANO	12	12				UR UR
15	6GR–11634–00	CLIP, PISTON PIN PRESILLA, BULON DE PISTON	12	12				

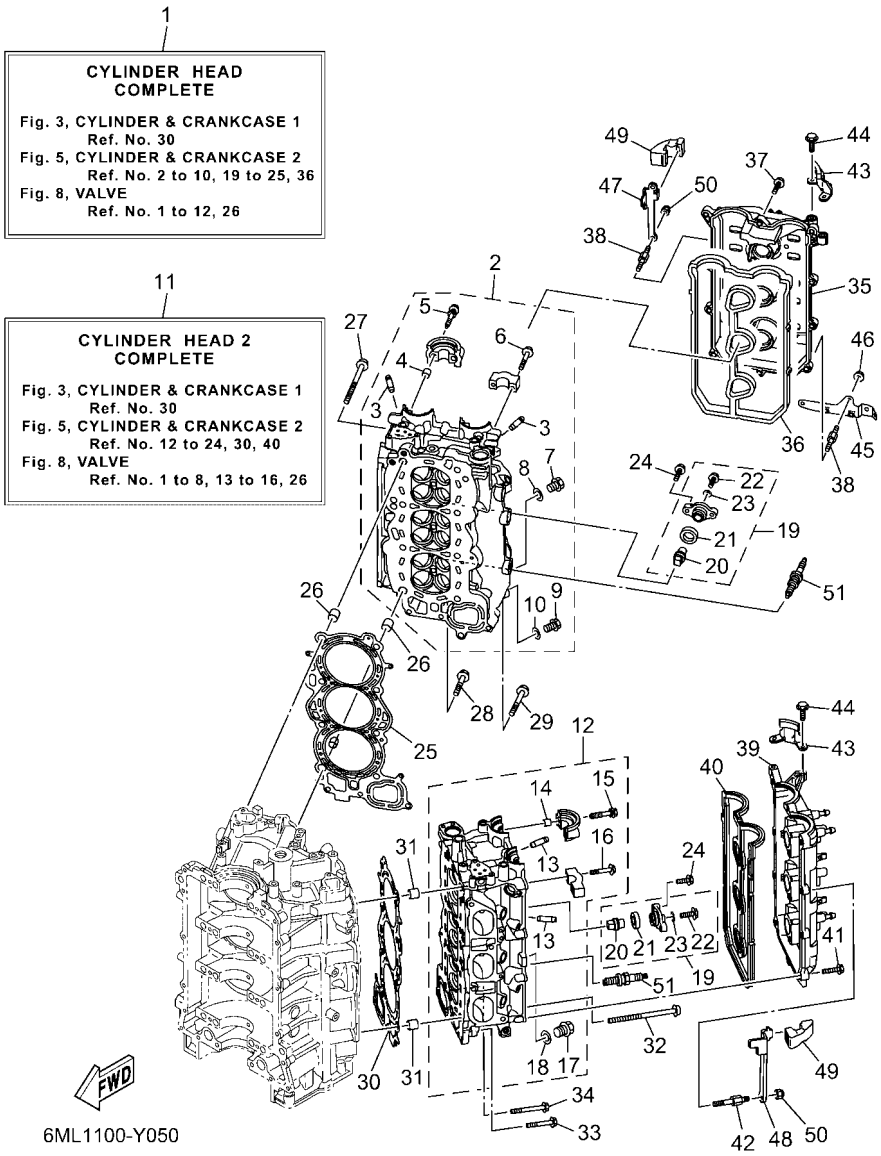

FIG. 5 CYLINDER & CRANKCASE 2 — CILINDRO & CARTER 2

REF. NO.	PART NO. CODIGO Nº	DESCRIPTION DESCRIPCION	6ML1	6MM1				REMARKS OBSERVACIONES
1	6ML–W009A–00–9S	CYLINDER HEAD COMPLETE CILINDRD CULATA COMPLETO	1	1				
2	6ML–11110–00–9S	CYLINDER HEAD ASSY CULATA DE CILINDRO COMPLETA	1	1				
3	6S5–11133–10	.GUIDE, VALVE 1 .GUIA DE VALVULA 1	12	12				
4	91809–08006	.PIN, DOWEL .PASADOR DE CLAVIJA	4	4				
5	90119–07001	.BOLT, WITH WASHER .TORNILLO CON ARANDELA	4	4				
6	90119–07234	.BOLT, WITH WASHER .TORNILLO CON ARANDELA	12	12				
7	90340–18M09	.PLUG, STRAIGHT SCREW .TORNILLO, DE DRENAJE	1	1				
8	90201–186F1	.WASHER, PLATE .ARANDELA PLANA	1	1				
9	90340–14M06	.PLUG, STRAIGHT SCREW .TORNILLO, DE DRENAJE	1	1				
10	90430–14115	.GASKET .JUNTA	1	1				
11	6ML–W009C–00–9S	CYLINDER HEAD 2 COMPLETE CULATA DE CILINDRO COMPL. 2	1	1				
12	6ML–11120–00–9S	CYLINDER HEAD ASSY 2 CULATA DE CILINDRO COMPL. 2	1	1				
13	6S5–11133–10	.GUIDE, VALVE 1 .GUIA DE VALVULA 1	12	12				
14	91809–08006	.PIN, DOWEL .PASADOR DE CLAVIJA	4	4				
15	90119–07001	.BOLT, WITH WASHER .TORNILLO CON ARANDELA	4	4				
16	90119–07234	.BOLT, WITH WASHER .TORNILLO CON ARANDELA	12	12				
17	90340–18M09	.PLUG, STRAIGHT SCREW .TORNILLO, DE DRENAJE	1	1				
18	90201–186F1	.WASHER, PLATE .ARANDELA PLANA	1	1				
19	6ML–11301–00	ANODE COVER ASSY CONJUNTO CUBIERTA DE ANODO	8	8				
20	6ML–11325–00	.ANODE .ANODO	1	1				
21	67F–11328–01	.GROMMET, ANODE .TAPON	1	1				
22	90105–06M07	.BOLT, FLANGE .TORNILLO	1	1				
23	90430–06M03	.GASKET .JUNTA	1	1				
24	95D95–08025	BOLT, FLANGE DEEP RECESS CERROJO, REBORDE HUECO PROFUND	16	16				
25	6ML–11181–00	GASKET, CYLINDER HEAD 1 JUNTA, DE CULATA 1	1	1				
26	90387–11005	COLLAR ESPACIADOR	2	2				
27	90149–11001	SCREW TORNILLO DE REGLAJE	8	8				

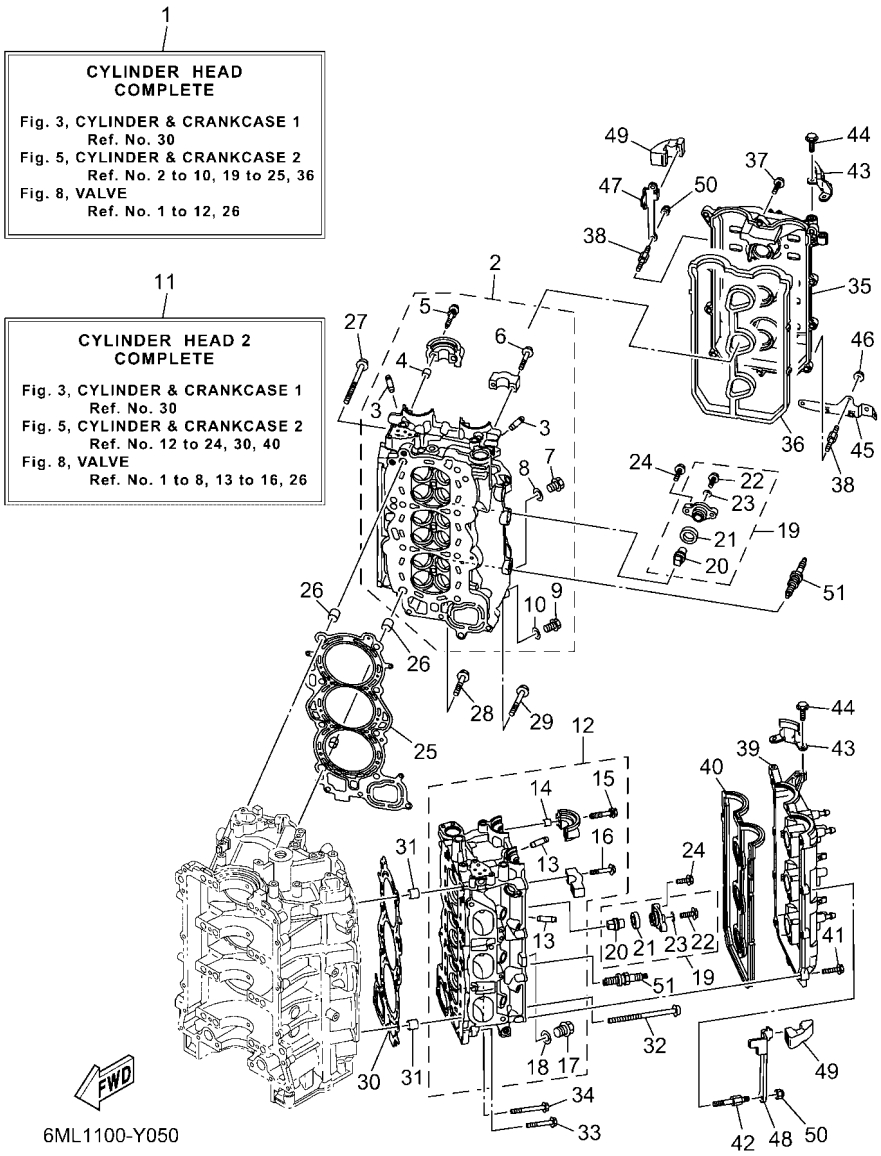

FIG. 5 CYLINDER & CRANKCASE 2 — CILINDRO & CARTER 2

REF. NO.	PART NO. CODIGO Nº	DESCRIPTION DESCRIPCION	6ML1	6MM1				REMARKS OBSERVACIONES
28	90105–08175	BOLT, FLANGE TORNILLO	2	2				
29	90105–08220	BOLT, FLANGE TORNILLO	1	1				
30	6ML–11182–00	GASKET, CYLINDER HEAD 2 EMPAQUE CULATA DE CILINDRO 2	1	1				
31	90387–11005	COLLAR ESPACIADOR	2	2				
32	90149–11001	SCREW TORNILLO DE REGLAJE	8	8				
33	90105–08175	BOLT, FLANGE TORNILLO	2	2				
34	90105–08220	BOLT, FLANGE TORNILLO	1	1				
35	6ML–11191–00	COVER, CYLINDER HEAD 1 TAPA CULATA DE CILINDRO 1	1	1				
36	6CB–11193–00	GASKET, HEAD COVER 1 EMPAQUE	1	1				
37	95D95–06030	BOLT, FLANGE DEEP RECESS CERROJO, REBORDE HUECO PROFUND	9	9				
38	90109–06277	BOLT PERNO	4	4				
39	6CB–11192–02	COVER, CYLINDER HEAD 2 TAPA CULATA DE CILINDRO 2	1	1				
40	6CB–11194–00	GASKET, HEAD COVER 2 EMPAQUE DE TAPA DE CULATA 2	1	1				
41	95D95–06030	BOLT, FLANGE DEEP RECESS CERROJO, REBORDE HUECO PROFUND	11	11				
42	90109–06277	BOLT PERNO	2	2				
43	6ML–15142–00	GUIDE 1 GUIA 1.	2	2				
44	95D95–06014	BOLT, FLANGE DEEP RECESS CERROJO, REBORDE HUECO PROFUND	4	4				
45	6KA–2134V–00	BRACKET SOPORTE	1	1				
46	90179–06M28	NUT TUERCA	2	2				
47	6KW–11998–00	BRACKET 1 SOPORTE 1	1	1				
48	6KW–11999–00	BRACKET 2 SOPORTE 2	1	1				
49	6KW–42662–00	DAMPER AMORTIGUADOR	2	2				
50	90185–06M07	NUT, SELF-LOCKING TUERCA AUTOBLOCANTE	4	4				
51	94702–00442	PLUG, SPARK (NGK ILMAR7E9) BUJIA (NGK ILMAR7E9)	6	6				

FIG. 6 CYLINDER & CRANKCASE 3 — CILINDRO & CARTER 3

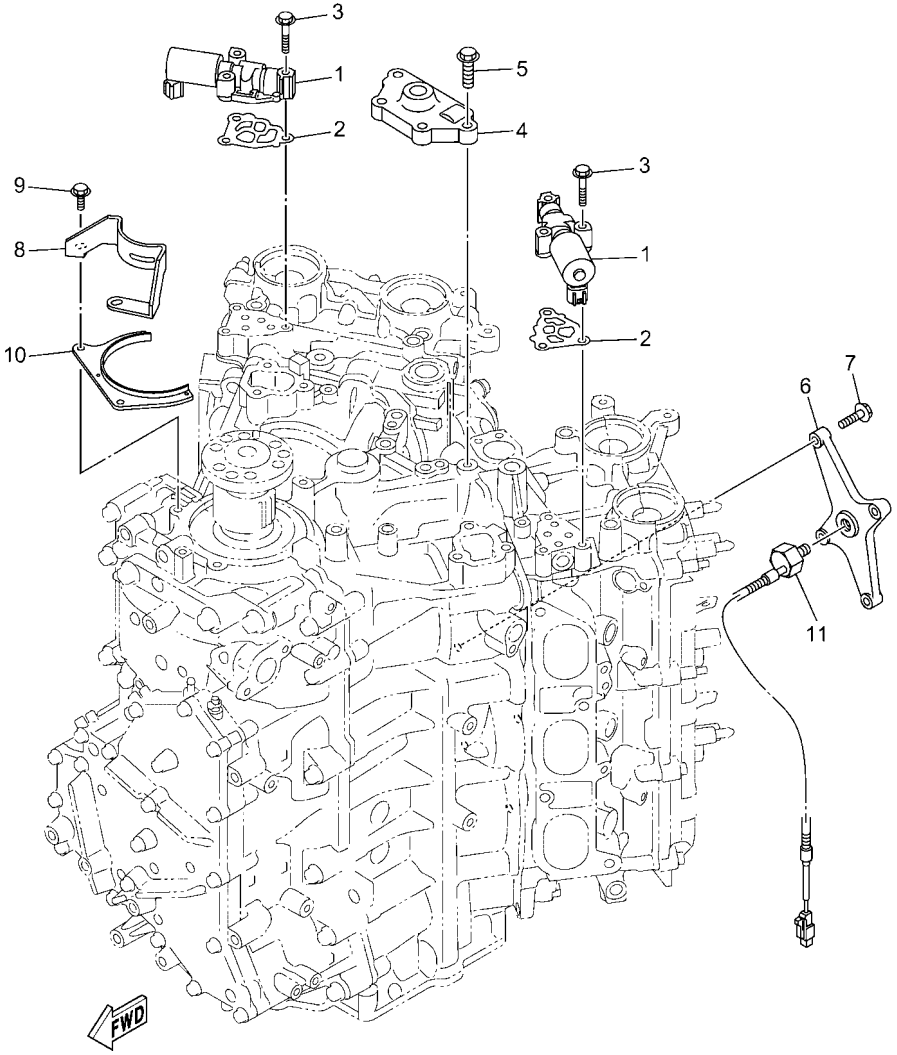

6ML1100-Y060

REF. NO.	PART NO. CODIGO Nº	DESCRIPTION DESCRIPCION	6ML1	6MM1				REMARKS OBSERVACIONES
1	6CB–86120–00	SOLENOID VALVE ASSY VALVULA SOLENOIDE CONJ.	2	2				
2	6CB–1242F–00	GASKET, FILTER EMPAQUE DE FILTRO	2	2				
3	90105–06035	BOLT, FLANGE TORNILLO	6	6				
4	6CB–15544–00	STAY 1 SOPORTE 1	1	1				
5	90105–08178	BOLT, FLANGE TORNILLO	4	4				
6	6CB–1135A–00	BRACKET SOPORTE	1	1				
7	90105–06037	BOLT, FLANGE TORNILLO	4	4				
8	6CB–15142–00	GUIDE 1 GUIA 1.	1	1				
9	90105–06229	BOLT, FLANGE TORNILLO	2	2				
10	6CB–1149A–00	PLATE 1 FLACA 1	1	1				
11	6P2–85780–01	SENSOR, KNOCK CHOCAR SENSORIO	1	1				

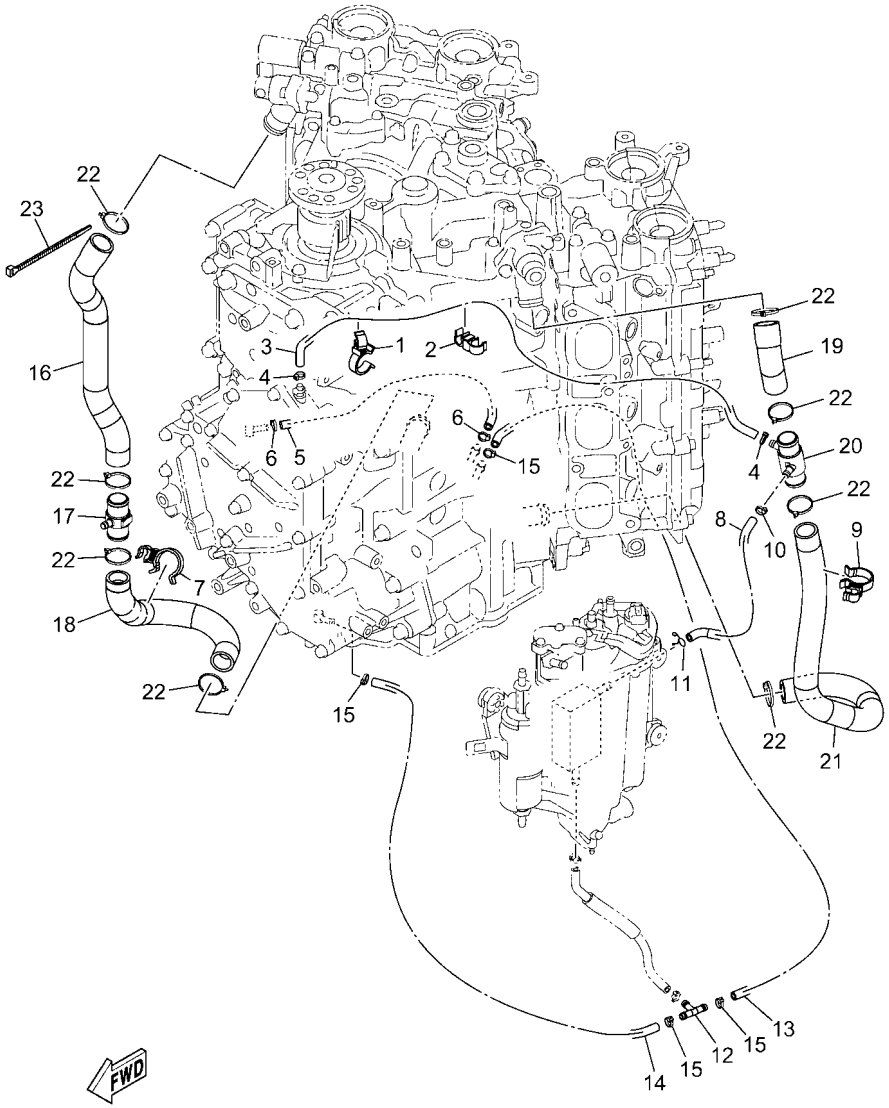

6ML1100-Y070

FIG. 7 CYLINDER & CRANKCASE 4 — CILINDRO & CARTER 4

REF. NO.	PART NO. CODIGO Nº	DESCRIPTION DESCRIPCION	6ML1	6MM1				REMARKS OBSERVACIONES
1	90464–23004	CLAMP BRIDA	1	1				
2	90464–12010	CLAMP BRIDA	1	1				
3	6ML–12579–00	HOSE 4 MANGUERA 4	1	1				
4	90465–11M10	CLAMP BRIDA	2	2				
5	6CB–12577–00	HOSE 2 MANGUERA 2	1	1				
6	90465–11M10	CLAMP BRIDA	2	2				
7	90464–26002	CLAMP BRIDA	1	1				
8	6ML–12484–00	PIPE 4 TUBO 4	1	1				
9	90464–26002	CLAMP BRIDA	1	1				
10	90465–11M10	CLAMP BRIDA	1	1				
11	90467–09M09	CLIP PRESILLA	1	1				
12	688–24378–00	PIPE, JOINT 3 TUBO DE UNION 3	1	1				
13	90445–09120	HOSE (L600) TUBO (L600)	1	1				
14	90445–096H2	HOSE (L280) TUBO (L280)	1	1				
15	90465–11M10	CLAMP BRIDA	4	4				
16	6ML–1244G–00	HOSE, 4 MANGUERA 4	1	1				
17	6CE–24378–00	PIPE, JOINT 3 TUBO DE UNION 3	1	1				
18	6CE–1244H–00	HOSE 5 TUBO 5	1	1				
19	6ML–1244J–00	HOSE 6 TUBO 6	1	1				
20	6ML–24378–00	PIPE, JOINT 3 TUBO DE UNION 3	1	1				
21	6ML–1243E–00	HOSE 2 TUBO 2	1	1				
22	90465–11M59	CLAMP BRIDA	8	8				
23	90465–14M66	CLAMP BRIDA	1	1				

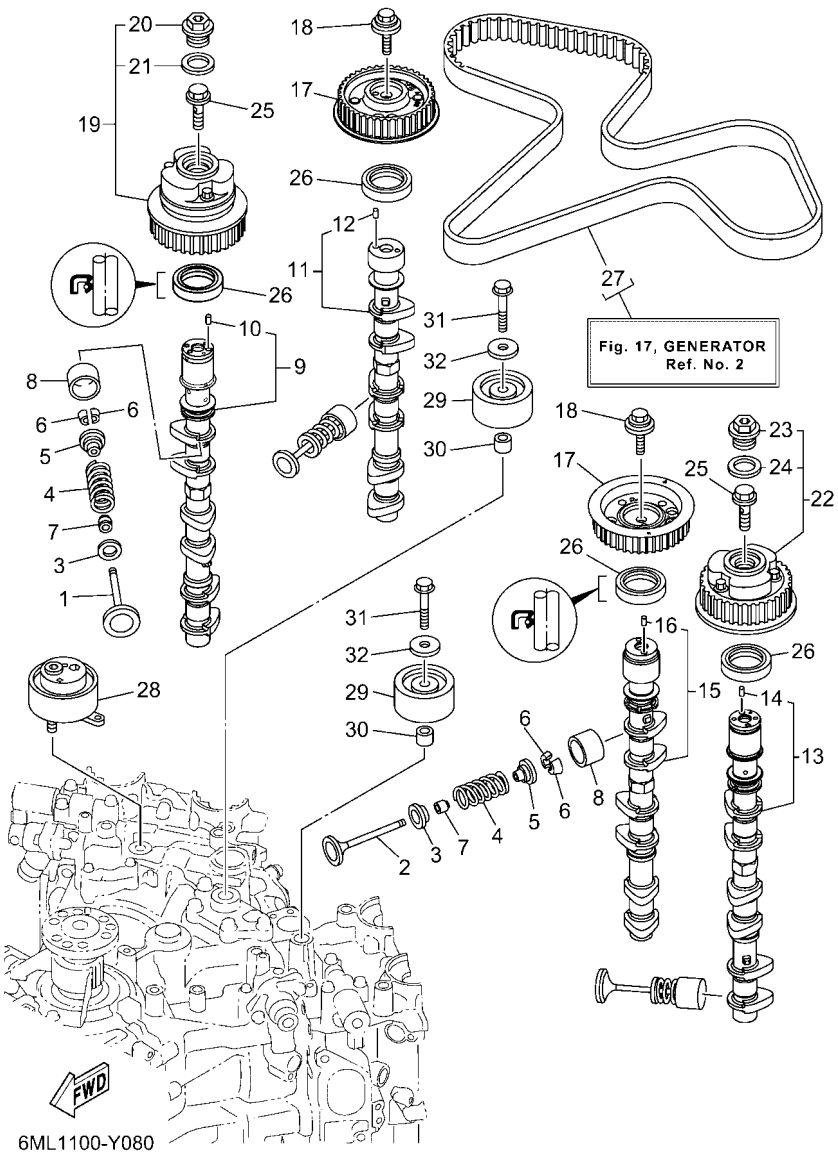

FIG. 8 VALVE — VALVULA

REF. NO.	PART NO. CODIGO Nº	DESCRIPTION DESCRIPCION	6ML1	6MM1				REMARKS OBSERVACIONES
1	6ML–12111–00	VALVE, INTAKE VALVULA DE ADMISION	12	12				
2	6ML–12121–00	VALVE, EXHAUST VALVULA DE ESCAPE	12	12				
3	6ML–12116–00	SEAT, VALVE SPRING ASIENTO RESORTE DE VALVULA	24	24				
4	6ML–12113–00	SPRING, VALVE INNER RESORTE VALVULA INTERNA	24	24				
5	K0F–A3741–00	RETAINER, VALVE SPRING RETEN RESORTE DE VALVULA	24	24				
6	K0F–A3742–00	LOCK, VALVE SPRING RETAINER SEGURO DE VALVULA	48	48				
7	51Y–12119–00	SEAL, VALVE STEM SELLO DE ACEITE VALVULA	24	24				
8	6GR–12153–00	LIFTER, VALVE (3.000) LEVANTADOR DE VALVULA (3.000)	24	24				UR UR
	6GR–12153–10	LIFTER, VALVE (3.025) LEVANTADOR DE VALVULA (3.025)	24	24				UR UR
	6GR–12153–20	LIFTER, VALVE (3.050) LEVANTADOR DE VALVULA (3.050)	24	24				UR UR
	6GR–12153–30	LIFTER, VALVE (3.075) LEVANTADOR DE VALVULA (3.075)	24	24				UR UR
	6GR–12153–40	LIFTER, VALVE (3.100) LEVANTADOR DE VALVULA (3.100)	24	24				UR UR
	6GR–12153–50	LIFTER, VALVE (3.120) LEVANTADOR DE VALVULA (3.120)	24	24				UR UR
	6GR–12153–60	LIFTER, VALVE (3.140) LEVANTADOR DE VALVULA (3.140)	24	24				UR UR
	6GR–12153–70	LIFTER, VALVE (3.160) LEVANTADOR DE VALVULA (3.160)	24	24				UR UR
	6GR–12153–80	LIFTER, VALVE (3.180) LEVANTADOR DE VALVULA (3.180)	24	24				UR UR
	6GR–12153–90	LIFTER, VALVE (3.200) LEVANTADOR DE VALVULA (3.200)	24	24				UR UR
	6GR–12153–A0	LIFTER, VALVE (3.220) LEVANTADOR DE VALVULA (3.220)	24	24				UR UR
	6GR–12153–B0	LIFTER, VALVE (3.240) LEVANTADOR DE VALVULA (3.240)	24	24				UR UR
	6GR–12153–C0	LIFTER, VALVE (3.260) LEVANTADOR DE VALVULA (3.260)	24	24				UR UR
	6GR–12153–D0	LIFTER, VALVE (3.280) LEVANTADOR DE VALVULA (3.280)	24	24				UR UR
	6GR–12153–E0	LIFTER, VALVE (3.300) LEVANTADOR DE VALVULA (3.300)	24	24				UR UR
	6GR–12153–F0	LIFTER, VALVE (3.320) LEVANTADOR DE VALVULA (3.320)	24	24				UR UR
	6GR–12153–G0	LIFTER, VALVE (3.340) LEVANTADOR DE VALVULA (3.340)	24	24				UR UR
	6GR–12153–H0	LIFTER, VALVE (3.360) LEVANTADOR DE VALVULA (3.360)	24	24				UR UR
	6GR–12153–J0	LIFTER, VALVE (3.380) LEVANTADOR DE VALVULA (3.380)	24	24				UR UR
	6GR–12153–K0	LIFTER, VALVE (3.400) LEVANTADOR DE VALVULA (3.400)	24	24				UR UR

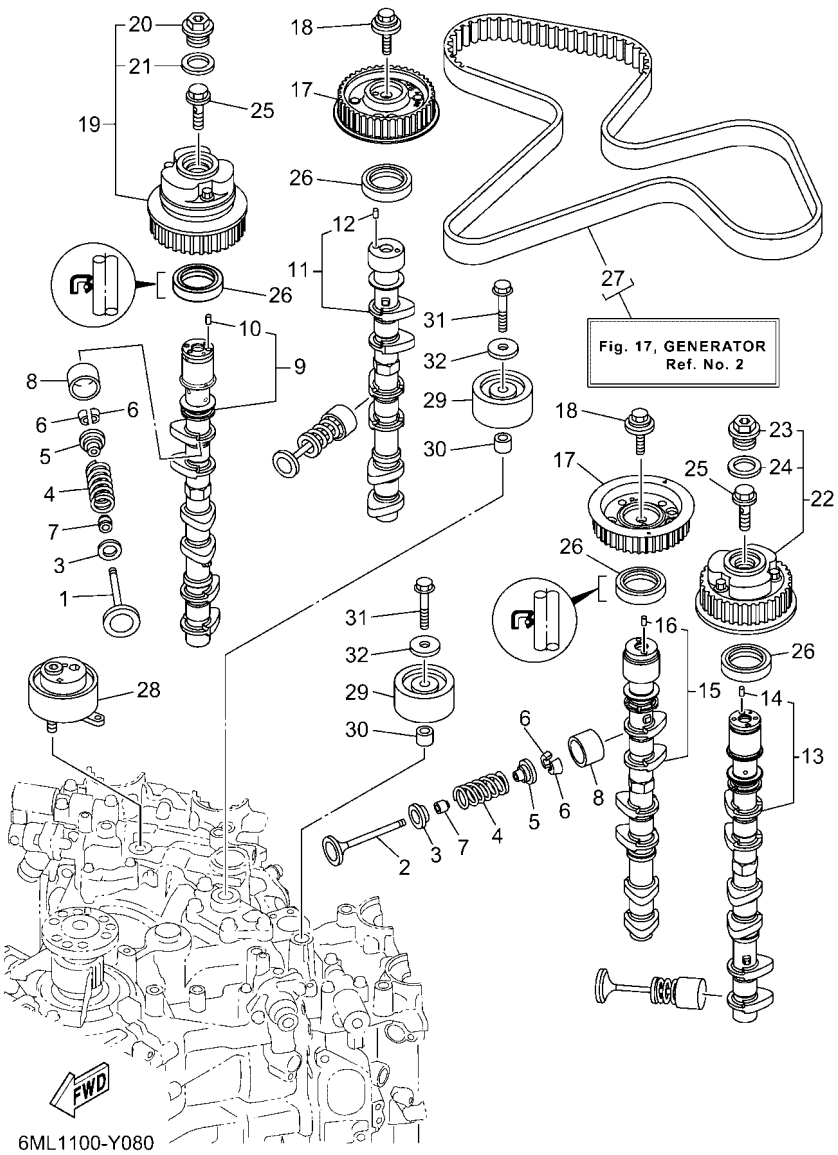

FIG. 8 VALVE — VALVULA

REF. NO.	PART NO. CODIGO Nº	DESCRIPTION DESCRIPCION	6ML1	6MM1				REMARKS OBSERVACIONES
8	6GR–12153–L0	LIFTER, VALVE (3.420) LEVANTADOR DE VALVULA (3.420)	24	24				UR UR
	6GR–12153–M0	LIFTER, VALVE (3.440) LEVANTADOR DE VALVULA (3.440)	24	24				UR UR
	6GR–12153–N0	LIFTER, VALVE (3.460) LEVANTADOR DE VALVULA (3.460)	24	24				UR UR
	6GR–12153–P0	LIFTER, VALVE (3.480) LEVANTADOR DE VALVULA (3.480)	24	24				UR UR
	6GR–12153–R0	LIFTER, VALVE (3.500) LEVANTADOR DE VALVULA (3.500)	24	24				UR UR
	6GR–12153–S0	LIFTER, VALVE (3.520) LEVANTADOR DE VALVULA (3.520)	24	24				UR UR
	6GR–12153–T0	LIFTER, VALVE (3.540) LEVANTADOR DE VALVULA (3.540)	24	24				UR UR
	6GR–12145–00	LIFTER, VALVE (3.560) LEVANTADOR DE VALVULA (3.560)	24	24				UR UR
	6GR–12145–10	LIFTER, VALVE (3.580) LEVANTADOR DE VALVULA (3.580)	24	24				UR UR
	6GR–12145–20	LIFTER, VALVE (3.600) LEVANTADOR DE VALVULA (3.600)	24	24				UR UR
	6GR–12145–30	LIFTER, VALVE (3.625) LEVANTADOR DE VALVULA (3.625)	24	24				UR UR
	6GR–12145–40	LIFTER, VALVE (3.650) LEVANTADOR DE VALVULA (3.650)	24	24				UR UR
	6GR–12145–50	LIFTER, VALVE (3.675) LEVANTADOR DE VALVULA (3.675)	24	24				UR UR
	6GR–12145–60	LIFTER, VALVE (3.700) LEVANTADOR DE VALVULA (3.700)	24	24				UR UR
9	6ML–12171–00	CAMSHAFT 1 ARBOL DE LEVAS 1	1	1				
10	93605–10108	.PIN, DOWEL .PASADOR DE CLAVIJA	1	1				
11	6ML–12181–00	CAMSHAFT 2 ARBOL DE LEVAS 2	1	1				
12	93605–10108	.PIN, DOWEL .PASADOR DE CLAVIJA	1	1				
13	6ML–12172–00	CAMSHAFT 3 ARBOL DE LEVAS 3	1	1				
14	93605–10108	.PIN, DOWEL .PASADOR DE CLAVIJA	1	1				
15	6ML–12182–00	CAMSHAFT 4 ARBOL DE LEVAS 4	1	1				
16	93605–10108	.PIN, DOWEL .PASADOR DE CLAVIJA	1	1				
17	6KA–11567–00	GEAR, DRIVEN 2 ENGRANAJE TRACCION 2	2	2				
18	90119–10050	BOLT, WITH WASHER TORNILLO CON ARANDELA	2	2				
19	6CB–12645–01	PULLEY ASSY 1 POLEA COMPL. 1	1	1				
20	6P2–12623–00	.BOLT .PERNO	1	1				
21	6P2–12663–00	.GASKET .EMPAQUE	1	1				

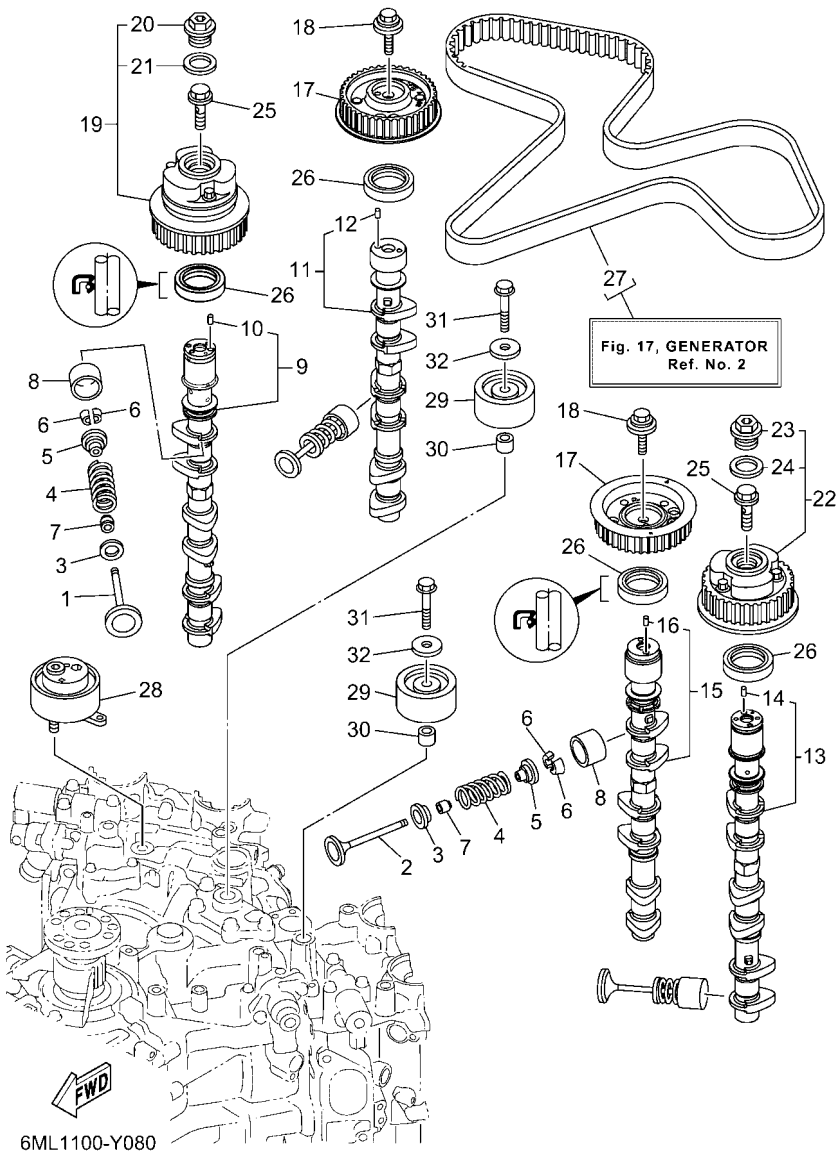

FIG. 8 VALVE — VALVULA

REF. NO.	PART NO. CODIGO Nº	DESCRIPTION DESCRIPCION	6ML1	6MM1				REMARKS OBSERVACIONES
22	6CB–1264A–01	PULLEY ASSY 2 POLEA COMPL. 2	1	1				
23	6P2–12623–00	.BOLT .PERNO	1	1				
24	6P2–12663–00	.GASKET .EMPAQUE	1	1				
25	6P2–12615–00	BOLT PERNO	2	2				
26	93102–38008	OIL SEAL SELLO ACEITE	4	4				
27	6CB–W4624–00	BELT (WITH ROTOR BOLTS) CORREA (CON PERNO)	1	1				
28	6CB–11590–04	TENSIONER ASSY TENSOR COMPLET	1	1				
29	6CB–15512–00	GEAR, IDLER 1 ENGRENAJE NEUTRO	2	2				
30	99530–14016	PIN, DOWEL PASADOR, DE ESPIGA	2	2				
31	90119–10M07	BOLT, WITH WASHER TORNILLO CON ARANDELA	2	2				
32	90201–10M01	WASHER, PLATE ARANDELA PLANA	2	2				

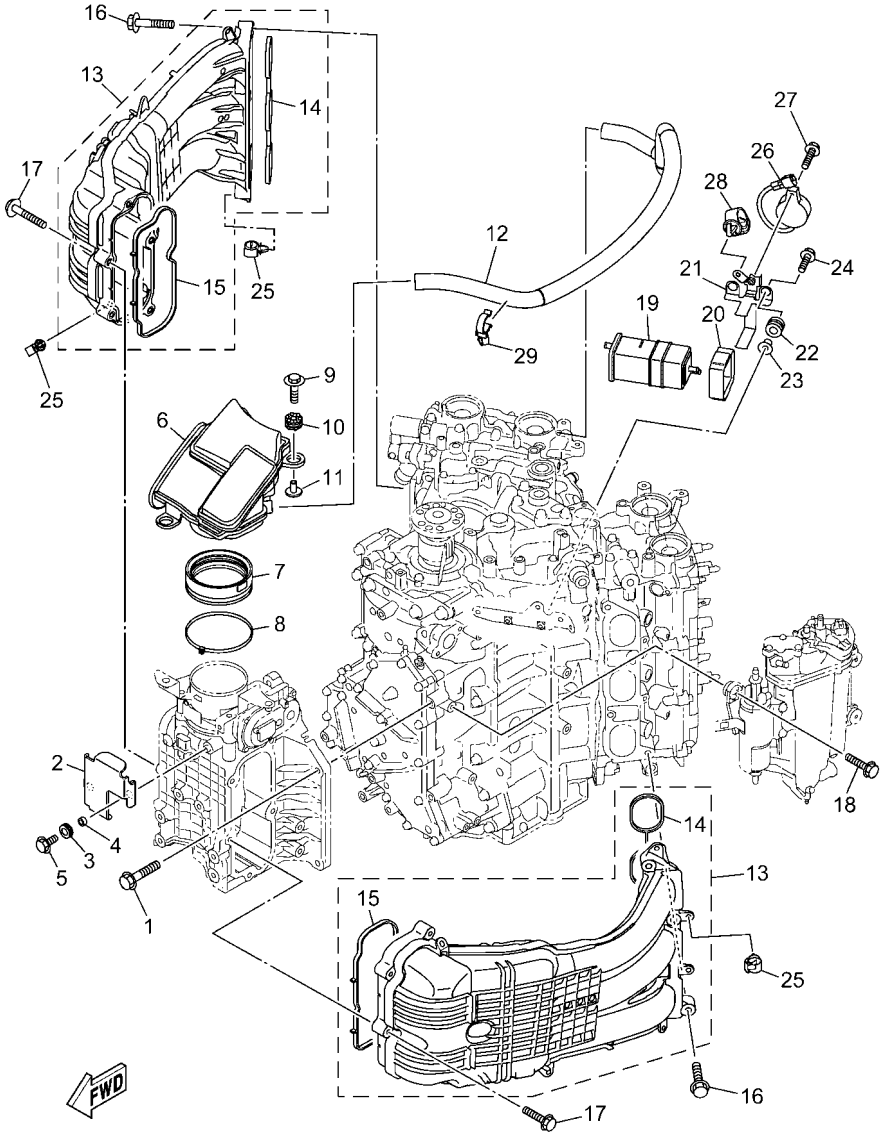

6ML1100-Y090

FIG. 9 INTAKE 1 — ADMISION 1

REF. NO.	PART NO. CODIGO Nº	DESCRIPTION DESCRIPCION	6ML1	6MM1				REMARKS OBSERVACIONES
1	90105–08M87	BOLT, FLANGE TORNILLO	4	4				
2	6ML–13881–00	COVER 1 CUBIERTA 1	1	1				
3	90480–13004	GROMMET TAPON	2	2				
4	90387–07054	COLLAR ESPACIADOR	2	2				
5	95D95–06016	BOLT, FLANGE DEEP RECESS CERROJO, REBORDE HUECO PROFUND	2	2				
6	6ML–14440–00	SILENCER ASSY, INTAKE SILENCIADOR COMPL DE ADMISION	1	1				
7	6AW–1441J–01	PIPE, SILENCER TUBO	1	1				
8	90464–99004	CLAMP BRIDA	1	1				
9	68F–85119–00	BOLT PERNO	2	2				
10	68F–85516–01	SPACER ESPACIADOR	2	2				
11	90387–06176	COLLAR ESPACIADOR	2	2				
12	6ML–15373–00	PIPE, BREATHER MANGUELA DE RESPIRADERO	1	1				
13	6ML–13641–00	MANIFOLD, INTAKE 1 CONECTOR DE ADMISSION 1	2	2				
14	6CB–13645–00	.GASKET, MANIFOLD 1 .EMPAQUE	1	1				
15	6ML–13646–00	.GASKET, MANIFOLD 2 .EMPAQ. DE MULTIPLE 2	1	1				
16	90119–08020	BOLT, WITH WASHER TORNILLO CON ARANDELA	8	8				
17	90119–06MA6	BOLT, WITH WASHER TORNILLO CON ARANDELA	10	10				
18	90119–06299	BOLT, WITH WASHER TORNILLO CON ARANDELA	4	4				
19	69J–24170–00	CANISTER ASSY FRANJA DE DEPOSITO DE COMBUST.	1	1				
20	6FP–2419E–01	COVER, CANISTER CUBIERTA	1	1				
21	6KA–2134X–00	BRACKET, CANISTER SOPORTE	1	1				
22	90480–10M23	GROMMET TAPON	2	2				
23	90387–06289	COLLAR ESPACIADOR	2	2				
24	90119–06309	BOLT, WITH WASHER TORNILLO CON ARANDELA	2	2				
25	90464–13249	CLAMP BRIDA	7	7				
26	6KA–83383–01	BUZZER ZUMBADOR	1	1				
27	90119–05M04	BOLT, WITH WASHER TORNILLO CON ARANDELA	1	1				

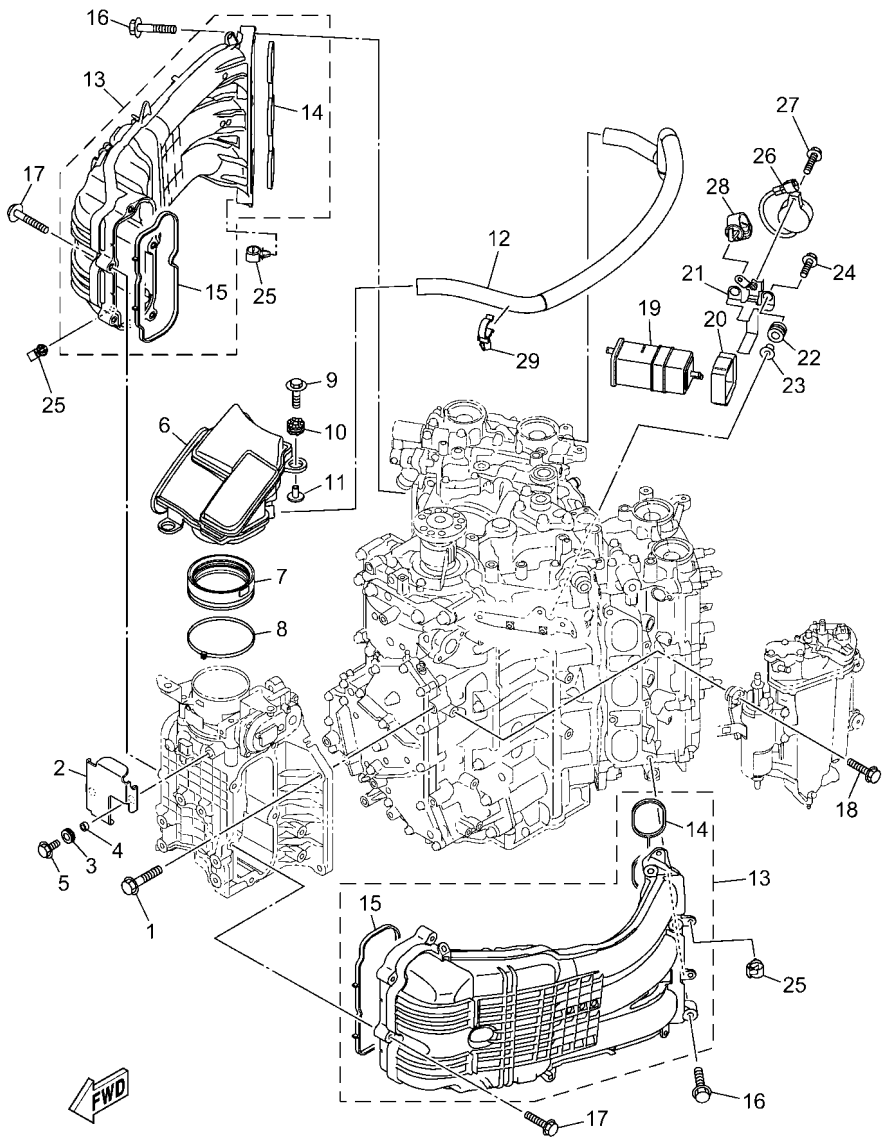

6ML1100-Y090

FIG. 9 INTAKE 1 — ADMISION 1

REF. NO.	PART NO. CODIGO Nº	DESCRIPTION DESCRIPCION	6ML1	6MM1				REMARKS OBSERVACIONES
28	90464–13249	CLAMP BRIDA	1	1				
29	90464–23005	CLAMP BRIDA	1	1				

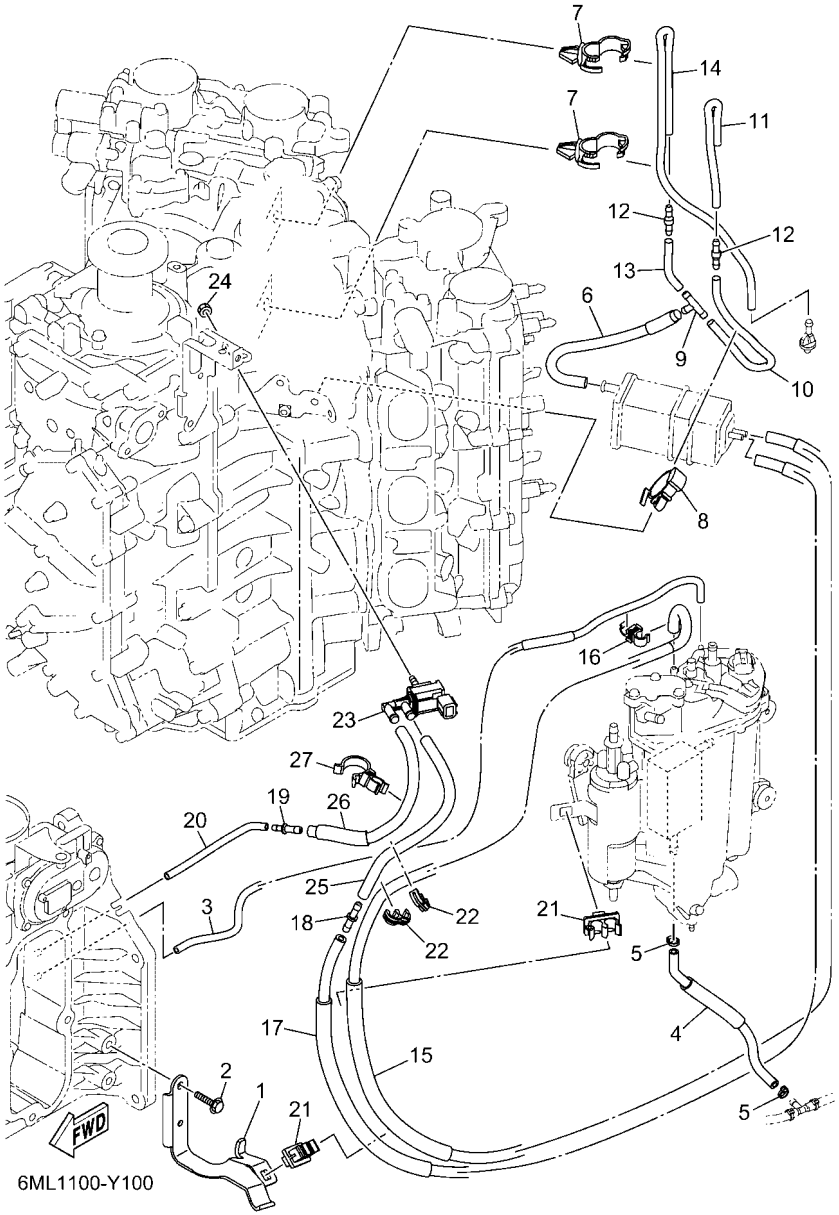

FIG. 10 INTAKE 2 — ADMISION 2

REF. NO.	PART NO. CODIGO Nº	DESCRIPTION DESCRIPCION	6ML1	6MM1				REMARKS OBSERVACIONES
1	6ML–13782–00	STAY SOPORTE	1	1				
2	95D95–06016	BOLT, FLANGE DEEP RECESS CERROJO, REBORDE HUECO PROFUND	2	2				
3	6ML–13532–00	HOSE, VACUUM SENSING 3 MANGUERA, DE VACIO 3	1	1				
4	6ML–12482–00	PIPE 2 TUBO 2	1	1				
5	90465–11M10	CLAMP BRIDA	2	2				
6	6CB–13545–00	HOSE 1 SELLO	1	1				
7	90464–20181	CLAMP BRIDA	2	2				
8	90464–07209	CLAMP BRIDA	1	1				
9	688–24378–00	PIPE, JOINT 3 TUBO DE UNION 3	1	1				
10	6CB–13546–01	HOSE 2 SELLO	1	1				
11	6CB–13547–00	HOSE 3 SELLO	1	1				
12	6E5–21744–00	BREATHER RESPIRADERO	2	2				
13	6CB–13548–00	HOSE, AIR 4 TUBO DE AIRE 4	1	1				
14	6KA–12483–00	PIPE 3 TUBO 3	1	1				
15	6ML–1475A–00	PIPE 1 TUBO 1	1	1				
16	90464–09013	CLAMP BRIDA	1	1				
17	6ML–1475E–00	PIPE 2 TUBO 2	1	1				
18	6G8–24376–00	PIPE, JOINT 1 TUBO DE UNION 1	1	1				
19	6EK–14989–00	ORIFICE, AIR VENT ORIFICIO DE VENTILACION	1	1				
20	6ML–1475G–00	PIPE 4 TUBO 4	1	1				
21	90464–11012	CLAMP BRIDA	2	2				
22	90464–10M57	CLAMP BRIDA	2	2				
23	6C5–86120–00	SOLENOID VALVE ASSY VALVULA SOLENOIDE CONJ.	1	1				
24	95380–06600	NUT, HEXAGON TUERCA	1	1				
25	6ML–1475F–00	PIPE 3 TUBO 3	1	1				
26	6ML–2416A–00	HOSE TUBO DE COMBUSTIBLE	1	1				
27	90464–23001	CLAMP BRIDA	1	1				

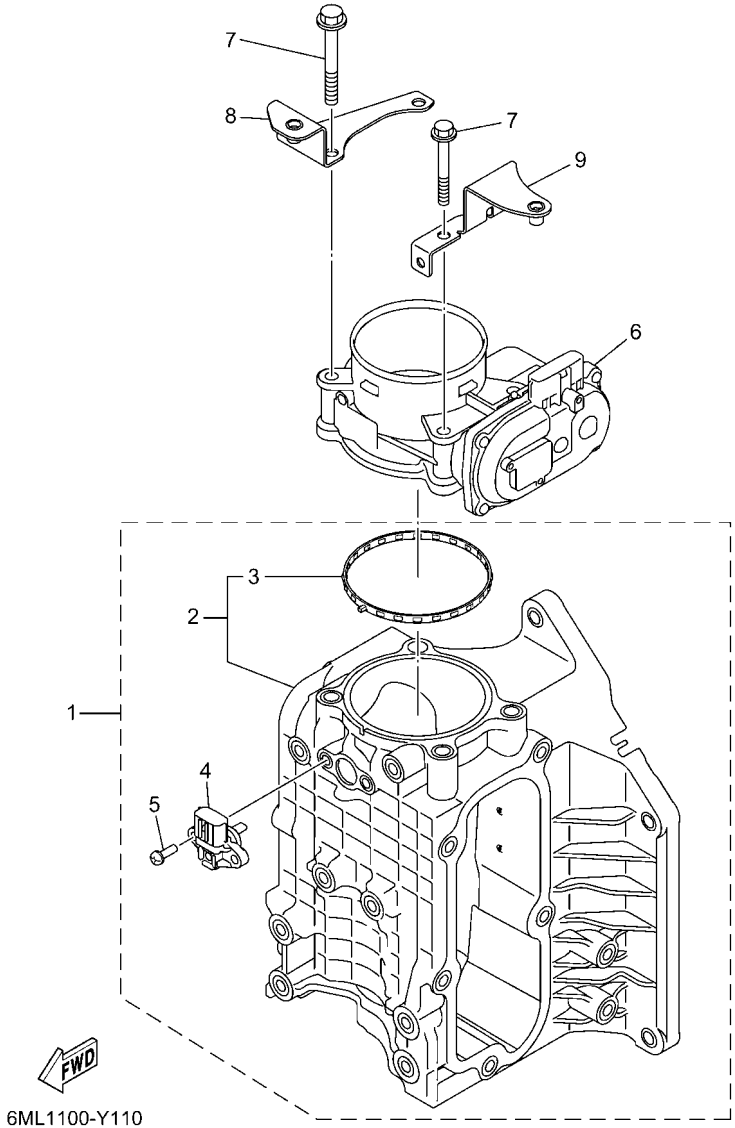

FIG. 11 THROTTLE BODY ASSY 1 — CAJA DE ACELERADOR COMPL 1

REF. NO.	PART NO. CODIGO Nº	DESCRIPTION DESCRIPCION	6ML1	6MM1				REMARKS OBSERVACIONES
1	6ML–13710–00	MIXING ASSY ENSAMBLE DE MEZCLA	1	1				
2	6ML–13711–00	.MIXING BODY .CUERPO DE MEZCLA	1	1				
3	6GR–13556–00	..GASKET, MANIFOLD ..EMPAQUE	1	1				
4	68F–83688–10	.SENSOR ASSY .SENSOR COMP.	1	1				
5	68V–81147–00	.SCREW 3 .TORNILLO 3	2	2				
6	6GR–13751–00	BODY, THROTTLE 1 CAJA 1	1	1				
7	95D75–08060	BOLT, FLANGE DEEP RECESS CERROJO, REBORDE HUECO PROFUND	4	4				
8	6ML–13898–00	HOLDER SOSTEN	1	1				
9	6ML–13898–10	HOLDER SOSTEN	1	1				

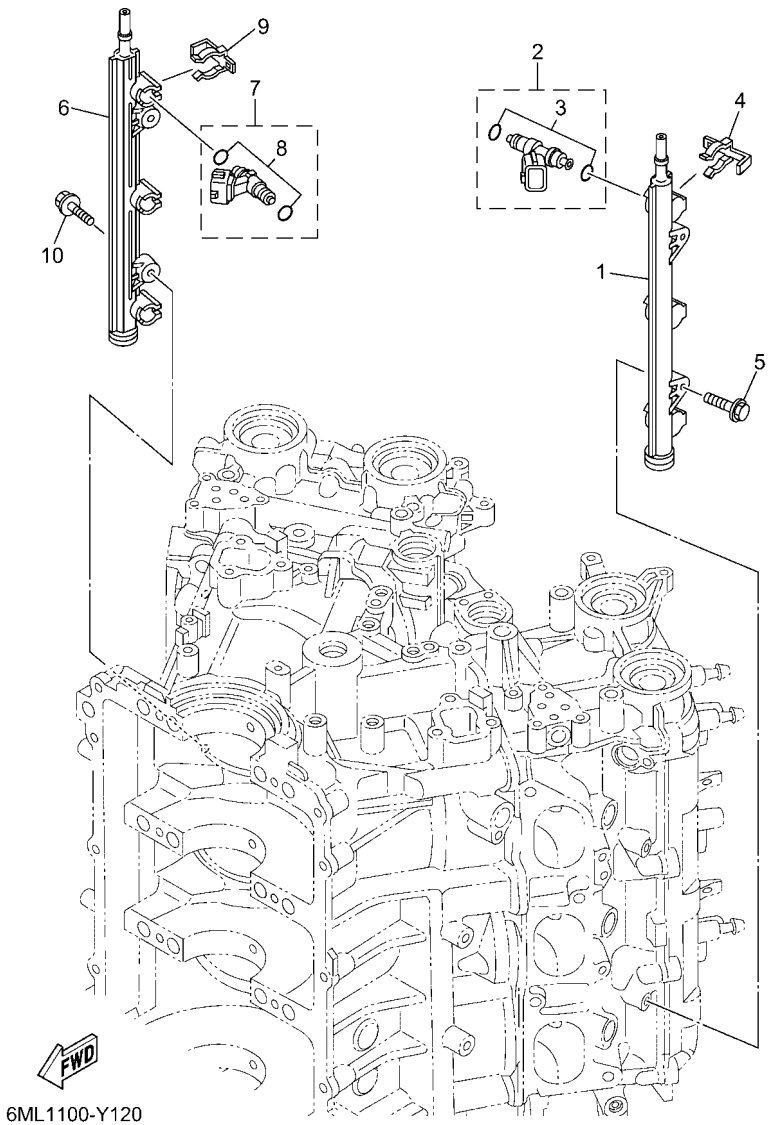

6ML1100-Y120

FIG. 12 THROTTLE BODY ASSY 2 — CAJA DE ACELERADOR COMPL 2

REF. NO.	PART NO. CODIGO Nº	DESCRIPTION DESCRIPCION	6ML1	6MM1				REMARKS OBSERVACIONES
1	6CB–13171–11	PIPE, DELIVERY 2 TUBO CONDUCTOR 2	1	1				
2	6AW–13761–01	INJECTOR INYECTOR	3	3				
3	6AW–1410B–00	.PACKING KIT .JUEGO DE EMPAQUE	1	1				
4	6CB–13577–00	CLIP PRESILLA	3	3				
5	90119–06047	BOLT, WITH WASHER TORNILLO CON ARANDELA	2	2				
6	6CB–13161–11	PIPE, DELIVERY 1 TUBO CONDUCTOR 1	1	1				
7	6AW–13761–01	INJECTOR INYECTOR	3	3				
8	6AW–1410B–00	.PACKING KIT .JUEGO DE EMPAQUE	1	1				
9	6CB–13577–00	CLIP PRESILLA	3	3				
10	90119–06047	BOLT, WITH WASHER TORNILLO CON ARANDELA	2	2				

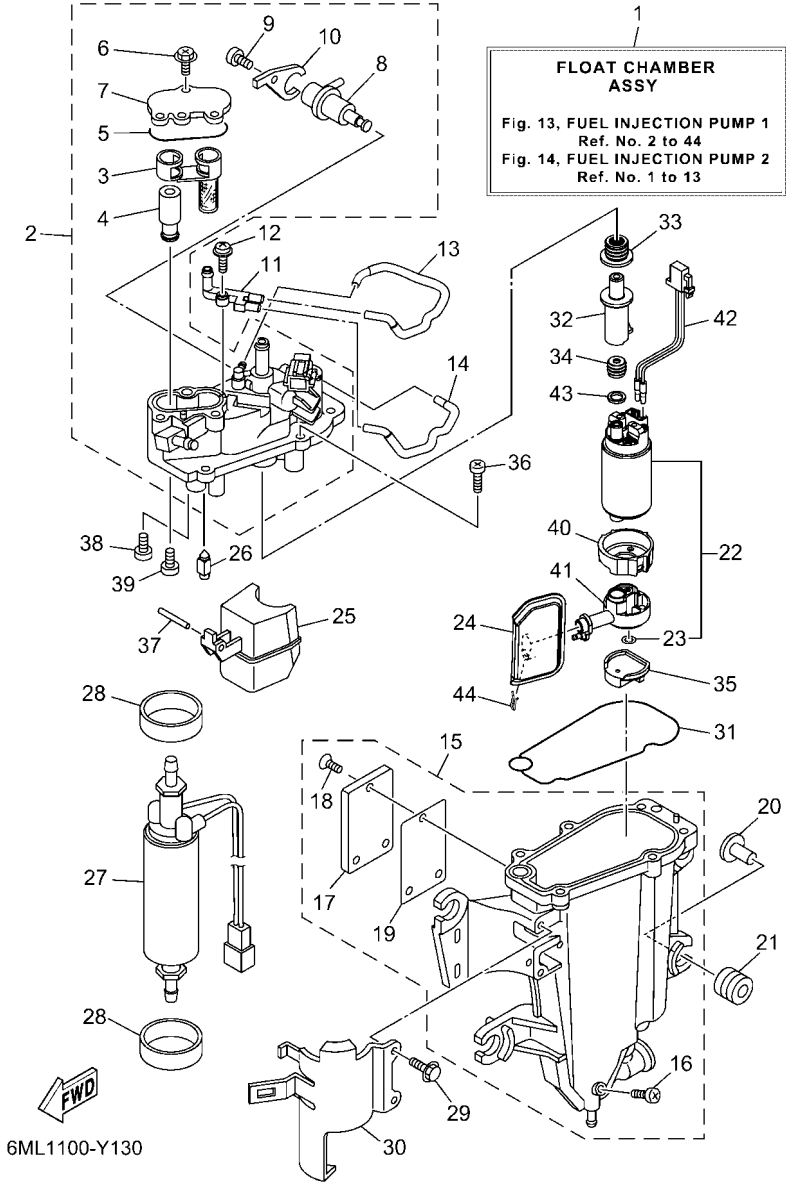

FIG. 13 FUEL INJECTION PUMP 1 — BOMBA DE INYECTOR 1

REF. NO.	PART NO. CODIGO Nº	DESCRIPTION DESCRIPCION	6ML1	6MM1				REMARKS OBSERVACIONES
1	6ML–14180–00	FLOAT CHAMBER ASSY CAMARA DE BOYA COMPLETE	1	1				
2	6ML–14182–00	COVER, FLOAT CHAMBER TAPA DE CAMARA DE BOIA	1	1				
3	6CB–24501–01	.FILTER, FUEL .FIELTRO	1	1				
4	6CB–24460–00	.RELIEF VALVE ASSY .VALVELA DE DESCOMPRESION	1	1				
5	6CB–13016–00	.O-RING .ANILLO O	1	1				
6	6CB–14216–00	.SCREW .TORNILLO	3	3				
7	6CB–24217–00	.COVER .CUBIERTA	1	1				
8	6CB–13906–01	.REGULATOR, PRESSURE .REGULADOR	1	1				
9	6CB–14564–00	.SCREW .TORNILLO	1	1				
10	6DA–14146–00	.PLATE .PLACA SOPORTE	1	1				
11	68V–24379–10	PIPE, JOINT 4 TUBO DE UNION 4	1	1				
12	68V–14216–00	SCREW TORNILLO	1	1				
13	6CB–1475H–00	PIPE 5 TUBO 5	1	1				
14	6CB–1475J–00	PIPE 6 TUBO 6	1	1				
15	6ML–14181–00	BODY, FLOAT CHAMBER 1 CUERPO DE CAMARA DE BOIA	1	1				
16	6P2–14191–00	.PLUG, DRAIN .TORNILLO, DE DRENAJE	1	1				
17	6EK–24452–00	.COVER .CUBIERTA	1	1				
18	6K8–14591–10	.SCREW .TORNILLO	3	3				
19	6CB–24482–00	.GASKET 1 .EMPAQUE 1	1	1				
20	63P–13716–00	COLLAR COLLAR	4	4				
21	6CB–13593–00	DAMPER COJINETE DE RODILLOS	4	4				
22	6ML–W1390–00	FUEL PUMP KIT BOMBA DE COMBUSTIBLE KIT	1	1				
23	6C5–14127–10	.CLIP .PRESILLA	1	1				
24	6LH–13915–00	FILTER FILTRO	1	1				
25	6CB–14985–00	FLOAT BOIA	1	1				
26	6CB–14546–00	VALVE, NEEDLE VALVULA DE AGUJA	1	1				
27	6GR–24410–02	FUEL PUMP ASSY BOMBA DE COMBUSTIBLE COMPLETA	1	1				

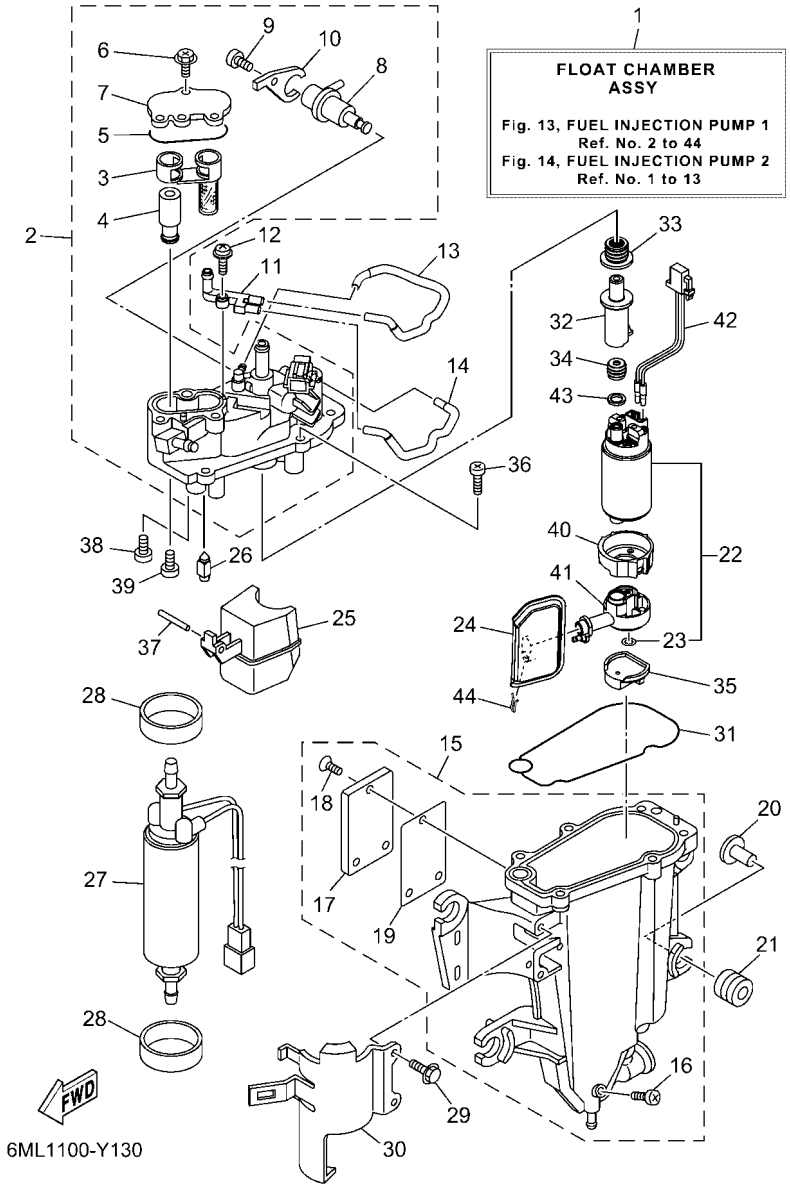

FIG. 13 FUEL INJECTION PUMP 1 — BOMBA DE INYECTOR 1

REF. NO.	PART NO. CODIGO Nº	DESCRIPTION DESCRIPCION	6ML1	6MM1				REMARKS OBSERVACIONES
28	6CB–24492–00	BUSH, FUEL PUMP BUJE	2	2				
29	6CB–24592–00	BOLT TORNILLO	2	2				
30	6CB–24491–00	BRACKET, FUEL PUMP SOPORTE BOMBA COMBUSTIBLE	1	1				
31	6CB–14984–00	GASKET, FLOAT CHAMBER EMPAQUE CAMARA DE BOIA	1	1				
32	6LH–13132–00	JOINT JUNTA	1	1				
33	6LH–1447B–00	BUSH 1 BUJE 1	1	1				
34	6LH–13781–00	DAMPER, PUMP AMORTIGUADOR DE BOMBA	1	1				
35	6LH–13784–00	COVER, PUMP CUBIERTA DE BOMBA	1	1				
36	63P–14567–00	SCREW TORNILLO	6	6				
37	6P2–14386–00	PIN, FLOAT PASADOR DE BOIA	1	1				
38	4SV–24453–00	SCREW TORNILLO	1	1				
39	98507–04008	SCREW, PAN HEAD TORNILLO DE CABEZA CON PLANA	1	1				
40	6LH–24492–00	BUSH, FUEL PUMP BUJE	1	1				
41	6LH–13938–00	PIPE TUBO DE ADMISION	1	1				
42	6LH–87226–00	WIRE HARNESS ASSY CONJUNTO DE CABLES	1	1				
43	6LH–13716–00	COLLAR COLLAR	1	1				
44	6FM–14137–00	CLIP PRESILLA	1	1				

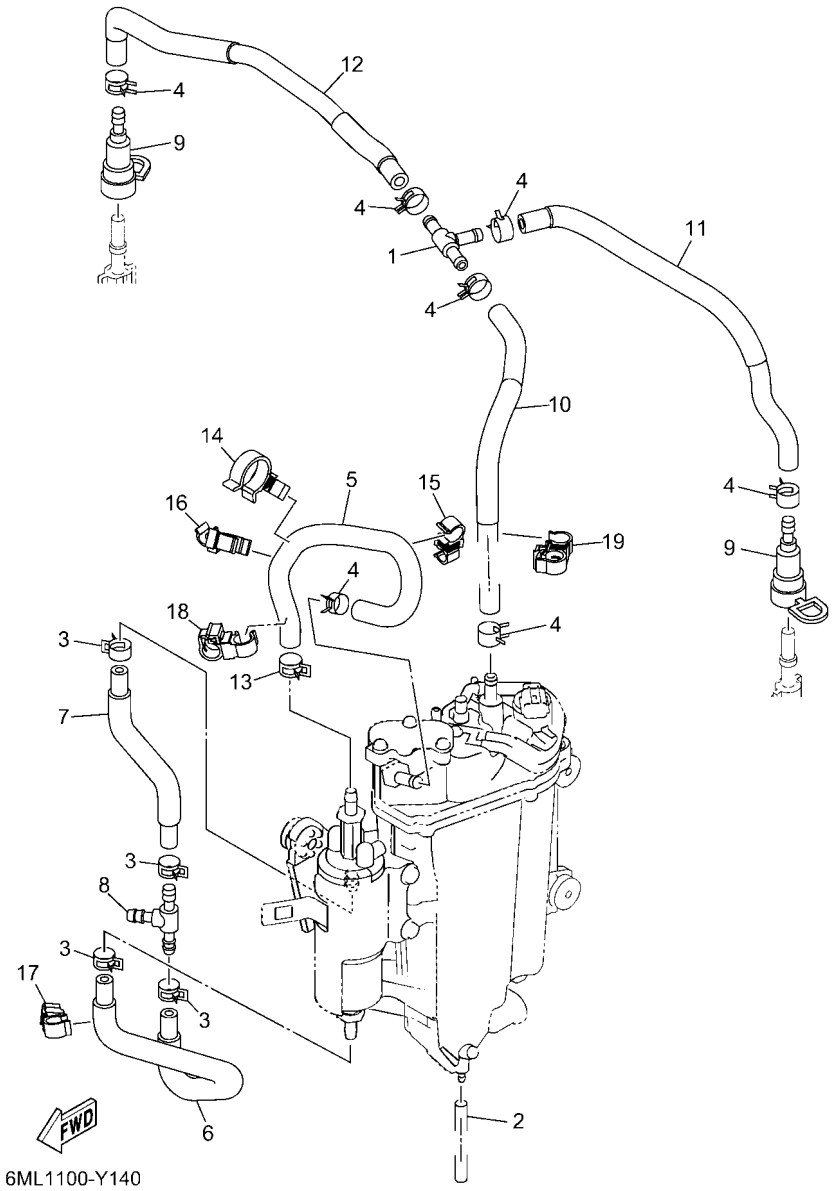

FIG. 14 FUEL INJECTION PUMP 2 — BOMBA DE INYECTOR 2

REF. NO.	PART NO. CODIGO Nº	DESCRIPTION DESCRIPCION	6ML1	6MM1				REMARKS OBSERVACIONES
1	6CB–24461–00	PIPE, JOINT TUBO DE UNION	1	1				
2	6P2–14149–00	PIPE TUBO	1	1				
3	90467–141A2	CLIP PRESILLA	4	4				
4	68V–13577–01	CLIP PRESILLA	7	7				
5	6CB–24324–00	PIPE 13 TUBO 13	1	1				
6	6CB–24317–00	PIPE 7 TUBO 7	1	1				
7	6CB–24323–00	PIPE 12 TUBO 12	1	1				
8	6E5–24378–00	PIPE, JOINT 3 TUBO DE UNION 3	1	1				
9	60E–24300–01	FUEL PIPE JOINT CONECTOR MANGUERA COMBUSTIBLE	2	2				
10	6ML–13971–00	PIPE, FUEL 1 ANILLO DE ESPACIADOR	1	1				
11	6ML–13974–00	PIPE, FUEL 4 TUBO, COMBUSTIBLE 4	1	1				
12	6ML–13972–00	PIPE, FUEL 2 TUBO, COMBUSTIBLE 2	1	1				
13	90467–140A9	CLIP PRESILLA	1	1				
14	90464–23001	CLAMP BRIDA	1	1				
15	90464–12010	CLAMP BRIDA	1	1				
16	90464–13013	CLAMP BRIDA	1	1				
17	90464–12009	CLAMP BRIDA	1	1				
18	90464–12012	CLAMP BRIDA	1	1				
19	90464–12012	CLAMP BRIDA	1	1				

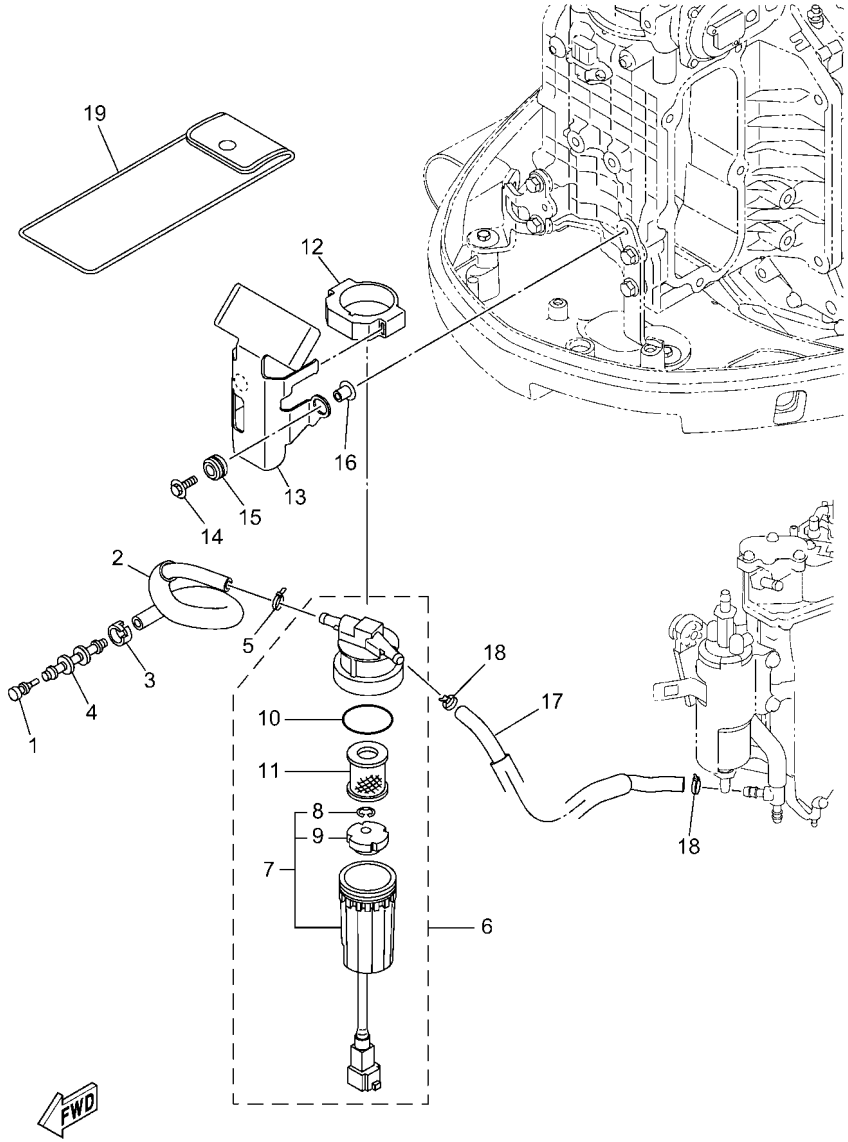

6ML1100-Y150

FIG. 15 FUEL 1 — COMBUSTIBLE 1

REF. NO.	PART NO. CODIGO Nº	DESCRIPTION DESCRIPCION	6ML1	6MM1				REMARKS OBSERVACIONES
1	689–85547–01	DAMPER AMORTIGUADOR	1	1				
2	6ML–24314–00	PIPE 4 TUBO 4	1	1				
3	6E5–24351–51	BAND 1 ABRAZADERA 1	1	1				
4	6AW–24377–01	PIPE, JOINT 2 TUBO DE UNION 2	1	1				
5	90465–11M10	CLAMP BRIDA	1	1				
6	6ML–24560–00	FILTER ASSY FILTRO COMPLETO	1	1				
7	6P3–24562–21	.CUP, FILTER .COPA DE FILTRO	1	1				
8	6P3–24519–00	..CLIP ..PRESILLA	1	1				
9	6P3–24469–00	..FLOAT, WATER LEVEL ..BOIA	1	1				
10	6P3–24564–00	.GASKET .EMPAQUE	1	1				
11	6P3–24563–02	.ELEMENT, FILTER .ELEMENTO DEL FILTRO	1	1				
12	6ML–24568–00	BAND, FILTER BANDA DE FILTO	1	1				
13	6ML–24566–00	BRACKET, FILTER SOPORTE DEL FILTRO	1	1				
14	90119–06310	BOLT, WITH WASHER TORNILLO CON ARANDELA	2	2				
15	90480–10M23	GROMMET TAPON	2	2				
16	90387–06289	COLLAR ESPACIADOR	2	2				
17	6ML–24313–00	PIPE 3 TUBO 3	1	1				
18	90465–11M10	CLAMP BRIDA	2	2				
19	6ML–28100–00	TOOL KIT JUEGO DE HERRAMIENTAS	1	1				AP AP

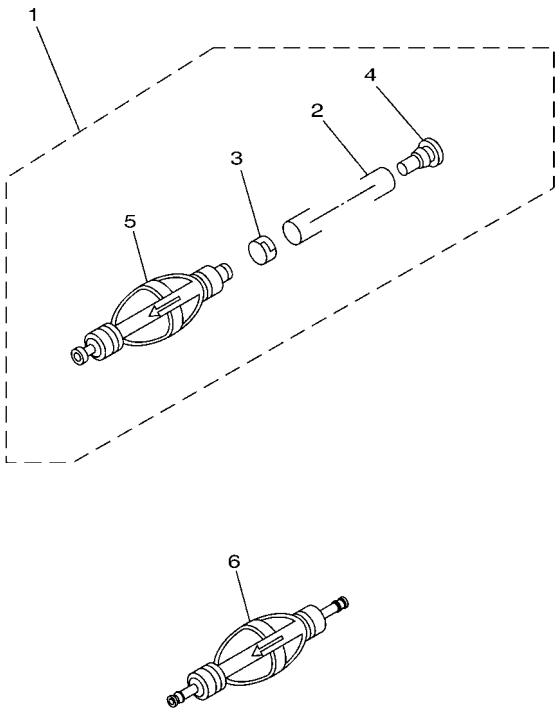

FIG. 16 FUEL 2 — COMBUSTIBLE 2

REF. NO.	PART NO. CODIGO Nº	DESCRIPTION DESCRIPCION	6ML1	6MM1				REMARKS OBSERVACIONES
1	6Y2–24307–52	FUEL PIPE COMP. 2 MANGUERA COMPL,COMBUSTIBLE 2	1	1				AP FOR NME AP FOR NME
2	90445–13M25	.HOSE (L2050) .MANGUERA (L2050)	1	1				
3	6E5–24351–51	.BAND 1 .ABRAZADERA 1	1	1				
4	90480–06M19	.GROMMET .TAPON	1	1				
5	6Y2–24360–60	.PRIMER PUMP ASSY .SOPORTE BOMBA	1	1				
6	6AW–24360–02	PRIMER PUMP ASSY SOPORTE BOMBA	1	1				AP FOR CAR AP FOR CAR

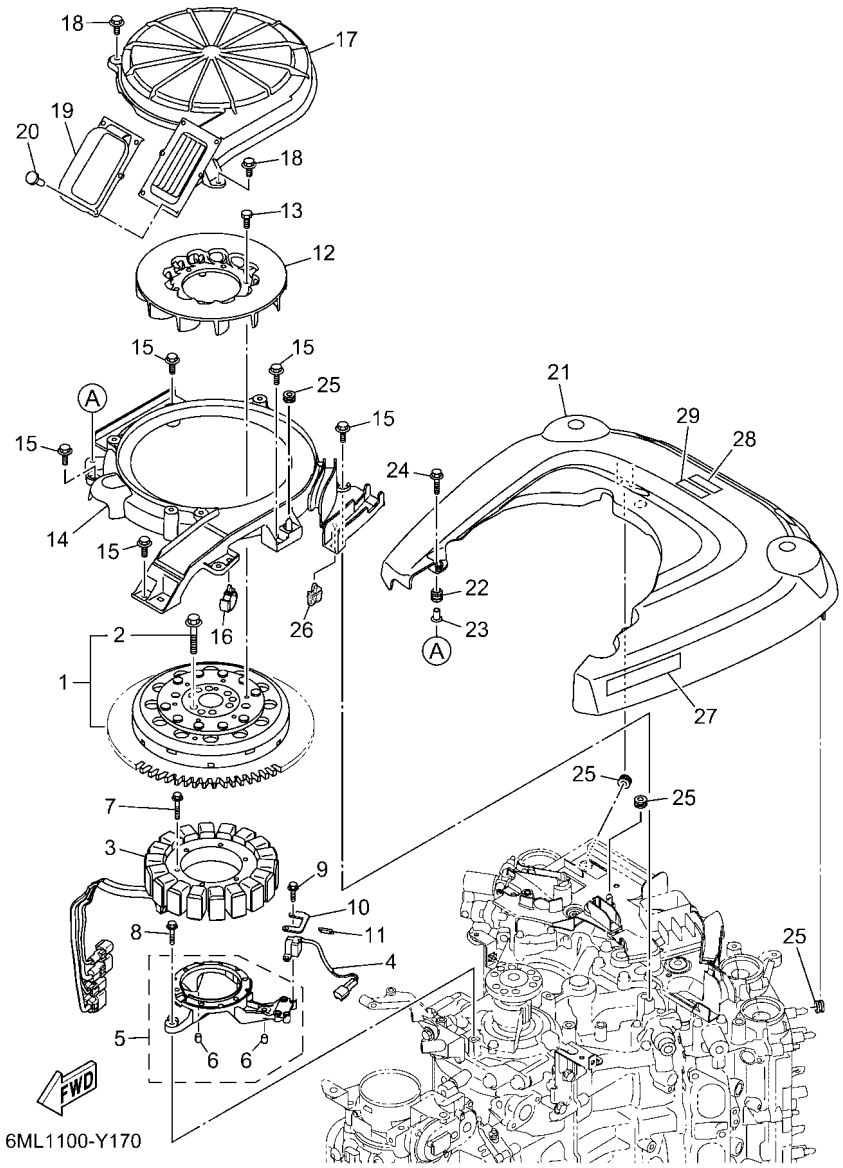

FIG. 17 GENERATOR — GENERADOR

REF. NO.	PART NO. CODIGO Nº	DESCRIPTION DESCRIPCION	6ML1	6MM1				REMARKS OBSERVACIONES
1	6ML–W8145–00	ROTOR ASSY WITH BOLTS ROTOR COMPLETO CON TORNILLO	1	1				
2	6EK–W9010–00	.BOLT SET .JUEGO DE TORNILLO	1	1				
3	6ML–81410–00	STATOR ASSY ESTATOR COMPLETO	1	1				
4	6CB–85580–00	COIL, PULSER BOBINA DE PULSACION	1	1				
5	6CB–85561–00	BASE, MAGNETO BASE DE MAGNETO	1	1				
6	99530–08012	.PIN, DOWEL .PASADOR, DE ESPIGA	2	2				
7	95022–06035	BOLT, FLANGE PERNO, DE BRIDA	6	6				
8	95D95–06030	BOLT, FLANGE DEEP RECESS CERROJO, REBORDE HUECO PROFUND	4	4				
9	90119–05M03	BOLT, WITH WASHER TORNILLO CON ARANDELA	2	2				
10	6ML–85592–00	STAY, PULSER SOPORTE, BOBINA DE PULSACION	1	1				
11	90465–11M10	CLAMP BRIDA	1	1				
12	6ML–85586–00	FAN VENTILADOR	1	1				
13	97E95–06516	BOLT, HEXAGON W/W DEEP RECESS TORNILLO HEXAGONAL CON RONDONA	6	6				
14	6ML–12651–00	AIR SHROUD, CYLINDER 1 CUBIERTA DE PASO DE AIRE 1	1	1				
15	95D95–06016	BOLT, FLANGE DEEP RECESS CERROJO, REBORDE HUECO PROFUND	5	5				
16	90464–12183	CLAMP BRIDA	1	1				
17	6ML–12653–00	AIR SHROUD, CYLINDER 3 CUBIERTA DE PASO DE AIRE 3	1	1				
18	95D95–06012	BOLT, FLANGE DEEP RECESS CERROJO, REBORDE HUECO PROFUND	4	4				
19	6ML–12659–00	DAMPER, AIR SHROUD 2 AMORTIGUADOR DE CUBIERTA 2	1	1				
20	90269–05001	RIVET REMACHE	6	6				
21	6ML–81942–00	COVER CUBIERTA	1	1				
22	6A0–82317–01	DAMPER, IGNITION COIL AMORTIGUADOR BOBINA ENCENDIDO	1	1				
23	90387–06119	COLLAR ESPACIADOR	1	1				
24	95D95–06025	BOLT, FLANGE DEEP RECESS CERROJO, REBORDE HUECO PROFUND	1	1				
25	90480–12314	GROMMET TAPON	4	4				
26	90464–11121	CLAMP BRIDA	1	1				
27	6ML–13437–60	MARK, CAUTION MARKER	1	1				

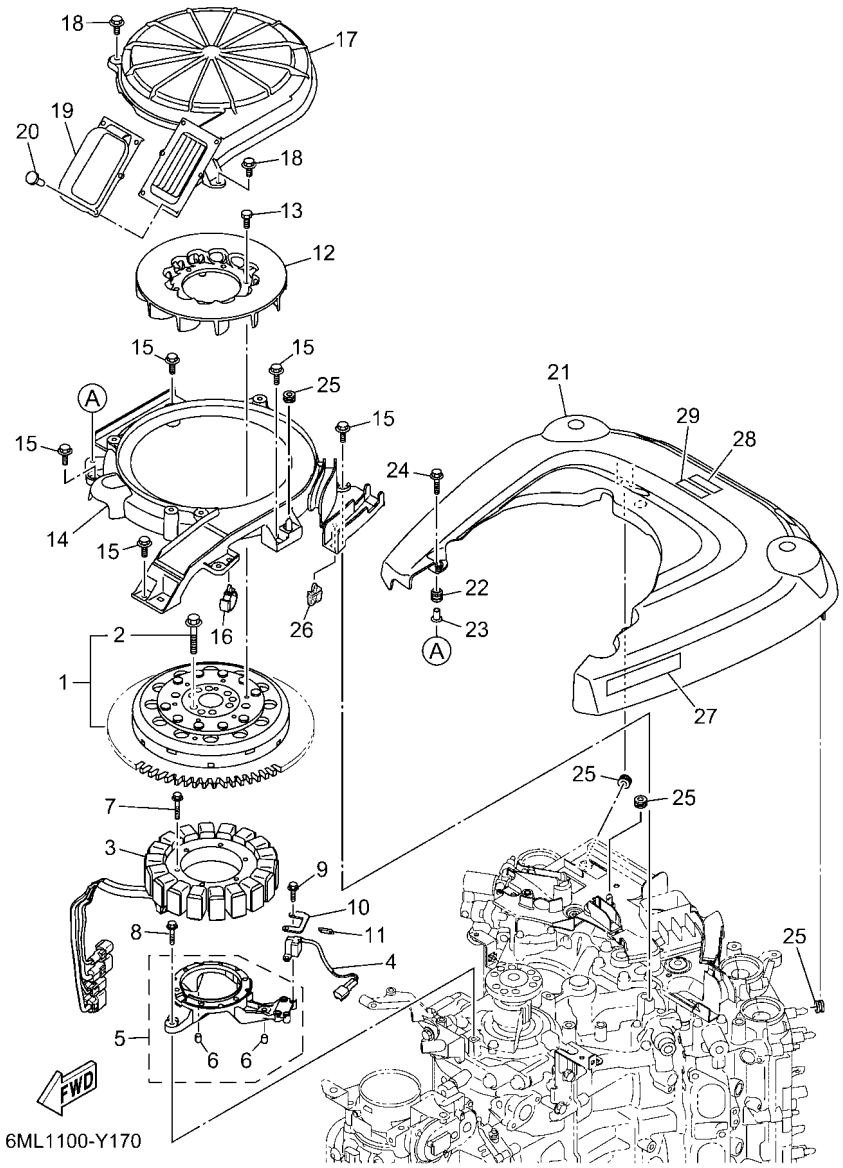

FIG. 17 GENERATOR — GENERADOR

REF. NO.	PART NO. CODIGO Nº	DESCRIPTION DESCRIPCION	6ML1	6MM1				REMARKS OBSERVACIONES
28	6EE–81994–40	LABEL, SAFETY ETIQUETA DE SEGURIDAD	1	1				
29	6EE–81994–50	LABEL, SAFETY ETIQUETA DE SEGURIDAD	1	1				FOR CAR FOR CAR

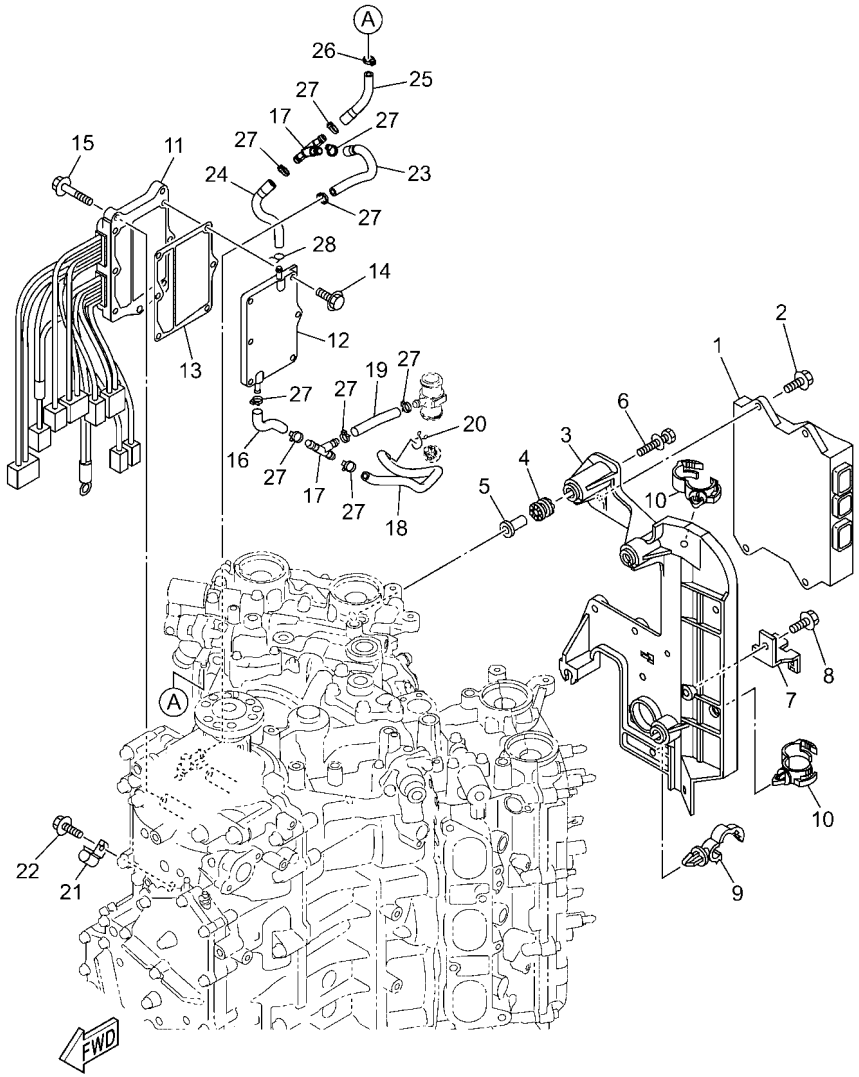

6ML1100-Y180

FIG. 18 ELECTRICAL 1 — EQUIPO ELECTRICO 1

REF. NO.	PART NO. CODIGO Nº	DESCRIPTION DESCRIPCION	6ML1	6MM1				REMARKS OBSERVACIONES
1	6ML–8591A–00	ENGINE CONTROL UNIT ASSY UNIDAD CONTROL	1	1				
2	95D95–06020	BOLT, FLANGE DEEP RECESS CERROJO, REBORDE HUECO PROFUND	4	4				
3	6CB–82316–01	BRACKET, IGNITION COIL SOPORTE BOBINA ENCENDIDO	1	1				
4	64J–85516–01	SPACER ESPACIADOR	4	4				
5	69M–42758–01	COLLAR COLLAR	4	4				
6	90119–06293	BOLT, WITH WASHER TORNILLO CON ARANDELA	4	4				
7	6BR–81845–00	PLATE PLACA	1	1				
8	95D95–06012	BOLT, FLANGE DEEP RECESS CERROJO, REBORDE HUECO PROFUND	1	1				
9	90464–13249	CLAMP BRIDA	1	1				
10	90464–20181	CLAMP BRIDA	2	2				
11	6CE–81960–10	RECTIFIER & REGULATOR ASSY RECTIFICADOR Y REGULADOR	1	1				
12	6CE–81972–00–9S	COVER, RECTIFIER CUBIERTA DE RECTIFICADOR	1	1				
13	6CE–81975–00	PLATE, RECTIFIER FITTING PLACA ACCESORIA RECTIF.	1	1				
14	90119–06MA3	BOLT, WITH WASHER TORNILLO CON ARANDELA	6	6				
15	95D95–06025	BOLT, FLANGE DEEP RECESS CERROJO, REBORDE HUECO PROFUND	3	3				
16	6CE–1248A–00	PIPE 8 TUBO 8	1	1				
17	6CE–24377–00	PIPE, JOINT 2 TUBO DE UNION 2	2	2				
18	6CE–12483–00	PIPE 3 TUBO 3	1	1				
19	90445–107A5	HOSE (L30) TUBO (L30)	1	1				
20	90467–09M09	CLIP PRESILLA	1	1				
21	90462–06013	CLAMP BRIDA	1	1				
22	95023–06012	BOLT TORNILLO	1	1				
23	6ML–14872–00	PIPE 2 TUBO 2	1	1				
24	6ML–12485–00	PIPE 5 TUBO 5	1	1				
25	6ML–12483–00	PIPE 3 TUBO 3	1	1				
26	90465–11M10	CLAMP BRIDA	1	1				
27	90465–11M10	CLAMP BRIDA	9	9				

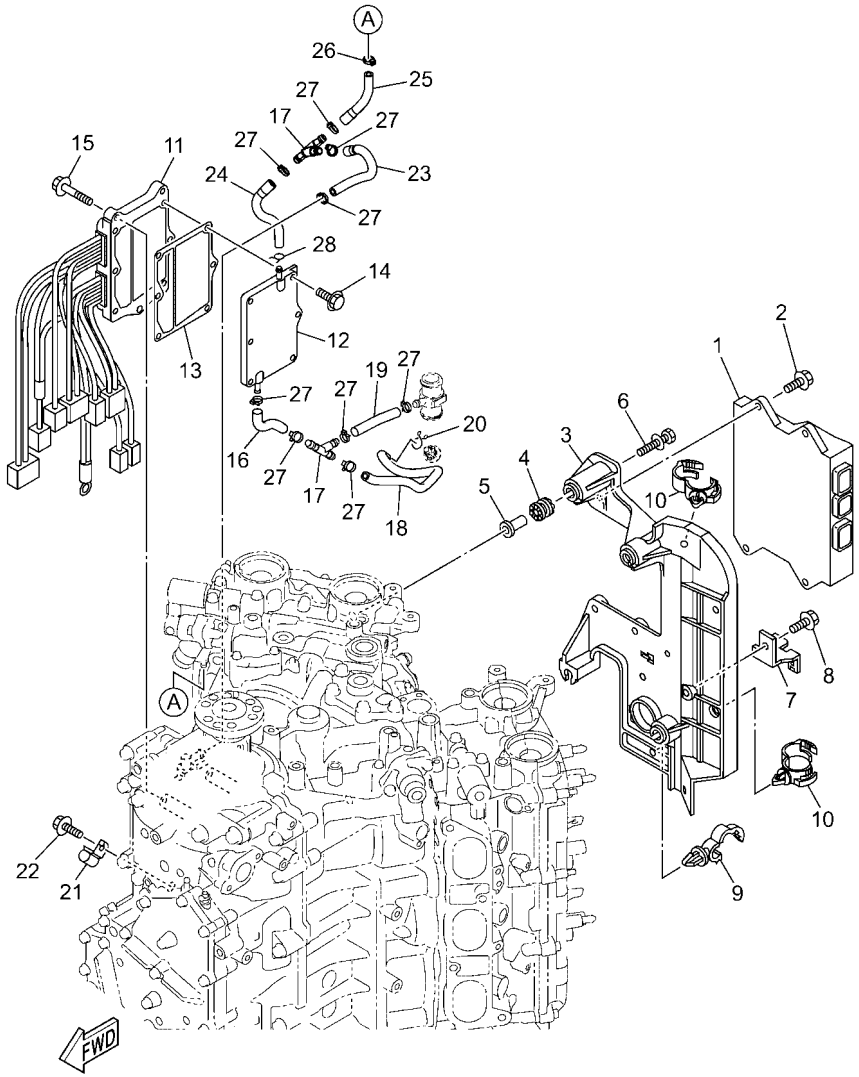

6ML1100-Y180

FIG. 18 ELECTRICAL 1 — EQUIPO ELECTRICO 1

REF. NO.	PART NO. CODIGO Nº	DESCRIPTION DESCRIPCION	6ML1	6MM1				REMARKS OBSERVACIONES
28	90467–08M18	CLIP PRESILLA	1	1				

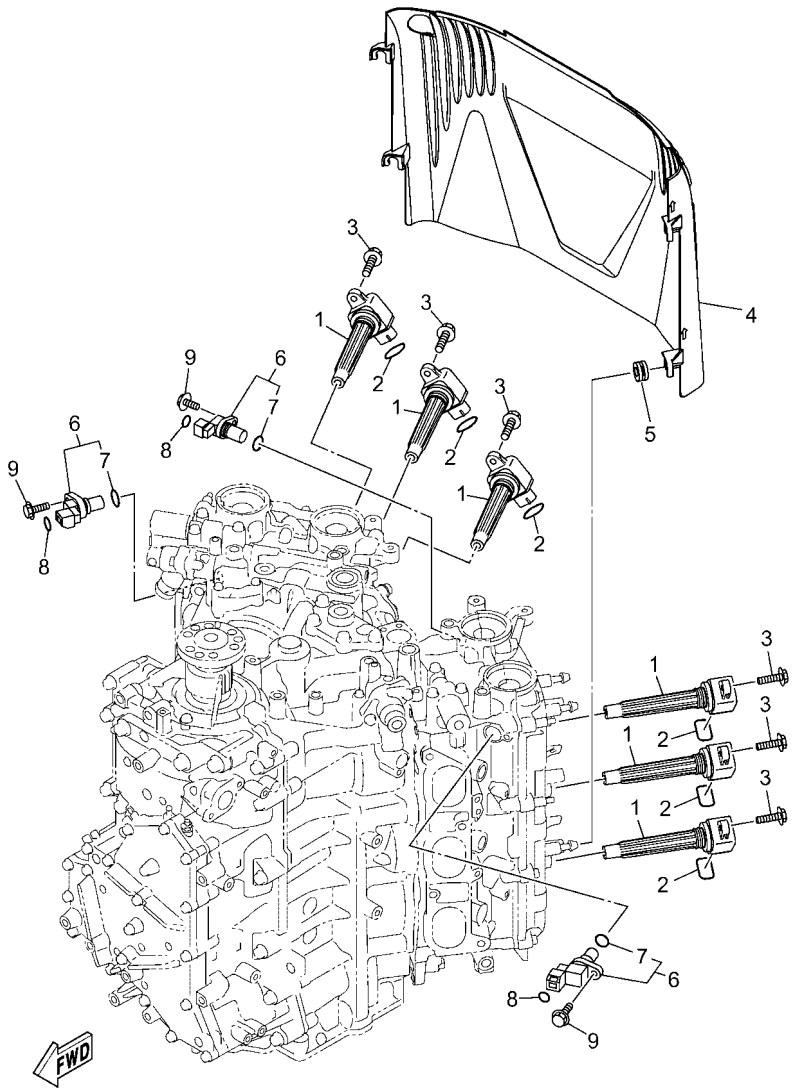

6ML1100-Y190

FIG. 19 ELECTRICAL 2 — EQUIPO ELECTRICO 2

REF. NO.	PART NO. CODIGO Nº	DESCRIPTION DESCRIPCION	6ML1	6MM1				REMARKS OBSERVACIONES
1	6ML–82310–00	IGNITION COIL ASSY BOBINA DE ENCENDIDO COMPLETA	6	6				
2	93210–19001	O-RING ANILLO O	6	6				
3	95D95–06025	BOLT, FLANGE DEEP RECESS CERROJO, REBORDE HUECO PROFUND	6	6				
4	6CB–82314–00	COVER, IGNITION COIL CUBIERTA BOBINA ENCENDIDO	1	1				
5	90480–12314	GROMMET TAPON	4	4				
6	6P2–85896–00	SENSOR, CAM POSITION SENSOR DE LEVA	3	3				
7	6P2–85075–00	.O-RING .ANILLO-O	1	1				
8	93210–11001	O-RING ANILLO O	3	3				
9	97E95–06520	BOLT, HEXAGON W/W DEEP RECESS TORNILLO HEXAGONAL CON RONDONA	3	3				

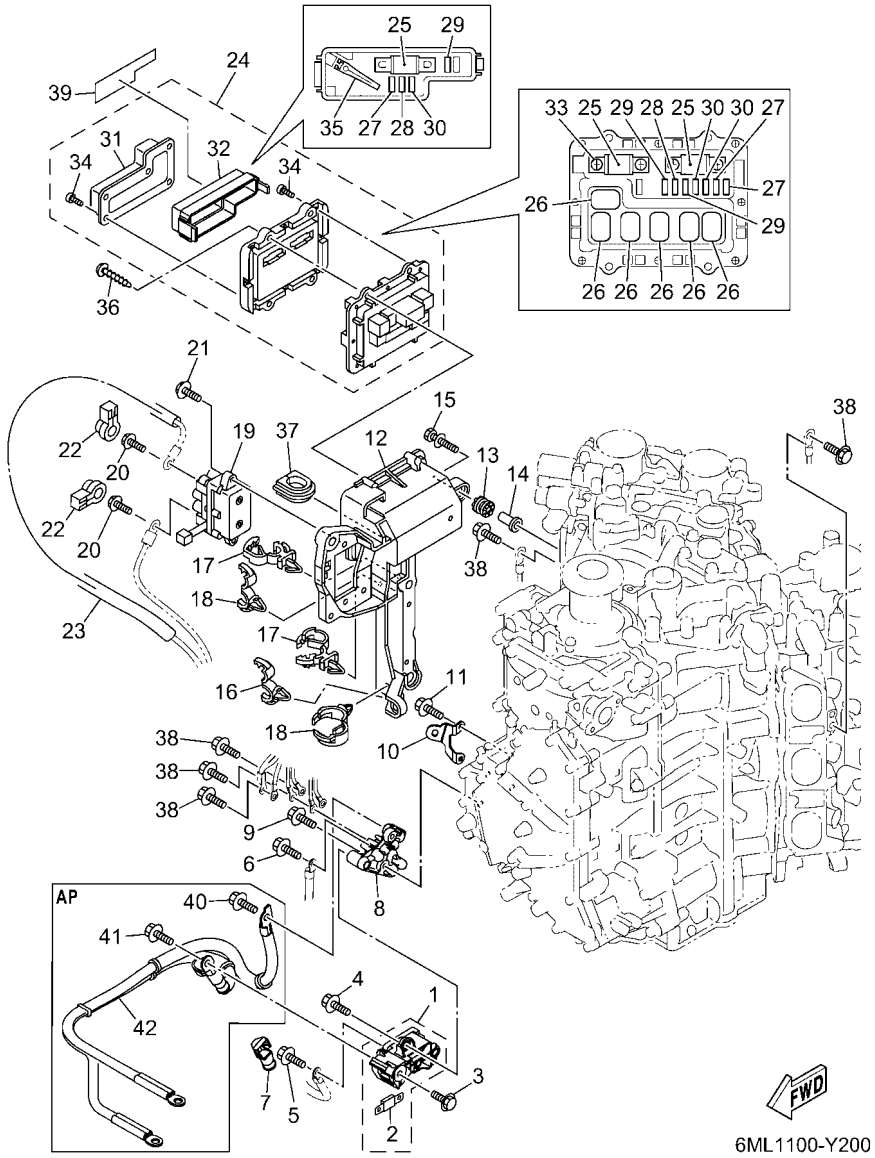

FIG. 20 ELECTRICAL 3 — EQUIPO ELECTRICO 3

REF. NO.	PART NO. CODIGO Nº	DESCRIPTION DESCRIPCION	6ML1	6MM1				REMARKS OBSERVACIONES
1	6KA–81920–00	TERMINAL ASSY TERMINAL COMPLETO	1	1				
2	6GR–82151–00	.FUSE (100A) .FUSIBLE (100A)	2	2				
3	95D95–08016	BOLT, FLANGE DEEP RECESS CERROJO, REBORDE HUECO PROFUND	1	1				
4	95D95–08020	BOLT, FLANGE DEEP RECESS CERROJO, REBORDE HUECO PROFUND	2	2				
5	97E95–06516	BOLT, HEXAGON W/W DEEP RECESS TORNILLO HEXAGONAL CON RONDONA	1	1				
6	97E95–06516	BOLT, HEXAGON W/W DEEP RECESS TORNILLO HEXAGONAL CON RONDONA	1	1				
7	6GR–82119–00	COVER, LEAD WIRE CUBIERTA DE CABLE CONDUCTOR	1	1				
8	6ML–81929–00	BRACKET, TERMINAL SOPORTE	1	1				
9	95D95–06020	BOLT, FLANGE DEEP RECESS CERROJO, REBORDE HUECO PROFUND	2	2				
10	6ML–82588–00	PLATE PLACA	1	1				
11	95D95–06016	BOLT, FLANGE DEEP RECESS CERROJO, REBORDE HUECO PROFUND	2	2				
12	6CB–81948–02	BRACKET SOPORTE	1	1				
13	64J–85516–01	SPACER ESPACIADOR	5	5				
14	69M–42758–01	COLLAR COLLAR	5	5				
15	90119–06293	BOLT, WITH WASHER TORNILLO CON ARANDELA	5	5				
16	90464–13249	CLAMP BRIDA	1	1				
17	90464–12183	CLAMP BRIDA	2	2				
18	90464–20181	CLAMP BRIDA	2	2				
19	6AW–81950–00	RELAY ASSY RELE COMPLETO	1	1				
20	97E95–06610	BOLT, HEXAGON W/W DEEP RECESS TORNILLO HEXAGONAL CON RONDONA	2	2				
21	97513–06520	BOLT, WITH WASHER PERNO CON ARANDELA	2	2				
22	6P2–8183X–00	CAP, TERMINAL CUBIERTA DE TERMINAL	2	2				
23	90446–15006	HOSE (L150) TUBO (L150)	1	1				
24	6ML–82170–00	FUSE BOX ASSY CAJA DE FUSIBLES COMPL.	1	1				
25	6CE–82151–00	.FUSE (100A) .FUSIBLE (100A)	3	3				
26	6AW–8195A–00	.RELAY ASSY .RELE COMPLETO	6	6				
27	67F–82151–40	.FUSE (10A) .FUSIBLE (10A)	3	3				

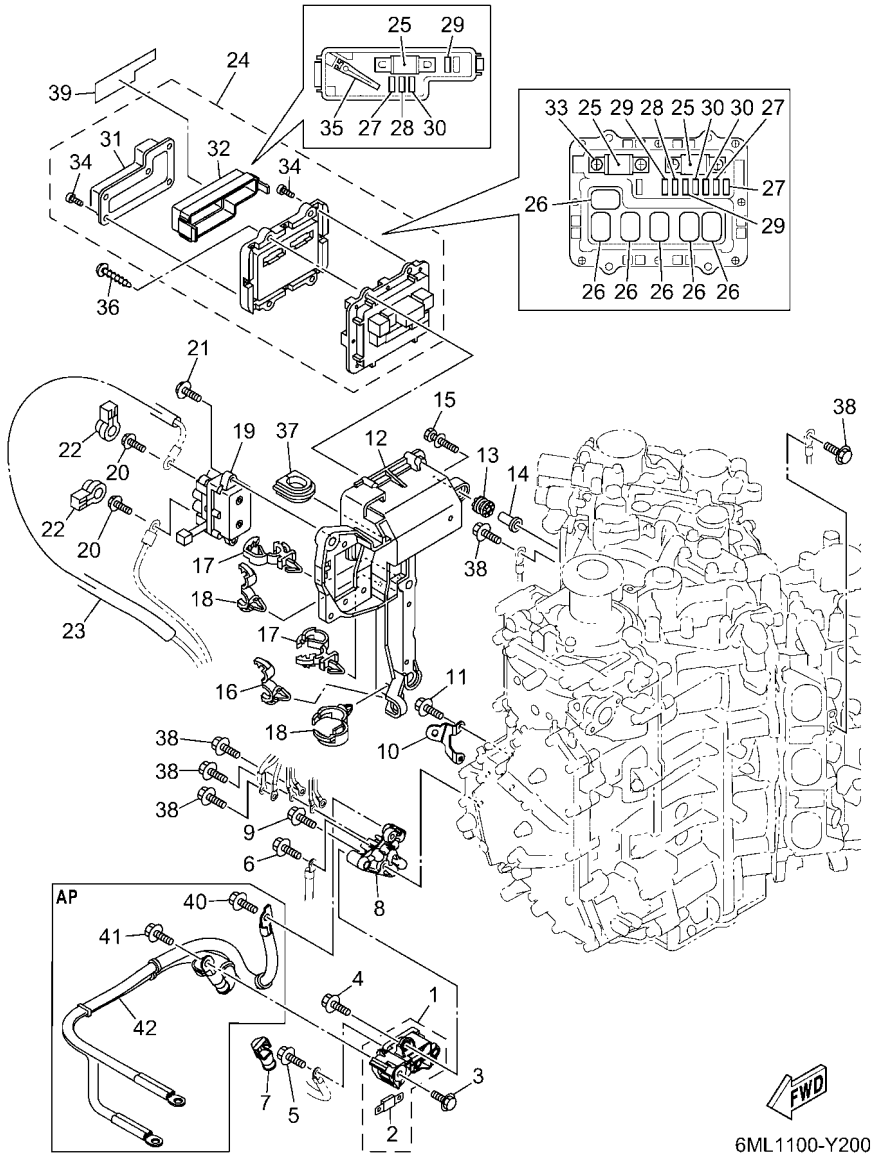

FIG. 20 ELECTRICAL 3 — EQUIPO ELECTRICO 3

REF. NO.	PART NO. CODIGO Nº	DESCRIPTION DESCRIPCION	6ML1	6MM1				REMARKS OBSERVACIONES
28	67F–82151–50	.FUSE (15A) .FUSIBLE (15A)	2	2				
29	67F–82151–00	.FUSE (20A) .FUSIBLE (20A)	3	3				
30	67F–82151–10	.FUSE (30A) .FUSIBLE (30A)	3	3				
31	6CB–81639–10	.COVER .TAPA	1	1				
32	6CB–85544–00	.CASE .CAJA	1	1				
33	68F–82846–00	.SCREW, PAN HEAD (M5) .TORNILLO (M5)	4	4				
34	6P2–82113–00	.SCREW (M3) .TORNILLO (M3)	13	13				
35	67F–2812A–00	.PULLER, FUSE .TIRADOR DE FUSIBLE	1	1				
36	97780–50620	SCREW, TAPPING TORNILLO DE CABEZA DE CONO ACH	4	4				
37	6P2–81336–01	GROMMET TAPON PROTECTOR	1	1				
38	97E95–06516	BOLT, HEXAGON W/W DEEP RECESS TORNILLO HEXAGONAL CON RONDONA	5	5				
39	6ML–81919–00	GRAPHIC, REGULATOR CALCAMONIA DE REGULADOR	1	1				
40	97E95–08516	BOLT, HEXAGON W/W DEEP RECESS TORNILLO HEXAGONAL CON RONDONA	1	1				AP AP
41	97E95–08516	BOLT, HEXAGON W/W DEEP RECESS TORNILLO HEXAGONAL CON RONDONA	1	1				AP AP
42	6ML–82105–00	WIRE HARNESS ARNES DE CABLES	1	1				AP AP

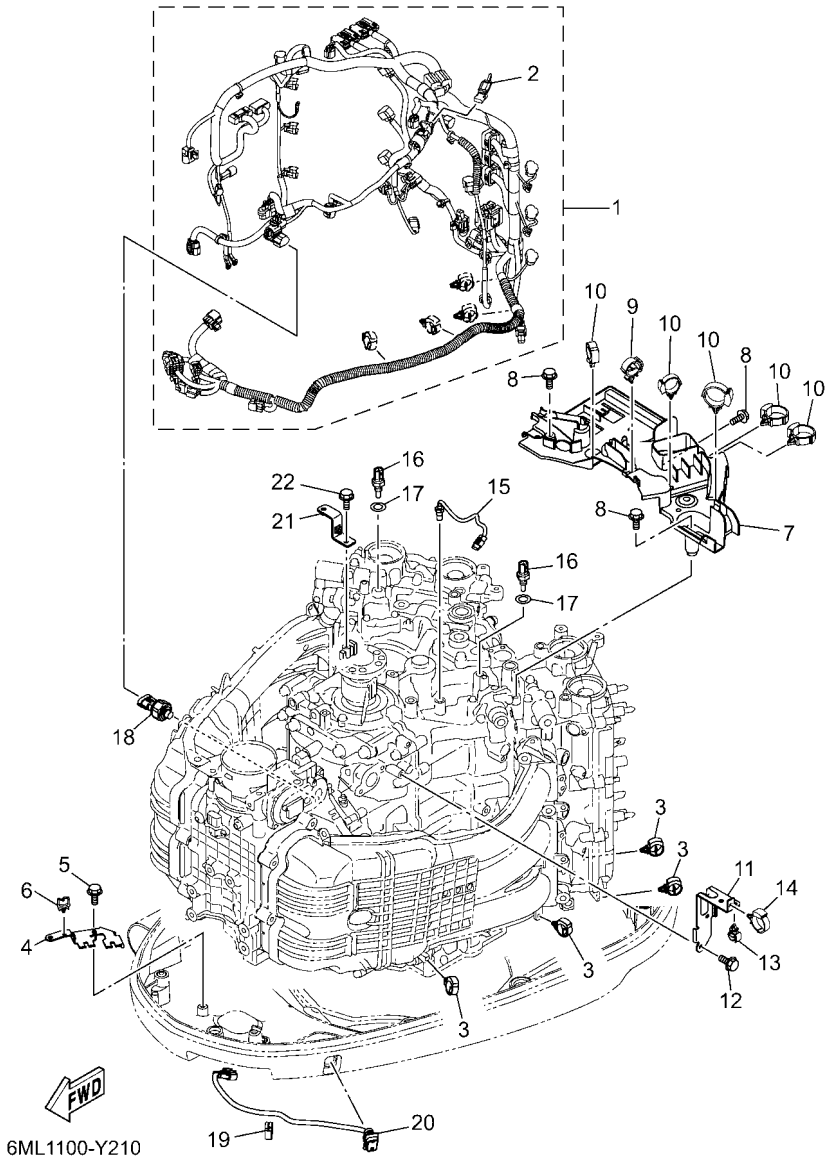

FIG. 21 ELECTRICAL 4 — EQUIPO ELECTRICO 4

REF. NO.	PART NO. CODIGO Nº	DESCRIPTION DESCRIPCION	6ML1	6MM1				REMARKS OBSERVACIONES
1	6ML–82590–00	WIRE HARNESS ASSY CONJUNTO DE CABLES	1	1				
2	6CE–81980–01	.DIODE ASSY .CONJUNTO DIODO	1	1				
3	90464–20181	CLAMP BRIDA	4	4				
4	6ML–82594–00	CLAMP GRAMPA	1	1				
5	95D95–06012	BOLT, FLANGE DEEP RECESS CERROJO, REBORDE HUECO PROFUND	2	2				
6	90464–08004	CLAMP BRIDA	1	1				
7	6ML–82589–00	PROTECTER, WIRE HARNESS PROTECTOR DE ARNES DE CABLE	1	1				
8	95D95–06020	BOLT, FLANGE DEEP RECESS CERROJO, REBORDE HUECO PROFUND	3	3				
9	90464–18246	CLAMP BRIDA	1	1				
10	90464–12183	CLAMP BRIDA	5	5				
11	6ML–82388–00	PLATE PLACA	1	1				
12	95D95–06016	BOLT, FLANGE DEEP RECESS CERROJO, REBORDE HUECO PROFUND	2	2				
13	90464–13249	CLAMP BRIDA	1	1				
14	90464–12183	CLAMP BRIDA	1	1				
15	6CB–85790–00	THERMOSENSOR ASSY TERMICA SENSORIO	1	1				
16	6ML–85790–00	THERMOSENSOR ASSY TERMICA SENSORIO	2	2				
17	90430–10004	GASKET JUNTA	2	2				
18	6AW–83651–01	SENDER, OIL PRESSURE TRASMISOR DE PRESION DE ACEITE	1	1				
19	90464–16001	CLAMP BRIDA	1	1				
20	6GR–82563–00	TRIM & TILT SWITCH ASSY INTERRUPTOR DE INCLINACION	1	1				
21	6CB–81952–00	HOLDER, RELAY SOSTEN DE RELE	1	1				
22	95D95–06016	BOLT, FLANGE DEEP RECESS CERROJO, REBORDE HUECO PROFUND	1	1				

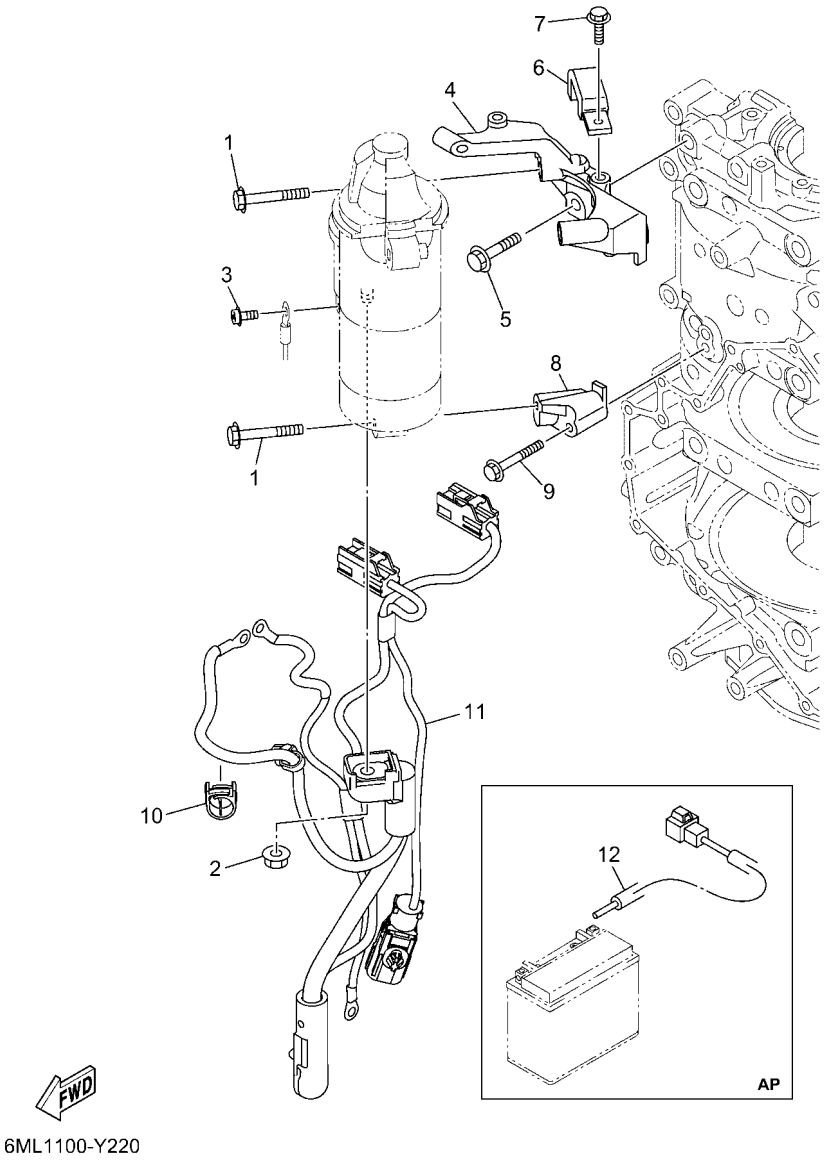

6ML1100-Y220

FIG. 22 ELECTRICAL 5 — EQUIPO ELECTRICO 5

REF. NO.	PART NO. CODIGO Nº	DESCRIPTION DESCRIPCION	6ML1	6MM1				REMARKS OBSERVACIONES
1	97513–08545	BOLT, WITH WASHER PERNO CON ARANDELA	3	3				
2	90179–08003	NUT TUERCA	1	1				
3	97985–04308	SCREW, WITH WASHER TORNILLO, CON ARANDELA	1	1				
4	6ML–81822–00	BRACKET, STARTING MOTOR SOPORTE DE MOTOR DE ARRANQUE	1	1				
5	90105–08M87	BOLT, FLANGE TORNILLO	2	2				
6	6CB–81443–00	CLAMP, LEAD 1 GRAMPA DE CABLE 1	1	1				
7	95D95–06016	BOLT, FLANGE DEEP RECESS CERROJO, REBORDE HUECO PROFUND	1	1				
8	6CB–81823–A0	STAY, STARTING MOTOR SUPORTE	1	1				
9	90105–06151	BOLT, FLANGE TORNILLO	1	1				
10	90464–18004	CLAMP BRIDA	1	1				
11	6KA–8259M–01	WIRE HARNESS ASSY 2 ARNES DE CABLES	1	1				
12	6KW–81949–00	WIRE, LEAD (ISOLATOR, 3.8M) CABLE CONDUCTOR, 3.8M	1	1				AP AP

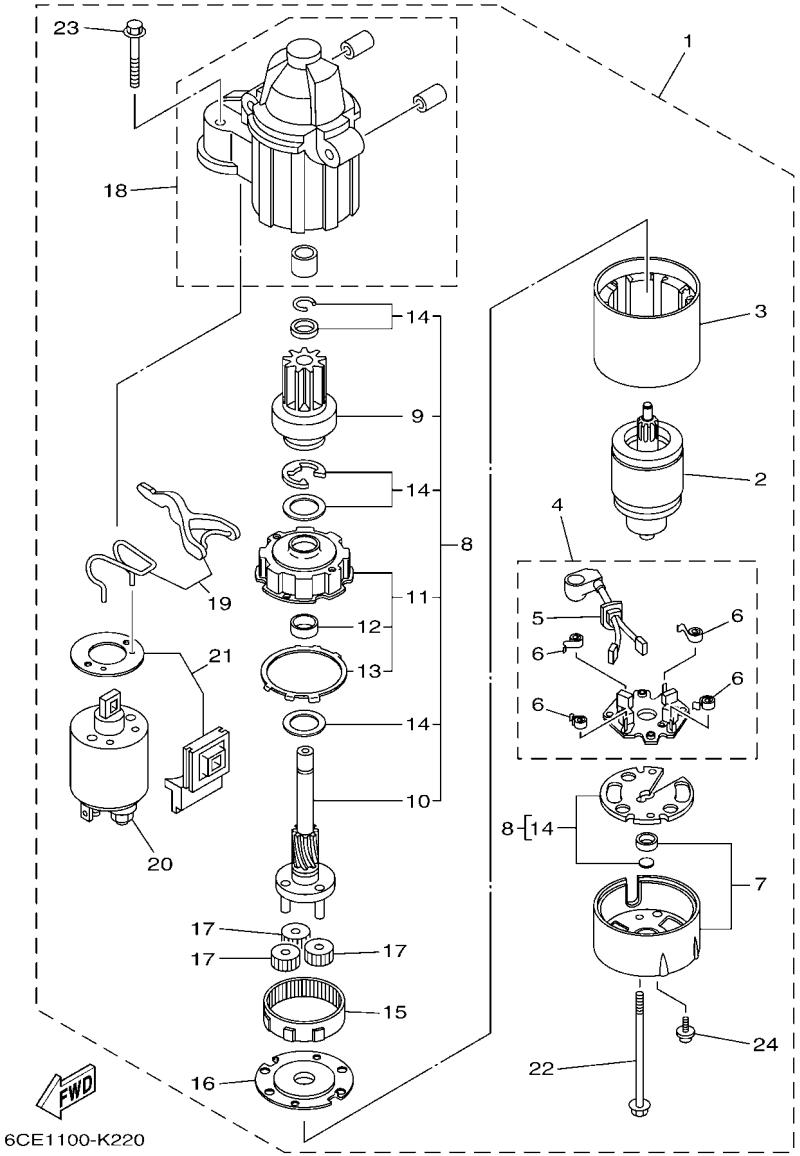

FIG. 23 STARTING MOTOR — MOTOR DE ARRANQUE

REF. NO.	PART NO. CODIGO Nº	DESCRIPTION DESCRIPCION	6ML1	6MM1				REMARKS OBSERVACIONES
1	6CE–81800–02	STARTING MOTOR ASSY MOTOR DE ARRANQUE COMPLETO	1	1				
2	6CE–81850–00	.ARMATURE ASSY .INDUCIDO COMPLETO	1	1				
3	6CE–81810–00	.STATOR ASSY .ESTATOR COMPLETO	1	1				
4	6CE–81840–01	.BRUSH HOLDER ASSY .SOSTEN DE ESCOBILLA COMPLETO	1	1				
5	6CE–81801–01	..BRUSH SET ..JUEGO DE ESCOBILLA	1	1				
6	67F–81813–00	..SPRING, BRUSH ..RESORTE DE ESCOBILLA	4	4				
7	6CE–81820–00	.REAR BRACKET ASSY .CUBIERTA TRASERA COMPL	1	1				
8	6CE–81807–00	.GEAR ASSY, STARTING MOTOR .PINON CONJUNTO	1	1				
9	6CB–81832–00	..CLUTCH, OVER RUN ..PINON COMPL	1	1				
10	6CB–81836–00	..SHAFT, PINION ..ARBOL, PINON	1	1				
11	6CE–81821–00	..BRACKET, CENTER 1 ..SOPORTE, CENTRO 1	1	1				
12	67F–81841–00	...BEARING ...PORTADOR	1	1				
13	67F–8183R–00	...GASKET ...EMPAQUETADURA	1	1				
14	6CB–81809–00	..WASHER KIT ..JUEGO DE ARANDELA	1	1				
15	67F–81891–00	.GEAR, RING .ENGRANAJE ANILLO	1	1				WITH 67F-8183R-00 WITH 67F-8183R-00
16	6CE–81830–00	.BRACKET, CENTER 2 .SOPORTE, CENTRO 2	1	1				
17	60V–8183T–00	.GEAR, IDLER .ENGRENAJE NEUTRO	3	3				
18	6CE–81842–00	.COVER .TAPA	1	1				
19	6CE–81839–00	.LEVER ASSY .PALANCA COMPL.	1	1				
20	6C5–81941–01	.STARTER RELAY ASSY .RELE DE ARRANQUE	1	1				
21	6CE–81869–00	.COVER, DUST .CUBIERTA PARA POLVO	1	1				
22	6CB–81826–00	.BOLT .PERNO	2	2				
23	69J–81828–00	.BOLT 2 .TORNILLO DE EMPUJE 2	2	2				
24	67F–81846–00	.SCREW .TORNILLO	2	2				

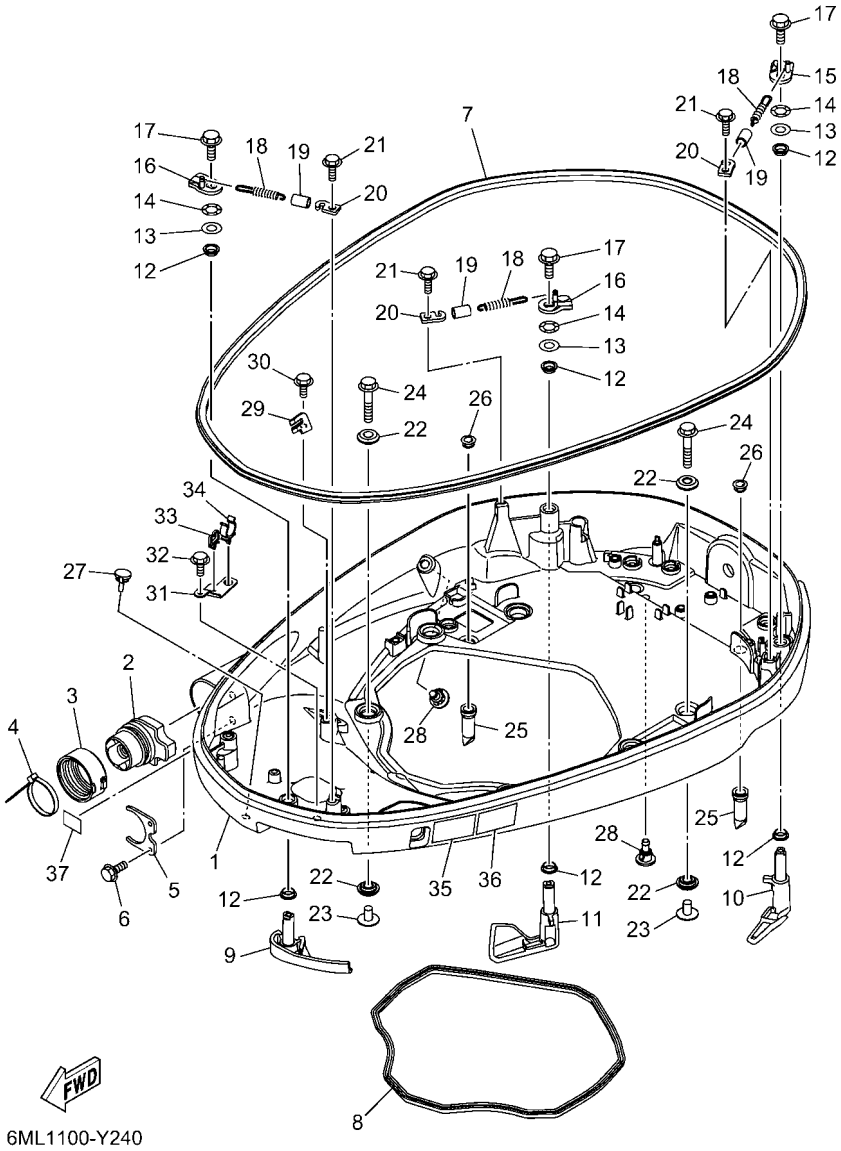

FIG. 24 BOTTOM COWLING 1 — CUBIERTA INFERIOR 1

REF. NO.	PART NO. CODIGO Nº	DESCRIPTION DESCRIPCION	6ML1	6MM1				REMARKS OBSERVACIONES
1	6KA–42710–00–8D	BOTTOM COWLING ASSY CUBIERTA INFERIOR COMPL.	1	1				GRAY GRAY
	6KA–42710–00–CE	BOTTOM COWLING ASSY CUBIERTA INFERIOR COMPL.	1	1				WHITE WHITE
2	6KA–42725–01	GROMMET TAPON	1	1				
3	68F–42753–00	FASTNER TIRADOR	1	1				AP AP
4	90464–20258	CLAMP BRIDA	1	1				AP AP
5	6CB–42761–00	STOPPER RETEN 1	1	1				
6	95D95–06014	BOLT, FLANGE DEEP RECESS CERROJO, REBORDE HUECO PROFUND	2	2				
7	6KA–42615–20	SEAL SELLO	1	1				
8	6CB–42716–01	RUBBER SEAL 1 SELLO DE GOMA 1	1	1				
9	6KA–42815–00–8D	LEVER, CLAMP 1 PALANCA ABRAZADERA 1	1	1				GRAY GRAY
	6KA–42815–00–CE	LEVER, CLAMP 1 PALANCA ABRAZADERA 1	1	1				WHITE WHITE
10	6KA–42816–00–8D	LEVER, CLAMP 2 PALANCA ABRAZADERA 2	1	1				GRAY GRAY
	6KA–42816–00–CE	LEVER, CLAMP 2 PALANCA ABRAZADERA 2	1	1				WHITE WHITE
11	6KA–42817–00–8D	LEVER, CLAMP 3 PALANCA ABRAZADERA 3	1	1				GRAY GRAY
	6KA–42817–00–CE	LEVER, CLAMP 3 PALANCA ABRAZADERA 3	1	1				WHITE WHITE
12	90386–15M73	BUSH BUJE	6	6				
13	90201–156J2	WASHER, PLATE ARANDELA PLANA	3	3				
14	90206–15M18	WASHER, WAVE ARANDELA ONDULADA	3	3				
15	6CB–42818–00	LEVER, CLAMP 4 PALANCA, ABRAZADERA 4	1	1				
16	6CB–42819–00	LEVER, CLAMP 5 PALANCA ABRAZADERA 5	2	2				
17	95D95–08012	BOLT, FLANGE DEEP RECESS CERROJO, REBORDE HUECO PROFUND	3	3				
18	90506–22001	SPRING, TENSION RESORTE DE TENSION	3	3				
19	90445–15M03	HOSE (L23) TUBO (L23)	3	3				
20	66T–43144–00	HOOK, SPRING GANCHO	3	3				
21	95D95–06012	BOLT, FLANGE DEEP RECESS CERROJO, REBORDE HUECO PROFUND	3	3				
22	90480–22M81	GROMMET TAPON	12	12				
23	90387–08M37	COLLAR ESPACIADOR	6	6				

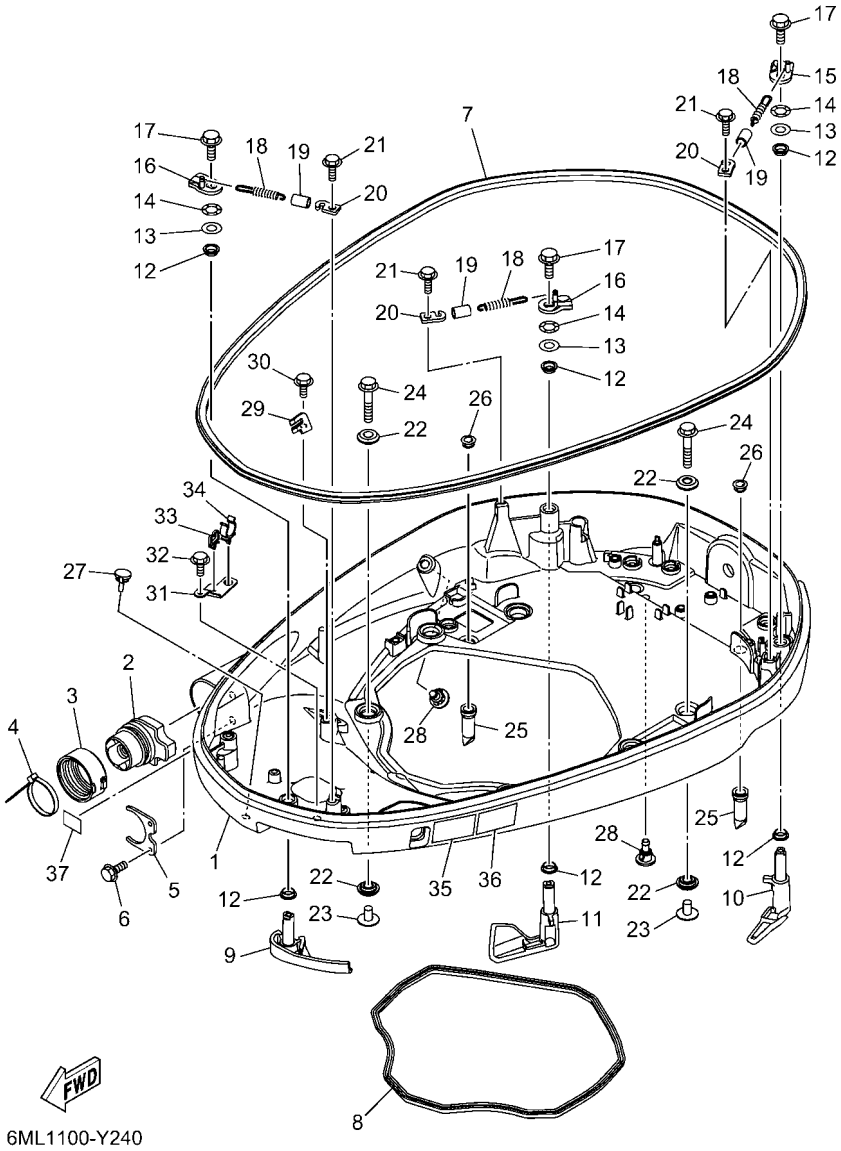

FIG. 24 BOTTOM COWLING 1 — CUBIERTA INFERIOR 1

REF. NO.	PART NO. CODIGO Nº	DESCRIPTION DESCRIPCION	6ML1	6MM1				REMARKS OBSERVACIONES
24	90119–08187	BOLT, WITH WASHER TORNILLO CON ARANDELA	6	6				
25	6DA–42717–01	RUBBER, SEAL 2 GOMA	4	4				
26	6DA–42384–00	SEAL, CAP SELLO DE TAPA	4	4				
27	6H4–42748–01	GROMMET TAPON	1	1				
28	6P2–44391–00	NIPPLE, HOSE NIPLE MANGUERA	2	2				
29	6ML–42766–00	BRACKET 2 SOPORTE 2	1	1				
30	95D95–06012	BOLT, FLANGE DEEP RECESS CERROJO, REBORDE HUECO PROFUND	1	1				
31	6ML–42756–00	STAY, CLAMP SOPORTE DE GRAMPA	1	1				
32	95D95–06012	BOLT, FLANGE DEEP RECESS CERROJO, REBORDE HUECO PROFUND	1	1				
33	90464–08004	CLAMP BRIDA	1	1				
34	90464–19M45	CLAMP BRIDA	1	1				
35	6EE–42794–40	LABEL, WARNING (GENERAL) ETIQUETA DE PRECAUCION	1	1				
36	6EE–42794–50	LABEL, WARNING (GENERAL) ETIQUETA DE PRECAUCION	1	1				FOR CAR FOR CAR
37	6AH–81996–00	MARK MARCA	1	1				FOR CAR FOR CAR

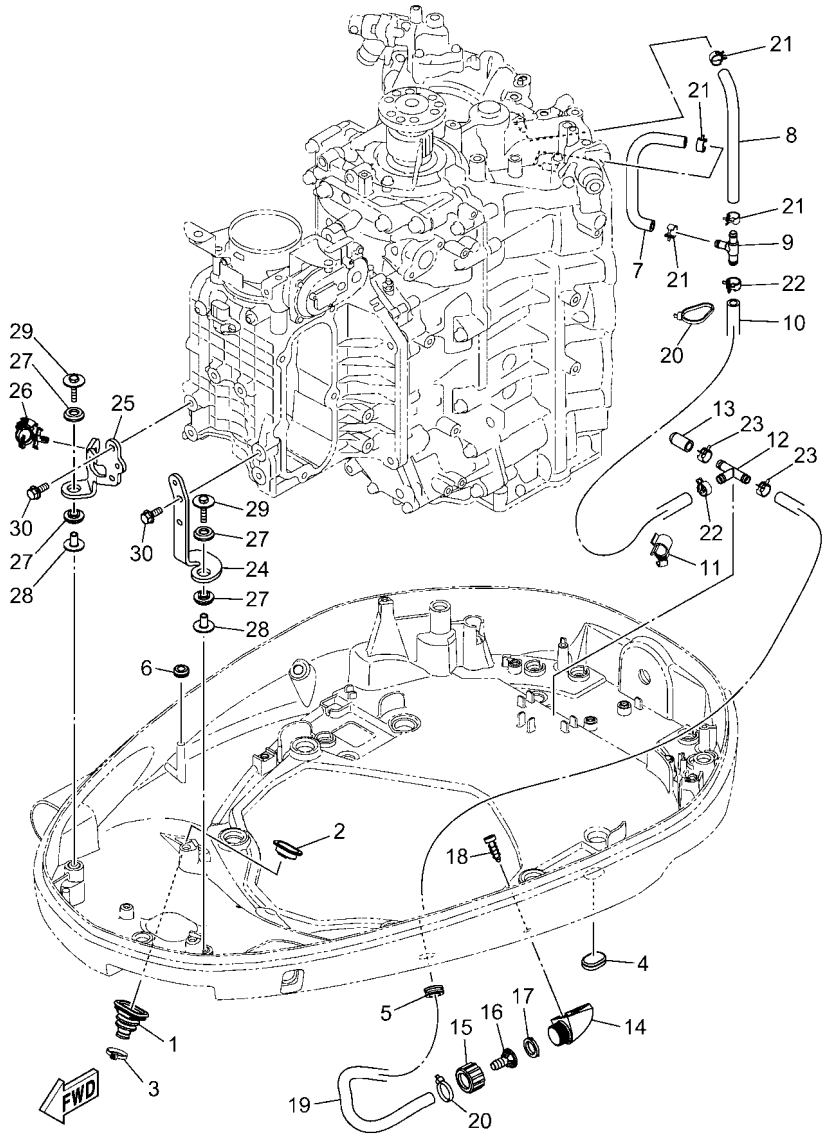

6ML1100-Y250

FIG. 25 BOTTOM COWLING 2 — CUBIERTA INFERIOR 2

REF. NO.	PART NO. CODIGO Nº	DESCRIPTION DESCRIPCION	6ML1	6MM1				REMARKS OBSERVACIONES
1	6BG–42724–01	GROMMET TAPON	1	1				
2	6BG–42384–00	SEAL, CAP SELLO DE TAPA	1	1				
3	90465–11M10	CLAMP BRIDA	1	1				
4	64G–42727–01	GROMMET TAPON	1	1				
5	90480–19031	GROMMET TAPON	1	1				
6	90480–13163	GROMMET TAPON	1	1				
7	6CB–24315–00	PIPE 5 TUBO DE DESAGUE	1	1				
8	90445–14021	HOSE (L185) TUBO (L185)	1	1				
9	6AW–42169–00	JOINT CONECTOR	1	1				
10	6KA–13582–00	PIPE TUBO	1	1				
11	90464–16017	CLAMP BRIDA	1	1				
12	90413–10001	WAY 3 UNION	1	1				
13	6KA–13587–00	CAP, JOINT TAPA DE TOBERA	1	1				
14	6AW–12572–00	ADAPTER ADAPTADOR	1	1				
15	6R3–12581–00	JOINT, HOSE 1 CONEXION	1	1				
16	6AW–12582–00	JOINT, HOSE 2 CONEXION	1	1				
17	6R3–12583–00	GASKET, HOSE JOINT EMPAQUETADURA JUNTA DE MANGUE	1	1				
18	97780–60520	SCREW, TAPPING TORNILLO DE CABEZA DE CONO ACH	2	2				
19	6KA–42541–00	PIPE 1 TUBO 1	1	1				
20	90465–11M10	CLAMP BRIDA	2	2				
21	90467–130A5	CLIP PRESILLA	4	4				
22	90467–140A8	CLIP PRESILLA	2	2				
23	90467–140A9	CLIP PRESILLA	2	2				
24	6ML–42643–00	PLATE, CLAMP PLACA GRAMPA	1	1				
25	6ML–42644–00	PLATE, CLAMP 2 PLACA GRAMPA 2	1	1				
26	90464–18011	CLAMP BRIDA	1	1				
27	90480–14029	GROMMET TAPON	4	4				

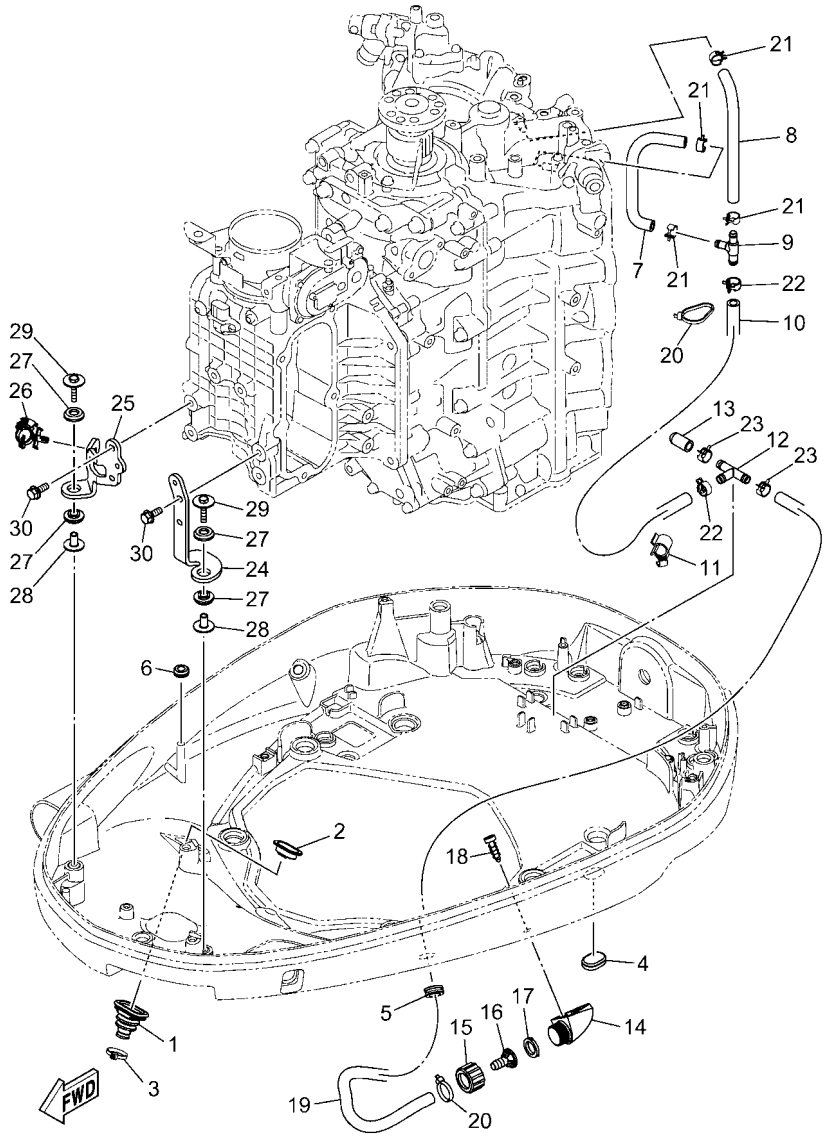

6ML1100-Y250

FIG. 25 BOTTOM COWLING 2 — CUBIERTA INFERIOR 2

REF. NO.	PART NO. CODIGO Nº	DESCRIPTION DESCRIPCION	6ML1	6MM1				REMARKS OBSERVACIONES
28	90387–06M03	COLLAR ESPACIADOR	2	2				
29	90119–06291	BOLT, WITH WASHER TORNILLO CON ARANDELA	2	2				
30	90105–06039	BOLT, FLANGE TORNILLO	4	4				

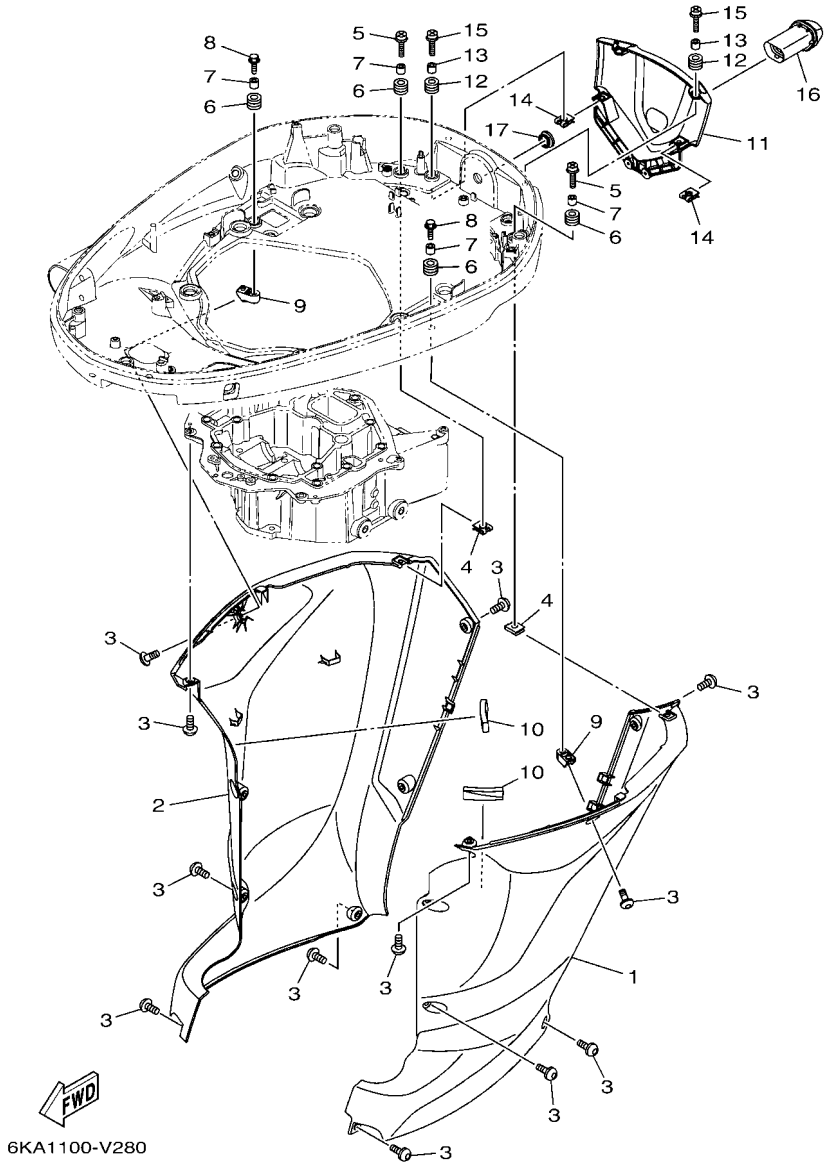

FIG. 26 BOTTOM COWLING 3 — CUBIERTA INFERIOR 3

REF. NO.	PART NO. CODIGO Nº	DESCRIPTION DESCRIPCION	6ML1	6MM1				REMARKS OBSERVACIONES
1	6KA–42740–00–8D	APRON COMPLETE 1 MANDIL COMPLETO 1	1	1				GRAY GRAY
	6KA–42740–00–CE	APRON COMPLETE 1 MANDIL COMPLETO 1	1	1				WHITE WHITE
2	6KA–42770–00–8D	APRON COMPLETE 2 MANDIL COMPLETO 2	1	1				GRAY GRAY
	6KA–42770–00–CE	APRON COMPLETE 2 MANDIL COMPLETO 2	1	1				WHITE WHITE
3	90111–06144	BOLT, HEXAGON SOCKET BUTTON TORNILLO	16	16				
4	90183–061A8	NUT, SPRING TUERCA DE RESORTE	2	2				
5	90159–06053	SCREW, WITH WASHER TORNILLO CON VALONA	2	2				
6	90480–13M24	GROMMET TAPON	4	4				
7	90387–06M43	COLLAR ESPACIADOR	4	4				
8	90109–06M80	BOLT PERNO	2	2				
9	6CE–42774–A0	STAY, APRON 1 BUJEDEL PIVOTE DE LA FLECHA	2	2				
10	5GJ–21717–00	DAMPER AMORTIGUADOR	2	2				
11	6KA–42723–00–8D	COVER, BOTTOM CUBIERTA INFERIOR	1	1				GRAY GRAY
	6KA–42723–00–CE	COVER, BOTTOM CUBIERTA INFERIOR	1	1				WHITE WHITE
12	90480–13M24	GROMMET TAPON	4	4				
13	90387–06M43	COLLAR ESPACIADOR	4	4				
14	90183–061A8	NUT, SPRING TUERCA DE RESORTE	2	2				
15	90159–06053	SCREW, WITH WASHER TORNILLO CON VALONA	4	4				
16	6KA–42769–00	SEAL, RUBBER SELLO DE GOMA	1	1				
17	676–42726–00	GROMMET TAPON	1	1				

FIG. 27 BOTTOM COWLING 4 — CUBIERTA INFERIOR 4

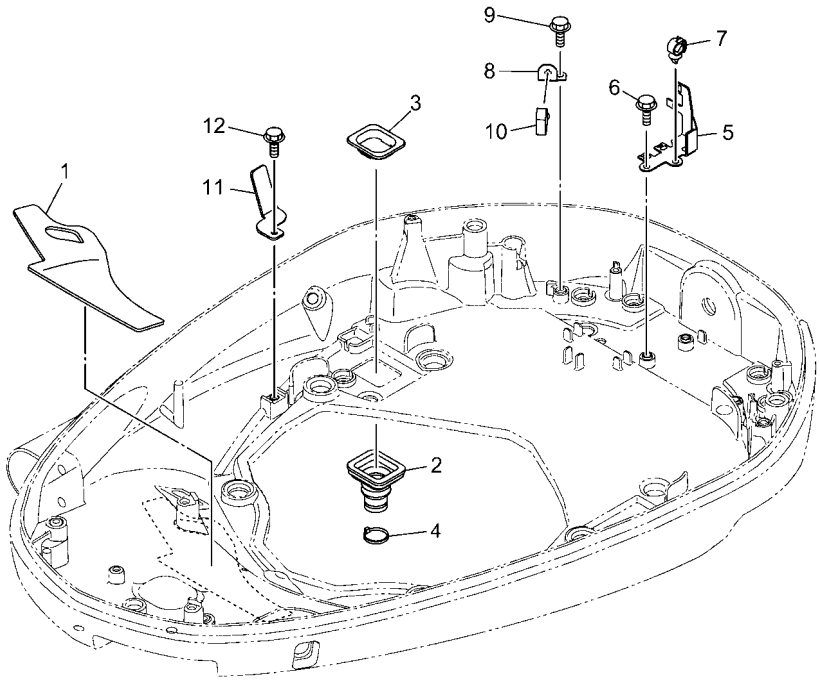

6ML1100-Y270

REF. NO.	PART NO. CODIGO Nº	DESCRIPTION DESCRIPCION	6ML1	6MM1				REMARKS OBSERVACIONES
1	6ML–42619–00	DAMPER, FORM HULE DE FORMA	1	1				
2	6GR–42724–01	GROMMET TAPON	1	1				
3	6GR–42384–00	SEAL, CAP SELLO DE TAPA	1	1				
4	90465–11M59	CLAMP BRIDA	1	1				
5	6KA–8257V–01	PLATE, CONNECTOR PLACA DE CONECTOR	1	1				
6	95D95–06012	BOLT, FLANGE DEEP RECESS CERROJO, REBORDE HUECO PROFUND	2	2				
7	90464–13249	CLAMP BRIDA	1	1				
8	63P–42756–00	STAY, CLAMP SOPORTE DE GRAMPA	1	1				
9	95D95–06012	BOLT, FLANGE DEEP RECESS CERROJO, REBORDE HUECO PROFUND	1	1				
10	90464–20181	CLAMP BRIDA	1	1				
11	6KA–42811–00	STAY SOPORTE GRAMPA	1	1				
12	95D95–06012	BOLT, FLANGE DEEP RECESS CERROJO, REBORDE HUECO PROFUND	1	1				

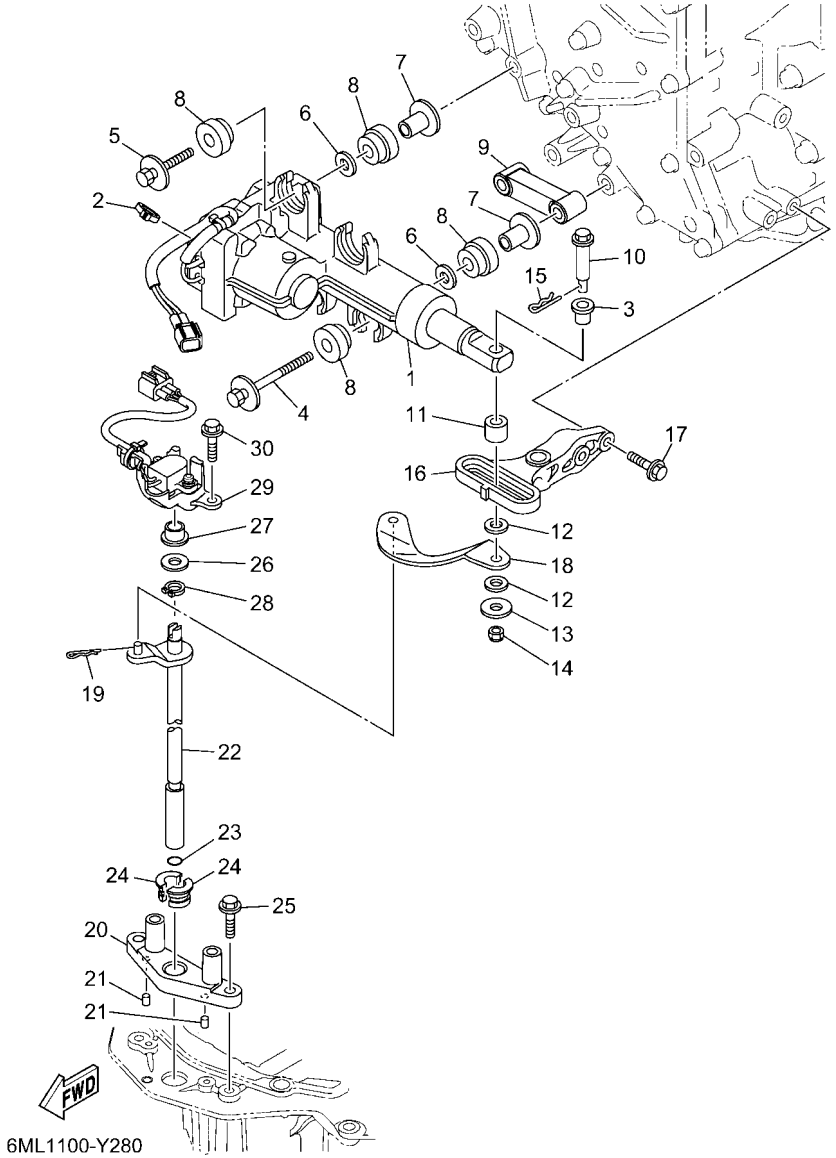

FIG. 28 CONTROL

CONTROL

REF. NO.	PART NO. CODIGO Nº	DESCRIPTION DESCRIPCION	6ML1	6MM1				REMARKS OBSERVACIONES
1	6ML–4820A–00	ACTUATOR UNIT UNIDAD DE ACTUADOR	1	1				
2	90465–11M10	CLAMP BRIDA	1	1				
3	90386–08008	BUSH BUJE	1	1				
4	90119–08168	BOLT, WITH WASHER TORNILLO CON ARANDELA	2	2				
5	90119–08175	BOLT, WITH WASHER TORNILLO CON ARANDELA	2	2				
6	90201–12064	WASHER, PLATE ARANDELA PLANA	4	4				
7	90387–08104	COLLAR ESPACIADOR	4	4				
8	6CE–85564–00	GROMMET ANILLO PROTECTOR	8	8				
9	6ML–44142–00	JOINT CONECTOR	1	1				
10	6CE–42195–10	PIN, JOINT 1 PASADOR DE CONECTOR	1	1				
11	6CE–44122–20	BUSHING, SHIFT ROD LEVER BUJE PALANCA VARILLA DE CAMBIO	1	1				
12	90202–08M41	WASHER, PLATE ARANDELA DE PLANA	2	2				
13	90201–06068	WASHER, PLATE ARANDELA PLANA	1	1				
14	90185–06M07	NUT, SELF-LOCKING TUERCA AUTOBLOCANTE	1	1				
15	90468–18008	CLIP PRESILLA	1	1				
16	6CE–44117–10	BRACKET SOPORTE	1	1				
17	97E75–06525	BOLT, HEXAGON W/W DEEP RECESS TORNILLO HEXAGONAL CON RONDONA	2	2				
18	6CE–44121–10	LEVER, SHIFT ROD PALANCA VARILLA CAMBIOS	1	1				
19	90468–18008	CLIP PRESILLA	1	1				
20	6CE–44118–A0	BRACKET SOPORTE	1	1				
21	93604–07M13	PIN, DOWEL PASADOR DE CLAVIJA	2	2				
22	6KA–44120–00	HANDLE GEAR SHIFT ASSY MANIJA DE CAMBIO COMPL	1	1				
23	93210–09165	O-RING ANILLO O	1	1				
24	90386–11001	BUSH BUJE	2	2				
25	95D75–06025	BOLT, FLANGE DEEP RECESS CERROJO, REBORDE HUECO PROFUND	2	2				
26	90201–11008	WASHER, PLATE ARANDELA PLANA	1	1				
27	90386–10001	BUSH BUJE	1	1				

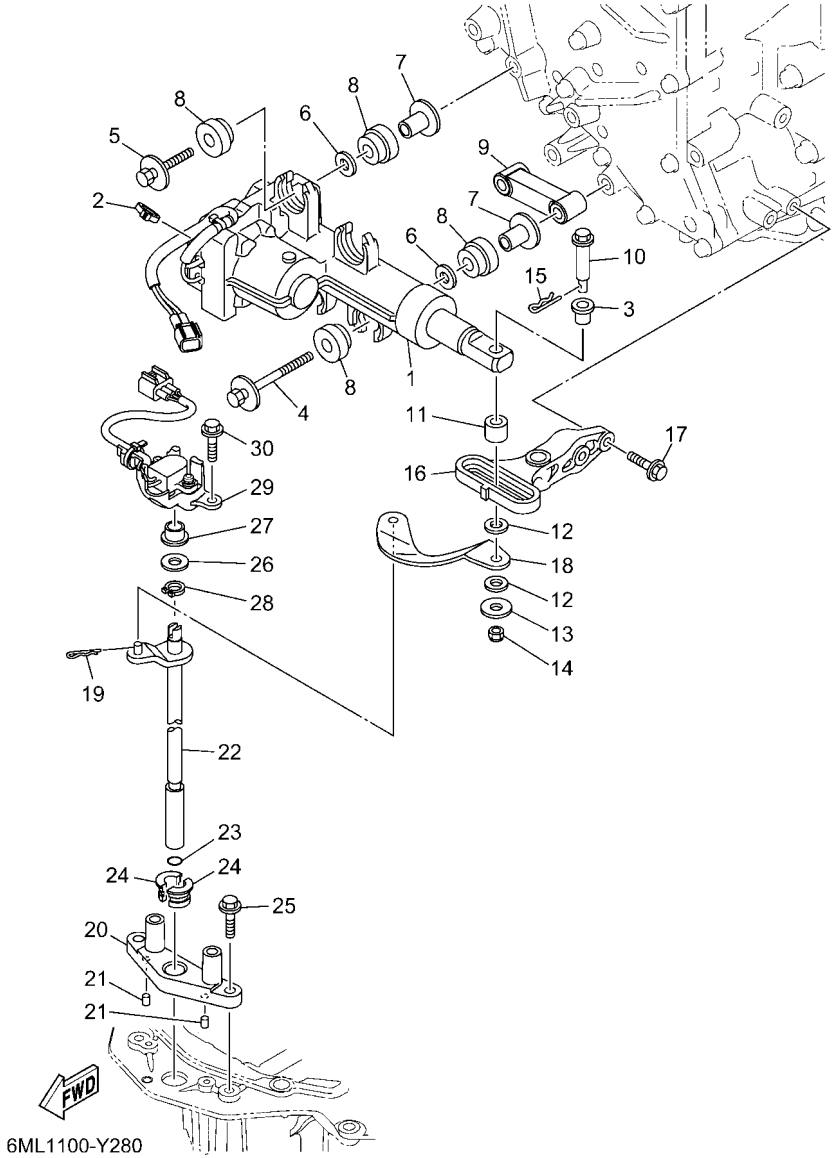

FIG. 28 CONTROL

REF. NO.	PART NO. CODIGO Nº	DESCRIPTION DESCRIPCION	6ML1	6MM1				REMARKS OBSERVACIONES
28	93410–10082	CIRCLIP SEGURO	1	1				
29	6CE–68303–00	SENSOR ASSY SENSOR COMP.	1	1				
30	95D75–06025	BOLT, FLANGE DEEP RECESS CERROJO, REBORDE HUECO PROFUND	2	2				

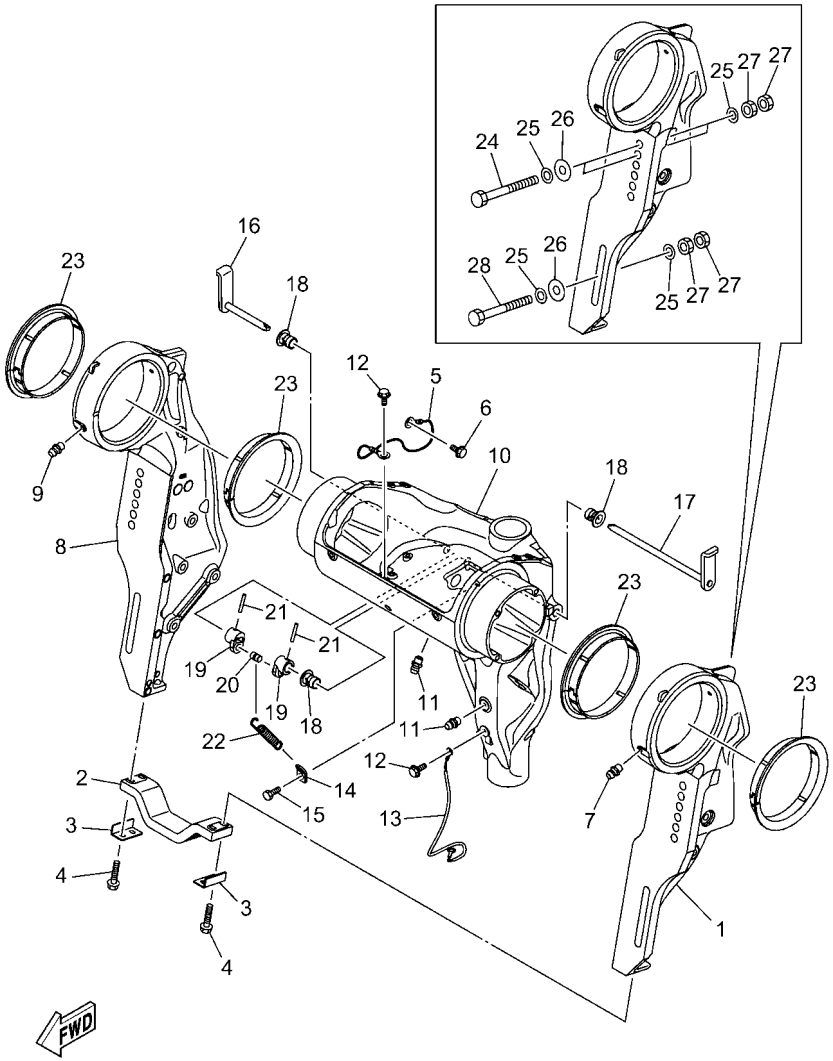

6ML1100-Y290

FIG. 29 BRACKET 1 — SOPORTE 1

REF. NO.	PART NO. CODIGO Nº	DESCRIPTION DESCRIPCION	6ML1	6MM1				REMARKS OBSERVACIONES
1	6ML–43111–00–8D	BRACKET, CLAMP 1 SOPORTE DE LA ABRAZADERA 1	1	1				GRAY GRAY
	6ML–43111–00–CE	BRACKET, CLAMP 1 SOPORTE DE LA ABRAZADERA 1	1	1				WHITE WHITE
2	6G5–45251–02	ANODE CATODE	1	1				
3	6G5–44526–00	PLATE PLACA 1	2	2				
4	97E95–06525	BOLT, HEXAGON W/W DEEP RECESS TORNILLO HEXAGONAL CON RONDONA	4	4				
5	6U0–82127–00	WIRE, LEAD 2 CABLE CONDUCTOR 2	1	1				
6	97E95–06510	BOLT, HEXAGON W/W DEEP RECESS TORNILLO HEXAGONAL CON RONDONA	1	1				
7	93700–06002	NIPPLE, GREASE BOQUILLA DE ENGRASAR	1	1				
8	6ML–43112–00–8D	BRACKET, CLAMP 2 SOPORTE DE LA ABRAZADERA 2	1	1				GRAY GRAY
	6ML–43112–00–CE	BRACKET, CLAMP 2 SOPORTE DE LA ABRAZADERA 2	1	1				WHITE WHITE
9	93700–06002	NIPPLE, GREASE BOQUILLA DE ENGRASAR	1	1				
10	6KA–43311–00–8D	BRACKET, SWIVEL 1 SOPORTE GIRATORIO 1	1	1				GRAY GRAY
	6KA–43311–00–CE	BRACKET, SWIVEL 1 SOPORTE GIRATORIO 1	1	1				WHITE WHITE
11	93700–06002	NIPPLE, GREASE BOQUILLA DE ENGRASAR	3	3				
12	97E95–06510	BOLT, HEXAGON W/W DEEP RECESS TORNILLO HEXAGONAL CON RONDONA	2	2				
13	6KA–82147–00	WIRE, LEAD 5 CABLE CONDUCTOR 5	1	1				
14	6G5–43144–00	HOOK, SPRING GANCHO	1	1				
15	97D95–06010	BOLT, HEXAGON DEEP RECESS TORNILLO HEXAGONAL	1	1				
16	6KA–43181–00	LEVER, TILT STOP 1 PALANCA TOPE INCLINACION 1	1	1				
17	6KA–43185–00	LEVER, TILT STOP 2 PALANCA TOPE INCLINACION 2	1	1				
18	90386–10M16	BUSH BUJE	3	3				
19	6G5–43148–00	COLLAR, DISTANCE COLLAR	2	2				
20	90249–06M19	PIN PASADOR	1	1				
21	91690–30020	PIN, SPRING PASADOR DE RESORTE	2	2				
22	90506–16010	SPRING, TENSION RESORTE DE TENSION	1	1				
23	6GR–43333–00	BUSH. , SWIVEL BRACKET BUSH. , SOPORTE GIRATORIO	4	4				
24	90101–12067	BOLT (150MM) TORNILLO (150MM)	4	4				FOR NME FOR NME

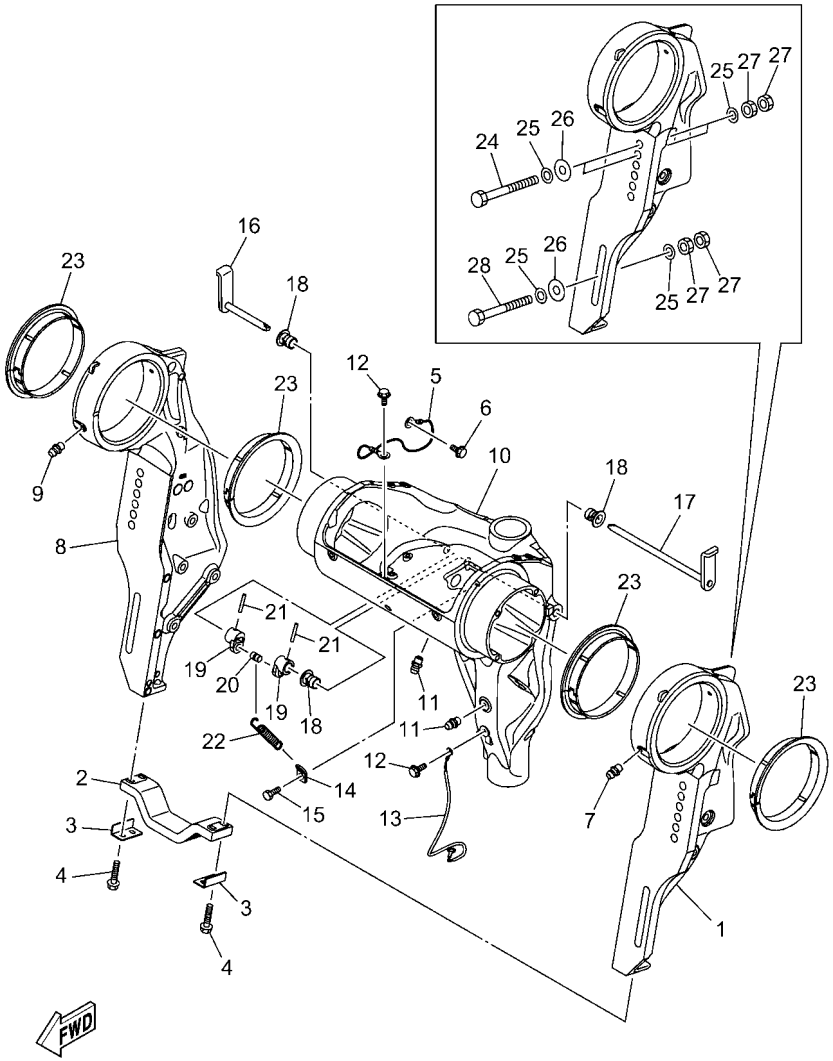

6ML1100-Y290

FIG. 29 BRACKET 1 SOPORTE 1

REF. NO.	PART NO. CODIGO Nº	DESCRIPTION DESCRIPCION	6ML1	6MM1				REMARKS OBSERVACIONES
24	90101–12067	BOLT (150MM) TORNILLO (150MM)	6	6				FOR CAR FOR CAR
25	90201–13M01	WASHER, PLATE ARANDELA PLANA	12	12				
26	90201–12426	WASHER, PLATE ARANDELA PLANA	6	6				
27	95380–12600	NUT TUERCA	12	12				
28	90101–12076	BOLT (130MM) TORNILLO (130MM)	2	2				
	90101–12071	BOLT (85MM) TORNILLO (85MM)	2	2				AP AP
	90101–12072	BOLT (110MM) TORNILLO (110MM)	2	2				AP AP
	90101–12076	BOLT (130MM) TORNILLO (130MM)	2	2				AP AP
	90101–12067	BOLT (150MM) TORNILLO (150MM)	2	2				AP AP
	90101–12077	BOLT (160MM) TORNILLO (160MM)	2	2				AP AP
	90101–12068	BOLT (170MM) TORNILLO (170MM)	2	2				AP AP
	90101–12073	BOLT (180MM) TORNILLO (180MM)	2	2				AP AP
	90101–12074	BOLT (200MM) TORNILLO (200MM)	2	2				AP AP

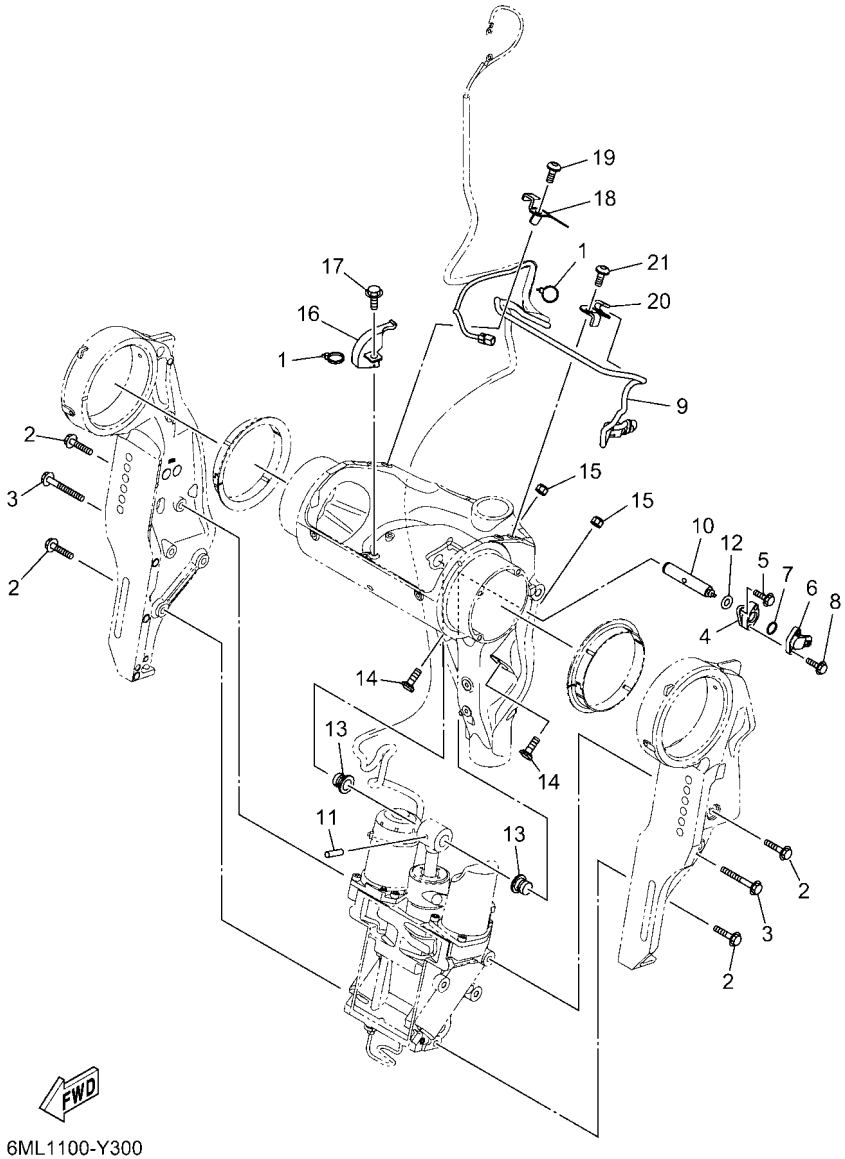

6ML1100-Y300

FIG. 30 BRACKET 2 — SOPORTE 2

REF. NO.	PART NO. CODIGO Nº	DESCRIPTION DESCRIPCION	6ML1	6MM1				REMARKS OBSERVACIONES
1	90465–11M10	CLAMP BRIDA	2	2				
2	90119–10024	BOLT, WITH WASHER TORNILLO CON ARANDELA	6	6				
3	90119–10064	BOLT, WITH WASHER TORNILLO CON ARANDELA	2	2				
4	6KA–4382A–00	ADAPTOR 1 ADAPTADOR 1	1	1				
5	97595–05516	BOLT, WITH WASHER PERNO CON ARANDELA	2	2				
6	6GR–85887–00	SENSOR ANGLE SENSOR DE PAR	1	1				
7	93210–17MF9	O-RING ANILLO O	1	1				
8	97595–05516	BOLT, WITH WASHER PERNO CON ARANDELA	2	2				
9	6KA–82553–00	EXTENSION, WIRE LEAD CABLE	1	1				
10	6KA–43126–00	PIN, UPPER SHOCK MOUNT PASADOR DE AMORTIGUADOR SUPERI	1	1				
11	91690–60022	PIN, SPRING PASADOR DE RESORTE	1	1				
12	93210–06ME6	O-RING ANILLO O	1	1				
13	90386–18M14	BUSH BUJE	2	2				
14	6AW–43376–00	BOLT, THRUST RECEIVER TORNILLO RECEPTOR	2	2				
15	95780–10300	NUT, FLANGE TUERCA	2	2				
16	6KA–47651–00	PROTECTOR PROTECTOR	1	1				
17	95D95–06012	BOLT, FLANGE DEEP RECESS CERROJO, REBORDE HUECO PROFUND	1	1				
18	6KA–4381E–00	BRACKET, 1 SOPORTE, 1	1	1				
19	90111–06144	BOLT, HEXAGON SOCKET BUTTON TORNILLO	1	1				
20	6KA–4381F–00	BRACKET, 2 SOPORTE, 2	1	1				
21	90111–06144	BOLT, HEXAGON SOCKET BUTTON TORNILLO	1	1				

FIG. 31 BRACKET 3 SOPORTE 3

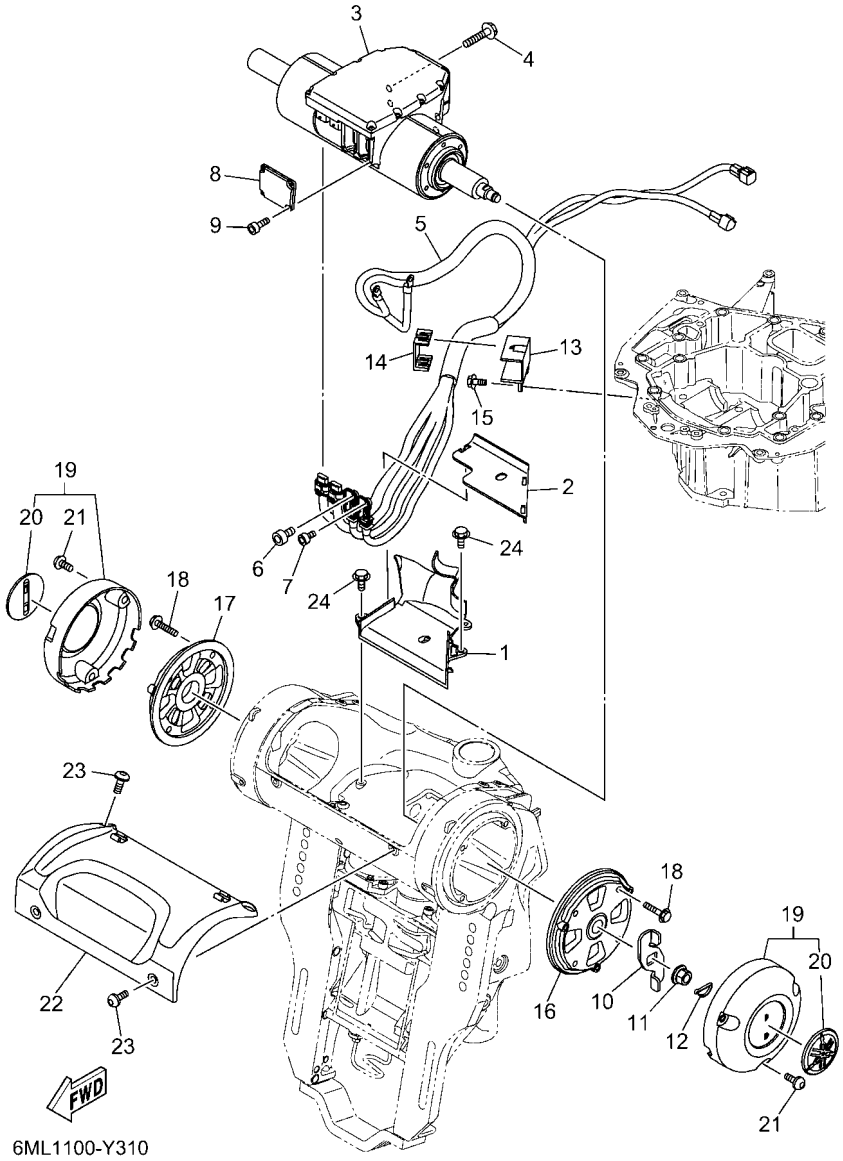

REF. NO.	PART NO. CODIGO Nº	DESCRIPTION DESCRIPCION	6ML1	6MM1				REMARKS OBSERVACIONES
1	6KA–87228–00	COVER HARNESS CUBIERTA, ARNES	1	1				
2	6KA–8722G–00	COVER HARNESS 2 CUBIERTA, ARNES 2	1	1				
3	6KA–42401–20	POWER STEERING CYLINDER ASSY MANEJO DE ENERGIA CILINDRO CPL	1	1				
4	97580–08535	BOLT, WITH WASHER PERNO CON ARANDELA	4	4				
5	6KA–438A0–01	STEERING, WIRE HARNESS ASSY DIRECCION, ATALAJE DEL ALAMBRE	1	1				
6	6GR–44331–00	BOLT, 1 PERNO, 1	1	1				
7	6GR–44332–00	BOLT, 2 PERNO, 2	1	1				
8	6GR–42134–00	COVER CUBIERTA	1	1				
9	91380–04010	BOLT PERNO	4	4				
10	6GR–43378–10	WASHER ARANDELA	1	1				
11	90179–14009	NUT TUERCA	1	1				
12	91490–20025	PIN. COTTER CHAVETA	1	1				
13	6KA–43121–00	PROTECTOR PROTECTOR	1	1				
14	6KA–47445–00	PROTECTOR PROTECTOR	1	1				
15	95D95–06012	BOLT, FLANGE DEEP RECESS CERROJO, REBORDE HUECO PROFUND	2	2				
16	6KA–43341–00	COVER, SWIVEL SODE 1 CUBIERTA, SODE GIRATORIO 1	1	1				
17	6KA–43342–00	COVER, SWIVEL SODE 2 CUBIERTA, SODE GIRATORIO 2	1	1				
18	90119–08176	BOLT, WITH WASHER TORNILLO CON ARANDELA	8	8				
19	6GR–W436G–00–8D	SBW SIDE COVER ASSY SBW CUBIERTA LATERAL COMPLETA	2	2				GRAY GRAY
	6GR–W436G–00–CE	SBW SIDE COVER ASSY SBW CUBIERTA LATERAL COMPLETA	2	2				WHITE WHITE
20	6DA–42697–00	.TUNING FORK MARK .MARCA, YAMAHA	1	1				
21	90111–06144	BOLT, HEXAGON SOCKET BUTTON TORNILLO	6	6				
22	6KA–43318–00–8D	COVER CUBIERTA	1	1				GRAY GRAY
	6KA–43318–00–CE	COVER CUBIERTA	1	1				WHITE WHITE
23	90111–06144	BOLT, HEXAGON SOCKET BUTTON TORNILLO	4	4				
24	95D95–06012	BOLT, FLANGE DEEP RECESS CERROJO, REBORDE HUECO PROFUND	2	2				

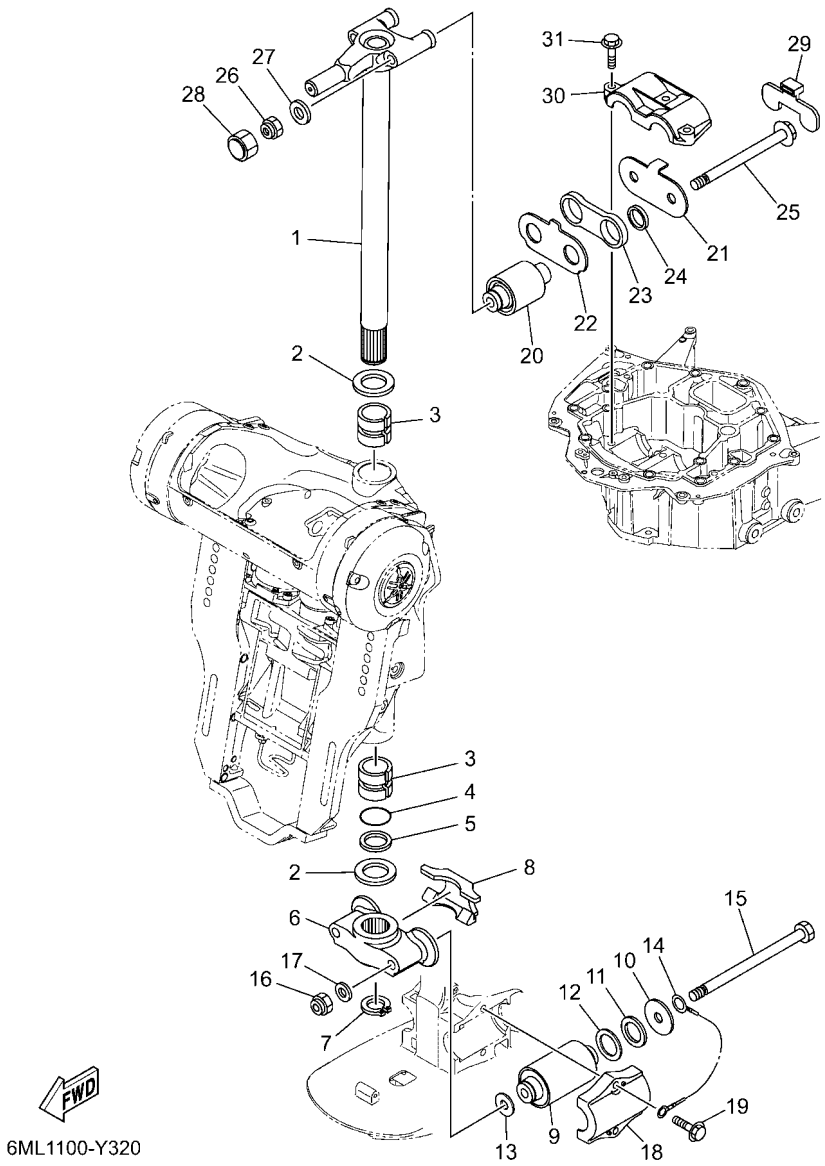

FIG. 32 BRACKET 4 — SOPORTE 4

REF. NO.	PART NO. CODIGO Nº	DESCRIPTION DESCRIPCION	6ML1	6MM1				REMARKS OBSERVACIONES
1	6KA–42510–01–8D	STEERING BRACKET ASSY SOPORTE DIRECCION COMPL.	1	1				GRAY GRAY
	6KA–42510–01–CE	STEERING BRACKET ASSY SOPORTE DIRECCION COMPL.	1	1				WHITE WHITE
2	90201–40M00	WASHER, PLATE ARANDELA PLANA	2	2				
3	90386–39M89	BUSH BUJE	2	2				
4	93210–35321	O-RING ANILLO O	1	1				
5	90202–40M47	WASHER, PLATE ARANDELA DE PLANA	1	1				
6	6CE–44551–00–CA	HOUSING, LOWER MOUNT RUBBER 1 CAJA AMORTIGUADOR INFERIOR HU	1	1				
7	93410–37M04	CIRCLIP SEGURO	1	1				
8	6CE–44574–00	STOPPER, LOWER MOUNT RUBBER TOPE	1	1				
9	6KA–44555–00	MOUNT DAMPER, LOWER SIDE AMORTIGUADOR DE HULE LADO INFE	2	2				
10	90201–16032	WASHER, PLATE ARANDELA PLANA	2	2				
11	90202–32M19	WASHER, PLATE ARANDELA DE PLANA	2	2				
12	90201–35008	WASHER, PLATE ARANDELA PLANA	2	2				
13	90201–15M58	WASHER, PLATE ARANDELA PLANA	2	2				
14	6AW–82149–00	WIRE, LEAD 3 CABLE CONDUCTOR 3	1	1				
15	90101–14004	BOLT TORNILLO	2	2				
16	90185–14M00	NUT, SELF-LOCKING TUERCA AUTOBLOCANTE	2	2				
17	92995–14600	WASHER ARANDELA	2	2				
18	6AW–44552–00–CA	HOUSING, LOWER MOUNT RUBBER 2 CAJA AMORTIGUADOR INFERIOR HU	2	2				
19	90119–10024	BOLT, WITH WASHER TORNILLO CON ARANDELA	4	4				
20	6CE–44514–00	MOUNT DAMPER, UPPER SIDE AMORTIGUADOR LADO SUPERIOR	2	2				
21	6CE–44526–00	PLATE PLACA 1	1	1				
22	6CE–44536–00	PLATE 2 PLACA 2	1	1				
23	6CE–44532–01	STOPPER, UPPER MOUNT RETEN	1	1				
24	90387–28013	COLLAR ESPACIADOR	2	2				
25	90105–14005	BOLT, FLANGE TORNILLO	2	2				
26	90185–14M00	NUT, SELF-LOCKING TUERCA AUTOBLOCANTE	2	2				

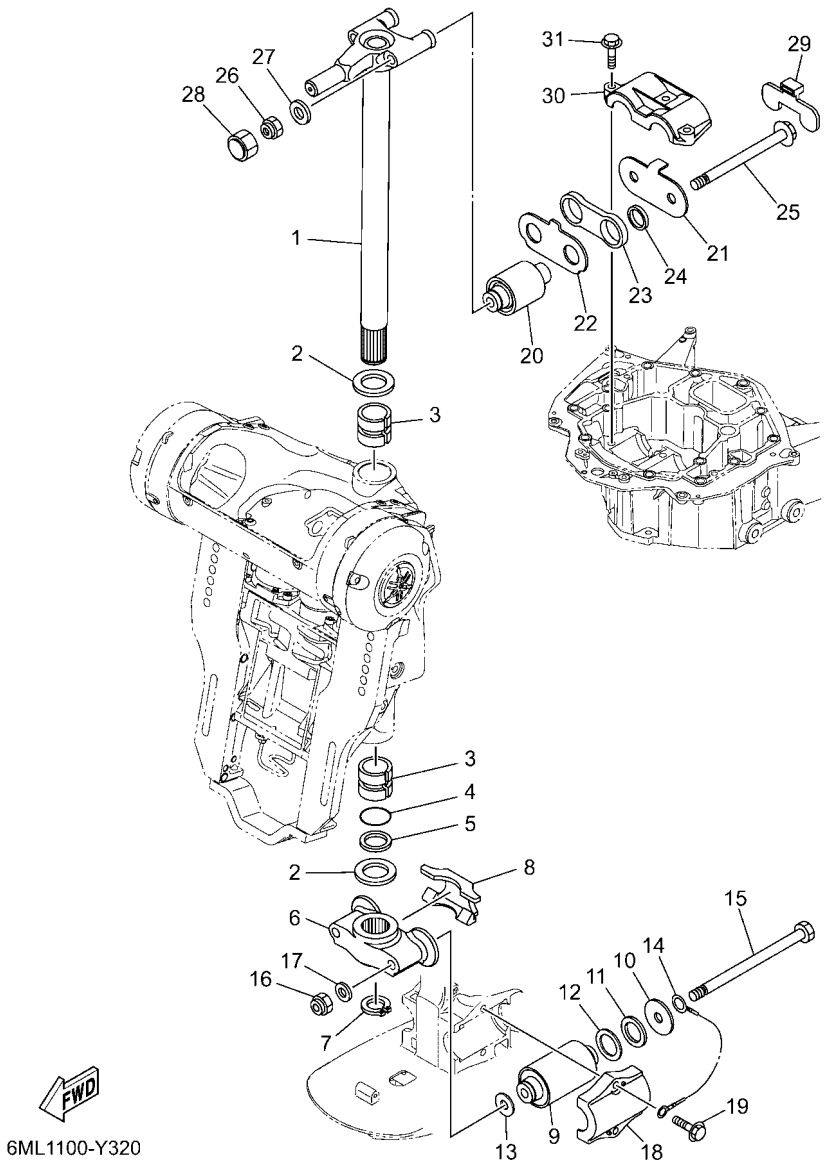

FIG. 32 BRACKET 4 SOPORTE 4

REF. NO.	PART NO. CODIGO Nº	DESCRIPTION DESCRIPCION	6ML1	6MM1				REMARKS OBSERVACIONES
27	92995–14600	WASHER ARANDELA	2	2				
28	6CE–44194–01	CAP TAPA	2	2				
29	6CE–44533–00	DAMPER, UPPER MOUNT RUBBER AMORTIGUADOR SUPERIOR	1	1				
30	6CE–44511–00	COVER, UPPER MOUNT CUBIERTA AMORTIGUADOR SUPERIOR	1	1				
31	90119–10024	BOLT, WITH WASHER TORNILLO CON ARANDELA	3	3				

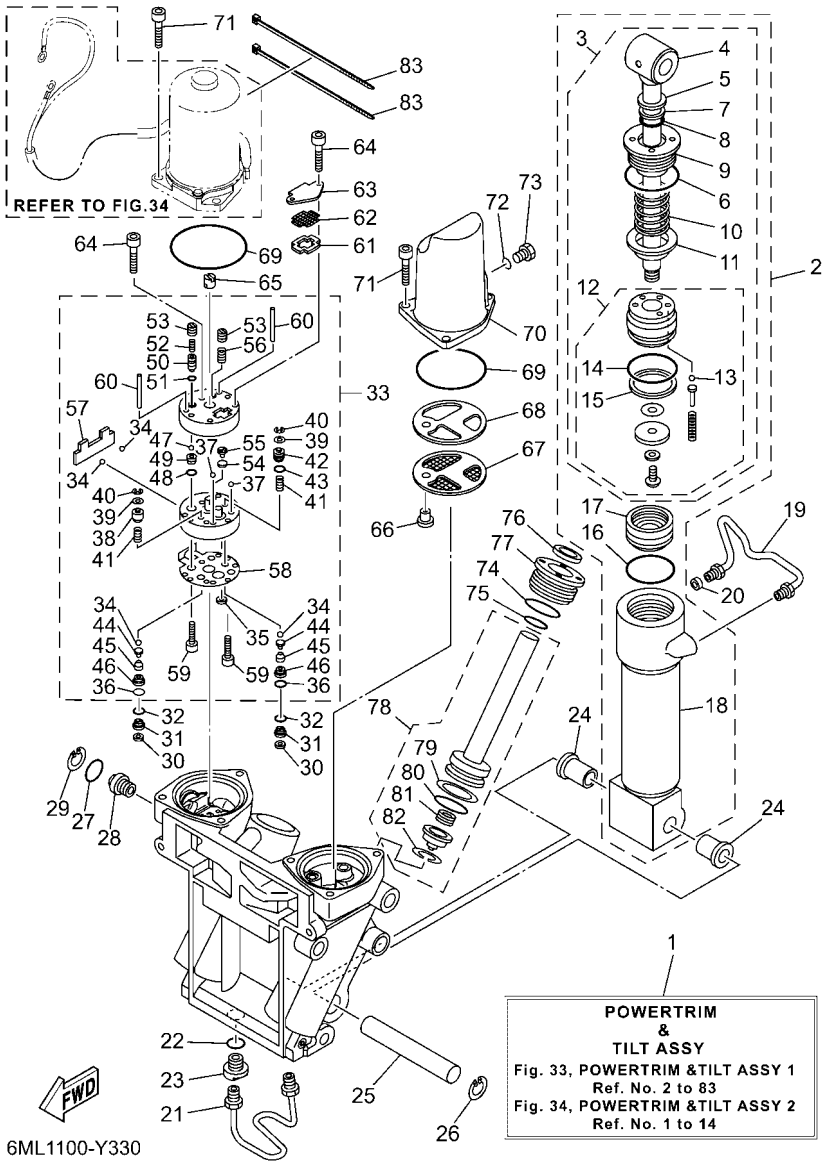

FIG. 33 POWER TRIM & TILT ASSY 1 — COMPONER Y PODER VARILLA 1

REF. NO.	PART NO. CODIGO Nº	DESCRIPTION DESCRIPCION	6ML1	6MM1				REMARKS OBSERVACIONES
1	6ML–W4380–00–8D	POWER TRIM & TILT ASSY ELEVADOR HIDRAULICO COMPL	1	1				GRAY GRAY
	6ML–W4380–00–CE	POWER TRIM & TILT ASSY ELEVADOR HIDRAULICO COMPL	1	1				WHITE WHITE
2	6KA–43840–00	POWER TILT ASSY CONJUNTO COMPONER	1	1				
3	6KA–43810–00	.TILT PISTON SUB ASSY .ELEVADOR SUB-PISTON COMPL.	1	1				
4	6KA–43801–00	..ROD ..VALILLA COMPL INCLINACION	1	1				
5	93106–19001	..OIL SEAL ..SELLO ACEITE	1	1				
6	63P–43861–20	..O-RING ..ANILLO EN O 1	1	1				
7	6H1–43872–00	..RING, BACK UP ..ANILLO	1	1				
8	61A–4389H–01	..O-RING ..ANILLO EN O	1	1				
9	61A–43811–00	..SCREW, CYLINDER END ..TORNILLO CILINDRO EXTREMO	1	1				
10	69J–4384H–00	..SPRING ..RESORTE	1	1				
11	69J–4382E–00	..ADAPTOR 2 ..ADAPTADOR 2	1	1				
12	6CE–4380P–00	..PISTON SUB ASSY ..SUB-PISTON COMPL	1	1				
13	93505–32038	...BALL ...BOLA	5	5				
14	61A–43861–00	...O-RING ...ANILLO EN O 1	1	1				
15	61A–43871–00	...RING, BACK UP ...ANILLO	1	1				
16	61A–43861–00	.O-RING .ANILLO EN O 1	1	1				
17	6H1–43814–11	.PISTON, FREE .PISTON LIBRE	1	1				
18	61A–43813–02	.CYLINDER, TILT .CILINDRO INCLINACION	1	1				
19	69J–43835–10	PIPE TUBO 3	1	1				
20	69J–4388J–00	PLUG 2 TAPON 2	1	1				
21	69J–43833–02	PIPE TUBO 1	1	1				
22	93210–17239	O-RING ANILLO O	1	1				
23	69J–4388E–01	BOLT ,SCREW PERNO	1	1				
24	90386–18M14	BUSH BUJE	2	2				
25	6ML–43818–00	PIN, LOWER SHOCK MOUNT PASADOR AMORTIGUADOR INFERIOR	1	1				
26	61A–43876–01	RING, SNAP ANILLO	1	1				

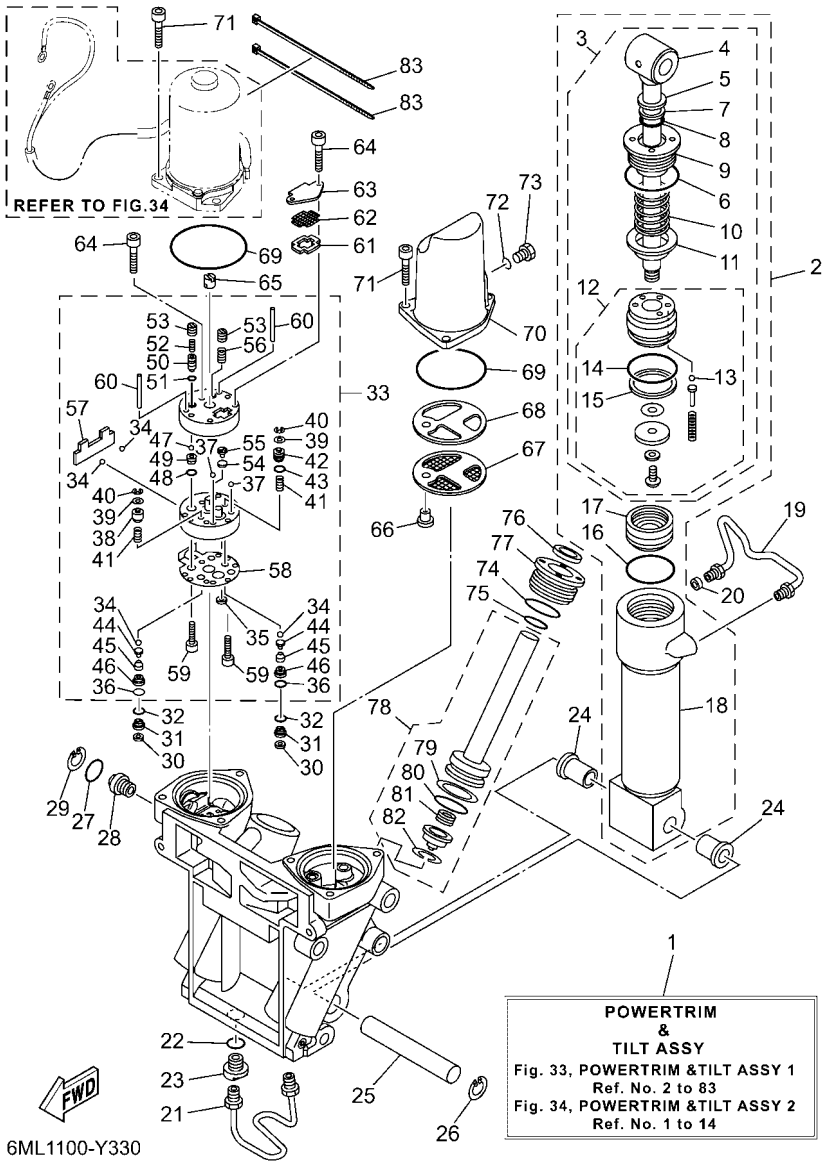

FIG. 33 POWER TRIM & TILT ASSY 1 — COMPONER Y PODER VARILLA 1

REF. NO.	PART NO. CODIGO Nº	DESCRIPTION DESCRIPCION	6ML1	6MM1				REMARKS OBSERVACIONES
27	6D8–43863–00	O-RING ANILLO EN O 3	1	1				
28	69J–43845–00	SCREW, MANUAL RELEASE TORNILLO DESCOPLO MANUAL	1	1				
29	6H1–43875–00	RING, SNAP ANILLO	1	1				
30	69J–4381C–00	FILTER 3 FIELTRO 3	2	2				
31	69J–43899–01	PLATE STOPPER PLACA	2	2				
32	69J–4389J–00	O-RING ANILLO O	2	2				
33	6ML–43830–00	GEAR PUMP ASSY ENGRANAJE BOMBA COMPL.	1	1				
34	93505–32038	.BALL .BOLA	4	4				
35	69J–4381C–00	.FILTER 3 .FIELTRO 3	1	1				
36	69J–4389J–00	.O-RING .ANILLO O	2	2				
37	93503–16003	.BALL .ESFERA	2	2				
38	6CJ–4384M–00	.PISTON, SHUTTLE 2 .PISTON 2	1	1				
39	69A–4384F–00	.SEAL, MAIN VALVE .ASIENTO	2	2				
40	99002–03600	.CIRCLIP .PRESILLA REDONDA	2	2				
41	69J–43894–00	.SPRING, SHUTTLE RETURN .RESORTE	2	2				
42	6CJ–43841–00	.PISTON, SHUTTLE .PISTON	1	1				
43	6H1–43883–00	.O-RING .ANILLO EN O 10	1	1				
44	60V–4386A–00	.PIN, ABSORBER VALVE .PASADOR VALVULA ABSORBER	2	2				
45	69J–43853–00	.SPRING, MAIN VALVE .RESORTE	2	2				
46	6CJ–43893–00	.WASHER .RONDANA	2	2				
47	93501–08001	.BALL .BOLA	2	2				
48	93210–08391	.O-RING .ANILLO O	1	1				
49	69J–43851–00	.SEAT, RELIEF VALVE .ASIENTO VALVULA DE DESCARGA	1	1				
50	63P–43844–20	.PIN, VALVE SUPPORT .PASADOR VALVULA SOPORTE	1	1				
51	93210–064A5	.O-RING .ANILLO O	1	1				
52	69J–43855–00	.SPRING, UP RELIEF .RESORTE SEGURIDAD SUPERIOR	1	1				
53	6CJ–43843–00	.SCREW, VALVE LOCK .TORNILLO	2	2				

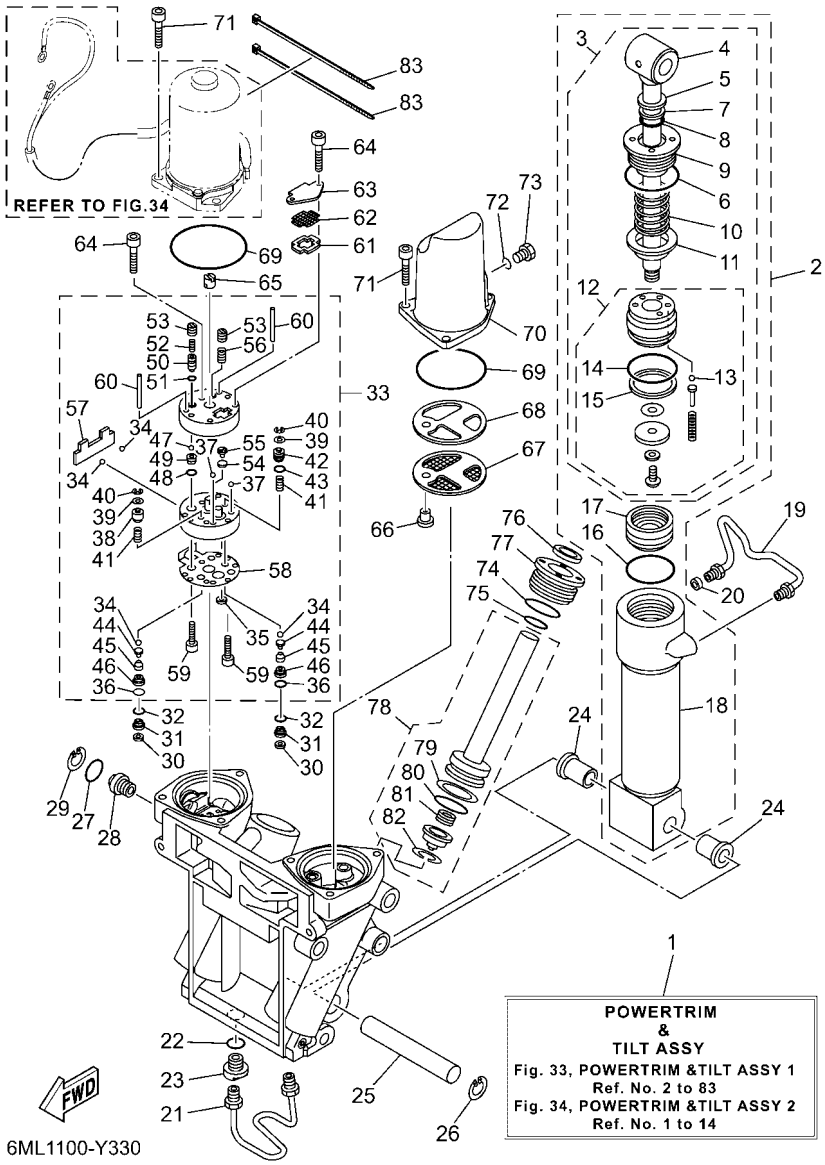

FIG. 33 POWER TRIM & TILT ASSY 1 — COMPONER Y PODER VARILLA 1

REF. NO.	PART NO. CODIGO Nº	DESCRIPTION DESCRIPCION	6ML1	6MM1				REMARKS OBSERVACIONES
54	6H1–4384G–11	.SEAL, RELIEF VALVE .ASIENTO	1	1				
55	6H1–43844–10	.PIN, VALVE SUPPORT .PASADOR VALVULA SOPORTE	1	1				
56	6H1–43856–10	.SPRING, DOWN RELIEF .RESORTE SEGURIDAD	1	1				
57	69J–43854–00	.SPRING, MANUAL RELEASE .RESORTE DESCOPLO MANUAL	1	1				
58	69J–4384G–00	.SEAL, RELIEF VALVE .ASIENTO	1	1				
59	91318–05025	.BOLT .TORNILLO	2	2				
60	93604–35236	.PIN, DOWEL .PASADOR DE CLAVIJA	2	2				
61	69J–43871–00	RING, BACK UP ANILLO	1	1				
62	69J–43816–00	FILTER 1 FIELTRO 1	1	1				
63	69J–4381J–00	PLATE PLACA	1	1				
64	91318–05040	BOLT TORNILLO	3	3				
65	69J–43831–00	CONNECTOR, SHAFT CONEXION EJE	1	1				
66	69J–4388H–00	PLUG TAPON	1	1				
67	69J–43817–00	FILTER 2 FIELTRO 2	1	1				
68	69J–4388F–00	SPACER ESPACIADOR	1	1				
69	93210–66001	O-RING ANILLO O	2	2				
70	6KA–43828–00	BODY, RESERVOIR CUERPO DEPOSITO	1	1				
71	69J–43888–00	BOLT, SOCKET TORNILLO ENCASTRE	6	6				
72	93210–09165	O-RING ANILLO O	1	1				
73	6H1–43829–00	PLUG, RESERVOIR TAPON DEPOSITO	1	1				
74	61A–43861–00	O-RING ANILLO EN O 1	2	2				
75	6D8–43863–00	O-RING ANILLO EN O 3	2	2				
76	63P–43812–20	SEAL, DUST SELLO DE POLVO	2	2				
77	6ML–43821–00	SCREW, TRIM CYLINDER END TORNILLO CILINDRO EXTREMO	2	2				
78	69J–43820–01	TRIM PISTON SUB ASSY ELEVADOR PISTON COMPL.	2	2				
79	61A–43874–00	.RING, BACK UP .ANILLO	1	1				
80	61A–43864–00	.O-RING .ANILLO EN O 4	1	1				

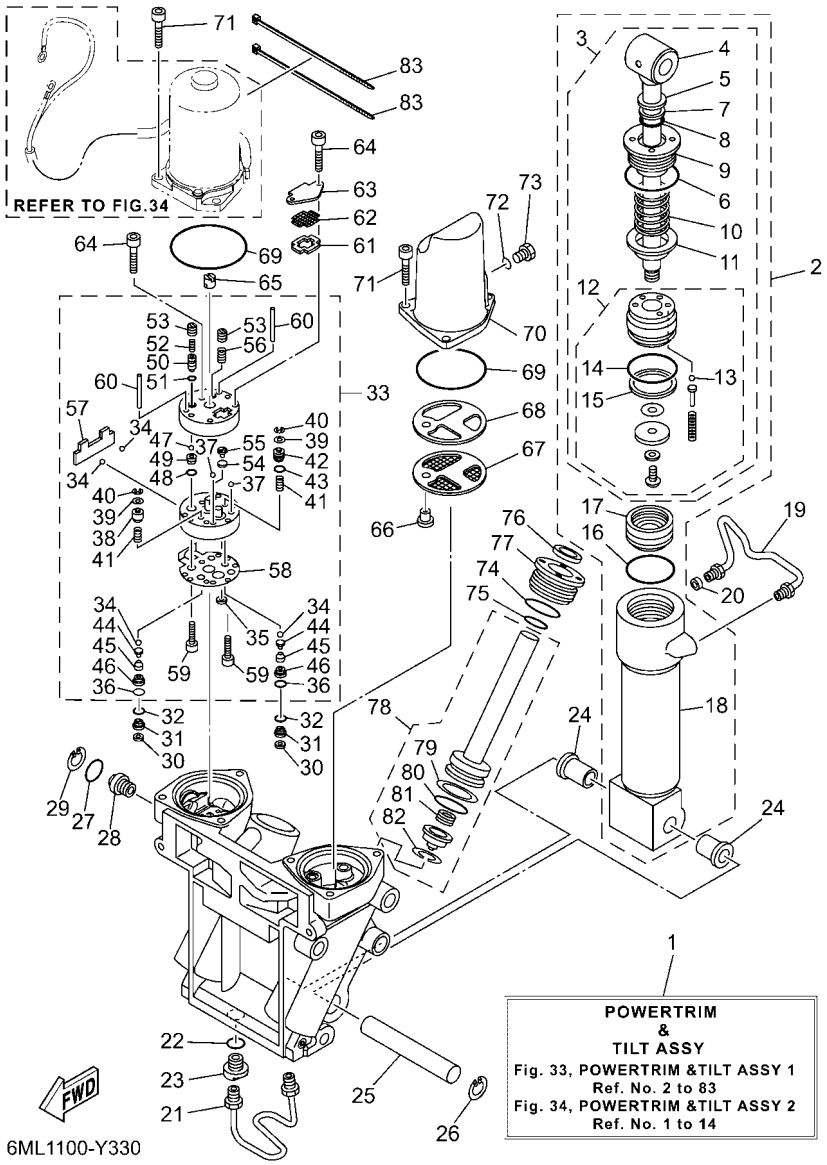

FIG. 33 POWER TRIM & TILT ASSY 1 — COMPONER Y PODER VARILLA 1

REF. NO.	PART NO. CODIGO Nº	DESCRIPTION DESCRIPCION	6ML1	6MM1				REMARKS OBSERVACIONES
81	61A–4384H–10	.SPRING .RESORTE	1	1				
82	61A–43875–10	.RING, SNAP .ANILLO	1	1				
83	90464–99004	CLAMP BRIDA	2	2				

FIG. 34 POWER TRIM & TILT ASSY 2 — COMPONER Y PODER VARILLA 2

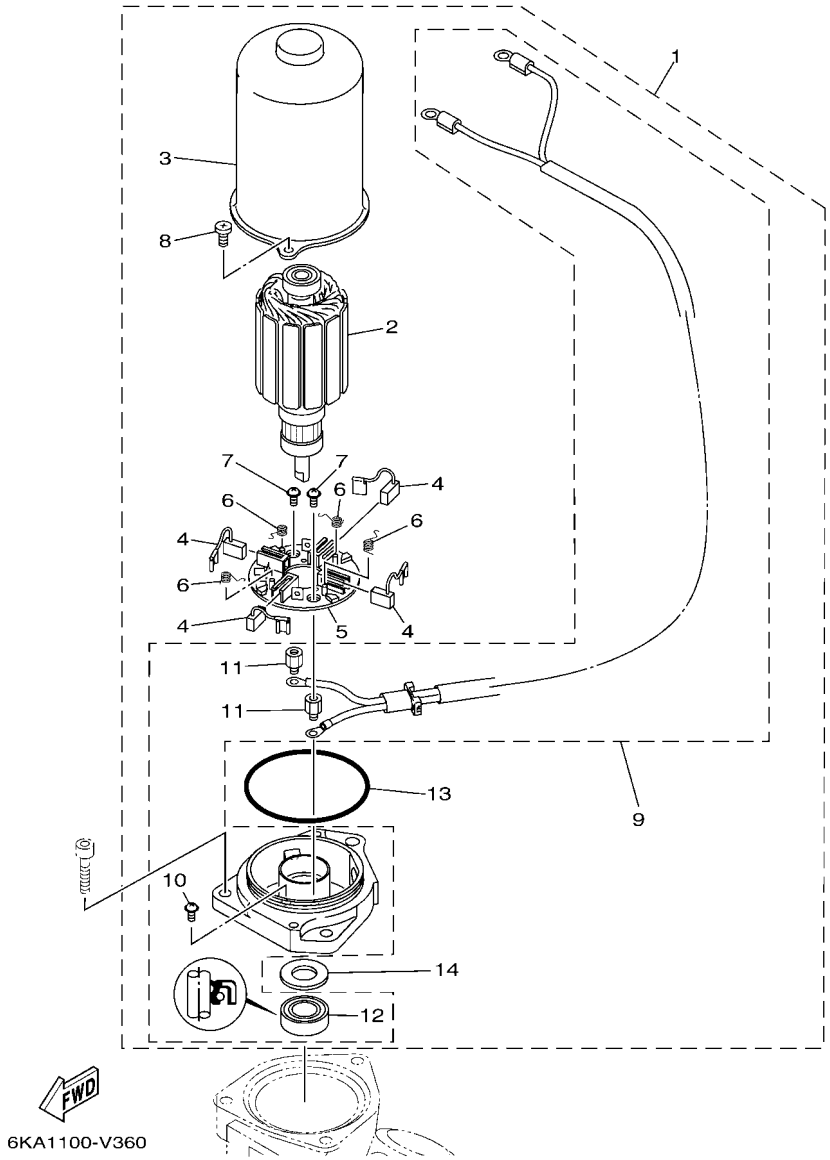

REF. NO.	PART NO. CODIGO Nº	DESCRIPTION DESCRIPCION	6ML1	6MM1				REMARKS OBSERVACIONES
1	6ML–43880–00	MOTOR ASSY MOTOR COMPL.	1	1				
2	6KA–43805–00	.ARMATURE ASSY .INDUCIDO COMPL.	1	1				
3	6KA–43804–01	.STATOR ASSY .ESTATOR COMPL	1	1				
4	6KA–43892–00	.BRUSH 2 .ESCOBILLA 2	4	4				
5	6KA–43806–00	.BRUSH HOLDER ASSY .ESCOBILLA SOSTEN COMPL.	1	1				
6	6KA–4386K–00	.SPRING, BRUSH .RESORTE, ESCOBILLA	4	4				
7	97602–04306	.SCREW, PAN HEAD WITH WASHER .TORNILLO CON RONDONA	2	2				
8	6KA–43879–00	.SCREW, WITH WASHER .TORNILLO CON RONDANA	2	2				
9	6ML–43881–00	.FRAME, END .CUADRO EXTERMO	1	1				
10	97602–04308	..SCREW, PAN HEAD WITH WASHER ..TORNILLO CON RONDONA	1	1				
11	6KA–4388F–00	..SPACER ..ESPACIADOR	2	2				
12	6KA–43882–00	..OIL SEAL ..SELLO ACEITE	1	1				
13	6KA–43862–00	.O-RING .ANILLO EN O 2	1	1				
14	6KA–4387G–00	.WASHER .ARANDELA	1	1				

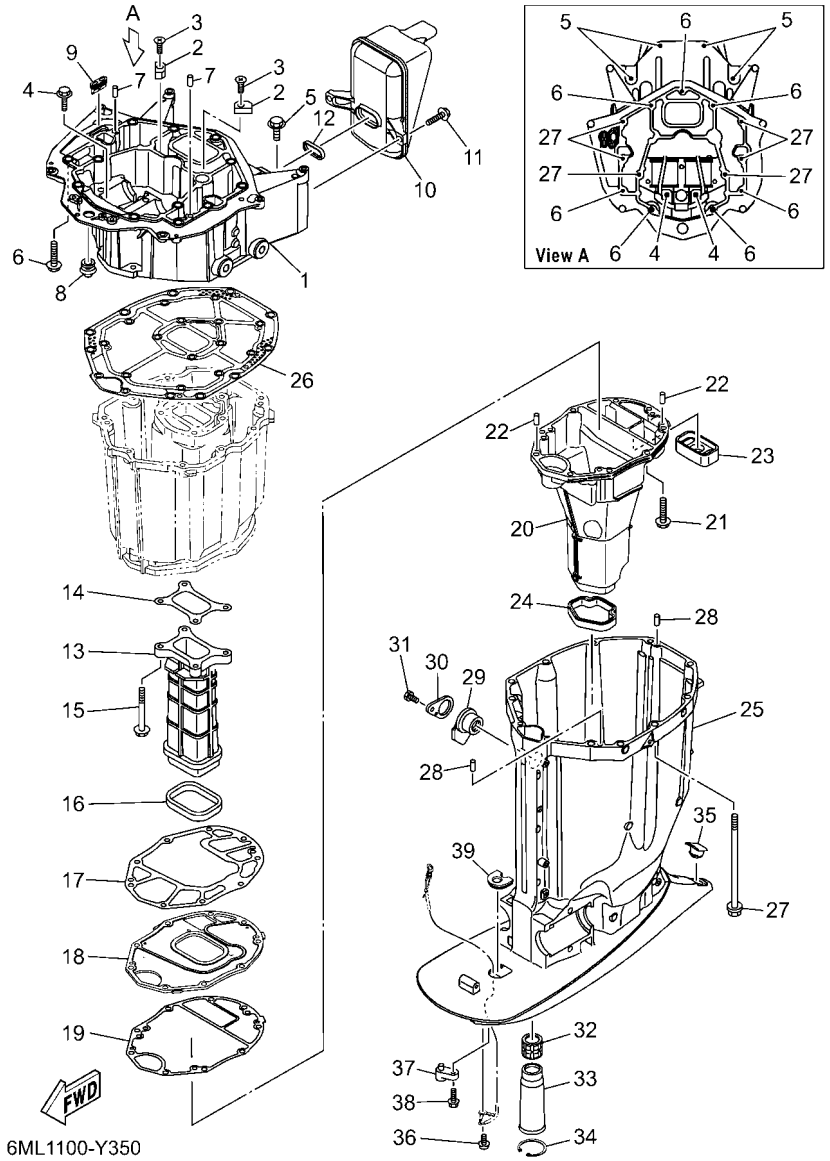

FIG. 35 UPPER CASING — FUNDA SUPERIOR

REF. NO.	PART NO. CODIGO Nº	DESCRIPTION DESCRIPCION	6ML1	6MM1				REMARKS OBSERVACIONES
1	6KA–41137–00	GUIDE, EXHAUST GUIA DE ESCAPE	1	1				
2	63P–11325–11	ANODE ANODO	2	2				
3	90151–06M02	SCREW, COUNTERSUNK TORNILLO EMBUTIDO	2	2				
4	90119–08182	BOLT, WITH WASHER TORNILLO CON ARANDELA	2	2				
5	97E75–10545	BOLT, HEXAGON W/W DEEP RECESS TORNILLO HEXAGONAL CON RONDONA	4	4				
6	97E75–10535	BOLT, HEXAGON W/W DEEP RECESS TORNILLO HEXAGONAL CON RONDONA	7	7				
7	93608–16M16	PIN, DOWEL PASADOR DE CLAVIJA	2	2				
8	6E5–42724–01	GROMMET TAPON	1	1				
9	67F–42717–00	RUBBER, SEAL 2 GOMA	1	1				
10	6KA–14750–00	SILENCER ASSY SILENCIADOR COMPLETO	1	1				
11	95D95–06020	BOLT, FLANGE DEEP RECESS CERROJO, REBORDE HUECO PROFUND	2	2				
12	6CB–14755–01	GASKET, SILENCER EMPAQUE DE SILENCIADOR	1	1				
13	6CB–41132–01	MANIFOLD, EXHAUST TUBO MULTIPLE DE ESCAPE	1	1				
14	6CB–41134–00	GASKET, EXHAUST MANIFOLD EMPAQUE	1	1				
15	97E75–08560	BOLT, HEXAGON W/W DEEP RECESS TORNILLO HEXAGONAL CON RONDONA	4	4				
16	6CB–41138–00	SEAL, EXT. 1 SELLO, ESCAPE 1	1	1				
17	6CB–41135–00	GASKET, EXHAUST MANIFOLD EMPAQUE	1	1				
18	6KA–45181–00	PLATE PLACA	1	1				
19	6CE–41136–00	GASKET, EXHAUST MANIFOLD 4 EMPAQUE	1	1				
20	6KA–14711–00	MUFFLER 1 SILENCIADOR 1	1	1				
21	97E75–08535	BOLT, HEXAGON W/W DEEP RECESS TORNILLO HEXAGONAL CON RONDONA	9	9				
22	93606–19M23	PIN, DOWEL PASADOR DE CLAVIJA	2	2				
23	6CE–45127–00	SEAL SELLO DE GOMA	1	1				
24	6CE–45123–00	GASKET, MUFFLER EMPAQUE SILENCIADOR	1	1				
25	6KA–45111–01–8D	CASING, UPPER CAJA SUPERIOR	1	1				GRAY GRAY
	6KA–45111–01–CE	CASING, UPPER CAJA SUPERIOR	1	1				WHITE WHITE
26	6CB–45113–10	GASKET, UPPER CASING EMPAQUE	1	1				

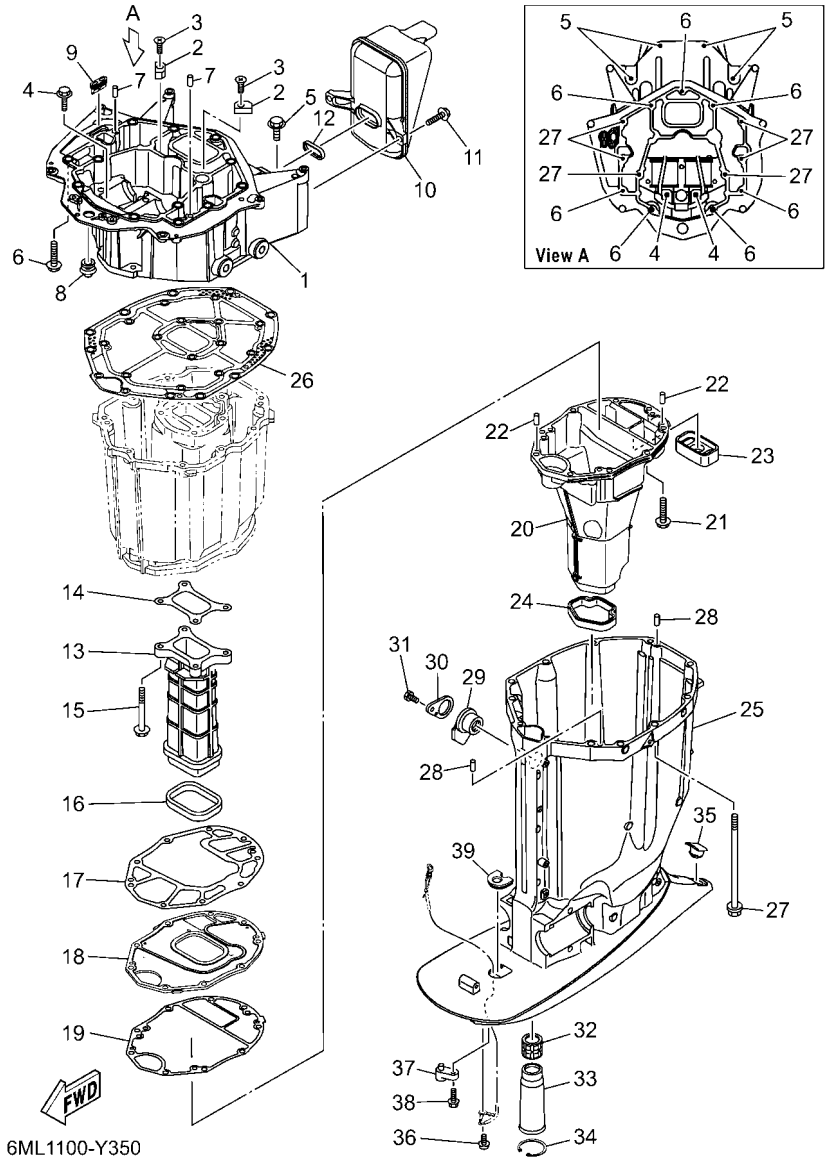

FIG. 35 UPPER CASING — FUNDA SUPERIOR

REF. NO.	PART NO. CODIGO Nº	DESCRIPTION DESCRIPCION	6ML1	6MM1				REMARKS OBSERVACIONES
27	90119–10070	BOLT, WITH WASHER TORNILLO CON ARANDELA	6	6				
28	93608–16M16	PIN, DOWEL PASADOR DE CLAVIJA	2	2				
29	6BB–15316–01	DAMPER 1 AMORTIGUADOR 1	1	1				
30	6BB–45152–01	COVER, UPPER CASING 2 CUBIERTA FUNDA SUPERIOR 2	1	1				
31	97D95–06012	BOLT, HEXAGON DEEP RECESS TORNILLO HEXAGONAL	1	1				
32	69J–45318–01	BUSHING, DRIVE SHAFT BUJE, EJE DE MANDO	1	1				
33	6KA–46153–00	COLLAR, GUIDE COLLAR DE GUIA	1	1				
34	93420–50093	CIRCLIP SEGURO	1	1				
35	61A–45155–01	CAP TAPA	1	1				
36	95D95–06010	BOLT, FLANGE DEEP RECESS CERROJO, REBORDE HUECO PROFUND	1	1				
37	6ML–45379–00	NIPPLE, HOSE NIPLE DE MANGUERA	1	1				
38	90119–06287	BOLT, WITH WASHER TORNILLO CON ARANDELA	1	1				
39	6KA–44521–00	SEAL SELLO DE GOMA	1	1				

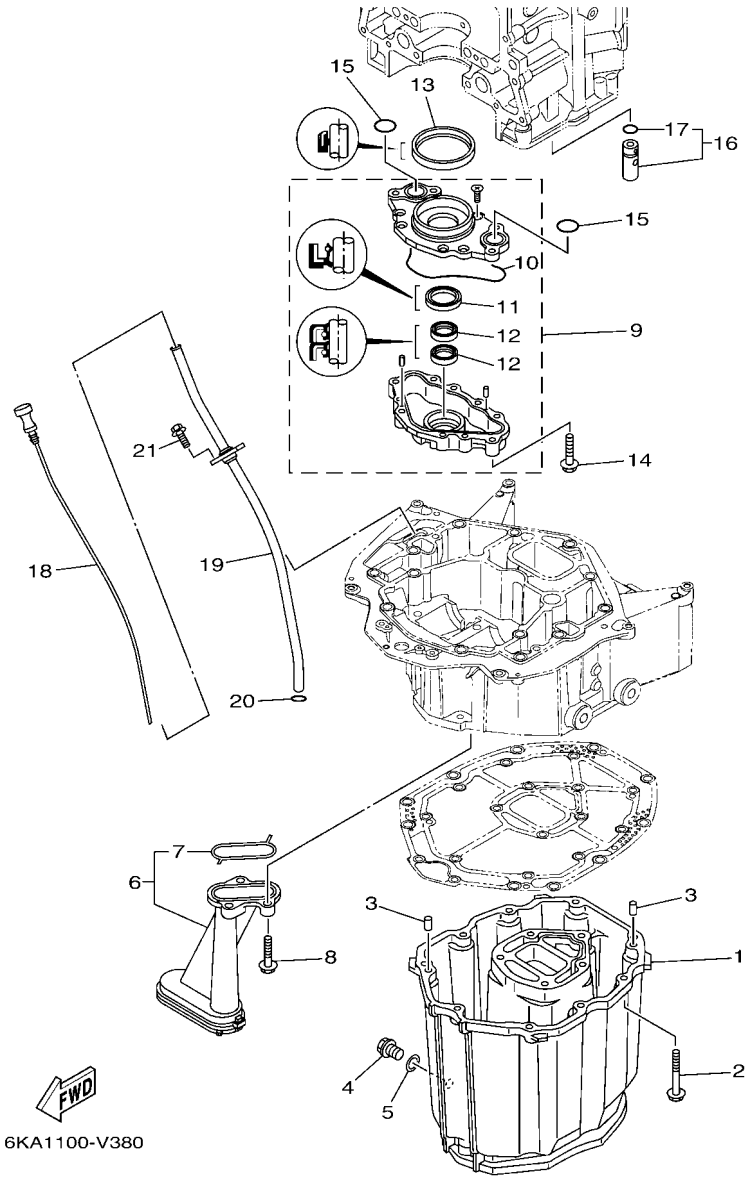

FIG. 36 OIL PAN

OIL PAN

REF. NO.	PART NO. CODIGO Nº	DESCRIPTION DESCRIPCION	6ML1	6MM1				REMARKS OBSERVACIONES
1	6CB–15311–01	OIL PAN BANDEJA DE ACEITE	1	1				
2	97E75–08535	BOLT, HEXAGON W/W DEEP RECESS TORNILLO HEXAGONAL CON RONDONA	10	10				
3	93608–16M16	PIN, DOWEL PASADOR DE CLAVIJA	2	2				
4	90340–14M06	PLUG, STRAIGHT SCREW TORNILLO, DE DRENAJE	1	1				
5	90430–14M09	GASKET JUNTA	1	1				
6	6CB–13411–00	STRAINER, OIL FILTRO DE ACEITE	1	1				
7	6AW–13415–00	.SEAL, OIL STRAINER .SELLO COLADOR ACEITE	1	1				
8	95812–06025	BOLT, FLANGE TORNILLO DE REBORDE	3	3				
9	6CB–13300–00	OIL PUMP ASSY BOMBA DE ACEITE COMPLETA	1	1				
10	6CB–13329–00	.GASKET, PUMP COVER .EMPAQUE TAPA DE BOMBA	1	1				
11	6AW–13119–00	.OIL SEAL .SELLO ACEITE	1	1				
12	69J–13631–00	.OIL SEAL .SELLO ACEITE	2	2				
13	6CB–11355–00	SEAL, CYLINDER 1 RETEN ACEITE CILINDRO 1	1	1				
14	95D75–06040	BOLT, FLANGE DEEP RECESS CERROJO, REBORDE HUECO PROFUND	4	4				
15	93210–26658	O-RING ANILLO O	2	2				
16	6CB–13490–00	RELIEF VALVE ASSY VALVELA DE DESCOMPRESION	1	1				
17	6CB–13473–00	.O-RING .ANILLO O	1	1				
18	6ML–15362–00	PLUG, OIL LEVEL TAPON DEL NIVEL DE ACEITE	1	1				
19	6KA–15377–00	GUIDE, INLET GUIA DE ENTRADA	1	1				
20	93210–19MJ3	O-RING ANILLO O	1	1				
21	95D95–06016	BOLT, FLANGE DEEP RECESS CERROJO, REBORDE HUECO PROFUND	2	2				

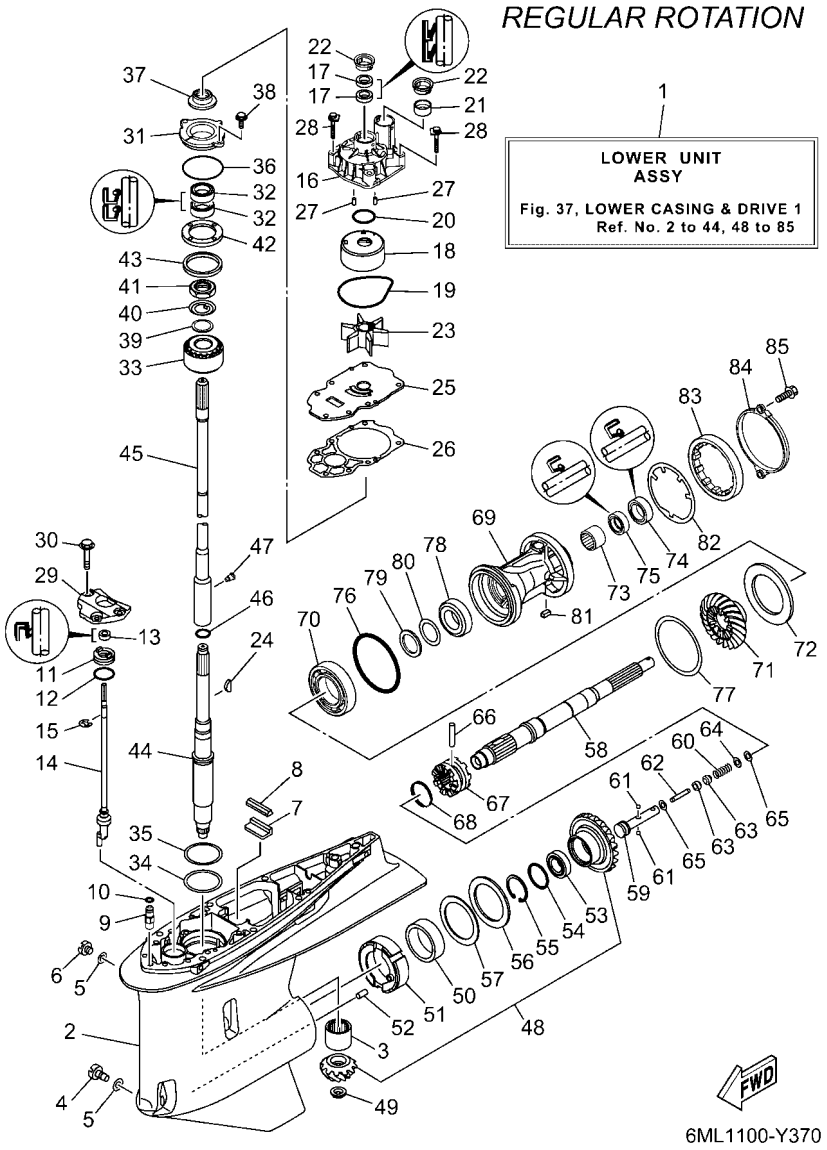

FIG. 37 LOWER CASING & DRIVE 1 — IMPULSOR E INFERIOR 1

REF. NO.	PART NO. CODIGO Nº	DESCRIPTION DESCRIPCION	6ML1	6MM1				REMARKS OBSERVACIONES
1	6ML–45300–00–8D	LOWER UNIT ASSY CONJUNTO UNIDAD INFERIOR	1					GRAY, RH GRAY, RH
	6ML–45300–00–CE	LOWER UNIT ASSY CONJUNTO UNIDAD INFERIOR	1					WHITE, RH WHITE, RH
2	6KA–45301–00–8D	CASING, LOWER FUNDA INFERIOR COMPLETA	1					GRAY GRAY
	6KA–45301–00–CE	CASING, LOWER FUNDA INFERIOR COMPLETA	1					WHITE WHITE
3	93311–83280	BEARING COJINETE DE RODILLOS	1					
4	688–45341–10	PLUG, DRAIN TAPON, DREN	1					
5	90430–08003	GASKET JUNTA	2					
6	90340–08002	PLUG, STRAIGHT SCREW TORNILLO, DE DRENAJE	1					
7	663–45376–00	GUIDE, SEAL DAMPER GUIA DE SELLO GOMA	1					
8	6CE–45375–00	DAMPER, SEAL GOMA DE SELLO	1					
9	63P–45378–00	NIPPLE, HOSE NIPLE MANGUERA	1					
10	93210–07003	O-RING ANILLO O	1					
11	6CE–45321–20	PLATE PLACA	1					
12	93210–33M49	O-RING ANILLO O	1					
13	93106–10001	OIL SEAL SELLO ACEITE	1					
14	6KA–44150–00	SHIFT CAM ASSY CONJUNTO EJE LEVA COMPL.	1					
15	99001–09600	CIRCLIP PRESILLA REDONDA	1					
16	6CE–44311–01	HOUSING, WATER PUMP CAJA BOMBA DE AGUA	1					
17	93104–22M07	OIL SEAL SELLO ACEITE	2					
18	6AW–44322–00	INSERT, CARTRIDGE CARTUCHO	1					
19	93210–94003	O-RING ANILLO O	1					
20	93210–37160	O-RING ANILLO O	1					
21	6AW–44365–01	DAMPER, WATER SEAL 1 HULE DE SELLO DE AGUA 1	1					
22	6AW–44312–00	COVER, WATER PUMP HOUSING CUBIERTA CAJA BOMBA DE AGUA	2					
23	6CE–44352–00	IMPELLER IMPULSOR	1					
24	90280–04002	KEY, WOODRUFF CUNA WOODRUFF	1					
25	6CE–44323–01	OUTER PLATE, CARTRIDGE PLACA EXTERIOR DEL CARTUCHO	1					

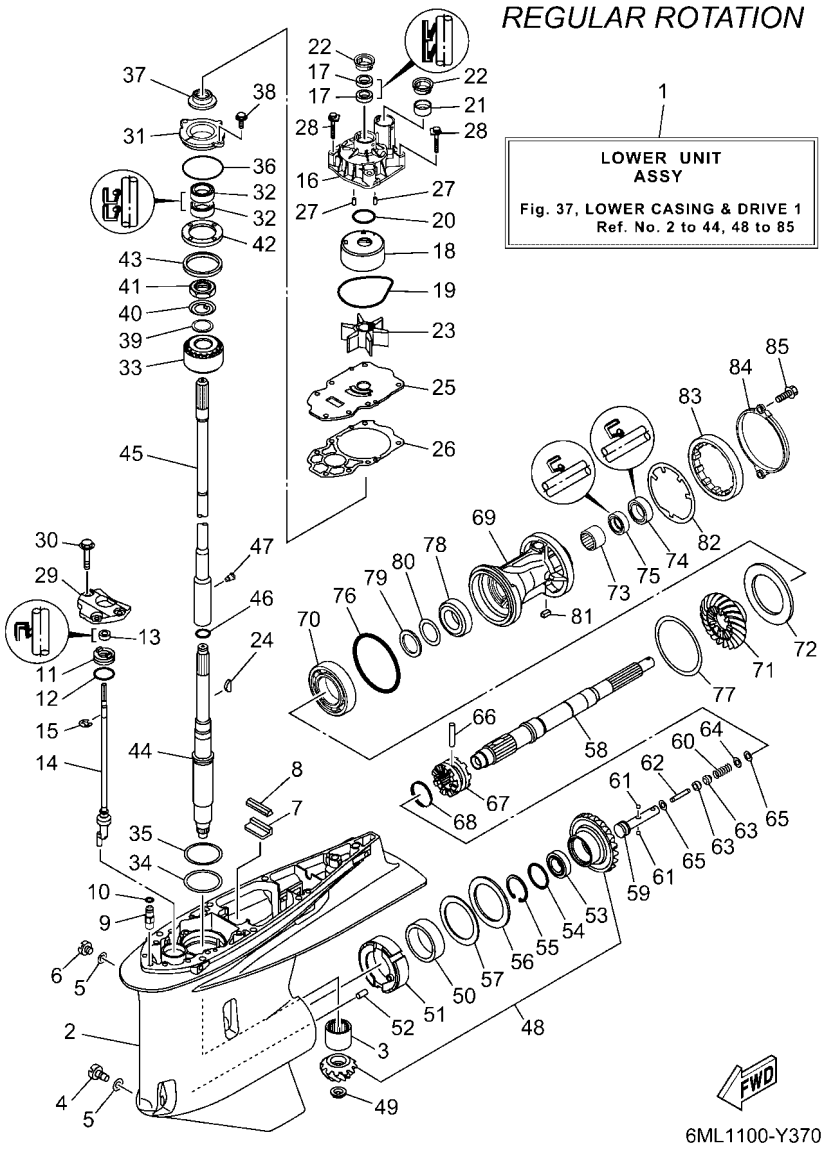

FIG. 37 LOWER CASING & DRIVE 1 — IMPULSOR E INFERIOR 1

REF. NO.	PART NO. CODIGO Nº	DESCRIPTION DESCRIPCION	6ML1	6MM1				REMARKS OBSERVACIONES
26	6CE–44315–00	GASKET, WATER PUMP EMPAQUE	1					
27	93606–12019	PIN, DOWEL PASADOR DE CLAVIJA	2					
28	90119–08191	BOLT, WITH WASHER TORNILLO CON ARANDELA	4					
29	6CB–44312–00	COVER, WATER PUMP HOUSING CUBIERTA CAJA BOMBA DE AGUA	1					
30	90119–08180	BOLT, WITH WASHER TORNILLO CON ARANDELA	3					
31	6AW–45335–00–CA	HOUSING, OIL SEAL CAJA DEL SELLO DE ACEITE	1					
32	93101–28019	OIL SEAL SELLO ACEITE	2					
33	93399–99962	BEARING COJINETE	1					
34	90201–68008	WASHER, PLATE ARANDELA PLANA	1					
35	6AW–45587–00	SHIM (T:0.10MM) LAINA (T:0.10MM)	1					UR UR
	6AW–45587–10	SHIM (T:0.12MM) LAINA (T:0.12MM)	1					UR UR
	6AW–45587–20	SHIM (T:0.15MM) LAINA (T:0.15MM)	1					UR UR
	6AW–45587–30	SHIM (T:0.18MM) LAINA (T:0.18MM)	1					UR UR
	6AW–45587–40	SHIM (T:0.30MM) LAINA (T:0.30MM)	1					UR UR
	6AW–45587–50	SHIM (T:0.40MM) LAINA (T:0.40MM)	1					UR UR
	6AW–45587–60	SHIM (T:0.50MM) LAINA (T:0.50MM)	1					UR UR
36	93210–69MG6	O-RING ANILLO O	1					
37	6KA–45344–00	COVER, OIL SEAL CUBIERTA SELLO ACEITE	1					
38	97E95–08520	BOLT, HEXAGON W/W DEEP RECESS TORNILLO HEXAGONAL CON RONDONA	2					
39	90201–301U7	WASHER, PLATE ARANDELA PLANA	1					
40	90214–30003	WASHER, CLAW ARANDELA DE POSICION	1					
41	90170–30M18	NUT TUERCA	1					
42	6AW–45244–00	NUT TUERCA	1					
43	6T5–45539–00	SPACER 2 ESPACIADOR 2	1					
44	6KA–45501–00	DRIVE SHAFT COMP. EJE DE MANDO COMPL.	1					
45	6KA–45802–00	INTERMEDI. DRIVE SHAFT COMP. INTERMEDIO EJE DE MANDO COMPL.	1					UR X(25.2") UR X(25.2")
	6KA–45802–10	INTERMEDI. DRIVE SHAFT COMP. INTERMEDIO EJE DE MANDO COMPL.	1					UR U(30.2") UR U(30.2")

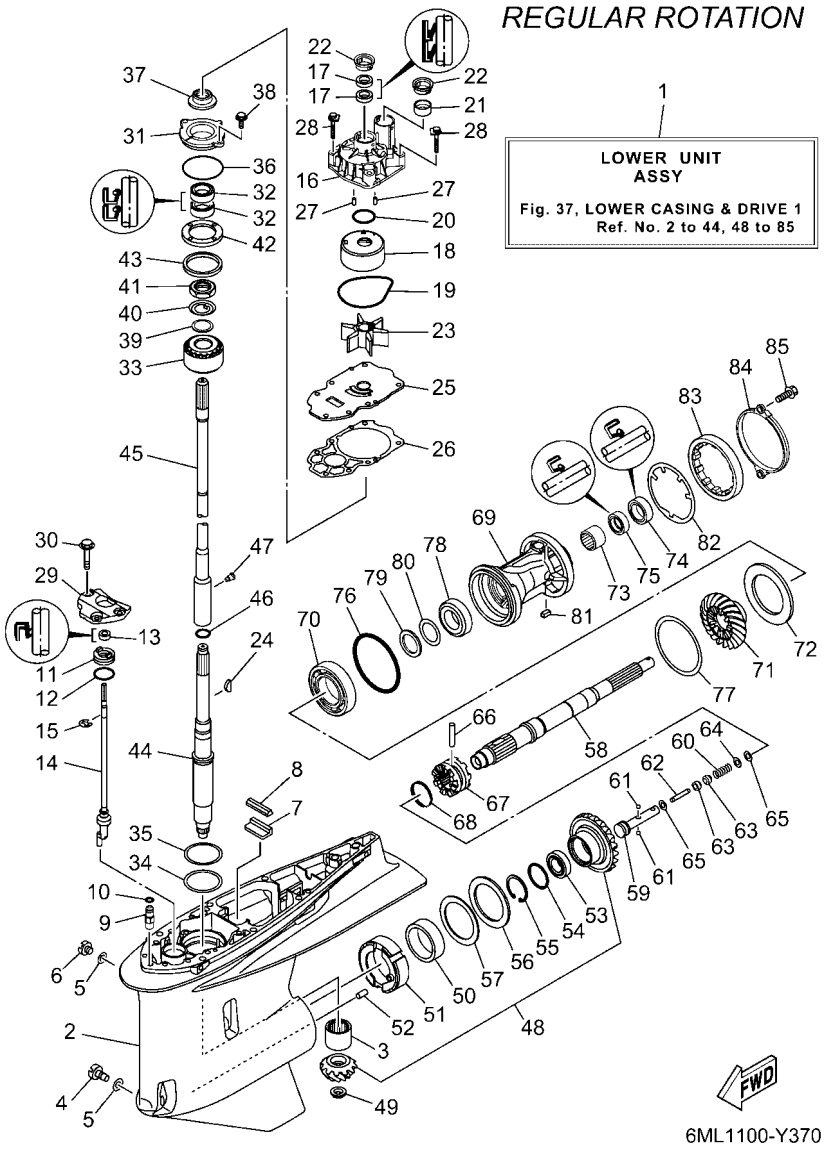

FIG. 37 LOWER CASING & DRIVE 1 — IMPULSOR E INFERIOR 1

REF. NO.	PART NO. CODIGO Nº	DESCRIPTION DESCRIPCION	6ML1	6MM1				REMARKS OBSERVACIONES
46	93210–22MF1	O-RING ANILLO O	1					
47	90149–05048	SCREW TORNILLO DE REGLAJE	1					
48	6KA–45550–00	GEAR SET JUEGO DE ENGRANAJE	1					
49	90179–16017	NUT TUERCA	1					
50	93311–85894	BEARING COJINETE DE RODILLOS	1					
51	6CB–45824–00	ADAPTER ADAPTADOR	1					
52	93608–16M16	PIN, DOWEL PASADOR DE CLAVIJA	1					
53	93332–000A4	BEARING COJINETE	1					
54	90201–41008	WASHER, PLATE ARANDELA PLANA	1					
55	99009–47500	CIRCLIP PRESILLA REDONDA	1					
56	93340–67011	BEARING COJINETES CON RODAMIENTOS	1					
57	6CB–45567–00	SHIM (T:2.00MM) LAINA (T:2.00MM)	1					UR UR
	6CB–45567–10	SHIM (T:2.03MM) LAINA (T:2.03MM)	1					UR UR
	6CB–45567–20	SHIM (T:2.06MM) LAINA (T:2.06MM)	1					UR UR
	6CB–45567–30	SHIM (T:2.09MM) LAINA (T:2.09MM)	1					UR UR
	6CB–45567–40	SHIM (T:2.12MM) LAINA (T:2.12MM)	1					UR UR
	6CB–45567–50	SHIM (T:2.15MM) LAINA (T:2.15MM)	1					UR UR
58	6CB–45611–00	SHAFT, PROPELLER EJE PROPUSOR	1					
59	6CB–45634–00	SLIDE, SHIFT DESLIZADOR, CAMBIO	1					
60	90501–10M77	SPRING, COMPRESSION RESORTE DE COMPRESION	1					
61	93501–04011	BALL BOLA	2					
62	6H1–45668–00	SHAFT, FREE 1 EJE 1	1					
63	61A–45635–00	PLUNGER, SHIFT EMBOLO DE CAMBIO	2					
64	90201–02M00	WASHER, PLATE ARANDELA PLANA	1					
65	90183–02M03	NUT, SPRING TUERCA DE RESORTE	2					
66	90250–08M07	PIN, STRAIGHT PASADOR CILINDRICO	1					
67	6ML–45631–00	CLUTCH, DOG EMBRAGUE DE GARRA	1					

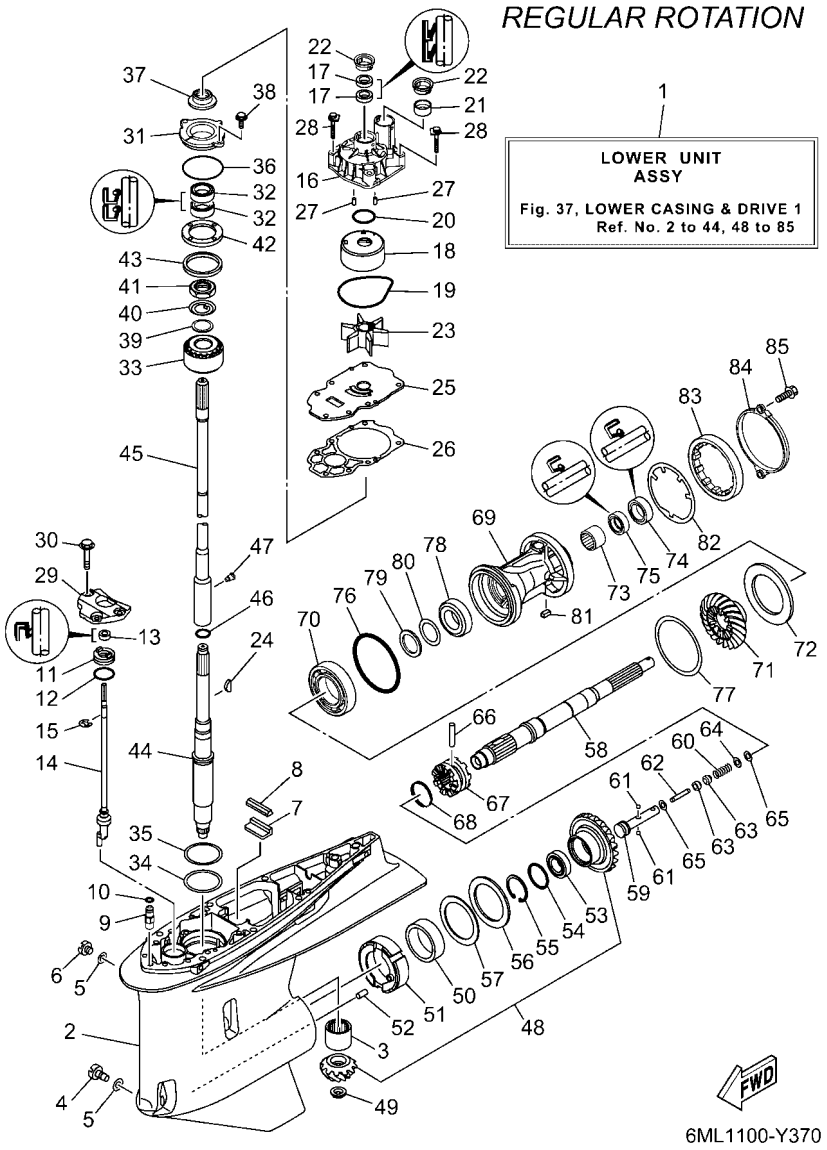

FIG. 37 LOWER CASING & DRIVE 1 — IMPULSOR E INFERIOR 1

REF. NO.	PART NO. CODIGO Nº	DESCRIPTION DESCRIPCION	6ML1	6MM1				REMARKS OBSERVACIONES
68	6E5–45633–01	RING, CROSS PIN ANILLO DE PASADOR	1					
69	6CE–45332–00–CA	HOUSING, BEARING CAJA BALERO 2	1					
70	93306–209U0	BEARING COJINETE	1					
71	6KA–45571–00	GEAR 2 (21T) ENGRANAJE 2 (21T)	1					
72	6CB–45576–00	WASHER, THRUST 2 ARANDELA DE EMPUJE AXIAL 2	1					
73	93315–43061	BEARING COJINETE DE RODILLOS	1					
74	93101–30030	OIL SEAL SELLO ACEITE	1					
75	93101–30019	OIL SEAL SELLO ACEITE	1					
76	93211–02001	O-RING ANILLO O	1					
77	6CB–45577–00	SHIM (T:0.10MM) LAINA (T:0.10MM)	1					UR UR
	6CB–45577–10	SHIM (T:0.12MM) LAINA (T:0.12MM)	1					UR UR
	6CB–45577–20	SHIM (T:0.15MM) LAINA (T:0.15MM)	1					UR UR
	6CB–45577–30	SHIM (T:0.18MM) LAINA (T:0.18MM)	1					UR UR
	6CB–45577–40	SHIM (T:0.30MM) LAINA (T:0.30MM)	1					UR UR
	6CB–45577–50	SHIM (T:0.40MM) LAINA (T:0.40MM)	1					UR UR
	6CB–45577–60	SHIM (T:0.50MM) LAINA (T:0.50MM)	1					UR UR
78	93332–000A5	BEARING COJINETE	1					
79	90201–32008	WASHER, PLATE ARANDELA PLANA	1					
80	676–45567–00	SHIM (T:0.7MM) LAINA (T:0.7MM)	1					UR UR
	676–45567–10	SHIM (T:0.8MM) LAINA (T:0.8MM)	1					UR UR
	676–45567–20	SHIM (T:0.9MM) LAINA (T:0.9MM)	1					UR UR
	676–45567–30	SHIM (T:1.0MM) LAINA (T:1.0MM)	1					UR UR
	676–45567–40	SHIM (T:1.1MM) LAINA (T:1.1MM)	1					UR UR
	676–45567–50	SHIM (T:1.2MM) LAINA (T:1.2MM)	1					UR UR
81	90282–05008	KEY, STRAIGHT CHAVETA, RECTA	1					
82	6CB–45383–00	WASHER, CLAW ARANDELA DE UNA	1					
83	6CB–45384–00	NUT TUERCA	1					

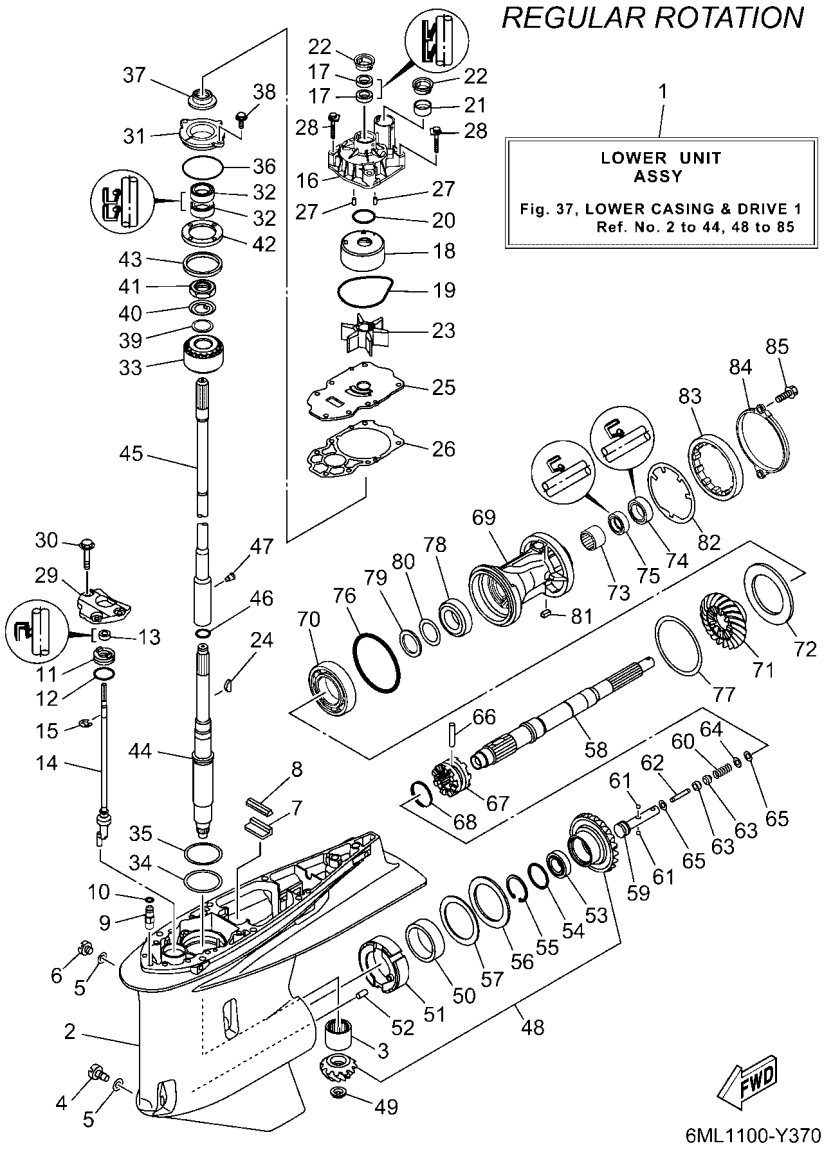

FIG. 37 LOWER CASING & DRIVE 1 — IMPULSOR E INFERIOR 1

REF. NO.	PART NO. CODIGO Nº	DESCRIPTION DESCRIPCION	6ML1	6MM1				REMARKS OBSERVACIONES
84	6CE–45361–10	CAP, LOWER CASING FUNDA INFERIOR	1					
85	90105–08M61	BOLT, FLANGE TORNILLO	2					

FIG. 38 LOWER CASING & DRIVE 2 — IMPULSOR E INFERIOR 2

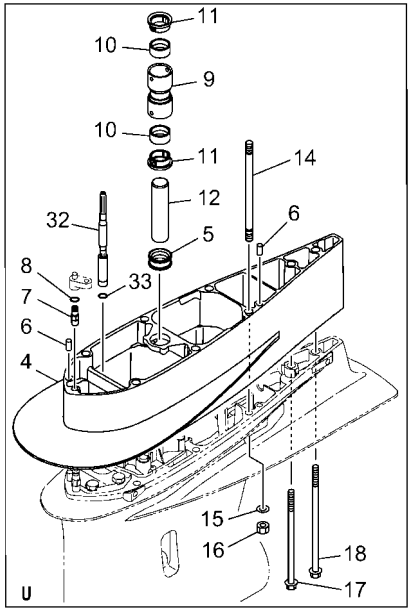

REGULAR ROTATION

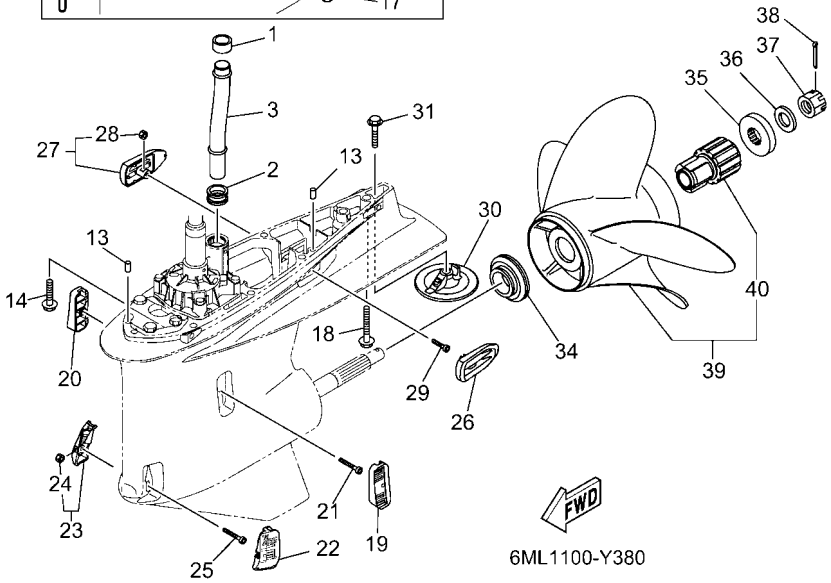

REF. NO.	PART NO. CODIGO Nº	DESCRIPTION DESCRIPCION	6ML1	6MM1				REMARKS OBSERVACIONES
1	6AW–44365–01	DAMPER, WATER SEAL 1 HULE DE SELLO DE AGUA 1	1					
2	6AW–44366–01	DAMPER, WATER SEAL 2 GOMA DEL SELLO DE AGUA 2	1					
3	6CE–44361–00	TUBE, WATER 1 TUBO DE AGUA 1	1					
4	6KA–45211–00–8D	EXTENSION EXTENSION	1					GRAY, U(30.2") GRAY, U(30.2")
	6KA–45211–00–CE	EXTENSION EXTENSION	1					WHITE, U(30.2") WHITE, U(30.2")
5	6AW–44366–01	DAMPER, WATER SEAL 2 GOMA DEL SELLO DE AGUA 2	1					U(30.2") U(30.2")
6	93608–16M16	PIN, DOWEL PASADOR DE CLAVIJA	2					U(30.2") U(30.2")
7	63P–45378–00	NIPPLE, HOSE NIPLE MANGUERA	1					U(30.2") U(30.2")
8	93210–07003	O-RING ANILLO O	1					U(30.2") U(30.2")
9	6CE–44362–00	TUBE, WATER 2 TUBO DE AGUA 2	1					U(30.2") U(30.2")
10	6AW–44365–01	DAMPER, WATER SEAL 1 HULE DE SELLO DE AGUA 1	2					U(30.2") U(30.2")
11	6AW–44312–00	COVER, WATER PUMP HOUSING CUBIERTA CAJA BOMBA DE AGUA	2					U(30.2") U(30.2")
12	6AW–44363–00	TUBE, WATER 3 TUBO DE AGUA 3	1					U(30.2") U(30.2")
13	93608–16M16	PIN, DOWEL PASADOR DE CLAVIJA	2					
14	90119–10024	BOLT, WITH WASHER TORNILLO CON ARANDELA	7					UR X(25.2") UR X(25.2")
	90116–10067	BOLT, STUD ESPARRAGO	6					UR U(30.2") UR U(30.2")
15	92995–10600	WASHER ARANDELA	6					U(30.2") U(30.2")
16	95380–10600	NUT TUERCA	6					U(30.2") U(30.2")
17	90119–10009	BOLT, WITH WASHER TORNILLO CON ARANDELA	1					U(30.2") U(30.2")
18	97E75–10570	BOLT, HEXAGON W/W DEEP RECESS TORNILLO HEXAGONAL CON RONDONA	1					UR X(25.2") UR X(25.2")
	90119–10008	BOLT, WITH WASHER TORNILLO CON ARANDELA	1					UR U(30.2") UR U(30.2")
19	6KA–45214–00	COVER, WATER INLET 1 CUBIERTA, ENTRADA AGUA 1	1					
20	6KA–45215–00	COVER, WATER INLET 2 CUBIERTA, ENTRADA AGUA 2	1					
21	90110–05039	BOLT, HEXAGON SOCKET HEAD TORNILLO ALLEN	1					
22	6CE–45224–00	COVER, WATER INLET 3 CUBIERTA, ENTRADA AGUA 3	1					
23	6CE–45225–00	COVER, WATER INLET 4 CUBIERTA, ENTRADA AGUA 4	1					
24	90185–05002	.NUT, NYLON .TUERCA AUTOBLOCANTE	1					

FIG. 38 LOWER CASING & DRIVE 2 — IMPULSOR E INFERIOR 2

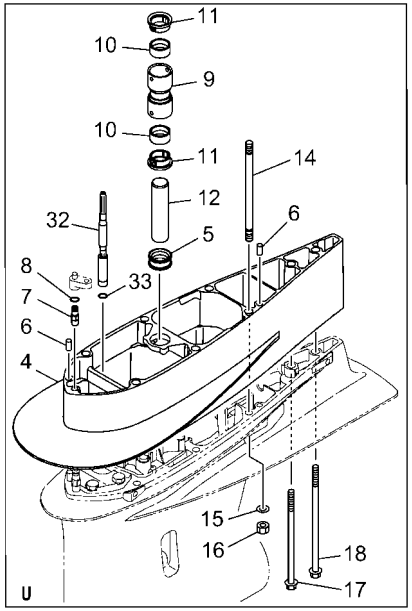

REGULAR ROTATION

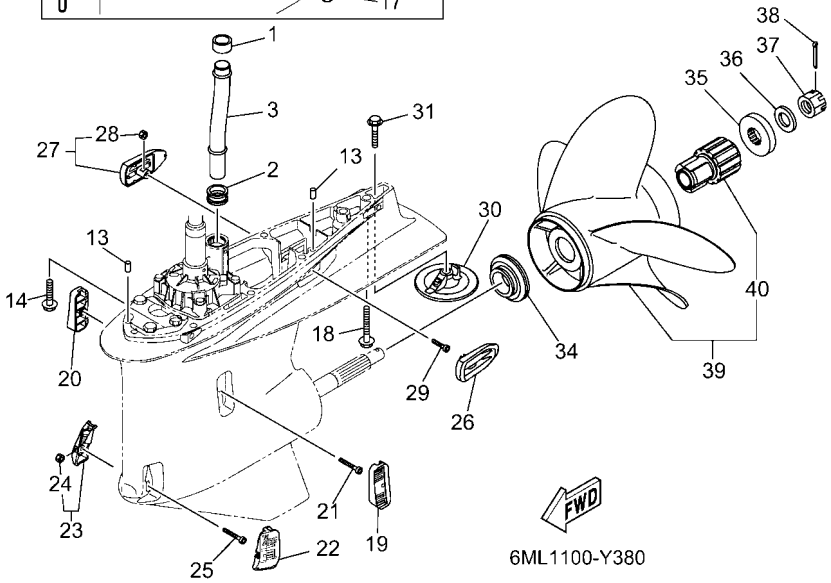

REF. NO.	PART NO. CODIGO Nº	DESCRIPTION DESCRIPCION	6ML1	6MM1				REMARKS OBSERVACIONES
25	90110–05039	BOLT, HEXAGON SOCKET HEAD TORNILLO ALLEN	1					
26	6KA–45254–00	COVER, OUTLET 1 CUBIERTA, SALIDA 1	1					
27	6KA–45255–00	COVER, OUTLET 2 CUBIERTA, SALIDA 2	1					
28	90185–05002	.NUT, NYLON .TUERCA AUTOBLOCANTE	1					
29	91380–05020	BOLT PERNO	1					
30	6CE–45373–00	ANODE ANODO	1					
31	90105–10M00	BOLT, FLANGE TORNILLO	1					
32	6KA–44190–00	JT. SHIFT ROD COMP. JUNTA VARILLA EJE COMPL.	1					U(30.2") U(30.2")
33	93210–09165	O-RING ANILLO O	1					U(30.2") U(30.2")
34	69J–45987–00	SPACER 1 ESPACIADOR 1	1					
35	688–45997–01	SPACER 2 ESPACIADOR 2	1					
36	92990–18200	WASHER ARANDELA PLANA	1					
37	90171–18M04	NUT, CASTLE TUERCA ENTALLADA	1					
38	91490–40030	PIN. COTTER CHAVETA	1					
39	6ML–45B76–00	PROPELLER (4X15"X20"-T) PROPELA (4X15"X20"-T)	1					UR UR
	6ML–45B78–00	PROPELLER (4X15"X21"-T) PROPELA (4X15"X21"-T)	1					UR UR
	6ML–45B80–00	PROPELLER (4X15"X22"-T) PROPELA (4X15"X22"-T)	1					UR UR
	6ML–45B82–00	PROPELLER (4X15"X23"-T) PROPELA (4X15"X23"-T)	1					UR UR
	6ML–45B84–00	PROPELLER (4X15"X24"-T) PROPELA (4X15"X24"-T)	1					UR UR
	6ML–45B86–00	PROPELLER (4X15"X25"-T) PROPELA (4X15"X25"-T)	1					UR UR
40	6CE–45C81–10	.DAMPER RUBBER, PROPELLER 1 .AMORTIGUADOR PROPELA 1	1					

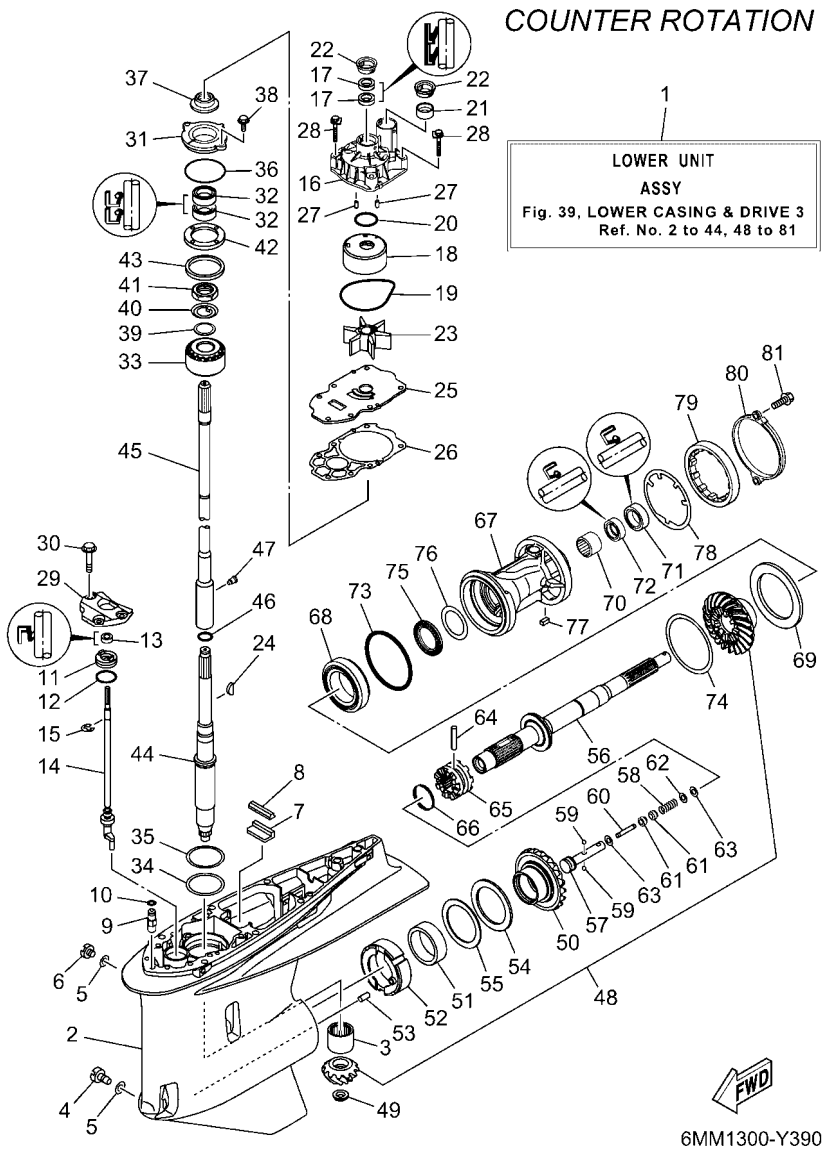

FIG. 39 LOWER CASING & DRIVE 3 — IMPULSOR E INFERIOR 3

REF. NO.	PART NO. CODIGO Nº	DESCRIPTION DESCRIPCION	6ML1	6MM1				REMARKS OBSERVACIONES
1	6MM–45300–00–8D	LOWER UNIT ASSY CONJUNTO UNIDAD INFERIOR		1				GRAY, LH GRAY, LH
	6MM–45300–00–CE	LOWER UNIT ASSY CONJUNTO UNIDAD INFERIOR		1				WHITE, LH WHITE, LH
2	6KA–45301–00–8D	CASING, LOWER FUNDA INFERIOR COMPLETA		1				GRAY GRAY
	6KA–45301–00–CE	CASING, LOWER FUNDA INFERIOR COMPLETA		1				WHITE WHITE
3	93311–83280	BEARING COJINETE DE RODILLOS		1				
4	688–45341–10	PLUG, DRAIN TAPON, DREN		1				
5	90430–08003	GASKET JUNTA		2				
6	90340–08002	PLUG, STRAIGHT SCREW TORNILLO, DE DRENAJE		1				
7	663–45376–00	GUIDE, SEAL DAMPER GUIA DE SELLO GOMA		1				
8	6CE–45375–00	DAMPER, SEAL GOMA DE SELLO		1				
9	63P–45378–00	NIPPLE, HOSE NIPLE MANGUERA		1				
10	93210–07003	O-RING ANILLO O		1				
11	6CE–45321–20	PLATE PLACA		1				
12	93210–33M49	O-RING ANILLO O		1				
13	93106–10001	OIL SEAL SELLO ACEITE		1				
14	6KB–44150–00	SHIFT CAM ASSY CONJUNTO EJE LEVA COMPL.		1				
15	99001–09600	CIRCLIP PRESILLA REDONDA		1				
16	6CE–44311–01	HOUSING, WATER PUMP CAJA BOMBA DE AGUA		1				
17	93104–22M07	OIL SEAL SELLO ACEITE		2				
18	6AW–44322–00	INSERT, CARTRIDGE CARTUCHO		1				
19	93210–94003	O-RING ANILLO O		1				
20	93210–37160	O-RING ANILLO O		1				
21	6AW–44365–01	DAMPER, WATER SEAL 1 HULE DE SELLO DE AGUA 1		1				
22	6AW–44312–00	COVER, WATER PUMP HOUSING CUBIERTA CAJA BOMBA DE AGUA		2				
23	6CE–44352–00	IMPELLER IMPULSOR		1				
24	90280–04002	KEY, WOODRUFF CUNA WOODRUFF		1				
25	6CE–44323–01	OUTER PLATE, CARTRIDGE PLACA EXTERIOR DEL CARTUCHO		1				

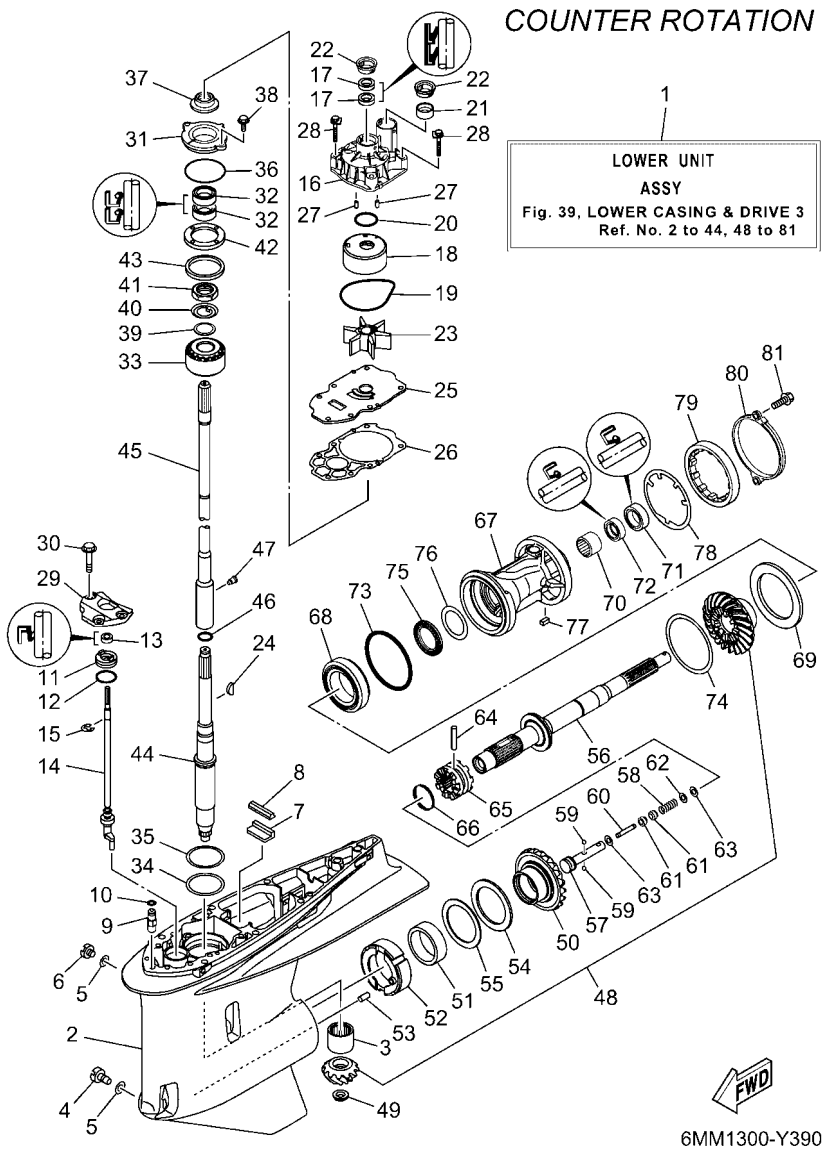

FIG. 39 LOWER CASING & DRIVE 3 — IMPULSOR E INFERIOR 3

REF. NO.	PART NO. CODIGO Nº	DESCRIPTION DESCRIPCION	6ML1	6MM1				REMARKS OBSERVACIONES
26	6CE–44315–00	GASKET, WATER PUMP EMPAQUE		1				
27	93606–12019	PIN, DOWEL PASADOR DE CLAVIJA		2				
28	90119–08191	BOLT, WITH WASHER TORNILLO CON ARANDELA		4				
29	6CB–44312–00	COVER, WATER PUMP HOUSING CUBIERTA CAJA BOMBA DE AGUA		1				
30	90119–08180	BOLT, WITH WASHER TORNILLO CON ARANDELA		3				
31	6AW–45335–00–CA	HOUSING, OIL SEAL CAJA DEL SELLO DE ACEITE		1				
32	93101–28019	OIL SEAL SELLO ACEITE		2				
33	93399–99962	BEARING COJINETE		1				
34	90201–68008	WASHER, PLATE ARANDELA PLANA		1				
35	6AW–45587–00	SHIM (T:0.10MM) LAINA (T:0.10MM)		1				UR UR
	6AW–45587–10	SHIM (T:0.12MM) LAINA (T:0.12MM)		1				UR UR
	6AW–45587–20	SHIM (T:0.15MM) LAINA (T:0.15MM)		1				UR UR
	6AW–45587–30	SHIM (T:0.18MM) LAINA (T:0.18MM)		1				UR UR
	6AW–45587–40	SHIM (T:0.30MM) LAINA (T:0.30MM)		1				UR UR
	6AW–45587–50	SHIM (T:0.40MM) LAINA (T:0.40MM)		1				UR UR
	6AW–45587–60	SHIM (T:0.50MM) LAINA (T:0.50MM)		1				UR UR
36	93210–69MG6	O-RING ANILLO O		1				
37	6KA–45344–00	COVER, OIL SEAL CUBIERTA SELLO ACEITE		1				
38	97E95–08520	BOLT, HEXAGON W/W DEEP RECESS TORNILLO HEXAGONAL CON RONDONA		2				
39	90201–301U7	WASHER, PLATE ARANDELA PLANA		1				
40	90214–30003	WASHER, CLAW ARANDELA DE POSICION		1				
41	90170–30M18	NUT TUERCA		1				
42	6AW–45244–00	NUT TUERCA		1				
43	6T5–45539–00	SPACER 2 ESPACIADOR 2		1				
44	6KA–45501–00	DRIVE SHAFT COMP. EJE DE MANDO COMPL.		1				
45	6KA–45802–00	INTERMEDI. DRIVE SHAFT COMP. INTERMEDIO EJE DE MANDO COMPL.		1				UR X(25.2") UR X(25.2")
	6KA–45802–10	INTERMEDI. DRIVE SHAFT COMP. INTERMEDIO EJE DE MANDO COMPL.		1				UR U(30.2") UR U(30.2")

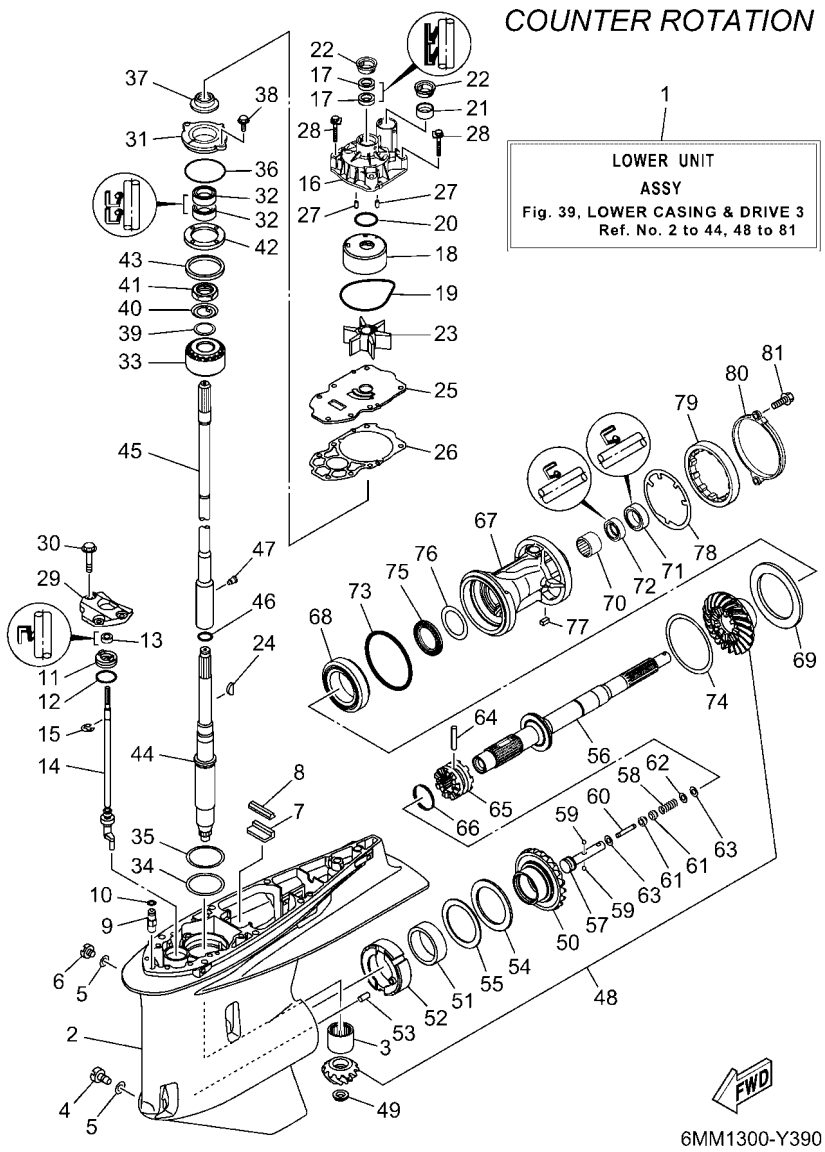

FIG. 39 LOWER CASING & DRIVE 3 — IMPULSOR E INFERIOR 3

REF. NO.	PART NO. CODIGO Nº	DESCRIPTION DESCRIPCION	6ML1	6MM1				REMARKS OBSERVACIONES
46	93210–22MF1	O-RING ANILLO O		1				
47	90149–05048	SCREW TORNILLO DE REGLAJE		1				
48	6KB–45550–00	GEAR SET JUEGO DE ENGRANAJE		1				
49	90179–16017	NUT TUERCA		1				
50	6KB–45560–00	GEAR 1 (21T) ENGRANAJE 1 (21T)		1				
51	93311–85894	BEARING COJINETE DE RODILLOS		1				
52	6CB–45824–00	ADAPTER ADAPTADOR		1				
53	93608–16M16	PIN, DOWEL PASADOR DE CLAVIJA		1				
54	93340–67011	BEARING COJINETES CON RODAMIENTOS		1				
55	6CB–45567–00	SHIM (T:2.00MM) LAINA (T:2.00MM)		1				UR UR
	6CB–45567–10	SHIM (T:2.03MM) LAINA (T:2.03MM)		1				UR UR
	6CB–45567–20	SHIM (T:2.06MM) LAINA (T:2.06MM)		1				UR UR
	6CB–45567–30	SHIM (T:2.09MM) LAINA (T:2.09MM)		1				UR UR
	6CB–45567–40	SHIM (T:2.12MM) LAINA (T:2.12MM)		1				UR UR
	6CB–45567–50	SHIM (T:2.15MM) LAINA (T:2.15MM)		1				UR UR
56	6KB–45611–00	SHAFT, PROPELLER EJE PROPUSOR		1				
57	6CB–45634–00	SLIDE, SHIFT DESLIZADOR, CAMBIO		1				
58	90501–10M77	SPRING, COMPRESSION RESORTE DE COMPRESION		1				
59	93501–04011	BALL BOLA		2				
60	6H1–45668–00	SHAFT, FREE 1 EJE 1		1				
61	61A–45635–00	PLUNGER, SHIFT EMBOLO DE CAMBIO		2				
62	90201–02M00	WASHER, PLATE ARANDELA PLANA		1				
63	90183–02M03	NUT, SPRING TUERCA DE RESORTE		2				
64	90250–08M07	PIN, STRAIGHT PASADOR CILINDRICO		1				
65	6ML–45631–00	CLUTCH, DOG EMBRAGUE DE GARRA		1				
66	6E5–45633–01	RING, CROSS PIN ANILLO DE PASADOR		1				
67	6CF–45332–01–CA	HOUSING, BEARING CAJA BALERO 2		1				

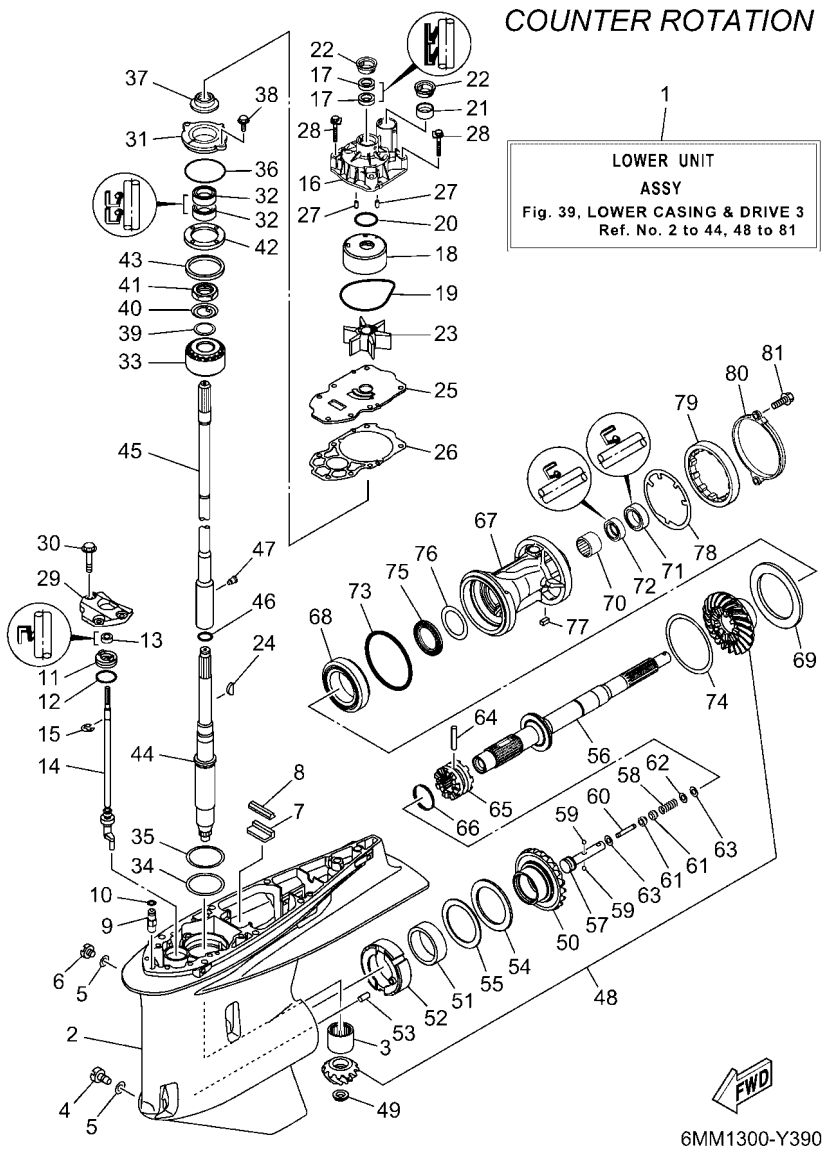

FIG. 39 LOWER CASING & DRIVE 3 — IMPULSOR E INFERIOR 3

REF. NO.	PART NO. CODIGO Nº	DESCRIPTION DESCRIPCION	6ML1	6MM1				REMARKS OBSERVACIONES
68	93332–00048	BEARING COJINETE		1				
69	6CF–45576–00	WASHER, THRUST 2 ARANDELA DE EMPUJE AXIAL 2		1				
70	93315–43061	BEARING COJINETE DE RODILLOS		1				
71	93101–30030	OIL SEAL SELLO ACEITE		1				
72	93101–30019	OIL SEAL SELLO ACEITE		1				
73	93211–02001	O-RING ANILLO O		1				
74	6CB–45577–00	SHIM (T:0.10MM) LAINA (T:0.10MM)		1				UR UR
	6CB–45577–10	SHIM (T:0.12MM) LAINA (T:0.12MM)		1				UR UR
	6CB–45577–20	SHIM (T:0.15MM) LAINA (T:0.15MM)		1				UR UR
	6CB–45577–30	SHIM (T:0.18MM) LAINA (T:0.18MM)		1				UR UR
	6CB–45577–40	SHIM (T:0.30MM) LAINA (T:0.30MM)		1				UR UR
	6CB–45577–50	SHIM (T:0.40MM) LAINA (T:0.40MM)		1				UR UR
	6CB–45577–60	SHIM (T:0.50MM) LAINA (T:0.50MM)		1				UR UR
75	93341–440U5	BEARING COJINETES CON RODAMIENTOS		1				
76	6K1–45578–01	SHIM (T:0.10MM) LAINA (T:0.10MM)		1				UR UR
	6K1–45578–10	SHIM (T:0.12MM) LAINA (:0.12MM)		1				UR UR
	6K1–45578–20	SHIM (T:0.15MM) LAINA (T:0.15MM)		1				UR UR
	6K1–45578–30	SHIM (T:0.18MM) LAINA (T:0.18MM)		1				UR UR
	6K1–45578–40	SHIM (T:0.30MM) LAINA (T:0.30MM)		1				UR UR
	6K1–45578–50	SHIM (T:0.40MM) LAINA (T:0.40MM)		1				UR UR
	6K1–45578–60	SHIM (T:0.50MM) LAINA (T:0.50MM)		1				UR UR
77	90282–05008	KEY, STRAIGHT CHAVETA, RECTA		1				
78	6CB–45383–00	WASHER, CLAW ARANDELA DE UNA		1				
79	6CB–45384–00	NUT TUERCA		1				
80	6CE–45361–10	CAP, LOWER CASING FUNDA INFERIOR		1				
81	90105–08M61	BOLT, FLANGE TORNILLO		2				

FIG. 40 LOWER CASING & DRIVE 4 — IMPULSOR E INFERIOR 4

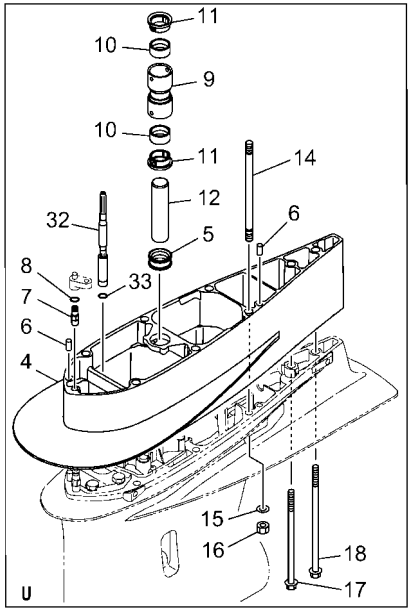

COUNTER ROTATION

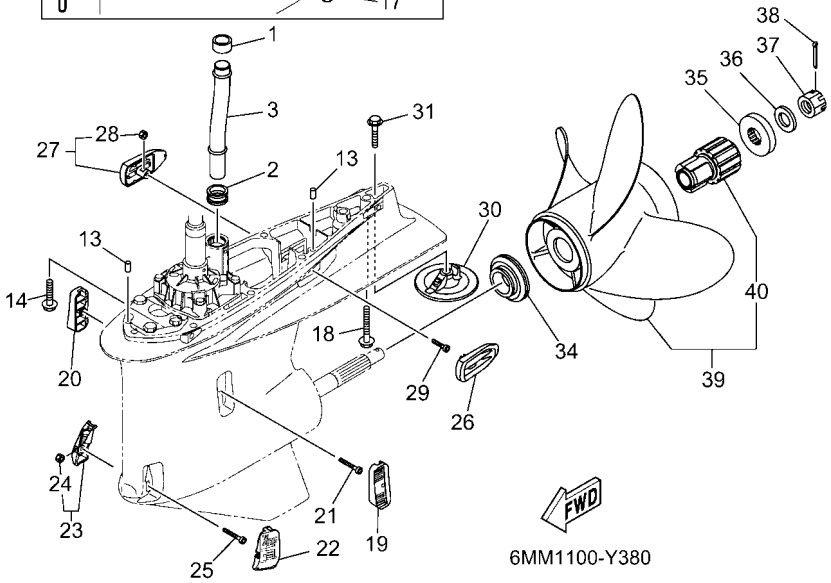

6MM1100-Y380

REF. NO.	PART NO. CODIGO Nº	DESCRIPTION DESCRIPCION	6ML1	6MM1				REMARKS OBSERVACIONES
1	6AW–44365–01	DAMPER, WATER SEAL 1 HULE DE SELLO DE AGUA 1		1				
2	6AW–44366–01	DAMPER, WATER SEAL 2 GOMA DEL SELLO DE AGUA 2		1				
3	6CE–44361–00	TUBE, WATER 1 TUBO DE AGUA 1		1				
4	6KA–45211–00–8D	EXTENSION EXTENSION		1				GRAY, U(30.2") GRAY, U(30.2")
	6KA–45211–00–CE	EXTENSION EXTENSION		1				WHITE, U(30.2") WHITE, U(30.2")
5	6AW–44366–01	DAMPER, WATER SEAL 2 GOMA DEL SELLO DE AGUA 2		1				U(30.2") U(30.2")
6	93608–16M16	PIN, DOWEL PASADOR DE CLAVIJA		2				U(30.2") U(30.2")
7	63P–45378–00	NIPPLE, HOSE NIPLE MANGUERA		1				U(30.2") U(30.2")
8	93210–07003	O-RING ANILLO O		1				U(30.2") U(30.2")
9	6CE–44362–00	TUBE, WATER 2 TUBO DE AGUA 2		1				U(30.2") U(30.2")
10	6AW–44365–01	DAMPER, WATER SEAL 1 HULE DE SELLO DE AGUA 1		2				U(30.2") U(30.2")
11	6AW–44312–00	COVER, WATER PUMP HOUSING CUBIERTA CAJA BOMBA DE AGUA		2				U(30.2") U(30.2")
12	6AW–44363–00	TUBE, WATER 3 TUBO DE AGUA 3		1				U(30.2") U(30.2")
13	93608–16M16	PIN, DOWEL PASADOR DE CLAVIJA		2				
14	90119–10024	BOLT, WITH WASHER TORNILLO CON ARANDELA		7				UR X(25.2") UR X(25.2")
	90116–10067	BOLT, STUD ESPARRAGO		6				UR U(30.2") UR U(30.2")
15	92995–10600	WASHER ARANDELA		6				U(30.2") U(30.2")
16	95380–10600	NUT TUERCA		6				U(30.2") U(30.2")
17	90119–10009	BOLT, WITH WASHER TORNILLO CON ARANDELA		1				U(30.2") U(30.2")
18	97E75–10570	BOLT, HEXAGON W/W DEEP RECESS TORNILLO HEXAGONAL CON RONDONA		1				UR X(25.2") UR X(25.2")
	90119–10008	BOLT, WITH WASHER TORNILLO CON ARANDELA		1				UR U(30.2") UR U(30.2")
19	6KA–45214–00	COVER, WATER INLET 1 CUBIERTA, ENTRADA AGUA 1		1				
20	6KA–45215–00	COVER, WATER INLET 2 CUBIERTA, ENTRADA AGUA 2		1				
21	90110–05039	BOLT, HEXAGON SOCKET HEAD TORNILLO ALLEN		1				
22	6CE–45224–00	COVER, WATER INLET 3 CUBIERTA, ENTRADA AGUA 3		1				
23	6CE–45225–00	COVER, WATER INLET 4 CUBIERTA, ENTRADA AGUA 4		1				
24	90185–05002	.NUT, NYLON .TUERCA AUTOBLOCANTE		1				

FIG. 40 LOWER CASING & DRIVE 4 — IMPULSOR E INFERIOR 4

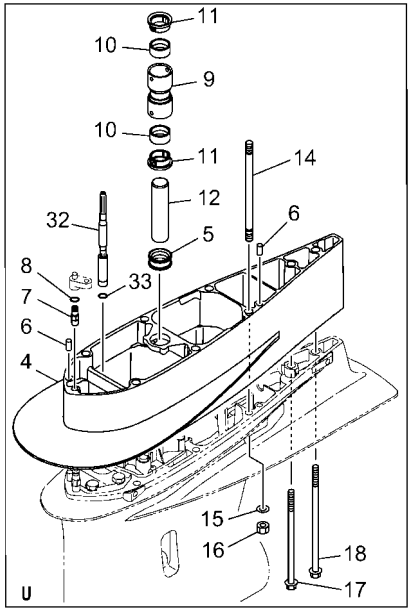

COUNTER ROTATION

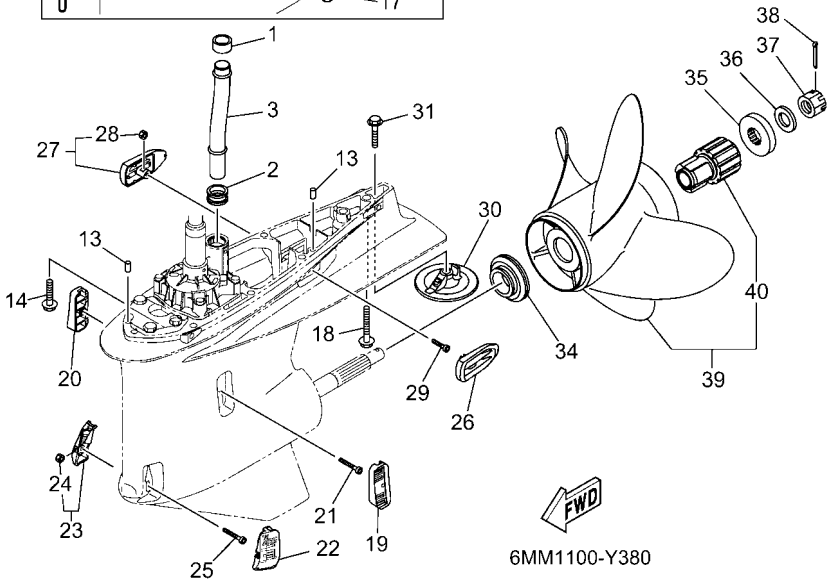

6MM1100-Y380

REF. NO.	PART NO. CODIGO Nº	DESCRIPTION DESCRIPCION	6ML1	6MM1				REMARKS OBSERVACIONES
25	90110–05039	BOLT, HEXAGON SOCKET HEAD TORNILLO ALLEN		1				
26	6KA–45254–00	COVER, OUTLET 1 CUBIERTA, SALIDA 1		1				
27	6KA–45255–00	COVER, OUTLET 2 CUBIERTA, SALIDA 2		1				
28	90185–05002	.NUT, NYLON .TUERCA AUTOBLOCANTE		1				
29	91380–05020	BOLT PERNO		1				
30	6CE–45373–00	ANODE ANODO		1				
31	90105–10M00	BOLT, FLANGE TORNILLO		1				
32	6KA–44190–00	JT. SHIFT ROD COMP. JUNTA VARILLA EJE COMPL.		1				U(30.2") U(30.2")
33	93210–09165	O-RING ANILLO O		1				U(30.2") U(30.2")
34	69J–45987–00	SPACER 1 ESPACIADOR 1		1				
35	688–45997–01	SPACER 2 ESPACIADOR 2		1				
36	92990–18200	WASHER ARANDELA PLANA		1				
37	90171–18M04	NUT, CASTLE TUERCA ENTALLADA		1				
38	91490–40030	PIN. COTTER CHAVETA		1				
39	6MM–45B76–00	PROPELLER (4X15"X20"-TL) PROPELA (4X15"X20"-TL)		1				UR UR
	6MM–45B78–00	PROPELLER (4X15"X21"-TL) PROPELA (4X15"X21"-TL)		1				UR UR
	6MM–45B80–00	PROPELLER (4X15"X22"-TL) PROPELA (4X15"X22"-TL)		1				UR UR
	6MM–45B82–00	PROPELLER (4X15"X23"-TL) PROPELA (4X15"X23"-TL)		1				UR UR
	6MM–45B84–00	PROPELLER (4X15"X24"-TL) PROPELA (4X15"X24"-TL)		1				UR UR
	6MM–45B86–00	PROPELLER (4X15"X25"-TL) PROPELA (4X15"X25"-TL)		1				UR UR
40	6CE–45C81–10	.DAMPER RUBBER, PROPELLER 1 .AMORTIGUADOR PROPELA 1		1				

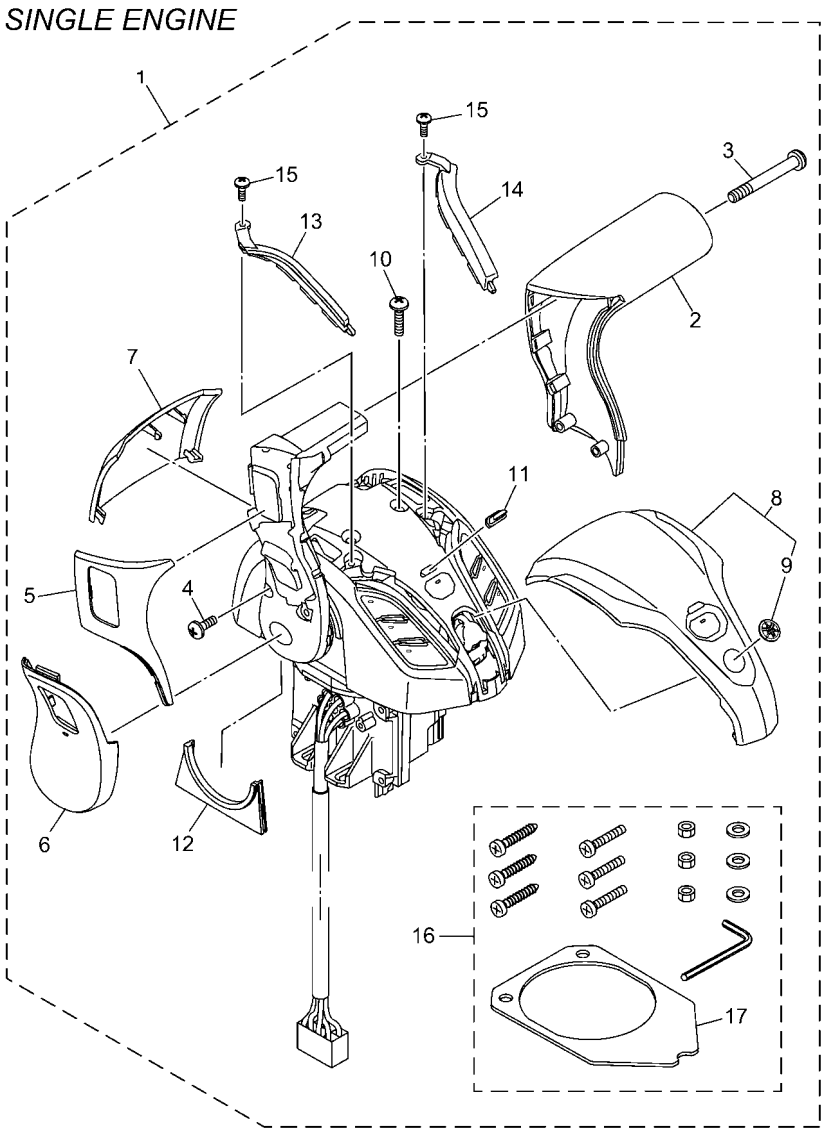

6X91100-X010

FIG. 41 DEC 1 (SINGLE) DEC 1 (UNICO)

REF. NO.	PART NO. CODIGO Nº	DESCRIPTION DESCRIPCION	6ML1	6MM1				REMARKS OBSERVACIONES
1	6X9–48A01–10	REMOTE CONTROL BOX ASSY 2 CONJ, DE CAJA CONTROL REMOTO 2	1					CAR (ASK TO MARINE DIV CAR (ASK TO MARINE DIV
2	6X9–4822A–10	.GRIP, LEVER SINGL .MANGO DE PALANCA SOLTERO	1					
3	6X9–48127–20	.SCREW 1 .TORNILLO 1	1					
4	6X9–44189–20	.SCREW .TORNILLO	2					
5	6X9–48224–00	.COVER, CONTROL LEVER .CUBIERTA DE PALANCA CONTROL	1					
6	6X9–48225–00	.COVER .CUBIERTA	1					
7	6X9–4811C–10	.COVER, SINGLE .CUBIERTA DE SOLTERO	1					
8	6X9–48400–10	.COVER ASSY .CUBIERTA COMPL.	1					
9	6X9–42697–00	..TUNING FORK MARK ..MARCA, YAMAHA	1					
10	6X9–44189–00	.SCREW .TORNILLO	2					
11	6X9–83532–00	.LENS, PILOT .LENTE PILOTO	1					
12	6X9–48219–00	.COVER, LEAD .CUBIERTA	1					
13	6X9–84411–00	.LENS, ILLUMINATE 1 .LENTE, ILUMINAR 1	1					
14	6X9–84412–00	.LENS, ILLUMINATE 2 .LENTE, ILUMINAR 2	1					
15	6X9–44189–10	.SCREW .TORNILLO	2					
16	6X9–48901–10	.PARTS SET 1 .JUNTO DE REPUESTOS 1	1					
17	6X9–48176–10	..GROMMET ..TOPON	1					

FIG. 42 DEC 2 (SINGLE) DEC 2 (UNICO)

DIGITAL ELECTRONIC CONTROL
(SINGLE ENGINE / MAIN STATION)

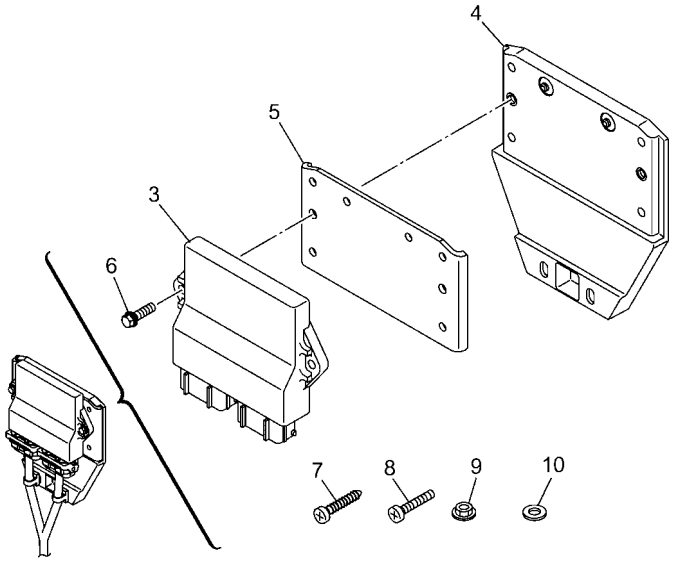

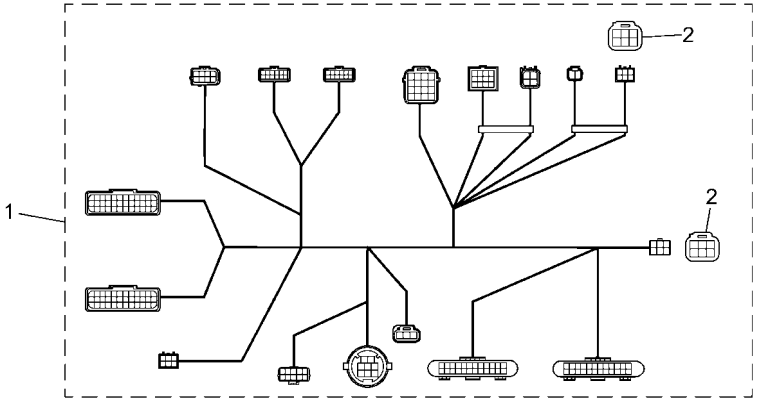

6ML1200-Y420

REF. NO.	PART NO. CODIGO Nº	DESCRIPTION DESCRIPCION	6ML1	6MM1				REMARKS OBSERVACIONES
1	6X9–82580–60	WIRE HARNESS ASSY 2 CONJUNTO DE CABLES 2	1					
2	6Y8–85371–01	.END OF LINE RESISTOR .RESISTENCIA DE FIN DE LINEA	2					
3	6X6–85590–51	CONTROL UNIT ASSY UNIDAD DE CONTROL COMPLETA	1					
4	6X9–48211–10	HOUSING,1 CAJA	1					
5	6X9–4821B–00	HOUSING,3 CAJA 3	1					
6	90105–06106	BOLT, FLANGE TORNILLO	2					
7	6X9–48128–00	SCREW 2 TORNILLO 2	5					
8	90157–06M13	SCREW, PAN HEAD TORNILLO CABEZA CONICA PLANA	5					
9	95780–06300	NUT, FLANGE TUERCA	5					
10	90201–065F1	WASHER, PLATE ARANDELA PLANA	5					

FIG. 43 DEC 3 (TWIN) DEC 3 (DOBLE)

TWIN ENGINE

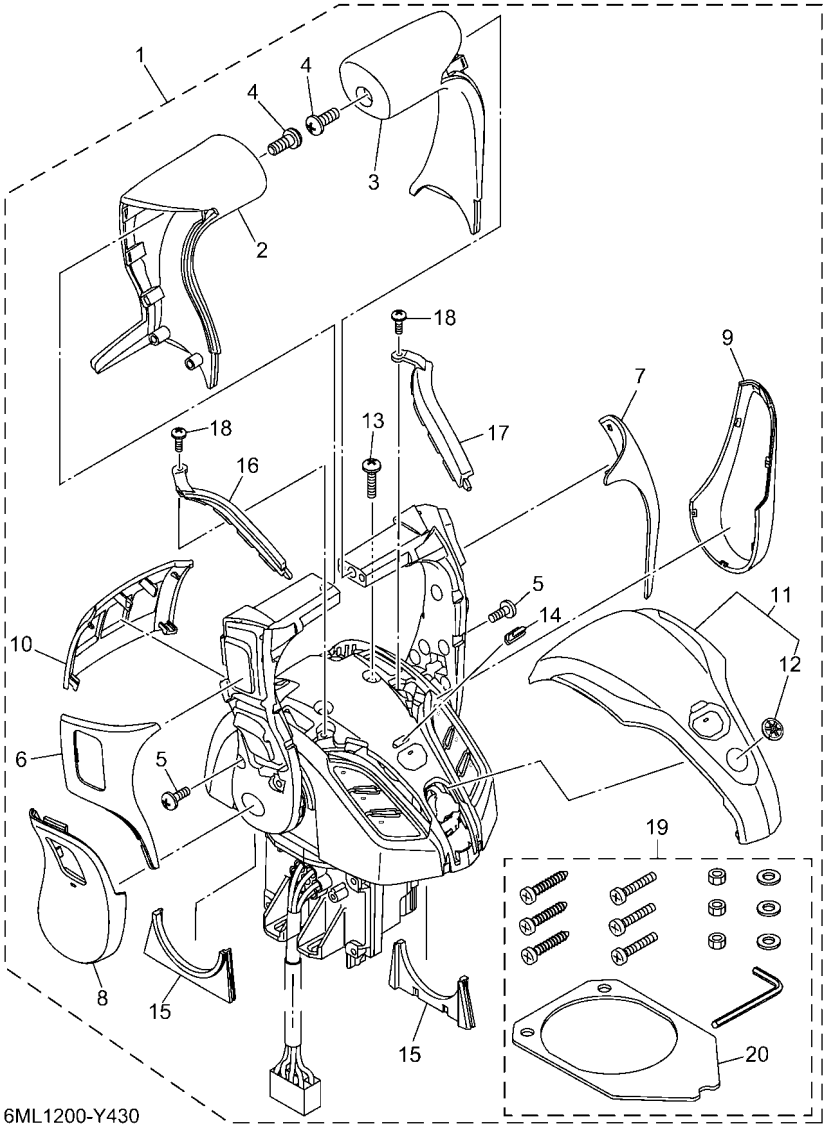

REF. NO.	PART NO. CODIGO Nº	DESCRIPTION DESCRIPCION	6ML1	6MM1				REMARKS OBSERVACIONES
1	6X9–48A02–10	REMOTE CONTROL BOX ASSY 3 CONJ, DE CAJA CONTROL REMOTO 3		1				CAR (ASK TO MARINE DIV CAR (ASK TO MARINE DIV
2	6X9–4822B–10	.GRIP, LEVER MULTI .MANGO DE PALANCA PLURAL		1				
3	6X9–48222–10	.GRIP, CONTROL LEVER .MANGO DE PALANCA CONTROL		1				
4	6X9–48127–10	.SCREW 1 .TORNILLO 1		2				
5	6X9–44189–20	.SCREW .TORNILLO		4				
6	6X9–48224–00	.COVER, CONTROL LEVER .CUBIERTA DE PALANCA CONTROL		1				
7	6X9–48224–10	.COVER, CONTROL LEVER .CUBIERTA DE PALANCA CONTROL		1				
8	6X9–48225–00	.COVER .CUBIERTA		1				
9	6X9–48225–10	.COVER .CUBIERTA		1				
10	6X9–48119–10	.COVER .CUBIERTA		1				
11	6X9–48400–10	.COVER ASSY .CUBIERTA COMPL.		1				
12	6X9–42697–00	..TUNING FORK MARK ..MARCA, YAMAHA		1				
13	6X9–44189–00	.SCREW .TORNILLO		2				
14	6X9–83532–00	.LENS, PILOT .LENTE PILOTO		1				
15	6X9–48219–00	.COVER, LEAD .CUBIERTA		2				
16	6X9–84411–00	.LENS, ILLUMINATE 1 .LENTE, ILUMINAR 1		1				
17	6X9–84412–00	.LENS, ILLUMINATE 2 .LENTE, ILUMINAR 2		1				
18	6X9–44189–10	.SCREW .TORNILLO		2				
19	6X9–48901–10	.PARTS SET 1 .JUNTO DE REPUESTOS 1		1				
20	6X9–48176–10	..GROMMET ..TOPON		1				

FIG. 44 DEC 4 (TWIN) DEC 4 (DOBLE)

DIGITAL ELECTRONIC CONTROL
(TWIN ENGINE / MAIN STATION)

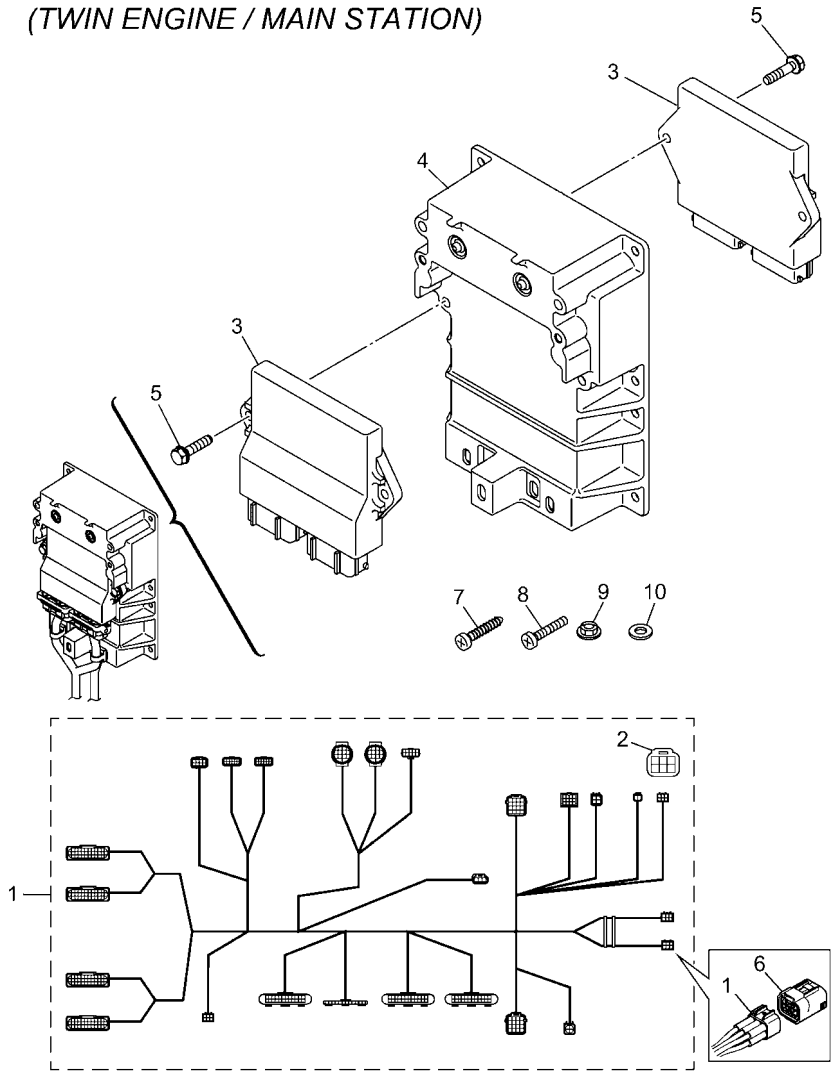

6ML1200-Y440

REF. NO.	PART NO. CODIGO Nº	DESCRIPTION DESCRIPCION	6ML1	6MM1				REMARKS OBSERVACIONES
1	6X9–82580–70	WIRE HARNESS ASSY 2 CONJUNTO DE CABLES 2		1				
2	6Y8–85371–01	.END OF LINE RESISTOR .RESISTENCIA DE FIN DE LINEA		1				
3	6X6–85590–51	CONTROL UNIT ASSY UNIDAD DE CONTROL COMPLETA		2				
4	6X9–4821A–10	HOUSING, 2 CAJA 2		1				
5	6X9–48171–00	BOLT TORNILLO		4				
6	6Y8–85371–01	END OF LINE RESISTOR RESISTENCIA DE FIN DE LINEA		1				
7	6X9–48128–00	SCREW 2 TORNILLO 2		8				
8	90157–06M13	SCREW, PAN HEAD TORNILLO CABEZA CONICA PLANA		8				
9	95780–06300	NUT, FLANGE TUERCA		8				
10	90201–065F1	WASHER, PLATE ARANDELA PLANA		8				

FIG. 45 OPTIONAL PARTS 1 — PARTES OPCIONALES 1

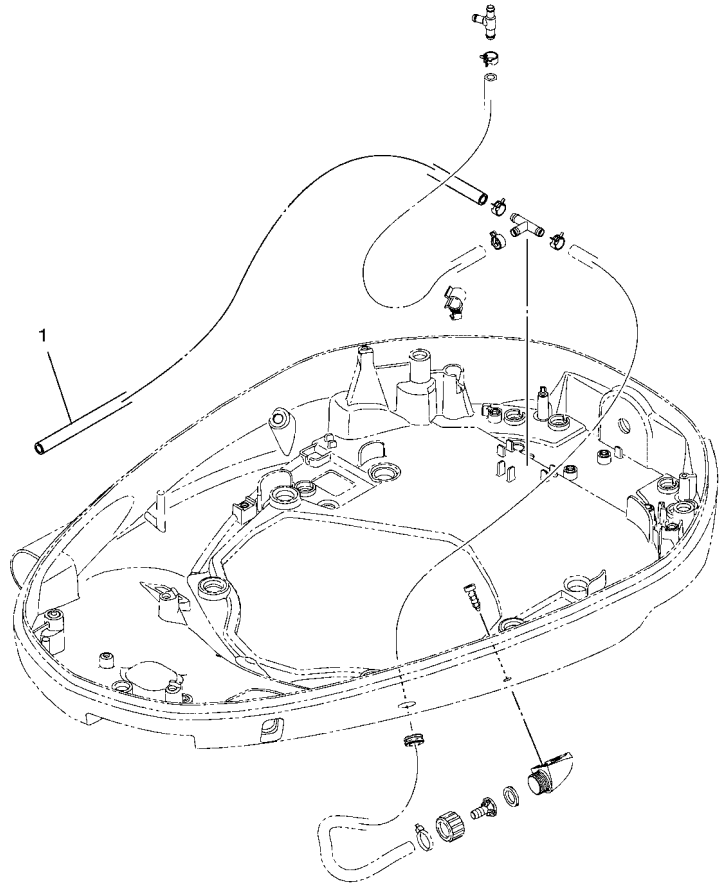

6KA1100-V410

REF. NO.	PART NO. CODIGO Nº	DESCRIPTION DESCRIPCION	6ML1	6MM1				REMARKS OBSERVACIONES
1	6KA–44385–00	HOSE, WATER 1 TUBO DE AGUA 1	1	1				

FIG. 46 OPTIONAL PARTS 2 — PARTES OPCIONALES 2

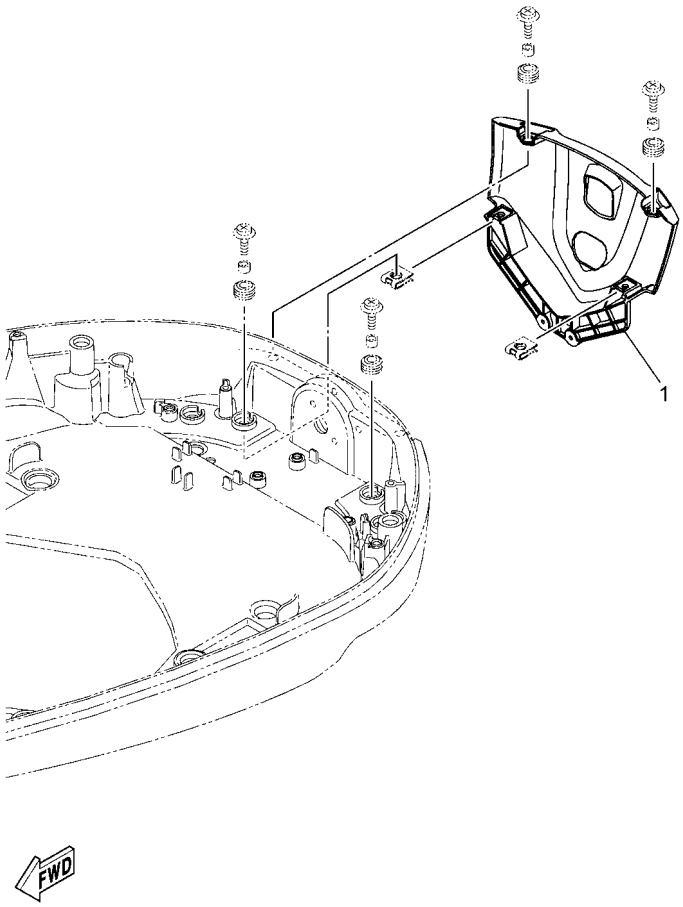

6ML1100-Y400

REF. NO.	PART NO. CODIGO Nº	DESCRIPTION DESCRIPCION	6ML1	6MM1				REMARKS OBSERVACIONES
1	6KA–42723–10–8D	COVER, BOTTOM CUBIERTA INFERIOR	1	1				GRAY GRAY
	6KA–42723–10–CE	COVER, BOTTOM CUBIERTA INFERIOR	1	1				WHITE WHITE

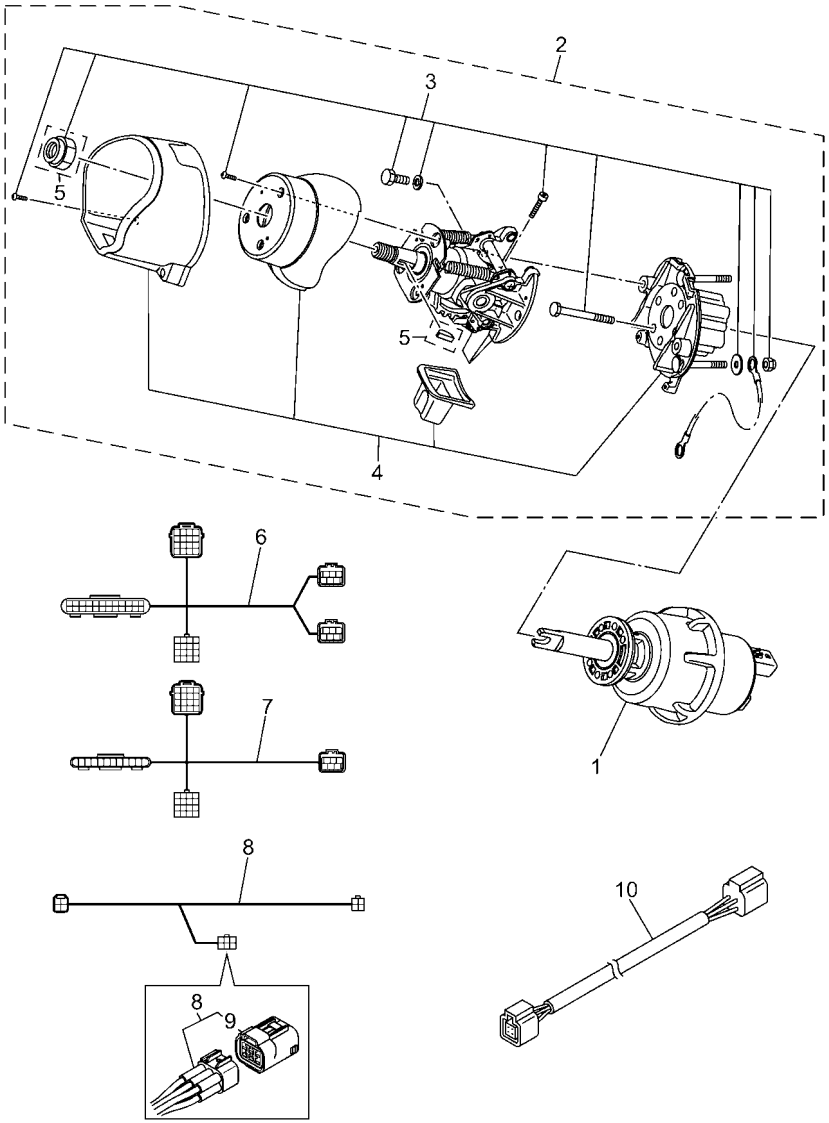

6KA3200-X470

FIG. 47 OPTIONAL PARTS 3 — PARTES OPCIONALES 3

REF. NO.	PART NO. CODIGO Nº	DESCRIPTION DESCRIPCION	6ML1	6MM1				REMARKS OBSERVACIONES
1	6GR–615A0–10	HELM UNIT ASSY ASAMBLEA DE UNIDAD DE DIRECCIO	1					CAR (ASK TO MARINE DIV CAR (ASK TO MARINE DIV
2	6GR–6154A–01	TILT HELM UNIT COLUMNA DE DIRECCION COMPLETA	1					CAR (ASK TO MARINE DIV CAR (ASK TO MARINE DIV
3	6GR–42402–01	.REPAIR KIT, 1 .KIT DE REPARACION 1	1					
4	6GR–42403–00	.REPAIR KIT, 2 .KIT DE REPARACION 2	1					
5	6X9–4240A–00	.REPAIR KIT, 9 .KIT DE REPARACION 9	1					
6	6GR–8258A–01	HELM HARNESS 0.9M-3FT EXTENSION, ARNES DE CABLES	1					CAR CAR
7	6GR–8258A–11	HELM HARNESS 0.9M-3FT EXTENSION, ARNES DE CABLES		2				CAR CAR
8	6GR–81115–10	SCU LINK HARNESS 3.0M-10F CONDUCTOR DE CABLE		2				CAR CAR
9	6Y8–85371–01	.END OF LINE RESISTOR .RESISTENCIA DE FIN DE LINEA		1				
10	6Y8–82521–11	2FT PIGTAIL BUS CABLE CONDUCTOR		1				CAR CAR

FIG. 48 OPTIONAL PARTS 4 — PARTES OPCIONALES 4

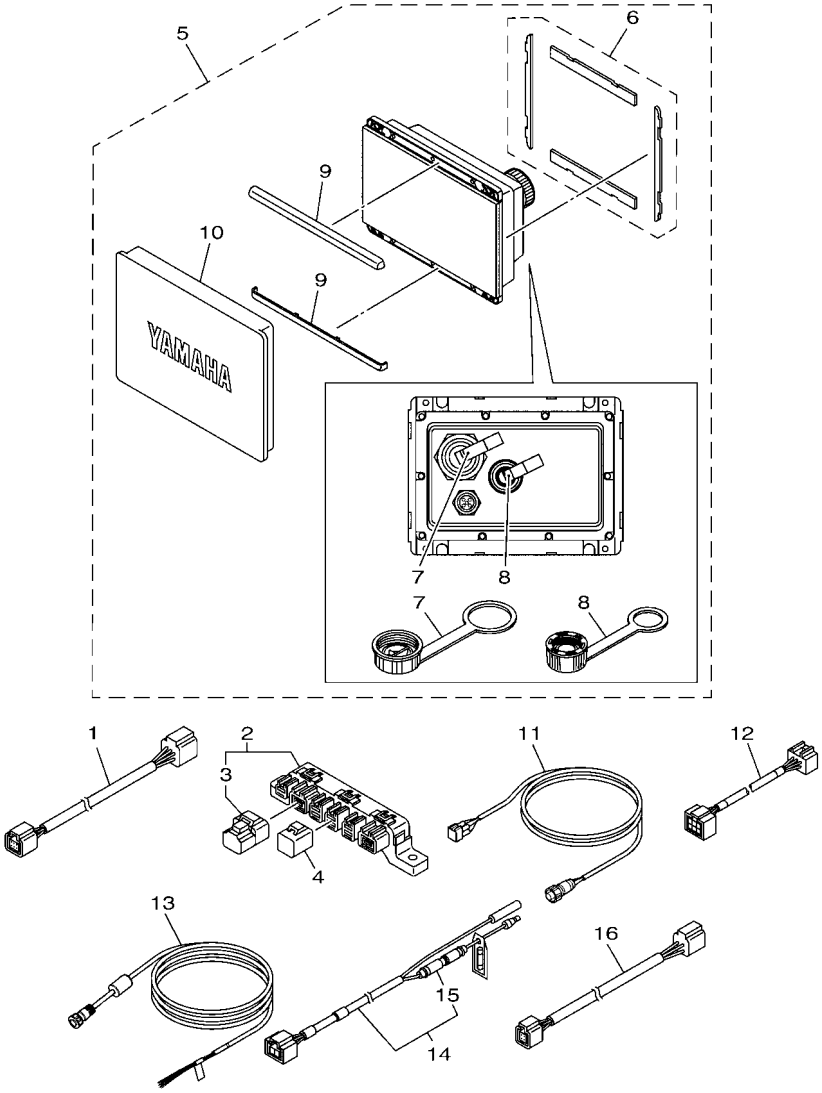

REF. NO.	PART NO. CODIGO Nº	DESCRIPTION DESCRIPCION	6ML1	6MM1				REMARKS OBSERVACIONES
1	6Y8–82553–01	1FT MAIN BUS CABLE	1					FOR CAR FOR CAR
2	6Y8–81920–01	MULTI HUB ASSY TERMINAL COMPLETO	1					FOR CAR FOR CAR
3	6Y8–85371–01	.END OF LINE RESISTOR .RESISTENCIA DE FIN DE LINEA	1					
4	6Y8–82582–11	CAP 1 (4PIN) TAPA 1 (4P)	2					FOR CAR FOR CAR
5	6YM–83710–17	CL5 DISPLAY CL5 PANTALLA	1					FOR CAR WITHOUT Wi-Fi FOR CAR WITHOUT Wi-Fi
6	6YM–22480–00	.SEAL ASSY .JUEGO DE JUNTO	1					
7	6YM–83956–00	.CAP 1 .TAPA 1	1					
8	6YD–83957–00	.CAP 2 .TAPA 2	1					
9	6YM–83512–00	.RIM .ANILLO	2					
10	6YM–87278–00	.COVER, METER .CUBIERTA DE MEDIDOR	1					
11	6YM–83553–00	CONVERSION HARNESS CABLE CONDUCTOR	1					FOR CAR FOR CAR
12	6Y9–83553–00	WIRE, LEAD CABLE CONDUCTOR	1					FOR CAR FOR CAR
13	6YD–8356N–00	WIRE, LEAD CABLE CONDUCTOR	1					FOR CAR FOR CAR
14	6Y8–83553–02	8FT POWER WIRE CABLE CONDUCTOR	1					FOR CAR FOR CAR
15	6G1–82151–01	.FUSE (10A) .FUSIBLE (10A)	1					
16	6Y8–82521–31	6FT PIGTAIL BUS CABLE CONDUCTOR	1					FOR CAR FOR CAR

FIG. 49 OPTIONAL PARTS 5 — PARTES OPCIONLES 5

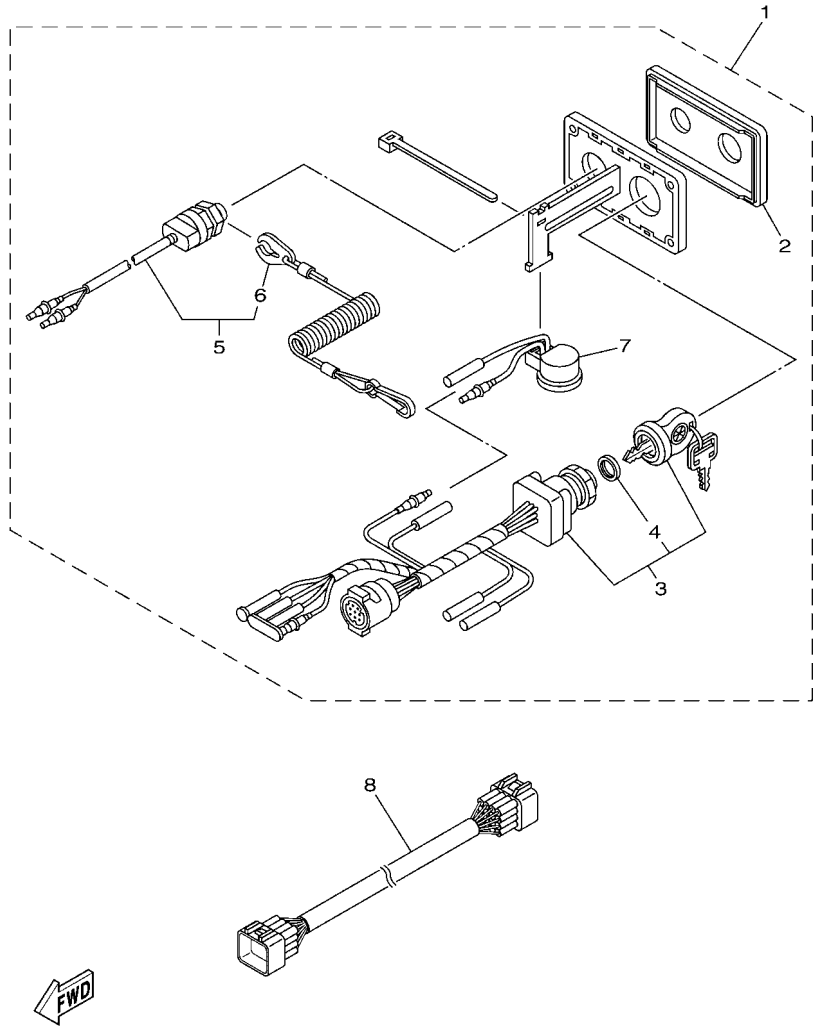

REF. NO.	PART NO. CODIGO Nº	DESCRIPTION DESCRIPCION	6ML1	6MM1				REMARKS OBSERVACIONES
1	6X6–82570–34	PANEL SWITCH ASSY INTERRUPTOR DE PANEL COMPL.	1					FOR CAR FOR CAR
2	6X6–82571–00	.PANEL, SWITCH .PANEL DE INTERRUPTOR	1					
3	6X6–82510–02	.MAIN SWITCH ASSY .CONJUNTO DE LLAVE IGNICION	1					
4	703–82532–00	..CAP ..TAPA	1					
5	688–82575–12	.ENGINE STOP SWITCH ASSY .INTERRUPTOR DE PARADA COMPL	1					
6	682–82556–00	..LANYARD, STOP SWITCH ..CORDON DE INTERRUPTOR PARADA	1					
7	703–83383–A0	.BUZZER .ZUMBADOR	1					
8	6X6–8258A–31	EXTENSION, WIRE HARNESS (10M) EXTENSION, CABLES (10M)	1					FOR CAR FOR CAR

FIG. 50 OPTIONAL PARTS 6 — PARTES OPCIONALES 6

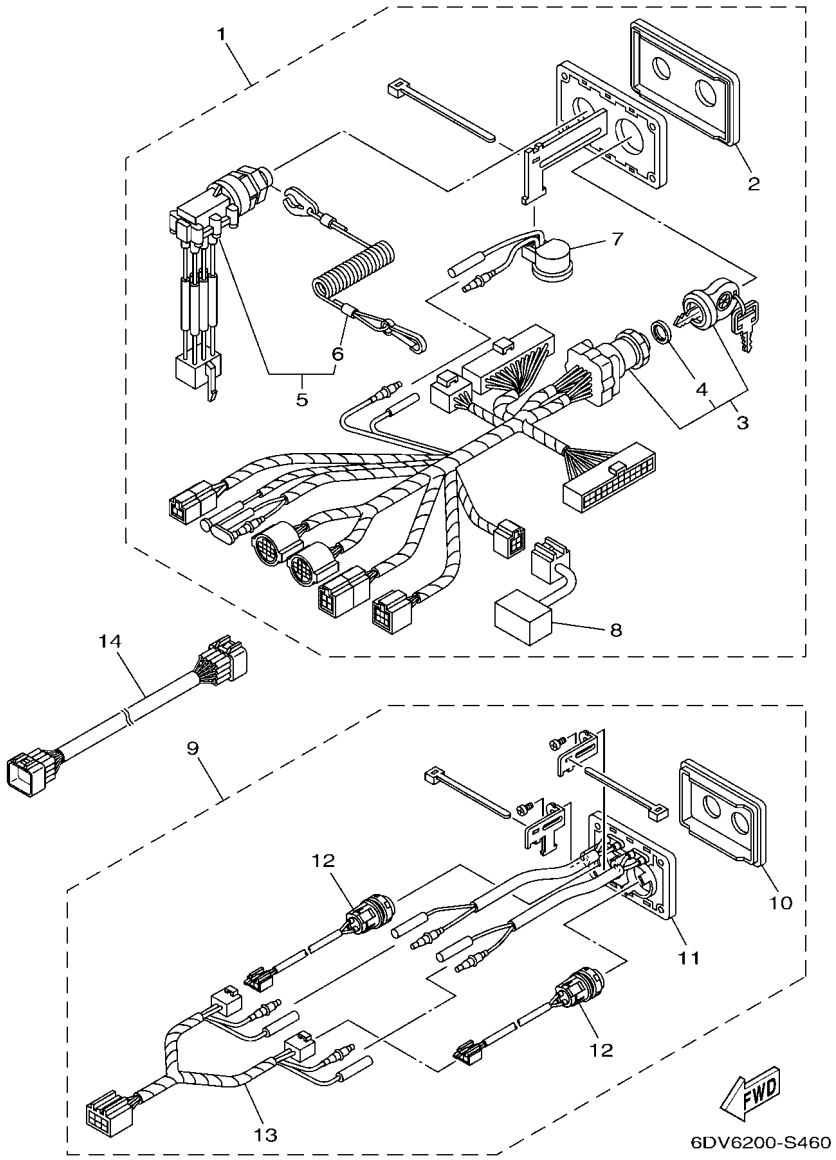

REF. NO.	PART NO. CODIGO Nº	DESCRIPTION DESCRIPCION	6ML1	6MM1				REMARKS OBSERVACIONES
1	6X6–82570–41	PANEL SWITCH ASSY INTERRUPTOR DE PANEL COMPL.		1				FOR CAR FOR CAR
2	6X6–82571–10	.PANEL, SWITCH .PANEL DE INTERRUPTOR		1				
3	6X6–82510–11	.MAIN SWITCH ASSY .CONJUNTO DE LLAVE IGNICION		1				
4	703–82532–00	..CAP ..TAPA		1				
5	6X6–82575–10	.ENGINE STOP SWITCH ASSY .INTERRUPTOR DE PARADA COMPL		1				
6	682–82556–00	..LANYARD, STOP SWITCH ..CORDON DE INTERRUPTOR PARADA		1				
7	703–83383–A0	.BUZZER .ZUMBADOR		1				
8	6X6–81980–00	.DIODE ASSY .CONJUNTO DIODO		1				
9	6X6–82570–60	PANEL SWITCH ASSY INTERRUPTOR DE PANEL COMPL.		1				FOR CAR FOR CAR
10	6X6–82571–20	.PANEL, SWITCH .PANEL DE INTERRUPTOR		1				
11	6X6–83720–00	.L.E.D ASS'Y .L.E.D COMPLETO		1				
12	6X6–8259E–20	.SWITCH ASSY .INTERRUPTOR COMPL		2				
13	6X6–82716–00	.CORD SWITCH .CABLE INTERRUPTOR		1				
14	6X6–8258A–41	EXTENSION, WIRE HARNESS (12M) EXTENSION, CABLES (12M)		1				FOR CAR FOR CAR

FIG. 51 OPTIONAL PARTS 7 — PARTES OPCIONALES 7

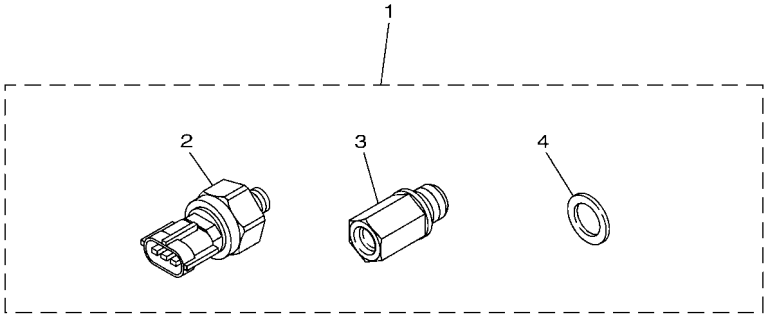

6KF1200-V490

REF. NO.	PART NO. CODIGO Nº	DESCRIPTION DESCRIPCION	6ML1	6MM1				REMARKS OBSERVACIONES
1	63P–8A4L0–07	SENSOR, MODULE SENSOR COMP.	1	1				FOR CAR FOR CAR
2	6AW–8366B–10	.SENSOR, WATER PRESSURE .SENSOR DE PRESION AGUA	1	1				
3	63P–8366C–00	.ADAPTOR, INPUT .CONECTOR BANJO 2	1	1				
4	90430–14115	.GASKET .JUNTA	1	1				

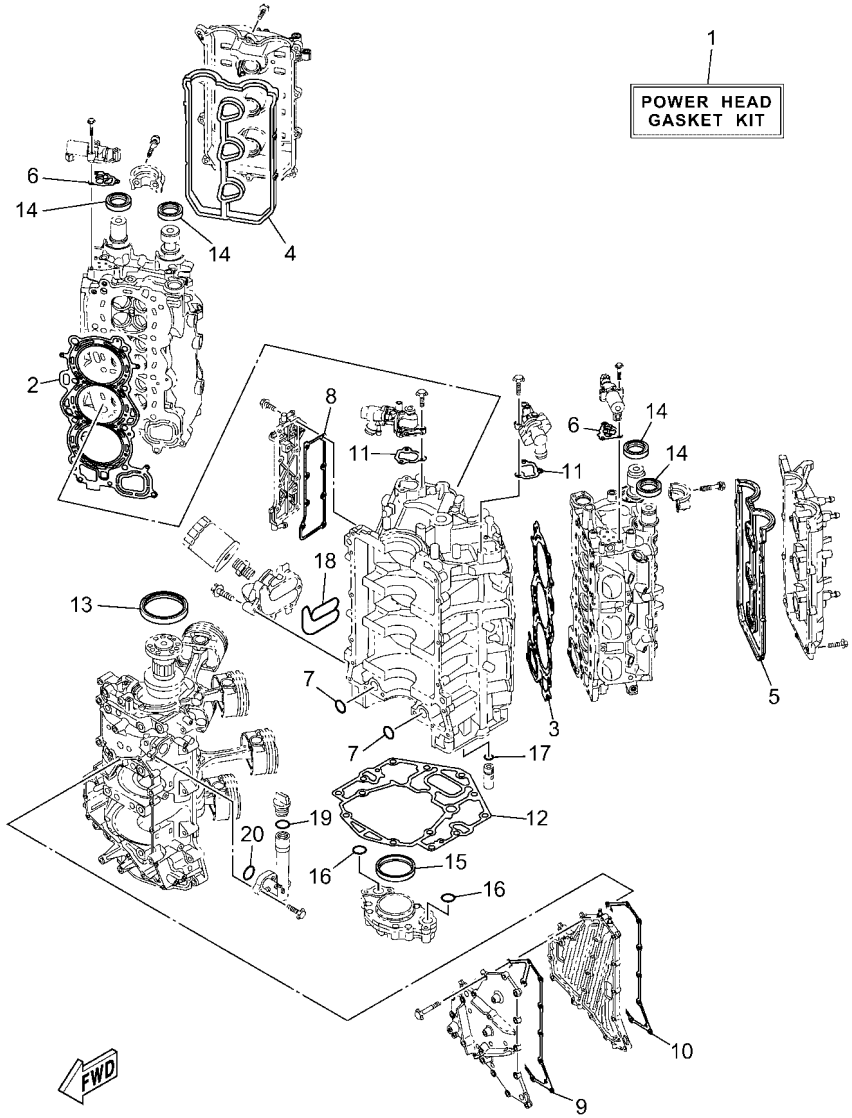

6ML1100-Y450

FIG. 52 REPAIR KIT 1 — ESTUCHE REPARATION 1

REF. NO.	PART NO. CODIGO Nº	DESCRIPTION DESCRIPCION	6ML1	6MM1				REMARKS OBSERVACIONES
1	6ML–W0001–00	POWER HEAD GASKET KIT JUEGO DE EMPAQUE DE MOTOR	1	1				
2	6ML–11181–00	.GASKET, CYLINDER HEAD 1 .JUNTA, DE CULATA 1	1	1				
3	6ML–11182–00	.GASKET, CYLINDER HEAD 2 .EMPAQUE CULATA DE CILINDRO 2	1	1				
4	6CB–11193–00	.GASKET, HEAD COVER 1 .EMPAQUE	1	1				
5	6CB–11194–00	.GASKET, HEAD COVER 2 .EMPAQUE DE TAPA DE CULATA 2	1	1				
6	6CB–1242F–00	.GASKET, FILTER .EMPAQUE DE FILTRO	2	2				
7	93210–26658	.O-RING .ANILLO O	2	2				
8	6ML–1131B–00	.GASKET, COVER .EMPAQUE DE CUBIERTA	1	1				
9	6ML–15451–00	.GASKET, CRANKCASE COVER 1 .EMPAQ DE CUBIERTA DE CARTER	1	1				
10	6ML–15461–00	.GASKET, CRANKCASE COVER 2 .JUNTA TAPA CARTER DERECHO 2	1	1				
11	6CB–12427–11	.GASKET, HOUSING COVER 1 .EMPAQUE DE TAPA	2	2				
12	6KA–11351–00	.GASKET, CYLINDER .JUNTA, DE CILINDRO	1	1				
13	93102–85008	.OIL SEAL .SELLO ACEITE	1	1				
14	93102–38008	.OIL SEAL .SELLO ACEITE	4	4				
15	6CB–11355–00	.SEAL, CYLINDER 1 .RETEN ACEITE CILINDRO 1	1	1				
16	93210–26658	.O-RING .ANILLO O	2	2				
17	6CB–13473–00	.O-RING .ANILLO O	1	1				
18	6CB–13477–00	.GASKET .EMPAQUE	1	1				
19	93210–24M79	.O-RING .ANILLO O	1	1				
20	93210–27370	.O-RING .ANILLO O	1	1				

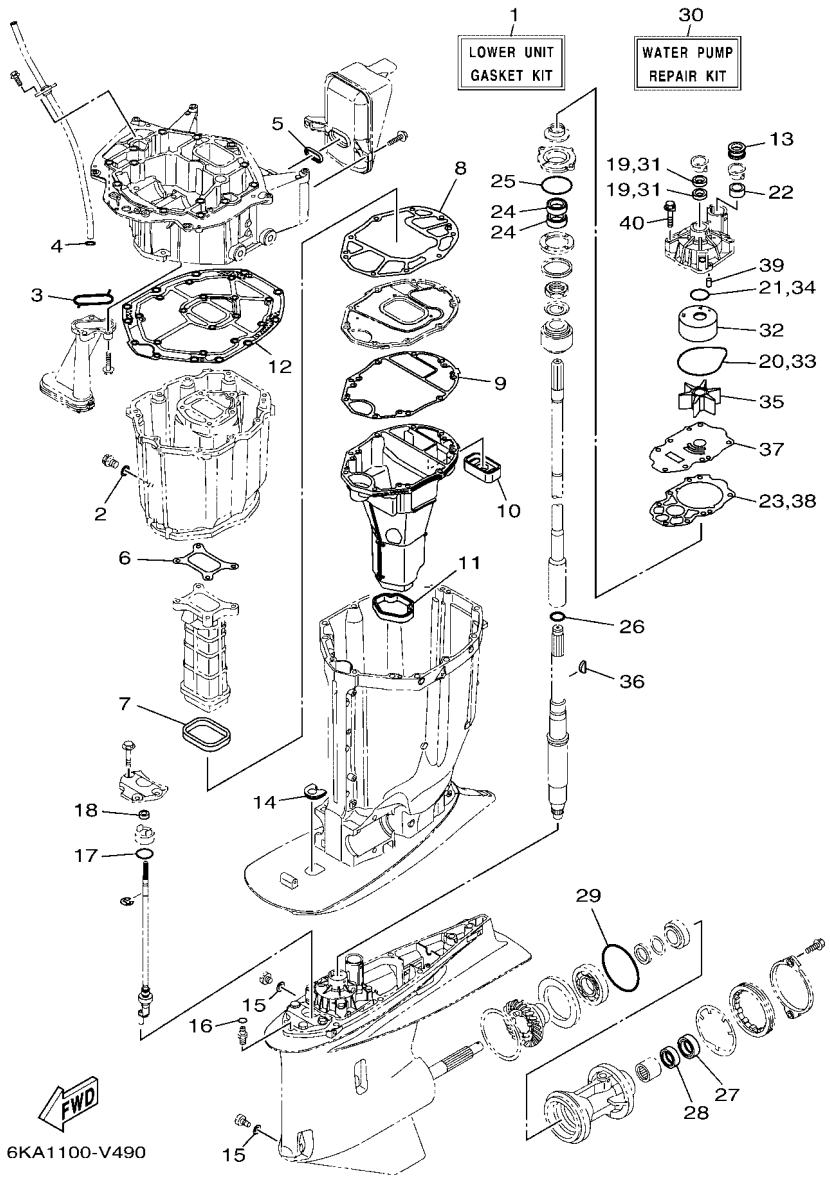

FIG. 53 REPAIR KIT 2 — ESTUCHE REPARATION 2

REF. NO.	PART NO. CODIGO Nº	DESCRIPTION DESCRIPCION	6ML1	6MM1				REMARKS OBSERVACIONES
1	6KA–W0001–20	LOWER UNIT GASKET KIT JUEGO DE EMPAQUE UNIDAD INFER.	1	1				
2	90430–14M09	.GASKET .JUNTA	1	1				
3	6AW–13415–00	.SEAL, OIL STRAINER .SELLO COLADOR ACEITE	1	1				
4	93210–19MJ3	.O-RING .ANILLO O	1	1				
5	6CB–14755–01	.GASKET, SILENCER .EMPAQUE DE SILENCIADOR	1	1				
6	6CB–41134–00	.GASKET, EXHAUST MANIFOLD .EMPAQUE	1	1				
7	6CB–41138–00	.SEAL, EXT. 1 .SELLO, ESCAPE 1	1	1				
8	6CB–41135–00	.GASKET, EXHAUST MANIFOLD .EMPAQUE	1	1				
9	6CE–41136–00	.GASKET, EXHAUST MANIFOLD 4 .EMPAQUE	1	1				
10	6CE–45127–00	.SEAL .SELLO DE GOMA	1	1				
11	6CE–45123–00	.GASKET, MUFFLER .EMPAQUE SILENCIADOR	1	1				
12	6CB–45113–10	.GASKET, UPPER CASING .EMPAQUE	1	1				
13	6AW–44366–01	.DAMPER, WATER SEAL 2 .GOMA DEL SELLO DE AGUA 2	1	1				
14	6KA–44521–00	.SEAL .SELLO DE GOMA	1	1				
15	90430–08003	.GASKET .JUNTA	2	2				
16	93210–07003	.O-RING .ANILLO O	1	1				
17	93210–33M49	.O-RING .ANILLO O	1	1				
18	93106–10001	.OIL SEAL .SELLO ACEITE	1	1				
19	93104–22M07	.OIL SEAL .SELLO ACEITE	2	2				
20	93210–94003	.O-RING .ANILLO O	1	1				
21	93210–37160	.O-RING .ANILLO O	1	1				
22	6AW–44365–01	.DAMPER, WATER SEAL 1 .HULE DE SELLO DE AGUA 1	1	1				
23	6CE–44315–00	.GASKET, WATER PUMP .EMPAQUE	1	1				
24	93101–28019	.OIL SEAL .SELLO ACEITE	2	2				
25	93210–69MG6	.O-RING .ANILLO O	1	1				
26	93210–22MF1	.O-RING .ANILLO O	1	1				
27	93101–30030	.OIL SEAL .SELLO ACEITE	1	1				

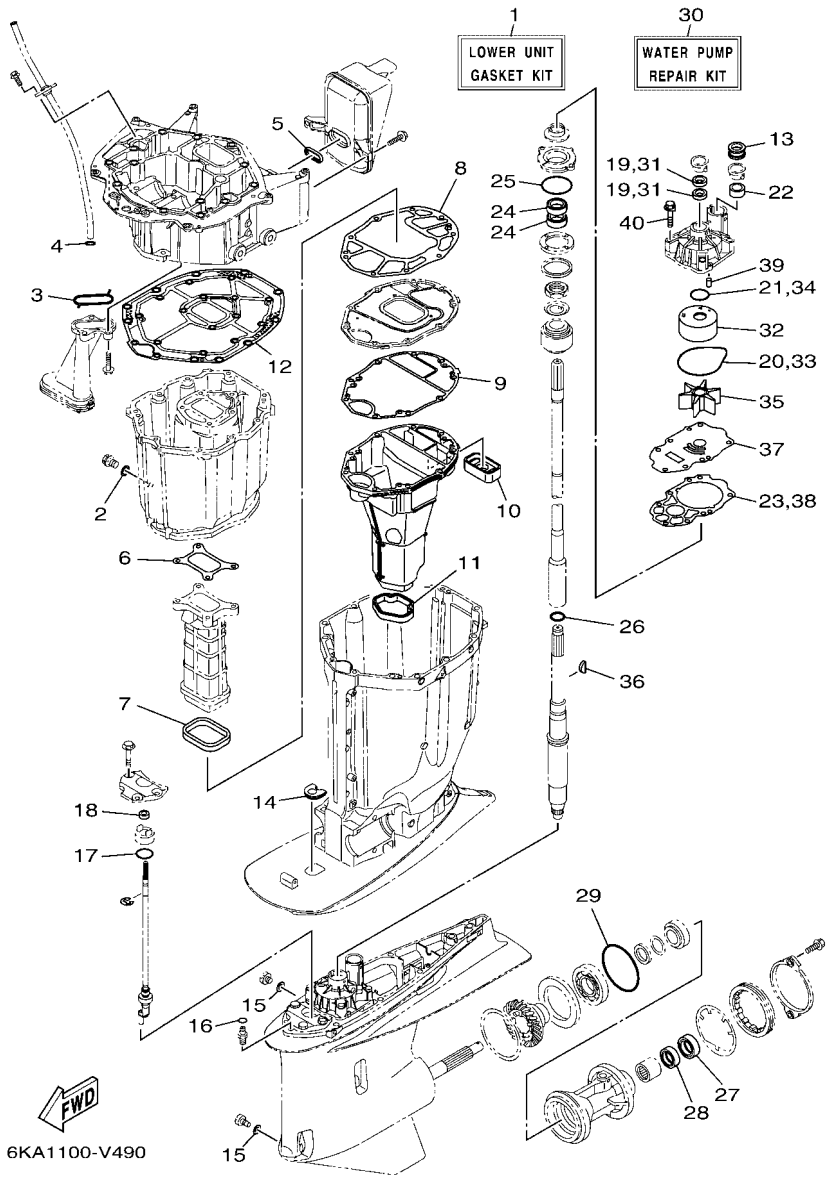

FIG. 53 REPAIR KIT 2 — ESTUCHE REPARATION 2

REF. NO.	PART NO. CODIGO Nº	DESCRIPTION DESCRIPCION	6ML1	6MM1				REMARKS OBSERVACIONES
28	93101–30019	.OIL SEAL .SELLO ACEITE	1	1				
29	93211–02001	.O-RING .ANILLO O	1	1				
30	6CE–W0078–02	WATER PUMP REPAIR KIT ESTUCHE REPARACION BOMBA AGUA	1	1				
31	93104–22M07	.OIL SEAL .SELLO ACEITE	2	2				
32	6AW–44322–00	.INSERT, CARTRIDGE .CARTUCHO	1	1				
33	93210–94003	.O-RING .ANILLO O	1	1				
34	93210–37160	.O-RING .ANILLO O	1	1				
35	6CE–44352–00	.IMPELLER .IMPULSOR	1	1				
36	90280–04002	.KEY, WOODRUFF .CUNA WOODRUFF	1	1				
37	6CE–44323–01	.OUTER PLATE, CARTRIDGE .PLACA EXTERIOR DEL CARTUCHO	1	1				
38	6CE–44315–00	.GASKET, WATER PUMP .EMPAQUE	1	1				
39	93606–12019	.PIN, DOWEL .PASADOR DE CLAVIJA	2	2				
40	90119–08191	.BOLT, WITH WASHER .TORNILLO CON ARANDELA	4	4				

NUMERICAL INDEX
INDICE NUMERICO

PART NO. CODIGO Nº	REF. NO.
6ML–11000–00	3 – 1
6ML–11110–00–9S	5 – 2
6ML–11120–00–9S	5 – 12
6S5–11133–10	5 – 3
	5 – 13
6ML–11181–00	5 – 25
	52 – 2
6ML–11182–00	5 – 30
	52 – 3
6ML–11191–00	5 – 35
6CB–11192–02	5 – 39
6CB–11193–00	5 – 36
	52 – 4
6CB–11194–00	5 – 40
	52 – 5
6ML–11301–00	5 – 19
6ML–1131B–00	3 – 12
	52 – 8
6CE–1131C–00–9S	3 – 9
68T–11325–00	1 – 4
	3 – 33
6ML–11325–00	1 – 7
	5 – 20
63P–11325–01	1 – 1
	3 – 10
	3 – 20
63P–11325–11	1 – 16
	35 – 2
67F–11328–01	5 – 21
6AW–1132N–01	1 – 5
	3 – 35
6AW–1132P–00	1 – 3
	3 – 31
6KA–11351–00	3 – 30
	52 – 12
6CB–11355–00	36 – 13
	52 – 15
6CB–1135A–00	6 – 6
6ML–11410–00	4 – 1
6GR–11416–00	4 – 5
6GR–11416–10	4 – 5
6GR–11416–20	4 – 5
6GR–11416–30	4 – 5
6GR–11416–40	4 – 5
6GR–11416–A0	4 – 5
6GR–11417–00	4 – 6
6GR–11417–10	4 – 6
6GR–11417–20	4 – 6

PART NO. CODIGO Nº	REF. NO.
6GR–11417–30	4 – 6
6GR–11417–40	4 – 6
6GR–11417–A0	4 – 6
6CB–11426–03	4 – 7
6CB–11427–03	4 – 8
6CB–11478–00	4 – 2
6CB–1149A–00	6 – 10
6KA–11567–00	8 – 17
6CB–11590–04	8 – 28
6ML–11603–00	4 – 12
6ML–11631–00	4 – 11
6GR–11633–00	4 – 13
6GR–11634–00	4 – 15
6ML–11654–00	4 – 10
6ML–11656–00	4 – 14
6ML–11656–10	4 – 14
6ML–11656–20	4 – 14
6ML–11656–30	4 – 14
6ML–11656–40	4 – 14
6KW–11998–00	5 – 47
6KW–11999–00	5 – 48
6ML–12111–00	8 – 1
6ML–12113–00	8 – 4
6ML–12116–00	8 – 3
51Y–12119–00	8 – 7
6ML–12121–00	8 – 2
6GR–12145–00	8 – 8
6GR–12145–10	8 – 8
6GR–12145–20	8 – 8
6GR–12145–30	8 – 8
6GR–12145–40	8 – 8
6GR–12145–50	8 – 8
6GR–12145–60	8 – 8
6GR–12153–00	8 – 8
6GR–12153–10	8 – 8
6GR–12153–20	8 – 8
6GR–12153–30	8 – 8
6GR–12153–40	8 – 8
6GR–12153–50	8 – 8
6GR–12153–60	8 – 8
6GR–12153–70	8 – 8
6GR–12153–80	8 – 8
6GR–12153–90	8 – 8
6GR–12153–A0	8 – 8
6GR–12153–B0	8 – 8
6GR–12153–C0	8 – 8
6GR–12153–D0	8 – 8
6GR–12153–E0	8 – 8

PART NO. CODIGO Nº	REF. NO.
6GR–12153–F0	8 – 8
6GR–12153–G0	8 – 8
6GR–12153–H0	8 – 8
6GR–12153–J0	8 – 8
6GR–12153–K0	8 – 8
6GR–12153–L0	8 – 8
6GR–12153–M0	8 – 8
6GR–12153–N0	8 – 8
6GR–12153–P0	8 – 8
6GR–12153–R0	8 – 8
6GR–12153–S0	8 – 8
6GR–12153–T0	8 – 8
6ML–12171–00	8 – 9
6ML–12172–00	8 – 13
6ML–12181–00	8 – 11
6ML–12182–00	8 – 15
6CE–12411–10	1 – 2
	3 – 22
67F–12412–00	3 – 23
6CE–12413–A0–9S	3 – 25
6CE–12413–B0–9S	3 – 24
6ML–12422–00–9S	3 – 26
6CB–12427–11	3 – 27
	52 – 11
6CB–1242F–00	6 – 2
	52 – 6
6ML–1243E–00	7 – 21
6ML–1244G–00	7 – 16
6CE–1244H–00	7 – 18
6ML–1244J–00	7 – 19
6ML–12482–00	10 – 4
6CE–12483–00	18 – 18
6KA–12483–00	10 – 14
6ML–12483–00	18 – 25
6ML–12484–00	7 – 8
6ML–12485–00	18 – 24
6CE–1248A–00	18 – 16
6AW–12572–00	25 – 14
6CB–12577–00	7 – 5
6ML–12579–00	7 – 3
6R3–12581–00	25 – 15
6AW–12582–00	25 – 16
6R3–12583–00	25 – 17
6P2–12615–00	8 – 25
6P2–12623–00	8 – 20
	8 – 23
6CB–12645–01	8 – 19
6CB–1264A–01	8 – 22

PART NO. CODIGO Nº	REF. NO.
6ML–12651–00	17 – 14
6ML–12653–00	17 – 17
6ML–12659–00	17 – 19
6P2–12663–00	8 – 21
	8 – 24
6CB–13016–00	1 – 10
	13 – 5
6AW–13119–00	36 – 11
6LH–13132–00	13 – 32
6CB–13161–11	12 – 6
6CB–13171–11	12 – 1
6CB–13300–00	36 – 9
6CB–13329–00	36 – 10
6CB–13411–00	36 – 6
6AW–13415–00	36 – 7
	53 – 3
6ML–13437–60	17 – 27
N26–13440–03	1 – 6
	3 – 37
6CE–13446–10–9S	3 – 39
6CB–13473–00	36 – 17
	52 – 17
6CB–13477–00	3 – 40
	52 – 18
6CB–13490–00	36 – 16
6ML–13532–00	10 – 3
6CB–13545–00	10 – 6
6CB–13546–01	10 – 10
6CB–13547–00	10 – 11
6CB–13548–00	10 – 13
6GR–13556–00	11 – 3
6CB–13577–00	12 – 4
	12 – 9
68V–13577–01	14 – 4
6KA–13582–00	25 – 10
6KA–13587–00	25 – 13
6CB–13593–00	13 – 21
69J–13631–00	36 – 12
6ML–13641–00	9 – 13
6CB–13645–00	9 – 14
6ML–13646–00	9 – 15
6ML–13710–00	11 – 1
6ML–13711–00	11 – 2
63P–13716–00	13 – 20
6LH–13716–00	13 – 43
6GR–13751–00	11 – 6
6AW–13761–01	12 – 2
	12 – 7

PART NO. CODIGO Nº	REF. NO.
6LH–13781–00	13 – 34
6ML–13782–00	10 – 1
6LH–13784–00	13 – 35
6ML–13881–00	9 – 2
6ML–13898–00	11 – 8
6ML–13898–10	11 – 9
6CB–13906–01	13 – 8
6LH–13915–00	1 – 11
	13 – 24
6LH–13938–00	13 – 41
6ML–13971–00	14 – 10
6ML–13972–00	14 – 12
6ML–13974–00	14 – 11
6AW–1410B–00	12 – 3
	12 – 8
6C5–14127–10	13 – 23
6FM–14137–00	13 – 44
6DA–14146–00	13 – 10
6P2–14149–00	14 – 2
6ML–14180–00	13 – 1
6ML–14181–00	13 – 15
6ML–14182–00	13 – 2
6P2–14191–00	13 – 16
68V–14216–00	13 – 12
6CB–14216–00	13 – 6
6P2–14386–00	13 – 37
6AW–1441J–01	9 – 7
6ML–14440–00	9 – 6
6LH–1447B–00	13 – 33
6CB–14546–00	13 – 26
6CB–14564–00	13 – 9
63P–14567–00	13 – 36
6K8–14591–10	13 – 18
6KA–14711–00	35 – 20
6KA–14750–00	35 – 10
6CB–14755–01	35 – 12
	53 – 5
6ML–1475A–00	10 – 15
6ML–1475E–00	10 – 17
6ML–1475F–00	10 – 25
6ML–1475G–00	10 – 20
6CB–1475H–00	13 – 13
6CB–1475J–00	13 – 14
6ML–14872–00	18 – 23
6CB–14984–00	1 – 12
	13 – 31
6CB–14985–00	13 – 25
6EK–14989–00	10 – 19

PART NO. CODIGO Nº	REF. NO.
6CB–15142–00	6 – 8
6ML–15142–00	5 – 43
6CB–15187–00	3 – 5
6CB–15311–01	36 – 1
6BB–15316–01	35 – 29
6ML–15319–00	3 – 44
6ML–15362–00	36 – 18
6G8–15363–00	3 – 42
6ML–15373–00	9 – 12
6KA–15377–00	36 – 19
6ML–15411–00–9S	3 – 14
6ML–15421–00–9S	3 – 15
6ML–15451–00	3 – 17
	52 – 9
6ML–15461–00	3 – 18
	52 – 10
6CB–15481–00	3 – 6
6CB–15512–00	8 – 29
6CB–15544–00	6 – 4
6ML–21266–00	2 – 28
6KA–2134V–00	5 – 45
6KA–2134X–00	9 – 21
6KA–2153A–00	2 – 33
6KA–2153B–00	2 – 34
5GJ–21717–00	26 – 10
6E5–21744–00	10 – 12
6YM–22480–00	48 – 6
6ML–2416A–00	10 – 26
69J–24170–00	9 – 19
6FP–2419E–01	9 – 20
6CB–24217–00	13 – 7
60E–24300–01	14 – 9
6Y2–24307–52	16 – 1
6ML–24313–00	15 – 17
6ML–24314–00	15 – 2
6CB–24315–00	25 – 7
6CB–24317–00	14 – 6
6CB–24323–00	14 – 7
6CB–24324–00	14 – 5
6E5–24351–51	15 – 3
	16 – 3
6AW–24360–02	16 – 6
6Y2–24360–60	16 – 5
6G8–24376–00	10 – 18
6CE–24377–00	18 – 17
6AW–24377–01	15 – 4
688–24378–00	7 – 12
	10 – 9

NUMERICAL INDEX
INDICE NUMERICO

PART NO. CODIGO Nº	REF. NO.
6CE–24378–00	7 – 17
6E5–24378–00	14 – 8
6ML–24378–00	7 – 20
68V–24379–10	13 – 11
6GR–24410–02	13 – 27
6EK–24452–00	13 – 17
4SV–24453–00	13 – 38
6CB–24460–00	13 – 4
6CB–24461–00	14 – 1
6P3–24469–00	15 – 9
6CB–24482–00	13 – 19
6CB–24491–00	13 – 30
6CB–24492–00	13 – 28
6LH–24492–00	13 – 40
6CB–24501–01	1 – 9
	13 – 3
6P3–24519–00	15 – 8
6ML–24560–00	15 – 6
6P3–24562–21	15 – 7
6P3–24563–02	1 – 14
	15 – 11
6P3–24564–00	1 – 13
	15 – 10
6ML–24566–00	15 – 13
6ML–24568–00	15 – 12
6CB–24592–00	13 – 29
6ML–28100–00	15 – 19
67F–2812A–00	20 – 35
6CB–41132–01	35 – 13
6CB–41134–00	35 – 14
	53 – 6
6CB–41135–00	35 – 17
	53 – 8
6CE–41136–00	35 – 19
	53 – 9
6KA–41137–00	35 – 1
6CB–41138–00	35 – 16
	53 – 7
6GR–42134–00	31 – 8
6CB–42134–01	2 – 24
6AW–42169–00	25 – 9
6CE–42195–10	28 – 10
6BG–42384–00	25 – 2
6DA–42384–00	24 – 26
6GR–42384–00	27 – 3
6KA–42401–20	31 – 3
6GR–42402–01	47 – 3
6GR–42403–00	47 – 4

PART NO. CODIGO Nº	REF. NO.
6X9–4240A–00	47 – 5
6KA–42510–01–8D	32 – 1
6KA–42510–01–CE	32 – 1
6KA–42541–00	25 – 19
6CB–42545–00	2 – 5
	2 – 27
6ML–42610–00–8D	2 – 1
6ML–42610–00–CE	2 – 1
6ML–42613–00–8D	2 – 3
6ML–42613–00–CE	2 – 3
6KA–42615–20	24 – 7
6ML–42619–00	27 – 1
6ML–4261A–00–8D	2 – 2
6ML–4261A–00–CE	2 – 2
6KA–42625–00–8D	2 – 6
6KA–42625–00–CE	2 – 6
6ML–42626–00	2 – 25
6CB–42628–00	2 – 21
6ML–42643–00	25 – 24
6ML–42644–00	25 – 25
6CB–42647–A0	2 – 12
6KW–42662–00	5 – 49
6AW–42663–01	2 – 18
6ML–42678–00	2 – 30
6KA–4267A–00	2 – 31
6ML–42682–00	2 – 32
6DA–42697–00	31 – 20
6KN–42697–00	2 – 22
6LB–42697–00	2 – 23
6X9–42697–00	41 – 9
	43 – 12
6KA–42710–00–8D	24 – 1
6KA–42710–00–CE	24 – 1
6CB–42716–01	24 – 8
67F–42717–00	35 – 9
6DA–42717–01	24 – 25
6KA–42723–00–8D	26 – 11
6KA–42723–00–CE	26 – 11
6KA–42723–10–8D	46 – 1
6KA–42723–10–CE	46 – 1
6BG–42724–01	25 – 1
6E5–42724–01	35 – 8
6GR–42724–01	27 – 2
6KA–42725–01	24 – 2
676–42726–00	26 – 17
64G–42727–01	25 – 4
6KA–42740–00–8D	26 – 1
6KA–42740–00–CE	26 – 1

PART NO. CODIGO Nº	REF. NO.
6H4–42748–01	24 – 27
68F–42753–00	24 – 3
63P–42756–00	27 – 8
6ML–42756–00	24 – 31
69M–42758–01	18 – 5
	20 – 14
6CB–42761–00	24 – 5
6ML–42766–00	24 – 29
6KA–42769–00	26 – 16
6KA–42770–00–8D	26 – 2
6KA–42770–00–CE	26 – 2
6CE–42774–A0	26 – 9
6EE–42794–40	24 – 35
6EE–42794–50	24 – 36
6KA–42811–00	27 – 11
6KA–42815–00–8D	24 – 9
6KA–42815–00–CE	24 – 9
6KA–42816–00–8D	24 – 10
6KA–42816–00–CE	24 – 10
6KA–42817–00–8D	24 – 11
6KA–42817–00–CE	24 – 11
6CB–42818–00	24 – 15
6CB–42819–00	24 – 16
6ML–43111–00–8D	29 – 1
6ML–43111–00–CE	29 – 1
6ML–43112–00–8D	29 – 8
6ML–43112–00–CE	29 – 8
6KA–43121–00	31 – 13
6KA–43126–00	30 – 10
66T–43144–00	24 – 20
6G5–43144–00	29 – 14
6G5–43148–00	29 – 19
6KA–43181–00	29 – 16
6KA–43185–00	29 – 17
6KA–43311–00–8D	29 – 10
6KA–43311–00–CE	29 – 10
6KA–43318–00–8D	31 – 22
6KA–43318–00–CE	31 – 22
6GR–43333–00	29 – 23
6KA–43341–00	31 – 16
6KA–43342–00	31 – 17
6AW–43376–00	30 – 14
6GR–43378–10	31 – 10
6KA–43801–00	33 – 4
6KA–43804–01	34 – 3
6KA–43805–00	34 – 2
6KA–43806–00	34 – 5
6CE–4380P–00	33 – 12

PART NO. CODIGO Nº	REF. NO.
6KA–43810–00	33 – 3
61A–43811–00	33 – 9
63P–43812–20	33 – 76
61A–43813–02	33 – 18
6H1–43814–11	33 – 17
69J–43816–00	33 – 62
69J–43817–00	33 – 67
6ML–43818–00	33 – 25
69J–4381C–00	33 – 30
	33 – 35
6KA–4381E–00	30 – 18
6KA–4381F–00	30 – 20
69J–4381J–00	33 – 63
69J–43820–01	33 – 78
6ML–43821–00	33 – 77
6KA–43828–00	33 – 70
6H1–43829–00	33 – 73
6KA–4382A–00	30 – 4
69J–4382E–00	33 – 11
6ML–43830–00	33 – 33
69J–43831–00	33 – 65
69J–43833–02	33 – 21
69J–43835–10	33 – 19
6KA–43840–00	33 – 2
6CJ–43841–00	33 – 42
6CJ–43843–00	33 – 53
6H1–43844–10	33 – 55
63P–43844–20	33 – 50
69J–43845–00	33 – 28
69A–4384F–00	33 – 39
69J–4384G–00	33 – 58
6H1–4384G–11	33 – 54
69J–4384H–00	33 – 10
61A–4384H–10	33 – 81
6CJ–4384M–00	33 – 38
69J–43851–00	33 – 49
69J–43853–00	33 – 45
69J–43854–00	33 – 57
69J–43855–00	33 – 52
6H1–43856–10	33 – 56
61A–43861–00	33 – 14
	33 – 16
	33 – 74
63P–43861–20	33 – 6
6KA–43862–00	34 – 13
6D8–43863–00	33 – 27
	33 – 75
61A–43864–00	33 – 80

PART NO. CODIGO Nº	REF. NO.
60V–4386A–00	33 – 44
6KA–4386K–00	34 – 6
61A–43871–00	33 – 15
69J–43871–00	33 – 61
6H1–43872–00	33 – 7
61A–43874–00	33 – 79
6H1–43875–00	33 – 29
61A–43875–10	33 – 82
61A–43876–01	33 – 26
6KA–43879–00	34 – 8
6KA–4387G–00	34 – 14
6ML–43880–00	34 – 1
6ML–43881–00	34 – 9
6KA–43882–00	34 – 12
6H1–43883–00	33 – 43
69J–43888–00	33 – 71
69J–4388E–01	33 – 23
69J–4388F–00	33 – 68
6KA–4388F–00	34 – 11
69J–4388H–00	33 – 66
69J–4388J–00	33 – 20
6KA–43892–00	34 – 4
6CJ–43893–00	33 – 46
69J–43894–00	33 – 41
69J–43899–01	33 – 31
61A–4389H–01	33 – 8
69J–4389J–00	33 – 32
	33 – 36
6KA–438A0–01	31 – 5
6CE–44117–10	28 – 16
6CE–44118–A0	28 – 20
6KA–44120–00	28 – 22
6CE–44121–10	28 – 18
6CE–44122–20	28 – 11
6ML–44142–00	28 – 9
6KA–44150–00	37 – 14
6KB–44150–00	39 – 14
6X9–44189–00	41 – 10
	43 – 13
6X9–44189–10	41 – 15
	43 – 18
6X9–44189–20	41 – 4
	43 – 5
6KA–44190–00	38 – 32
	40 – 32
6CE–44194–01	32 – 28
6CE–44311–01	37 – 16
	39 – 16

PART NO. CODIGO Nº	REF. NO.
6AW–44312–00	37 – 22
	38 – 11
	39 – 22
	40 – 11
6CB–44312–00	37 – 29
	39 – 29
6CE–44315–00	37 – 26
	39 – 26
	53 – 23
	53 – 38
6AW–44322–00	37 – 18
	39 – 18
	53 – 32
6CE–44323–01	37 – 25
	39 – 25
	53 – 37
6GR–44331–00	31 – 6
6GR–44332–00	31 – 7
6CE–44352–00	37 – 23
	39 – 23
	53 – 35
6CE–44361–00	38 – 3
	40 – 3
6CE–44362–00	38 – 9
	40 – 9
6AW–44363–00	38 – 12
	40 – 12
6AW–44365–01	37 – 21
	38 – 1
	38 – 10
	39 – 21
	40 – 1
	40 – 10
	53 – 22
6AW–44366–01	38 – 2
	38 – 5
	40 – 2
	40 – 5
	53 – 13
6KA–44385–00	45 – 1
6P2–44391–00	24 – 28
6CE–44511–00	32 – 30
6CE–44514–00	32 – 20
6KA–44521–00	35 – 39
	53 – 14
6CE–44526–00	32 – 21
6G5–44526–00	29 – 3
6CE–44532–01	32 – 23

NUMERICAL INDEX
INDICE NUMERICO

PART NO. CODIGO Nº	REF. NO.
6CE–44533–00	32 – 29
6CE–44536–00	32 – 22
6CE–44551–00–CA	32 – 6
6AW–44552–00–CA	32 – 18
6KA–44555–00	32 – 9
6CE–44574–00	32 – 8
6KA–45111–01–8D	35 – 25
6KA–45111–01–CE	35 – 25
6CB–45113–10	35 – 26
	53 – 12
6CE–45123–00	35 – 24
	53 – 11
6CE–45127–00	35 – 23
	53 – 10
6BB–45152–01	35 – 30
61A–45155–01	35 – 35
6KA–45181–00	35 – 18
6KA–45211–00–8D	38 – 4
	40 – 4
6KA–45211–00–CE	38 – 4
	40 – 4
6KA–45214–00	38 – 19
	40 – 19
6KA–45215–00	38 – 20
	40 – 20
6CE–45224–00	38 – 22
	40 – 22
6CE–45225–00	38 – 23
	40 – 23
6AW–45244–00	37 – 42
	39 – 42
6G5–45251–02	1 – 15
	29 – 2
6KA–45254–00	38 – 26
	40 – 26
6KA–45255–00	38 – 27
	40 – 27
6ML–45300–00–8D	37 – 1
6MM–45300–00–8D	39 – 1
6ML–45300–00–CE	37 – 1
6MM–45300–00–CE	39 – 1
6KA–45301–00–8D	37 – 2
	39 – 2
6KA–45301–00–CE	37 – 2
	39 – 2
69J–45318–01	35 – 32
6CE–45321–20	37 – 11
	39 – 11

PART NO. CODIGO Nº	REF. NO.
6CE–45332–00–CA	37 – 69
6CF–45332–01–CA	39 – 67
6AW–45335–00–CA	37 – 31
	39 – 31
688–45341–10	37 – 4
	39 – 4
6KA–45344–00	37 – 37
	39 – 37
6CE–45361–10	37 – 84
	39 – 80
6CE–45373–00	1 – 19
	38 – 30
	40 – 30
6CE–45375–00	37 – 8
	39 – 8
663–45376–00	37 – 7
	39 – 7
63P–45378–00	37 – 9
	38 – 7
	39 – 9
	40 – 7
6ML–45379–00	35 – 37
6CB–45383–00	37 – 82
	39 – 78
6CB–45384–00	37 – 83
	39 – 79
6KA–45501–00	37 – 44
	39 – 44
6T5–45539–00	37 – 43
	39 – 43
6KA–45550–00	37 – 48
6KB–45550–00	39 – 48
6KB–45560–00	39 – 50
676–45567–00	37 – 80
6CB–45567–00	37 – 57
	39 – 55
676–45567–10	37 – 80
6CB–45567–10	37 – 57
	39 – 55
676–45567–20	37 – 80
6CB–45567–20	37 – 57
	39 – 55
676–45567–30	37 – 80
6CB–45567–30	37 – 57
	39 – 55
676–45567–40	37 – 80
6CB–45567–40	37 – 57
	39 – 55

PART NO. CODIGO Nº	REF. NO.
676–45567–50	37 – 80
6CB–45567–50	37 – 57
	39 – 55
6KA–45571–00	37 – 71
6CB–45576–00	37 – 72
6CF–45576–00	39 – 69
6CB–45577–00	37 – 77
	39 – 74
6CB–45577–10	37 – 77
	39 – 74
6CB–45577–20	37 – 77
	39 – 74
6CB–45577–30	37 – 77
	39 – 74
6CB–45577–40	37 – 77
	39 – 74
6CB–45577–50	37 – 77
	39 – 74
6CB–45577–60	37 – 77
	39 – 74
6K1–45578–01	39 – 76
6K1–45578–10	39 – 76
6K1–45578–20	39 – 76
6K1–45578–30	39 – 76
6K1–45578–40	39 – 76
6K1–45578–50	39 – 76
6K1–45578–60	39 – 76
6AW–45587–00	37 – 35
	39 – 35
6AW–45587–10	37 – 35
	39 – 35
6AW–45587–20	37 – 35
	39 – 35
6AW–45587–30	37 – 35
	39 – 35
6AW–45587–40	37 – 35
	39 – 35
6AW–45587–50	37 – 35
	39 – 35
6AW–45587–60	37 – 35
	39 – 35
6CB–45611–00	37 – 58
6KB–45611–00	39 – 56
6ML–45631–00	37 – 67
	39 – 65
6E5–45633–01	37 – 68
	39 – 66
6CB–45634–00	37 – 59

PART NO. CODIGO Nº	REF. NO.
6CB–45634–00	39 – 57
61A–45635–00	37 – 63
	39 – 61
6H1–45668–00	37 – 62
	39 – 60
6KA–45802–00	37 – 45
	39 – 45
6KA–45802–10	37 – 45
	39 – 45
6CB–45824–00	37 – 51
	39 – 52
69J–45987–00	38 – 34
	40 – 34
688–45997–01	38 – 35
	40 – 35
6ML–45B76–00	38 – 39
6MM–45B76–00	40 – 39
6ML–45B78–00	38 – 39
6MM–45B78–00	40 – 39
6ML–45B80–00	38 – 39
6MM–45B80–00	40 – 39
6ML–45B82–00	38 – 39
6MM–45B82–00	40 – 39
6ML–45B84–00	38 – 39
6MM–45B84–00	40 – 39
6ML–45B86–00	38 – 39
6MM–45B86–00	40 – 39
6CE–45C81–10	38 – 40
	40 – 40
6KA–46153–00	35 – 33
6KA–47445–00	31 – 14
6KA–47651–00	30 – 16
6X9–48119–10	43 – 10
6X9–4811C–10	41 – 7
6X9–48127–10	43 – 4
6X9–48127–20	41 – 3
6X9–48128–00	42 – 7
	44 – 7
6X9–48171–00	44 – 5
6X9–48176–10	41 – 17
	43 – 20
6ML–4820A–00	28 – 1
6X9–48211–10	42 – 4
6X9–48219–00	41 – 12
	43 – 15
6X9–4821A–10	44 – 4
6X9–4821B–00	42 – 5
6X9–48222–10	43 – 3

PART NO. CODIGO Nº	REF. NO.
6X9–48224–00	41 – 5
	43 – 6
6X9–48224–10	43 – 7
6X9–48225–00	41 – 6
	43 – 8
6X9–48225–10	43 – 9
6X9–4822A–10	41 – 2
6X9–4822B–10	43 – 2
6X9–48400–10	41 – 8
	43 – 11
6X9–48901–10	41 – 16
	43 – 19
6X9–48A01–10	41 – 1
6X9–48A02–10	43 – 1
6GR–6154A–01	47 – 2
6GR–615A0–10	47 – 1
6CE–68303–00	28 – 29
6GR–81115–10	47 – 8
68V–81147–00	11 – 5
6P2–81336–01	20 – 37
6ML–81410–00	17 – 3
6CB–81443–00	22 – 6
6CB–81639–10	20 – 31
6CE–81800–02	23 – 1
6CE–81801–01	23 – 5
6CE–81807–00	23 – 8
6CB–81809–00	23 – 14
6CE–81810–00	23 – 3
67F–81813–00	23 – 6
6CE–81820–00	23 – 7
6CE–81821–00	23 – 11
6ML–81822–00	22 – 4
6CB–81823–A0	22 – 8
6CB–81826–00	23 – 22
69J–81828–00	23 – 23
6CE–81830–00	23 – 16
6CB–81832–00	23 – 9
6CB–81836–00	23 – 10
6CE–81839–00	23 – 19
67F–8183R–00	23 – 13
60V–8183T–00	23 – 17
6P2–8183X–00	20 – 22
6CE–81840–01	23 – 4
67F–81841–00	23 – 12
6CE–81842–00	23 – 18
6BR–81845–00	18 – 7
67F–81846–00	23 – 24
6CE–81850–00	23 – 2

PART NO. CODIGO Nº	REF. NO.
6CE–81869–00	23 – 21
67F–81891–00	23 – 15
6ML–81919–00	20 – 39
6KA–81920–00	20 – 1
6Y8–81920–01	48 – 2
6ML–81929–00	20 – 8
6C5–81941–01	23 – 20
6ML–81942–00	17 – 21
6CB–81948–02	20 – 12
6KW–81949–00	22 – 12
6AW–81950–00	20 – 19
6CB–81952–00	21 – 21
6AW–8195A–00	20 – 26
6CE–81960–10	18 – 11
6CE–81972–00–9S	18 – 12
6CE–81975–00	18 – 13
6X6–81980–00	50 – 8
6CE–81980–01	21 – 2
6EE–81994–40	17 – 28
6EE–81994–50	17 – 29
6AH–81996–00	24 – 37
6ML–82105–00	20 – 42
6P2–82113–00	20 – 34
6GR–82119–00	20 – 7
6U0–82127–00	29 – 5
6KA–82147–00	29 – 13
6AW–82149–00	32 – 14
67F–82151–00	20 – 29
6CE–82151–00	20 – 25
6GR–82151–00	20 – 2
6G1–82151–01	48 – 15
67F–82151–10	20 – 30
67F–82151–40	20 – 27
67F–82151–50	20 – 28
6ML–82170–00	20 – 24
6ML–82310–00	19 – 1
6CB–82314–00	19 – 4
6CB–82316–01	18 – 3
6A0–82317–01	17 – 22
6ML–82388–00	21 – 11
6X6–82510–02	49 – 3
6X6–82510–11	50 – 3
6Y8–82521–11	47 – 10
6Y8–82521–31	48 – 16
703–82532–00	49 – 4
	50 – 4
6KA–82553–00	30 – 9
6Y8–82553–01	48 – 1

NUMERICAL INDEX
INDICE NUMERICO

PART NO. CODIGO Nº	REF. NO.
682–82556–00	49 – 6
	50 – 6
6GR–82563–00	21 – 20
6X6–82570–34	49 – 1
6X6–82570–41	50 – 1
6X6–82570–60	50 – 9
6X6–82571–00	49 – 2
6X6–82571–10	50 – 2
6X6–82571–20	50 – 10
6X6–82575–10	50 – 5
688–82575–12	49 – 5
6KA–8257V–01	27 – 5
6X9–82580–60	42 – 1
6X9–82580–70	44 – 1
6Y8–82582–11	48 – 4
6ML–82588–00	20 – 10
6ML–82589–00	21 – 7
6GR–8258A–01	47 – 6
6GR–8258A–11	47 – 7
6X6–8258A–31	49 – 8
6X6–8258A–41	50 – 14
6ML–82590–00	21 – 1
6ML–82594–00	21 – 4
6X6–8259E–20	50 – 12
6KA–8259M–01	22 – 11
6X6–82716–00	50 – 13
68F–82846–00	20 – 33
6KA–83383–01	9 – 26
703–83383–A0	49 – 7
	50 – 7
6YM–83512–00	48 – 9
6X9–83532–00	41 – 11
	43 – 14
6Y9–83553–00	48 – 12
6YM–83553–00	48 – 11
6Y8–83553–02	48 – 14
6YD–8356N–00	48 – 13
6AW–83651–01	21 – 18
6AW–8366B–10	51 – 2
63P–8366C–00	51 – 3
68F–83688–10	11 – 4
6YM–83710–17	48 – 5
6X6–83720–00	50 – 11
6YM–83956–00	48 – 7
6YD–83957–00	48 – 8
6X9–84411–00	41 – 13
	43 – 16
6X9–84412–00	41 – 14

PART NO. CODIGO Nº	REF. NO.
6X9–84412–00	43 – 17
6P2–85075–00	19 – 7
68F–85119–00	9 – 9
6Y8–85371–01	42 – 2
	44 – 2
	44 – 6
	47 – 9
	48 – 3
64J–85516–01	18 – 4
	20 – 13
68F–85516–01	9 – 10
6CB–85544–00	20 – 32
689–85547–01	15 – 1
6CB–85561–00	17 – 5
6CE–85564–00	28 – 8
6CB–85580–00	17 – 4
6ML–85586–00	17 – 12
6X6–85590–51	42 – 3
	44 – 3
6ML–85592–00	17 – 10
6P2–85780–01	6 – 11
6CB–85790–00	21 – 15
6ML–85790–00	21 – 16
6GR–85887–00	30 – 6
6P2–85896–00	19 – 6
6ML–8591A–00	18 – 1
6C5–86120–00	10 – 23
6CB–86120–00	6 – 1
6LH–87226–00	13 – 42
6KA–87228–00	31 – 1
6KA–8722G–00	31 – 2
6YM–87278–00	48 – 10
63P–8A4L0–07	51 – 1
K0F–A3741–00	8 – 5
K0F–A3742–00	8 – 6
6ML–W0001–00	52 – 1
6KA–W0001–20	53 – 1
6CE–W0078–02	1 – 20
	53 – 30
6ML–W009A–00–9S	5 – 1
6ML–W009C–00–9S	5 – 11
6ML–W1165–00	4 – 9
6ML–W1390–00	13 – 22
6ML–W1510–00	3 – 2
6GR–W436G–00–8D	31 – 19
6GR–W436G–00–CE	31 – 19
6ML–W4380–00–8D	33 – 1
6ML–W4380–00–CE	33 – 1

PART NO. CODIGO Nº	REF. NO.
6CB–W4624–00	8 – 27
6ML–W8145–00	17 – 1
6EK–W9010–00	17 – 2
90101–12067	29 – 24
	29 – 24
	29 – 28
90101–12068	29 – 28
90101–12071	29 – 28
90101–12072	29 – 28
90101–12073	29 – 28
90101–12074	29 – 28
90101–12076	29 – 28
	29 – 28
90101–12077	29 – 28
90101–14004	32 – 15
90105–06035	6 – 3
90105–06037	3 – 29
	3 – 46
	6 – 7
90105–06039	25 – 30
90105–06106	42 – 6
90105–06151	3 – 19
	3 – 41
	22 – 9
90105–06229	6 – 9
90105–06M07	3 – 13
	5 – 22
90105–08175	3 – 7
	5 – 28
	5 – 33
90105–08178	6 – 5
90105–08220	5 – 29
	5 – 34
90105–08M61	37 – 85
	39 – 81
90105–08M87	9 – 1
	22 – 5
90105–10M00	38 – 31
	40 – 31
90105–14005	32 – 25
90109–06277	5 – 38
	5 – 42
90109–06M80	26 – 8
90110–05039	38 – 21
	38 – 25
	40 – 21
	40 – 25
90111–06144	26 – 3

PART NO. CODIGO Nº	REF. NO.
90111–06144	30 – 19
	30 – 21
	31 – 21
	31 – 23
90111–08078	2 – 13
90116–10067	38 – 14
	40 – 14
90119–05M03	17 – 9
90119–05M04	9 – 27
90119–06047	12 – 5
	12 – 10
90119–06287	35 – 38
90119–06291	25 – 29
90119–06293	18 – 6
	20 – 15
90119–06299	9 – 18
90119–06309	9 – 24
90119–06310	15 – 14
90119–06MA3	18 – 14
90119–06MA6	9 – 17
90119–07001	5 – 5
	5 – 15
90119–07234	5 – 6
	5 – 16
90119–08020	9 – 16
90119–08168	28 – 4
90119–08175	28 – 5
90119–08176	31 – 18
90119–08180	37 – 30
	39 – 30
90119–08182	35 – 4
90119–08187	24 – 24
90119–08191	37 – 28
	39 – 28
	53 – 40
90119–10008	38 – 18
	40 – 18
90119–10009	38 – 17
	40 – 17
90119–10024	30 – 2
	32 – 19
	32 – 31
	38 – 14
	40 – 14
90119–10050	8 – 18
90119–10064	30 – 3
90119–10070	35 – 27
90119–10M07	8 – 31

PART NO. CODIGO Nº	REF. NO.
90149–05048	37 – 47
	39 – 47
90149–11001	5 – 27
	5 – 32
90151–05M05	3 – 34
90151–06M02	3 – 11
	3 – 21
	35 – 3
90157–06M13	42 – 8
	44 – 8
90159–06053	26 – 5
	26 – 15
90170–30M18	37 – 41
	39 – 41
90171–18M04	38 – 37
	40 – 37
90179–06M28	2 – 4
	5 – 46
90179–08003	22 – 2
90179–14009	31 – 11
90179–16017	37 – 49
	39 – 49
90183–02M03	37 – 65
	39 – 63
90183–05M06	2 – 29
90183–061A8	26 – 4
	26 – 14
90185–05002	38 – 24
	38 – 28
	40 – 24
	40 – 28
90185–06M07	5 – 50
	28 – 14
90185–14M00	32 – 16
	32 – 26
90201–02M00	37 – 64
	39 – 62
90201–053R1	2 – 10
90201–06068	28 – 13
90201–065F1	42 – 10
	44 – 10
90201–10M01	8 – 32
90201–11008	28 – 26
90201–12064	28 – 6
90201–12426	29 – 26
90201–13M01	29 – 25
90201–156J2	24 – 13
90201–15M58	32 – 13

PART NO. CODIGO Nº	REF. NO.
90201–16032	32 – 10
90201–186F1	5 – 8
	5 – 18
90201–301U7	37 – 39
	39 – 39
90201–32008	37 – 79
90201–35008	32 – 12
90201–40M00	32 – 2
90201–41008	37 – 54
90201–68008	37 – 34
	39 – 34
90202–08M41	28 – 12
90202–32M19	32 – 11
90202–40M47	32 – 5
90206–15M18	24 – 14
90214–30003	37 – 40
	39 – 40
90249–06M19	29 – 20
90250–08M07	37 – 66
	39 – 64
90269–05001	17 – 20
90280–04002	37 – 24
	39 – 24
	53 – 36
90282–05008	37 – 81
	39 – 77
90340–08002	37 – 6
	39 – 6
90340–14M06	5 – 9
	36 – 4
90340–18M09	5 – 7
	5 – 17
90386–08008	28 – 3
90386–10001	28 – 27
90386–10M16	29 – 18
90386–11001	28 – 24
90386–15M73	24 – 12
90386–18M14	30 – 13
	33 – 24
90386–39M89	32 – 3
90387–06119	17 – 23
90387–06176	9 – 11
90387–06289	9 – 23
	15 – 16
90387–06M03	25 – 28
90387–06M43	26 – 7
	26 – 13
90387–07054	2 – 8

NUMERICAL INDEX
INDICE NUMERICO

PART NO. CODIGO Nº	REF. NO.
90387–07054	9 – 4
90387–08104	28 – 7
90387–08M37	24 – 23
90387–08M45	2 – 16
90387–10094	2 – 14
90387–11005	5 – 26
	5 – 31
90387–28013	32 – 24
90401–19001	3 – 38
90413–10001	25 – 12
90430–06M03	5 – 23
90430–08003	1 – 18
	37 – 5
	39 – 5
	53 – 15
90430–10004	21 – 17
90430–14115	5 – 10
	51 – 4
90430–14M09	1 – 17
	36 – 5
	53 – 2
90445–09120	7 – 13
90445–096H2	7 – 14
90445–107A5	18 – 19
90445–13M25	16 – 2
90445–14021	25 – 8
90445–15M03	24 – 19
90446–15006	20 – 23
90462–06013	18 – 21
90464–07209	10 – 8
90464–08004	21 – 6
	24 – 33
90464–09013	10 – 16
90464–10M57	10 – 22
90464–11012	10 – 21
90464–11121	17 – 26
90464–12009	14 – 17
90464–12010	7 – 2
	14 – 15
90464–12012	14 – 18
	14 – 19
90464–12183	17 – 16
	20 – 17
	21 – 10
	21 – 14
90464–13013	14 – 16
90464–13249	9 – 25
	9 – 28

PART NO. CODIGO Nº	REF. NO.
90464–13249	18 – 9
	20 – 16
	21 – 13
	27 – 7
90464–16001	21 – 19
90464–16017	25 – 11
90464–18004	22 – 10
90464–18011	25 – 26
90464–18246	21 – 9
90464–19M45	24 – 34
90464–20181	10 – 7
	18 – 10
	20 – 18
	21 – 3
	27 – 10
90464–20258	24 – 4
90464–23001	10 – 27
	14 – 14
90464–23004	7 – 1
90464–23005	9 – 29
90464–26002	7 – 7
	7 – 9
90464–99004	9 – 8
	33 – 83
90465–11M10	7 – 4
	7 – 6
	7 – 10
	7 – 15
	10 – 5
	15 – 5
	15 – 18
	17 – 11
	18 – 26
	18 – 27
	25 – 3
	25 – 20
	28 – 2
	30 – 1
90465–11M59	7 – 22
	27 – 4
90465–14M66	7 – 23
90467–08M18	18 – 28
90467–09M09	7 – 11
	18 – 20
90467–130A5	25 – 21
90467–140A8	25 – 22
90467–140A9	14 – 13
	25 – 23

PART NO. CODIGO Nº	REF. NO.
90467–141A2	14 – 3
90468–18008	28 – 15
	28 – 19
90480–06M19	16 – 4
90480–10M23	9 – 22
	15 – 15
90480–12314	17 – 25
	19 – 5
90480–13004	2 – 7
	9 – 3
90480–13163	25 – 6
90480–13M24	26 – 6
	26 – 12
90480–14029	25 – 27
90480–16009	2 – 11
90480–19031	25 – 5
90480–22M81	24 – 22
90501–10M77	37 – 60
	39 – 58
90506–16010	29 – 22
90506–22001	24 – 18
91318–05025	33 – 59
91318–05040	33 – 64
91380–04010	31 – 9
91380–05020	38 – 29
	40 – 29
91490–20025	31 – 12
91490–40030	38 – 38
	40 – 38
91690–30020	29 – 21
91690–40010	3 – 16
91690–60022	30 – 11
91809–08006	5 – 4
	5 – 14
92990–06100	2 – 19
92990–08600	2 – 15
92990–18200	38 – 36
	40 – 36
92995–10600	38 – 15
	40 – 15
92995–14600	32 – 17
	32 – 27
93101–28019	37 – 32
	39 – 32
	53 – 24
93101–30019	37 – 75
	39 – 72
	53 – 28

PART NO. CODIGO Nº	REF. NO.
93101–30030	37 – 74
	39 – 71
	53 – 27
93102–38008	8 – 26
	52 – 14
93102–85008	4 – 4
	52 – 13
93104–22M07	37 – 17
	39 – 17
	53 – 19
	53 – 31
93106–10001	37 – 13
	39 – 13
	53 – 18
93106–19001	33 – 5
93210–064A5	33 – 51
93210–06ME6	30 – 12
93210–07003	37 – 10
	38 – 8
	39 – 10
	40 – 8
	53 – 16
93210–08391	33 – 48
93210–09165	28 – 23
	33 – 72
	38 – 33
	40 – 33
93210–11001	19 – 8
93210–17239	33 – 22
93210–17MF9	30 – 7
93210–19001	19 – 2
93210–19MJ3	36 – 20
	53 – 4
93210–22MF1	37 – 46
	39 – 46
	53 – 26
93210–24M79	3 – 43
	52 – 19
93210–26658	3 – 8
	36 – 15
	52 – 7
	52 – 16
93210–27370	3 – 45
	52 – 20
93210–33M49	37 – 12
	39 – 12
	53 – 17
93210–35321	32 – 4

PART NO. CODIGO Nº	REF. NO.
93210–37160	37 – 20
	39 – 20
	53 – 21
	53 – 34
93210–66001	33 – 69
93210–69MG6	37 – 36
	39 – 36
	53 – 25
93210–94003	37 – 19
	39 – 19
	53 – 20
	53 – 33
93211–02001	37 – 76
	39 – 73
	53 – 29
93306–209U0	37 – 70
93311–83280	37 – 3
	39 – 3
93311–85894	37 – 50
	39 – 51
93315–43061	37 – 73
	39 – 70
93332–00048	39 – 68
93332–000A4	37 – 53
93332–000A5	37 – 78
93340–67011	37 – 56
	39 – 54
93341–440U5	39 – 75
93399–99962	37 – 33
	39 – 33
93410–10082	28 – 28
93410–37M04	32 – 7
93420–50093	35 – 34
93501–04011	37 – 61
	39 – 59
93501–08001	33 – 47
93503–16003	33 – 37
93505–32038	33 – 13
	33 – 34
93604–07M13	28 – 21
93604–35236	33 – 60
93605–10108	8 – 10
	8 – 12
	8 – 14
	8 – 16
93606–12019	3 – 3
	3 – 4
	4 – 3

PART NO. CODIGO Nº	REF. NO.
93606–12019	37 – 27
	39 – 27
	53 – 39
93606–19M23	35 – 22
93608–16M16	35 – 7
	35 – 28
	36 – 3
	37 – 52
	38 – 6
	38 – 13
	39 – 53
	40 – 6
	40 – 13
93700–06002	29 – 7
	29 – 9
	29 – 11
94702–00442	1 – 8
	5 – 51
95022–06035	17 – 7
95023–06012	18 – 22
95027–06025	3 – 28
95380–06600	2 – 20
	10 – 24
95380–10600	38 – 16
	40 – 16
95380–12600	29 – 27
95780–06300	42 – 9
	44 – 9
95780–08300	2 – 17
95780–10300	30 – 15
95812–06025	36 – 8
95D75–06025	28 – 25
	28 – 30
95D75–06040	36 – 14
95D75–08060	11 – 7
95D95–06010	35 – 36
95D95–06012	17 – 18
	18 – 8
	21 – 5
	24 – 21
	24 – 30
	24 – 32
	27 – 6
	27 – 9
	27 – 12
	30 – 17
	31 – 15
	31 – 24

NUMERICAL INDEX
INDICE NUMERICO

PART NO. CODIGO Nº	REF. NO.
95D95–06014	5 – 44
	24 – 6
95D95–06016	9 – 5
	10 – 2
	17 – 15
	20 – 11
	21 – 12
	21 – 22
	22 – 7
	36 – 21
95D95–06020	18 – 2
	20 – 9
	21 – 8
	35 – 11
95D95–06025	17 – 24
	18 – 15
	19 – 3
95D95–06030	5 – 37
	5 – 41
	17 – 8
95D95–08012	24 – 17
95D95–08016	20 – 3
95D95–08020	20 – 4
95D95–08025	5 – 24
97513–06520	20 – 21
97513–08545	22 – 1
97580–08535	31 – 4
97595–05516	30 – 5
	30 – 8
97602–04306	34 – 7
97602–04308	34 – 10
97780–50016	2 – 9
	2 – 26
97780–50620	20 – 36
97780–60520	25 – 18
97985–04308	22 – 3
97D95–06010	29 – 15
97D95–06012	35 – 31
97E75–06525	28 – 17
97E75–08535	35 – 21
	36 – 2
97E75–08560	35 – 15
97E75–10535	35 – 6
97E75–10545	35 – 5
97E75–10570	38 – 18
	40 – 18
97E95–06510	29 – 6
	29 – 12

PART NO. CODIGO Nº	REF. NO.
97E95–06516	17 – 13
	20 – 5
	20 – 6
	20 – 38
97E95–06520	19 – 9
97E95–06525	29 – 4
97E95–06610	20 – 20
97E95–08516	20 – 40
	20 – 41
97E95–08520	37 – 38
	39 – 38
98507–04008	13 – 39
98780–06530	3 – 32
98780–06550	3 – 36
99001–09600	37 – 15
	39 – 15
99002–03600	33 – 40
99009–47500	37 – 55
99530–08012	17 – 6
99530–14016	8 – 30