YAMAHA

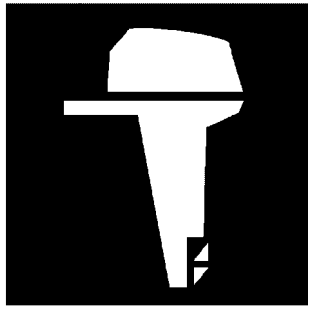

PARTS CATALOGUE
CATALOGO DE REPUESTOS

F100BET'21 (60CN)

YAMAHA
GENUINE
Parts & Accessories

1V60C-200SA

( )

F100BET
PARTS CATALOGUE
©2021 by Yamaha Motor Co., Ltd.
1st edition, July 2021
All rights reserved.
Any reprinting or unauthorized use
without the written permission of
Yamaha Motor Co., Ltd.
is expressly prohibited.
Printed in Japan.

F100BET
CATALOGO DE REPUESTOS
©2021 por Yamaha Motor Co., Ltd.
1ª edición, julio 2021
Todos los derechos reservados.
Toda reproducción o uso no autorizado
sin el consentimiento escrito de
Yamaha Motor Co., Ltd.
quedan expresamente prohibidos
Impreso en Japón.

FOREWORD

This Parts Catalogue is related to the parts for the model(s) on the cover page. When you are ordering replacement parts, please refer to this Parts Catalogue and quote both part numbers and part names correctly.

1. Modifications or additions which have been made after the issue of the Parts Catalogue will be announced in the Parts News.
   It is advisable that you make the necessary corrections to the Parts Catalogue according to the Parts News.

2. Abbreviations
   The following abbreviations are used in this Parts Catalogue.
   "UR" Use specified parts number.
   "UN" Use as many as needed.
   "AP" Alternate Parts
   "LM" Locally Made (Parts need to be ordered locally)
   "F#" Frame No. (Applicable machine No.)
   "O/S" Over Size

3. The number of components for assembly
   - Parts, which are to be supplied in an assembly, are listed with a dot (.) in front of the part name as shown below.
   - The numeral appearing to the right of each component part indicates the quantity of parts for each assembly unit.

PART NO.	DESCRIPTION	Q'TY	REMARKS
2F5–83310–60	FRONT FLASHER LIGHT ASSY	2	
115–83311–60	.BULB (6V–18W)	1	

4. Applicable colours of graphics are represented in the "REMARKS" as shown below.

PART NO.	DESCRIPTION	Q'TY	REMARKS
2N4–24110–00–X5	FUEL TANK COMP.	2	MXR
3J1–24240–10	.GRAPHIC, FUEL TANK	1	FOR MXR

5. Note that the illustrations for reference in finding parts numbers are not to be used for assembling. When assembling, please use the applicable service manual.

6. The asterisk (*) before a reference number indicates modified items after the first edition.

7. Applicable Serial No.
   Engine Serial No.

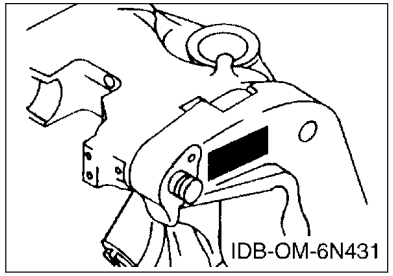

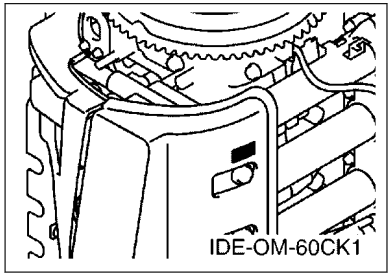

8. Applicable Engine Starting Serial No.

Model	Serial No.	Model	Serial No.
F100B	60C-1017001		

9. Applicable Colour Code

Abbreviation	Colour Name	Colour Code
DBN1	DARK BLUISH GRAY 1	008D

10. Quantity Column Information

Column No.	Name Of Q'ty Column	Applicable Model
1	60CN	F100BET

PROLOGO

Este catálogo de repuestos corresponde a las piezas para el o los modelos que figuran en la página de portada. Al formular el pedido de repuestos, se ruega citar este catálogo y especificar correctamente el número y el nombre de las piezas.

1. Las modificaciones y agregados que se hayan realizado después de la edición de este Catálogo de Repuestos, serán anunciados en las Informaciones de Recambios.
   Es recomendable que se hagan las correcciones necesarias en el Catálogo de Repuestos de acuerdo con las Informaciones de Recambios.

2. Abreviaciones
   En este. Catálogo de Repuestos se emplean las siguientes abreviaciones.
   "UR" Usar el número de partes especificado
   "UN" Usar la cantidad necesaria
   "AP" Piezas sustitutivas
   "LM" Fabricación local (Hay que pedir los repuestos en las cercanías)
   "F#" Nº de bastidor (Nº aplicable a la máquina)
   "O/S" Sobredimensionado

3. La cantidad de componentes para el montaje
   - Los componentes, suministrados como conjunto, se describen con un punto (.) que precede al nombre del parte como se indica a continuación.
   - La numeración que aparece a la derecha de cada descripción indica la cantidad de partes por cada unidad de conjunto.

CODIGO Nº	DESCRIPCION	CANT.	OBSERVACIONES
2F5–83310–60	ENSAMBLAJE DE LA LUZ	2	
115–83311–60	.BOMBILLA (6V–18W)	1	

4. Los colores de los componentes se indican como sigue en la columna de "OBSERVACIONES".

CODIGO Nº	DESCRIPCION	CANT.	OBSERVACIONES
2N4–24110–00–X5	COMP. DEL TANQUE	2	MXR
3J1–24240–10	.GRAFICO, DEL TANQUE	1	PARA MXR

5. Debe tenerse en cuenta que las ilustraciones sirven como guia para la búsqueda de los números de partes y no deben usarse para el montaje. Durante el montaje, se recomienda usar el manual de taller correspondiente.

6. EL asterisco (*) antes del número de referencia indica los elementos modificados después de la primera edición.

7. Números de serie
   Nº de Serie del motor

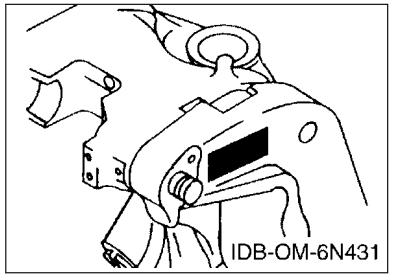

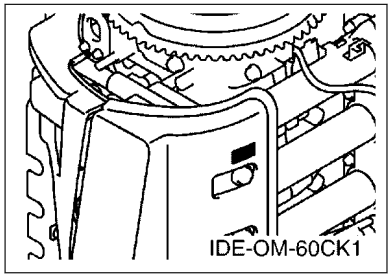

8. Números de serie del motor

Modelo	Nº de serie	Modelo	Nº de serie
F100B	60C-1017001		

9. Códigos de color aplicables

Abreviatura	Nombre de color	Código de color
DBN1	DARK BLUISH GRAY 1	008D

10. Informacion para la columna de cantidades

Columna Nº	Nombre de la columna de cantidades	Modelo aplicable
1	60CN	F100BET

CONTENTS

SCHEDULED SERVICE PARTS....1
TOP COWLING....2
CYLINDER & CRANKCASE 1....3
CRANKSHAFT & PISTON....5
CYLINDER & CRANKCASE 2....6
VALVE....8
INTAKE....10
CARBURETOR 1....11
CARBURETOR 2....13
FUEL 1....14
FUEL 2....16
GENERATOR....17
ELECTRICAL 1....18
ELECTRICAL 2....19
ELECTRICAL 3....21
STARTING MOTOR....22
BOTTOM COWLING....24
CONTROL....27
BRACKET 1....29
BRACKET 2....31
POWER TRIM & TILT ASSY 1....33
POWER TRIM & TILT ASSY 2....36
UPPER CASING....37
OIL PAN....39
LOWER CASING & DRIVE 1....40
LOWER CASING & DRIVE 2....44
STEERING GUIDE....46
REMOTE CONTROL BOX....47
REMOTE CONTROL ASSY....48
METER....51
OPTIONAL PARTS 1....52
OPTIONAL PARTS 2....53
REPAIR KIT 1....54
REPAIR KIT 2....55
REPAIR KIT 3....56

INDEX

NUMERICAL INDEX....58

CONTENIDO

PARTES DE REPUESTO TEMPORALES..... 1
SOPORTE SUPERIOR..... 2
CILINDRO & CARTER 1..... 3
CIGUENAL & PISTON.....5
CILINDRO & CARTER 2..... 6
VALVULA.....8
ADMISION..... 10
CARBURADOR 1..... 11
CARBURADOR 2..... 13
COMBUSTIBLE 1..... 14
COMBUSTIBLE 2..... 16
GENERADOR.....17
EQUIPO ELECTRICO 1..... 18
EQUIPO ELECTRICO 2..... 19
EQUIPO ELECTRICO 3..... 21
MOTOR DE ARRANQUE..... 22
CUBIERTA INFERIOR..... 24
CONTROL..... 27
SOPORTE 1..... 29
SOPORTE 2..... 31
COMPONER Y PODER VARILLA 1.....33
COMPONER Y PODER VARILLA 2.....36
FUNDA SUPERIOR.....37
OIL PAN.....39
IMPULSOR E INFERIOR 1..... 40
IMPULSOR E INFERIOR 2..... 44
DIRECCIONGUIAR..... 46
CONTROL REMOTO COMPLETO..... 47
CONTROL REMOTO COMPL.....48
MEDIDOR.....51
PARTES OPCIONALES 1..... 52
PARTES OPCIONALES 2..... 53
ESTUCHE REPARATION 1..... 54
ESTUCHE REPARATION 2..... 55
ESTUCHE REPARATION 3..... 56

INDICE

INDICE NUMERICO..... 58

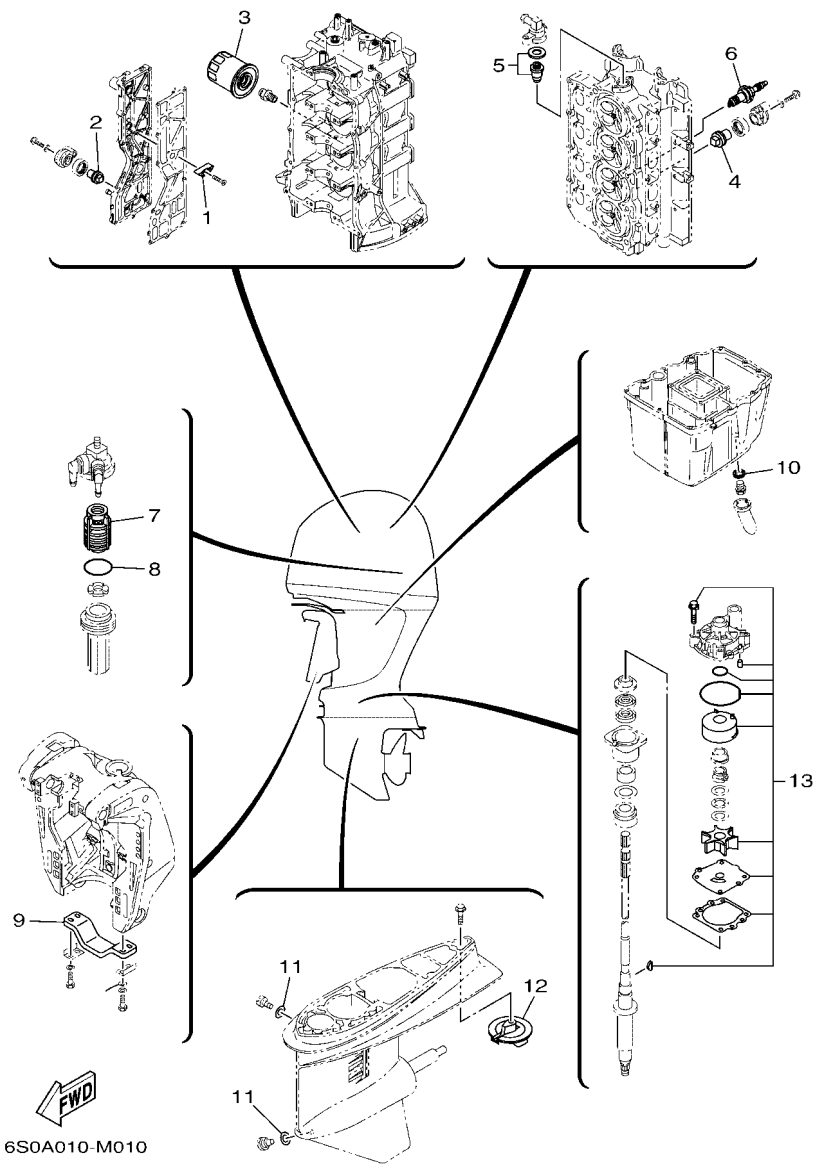

FIG. 1 SCHEDULED SERVICE PARTS — PARTES DE REPUESTO TEMPORALES

REF. NO.	PART NO. CODIGO Nº	DESCRIPTION DESCRIPCION	60CN					REMARKS OBSERVACIONES
1	6E5–11325–00	ANODE ANODO	3					
2	67F–11325–01	ANODE ANODO	1					
3	5GH–13440–71	ELEMENT ASSY, OIL CLEANER ELEMENTO FILTRO DE ACEITE	1					
4	67F–11325–01	ANODE ANODO	2					
5	67F–12411–01	THERMOSTAT TERMOSTAT	1					
6	94702–00391	PLUG, SPARK (NGK LFR5A-11) BUJIA (NGK LFR5A-11)	4					
7	61N–24563–10	ELEMENT, FILTER ELEMENTO DEL FILTRO	1					
8	93210–32738	O-RING ANILLO O	1					
9	6G5–45251–02	ANODE CATODE	1					
10	90430–14M09	GASKET JUNTA	1					
11	90430–08003	GASKET JUNTA	2					
12	6E5–45371–01	TAB-TRIM QUILLA ESTABILIZADOR	1					
13	60C–W0078–01	WATER PUMP REPAIR KIT ESTUCHE REPARACION BOMBA AGUA	1					

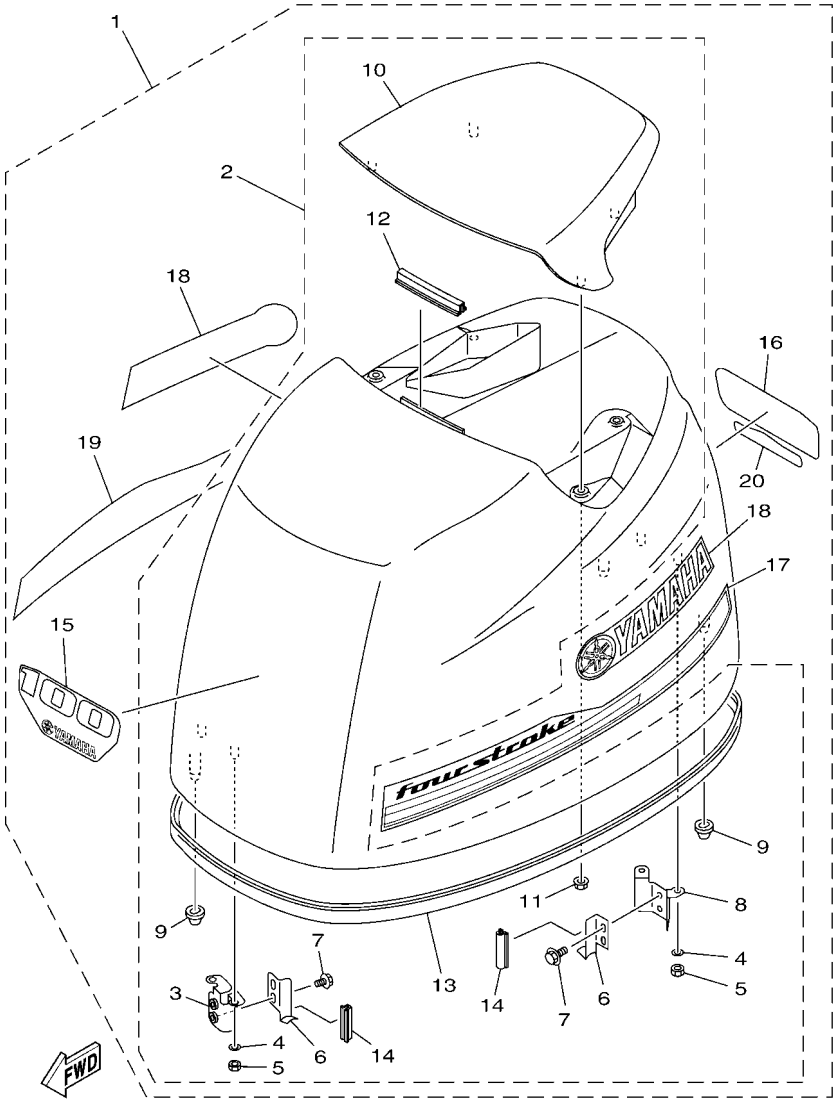

60CG200-P020

FIG. 2 TOP COWLING — SOPORTE SUPERIOR

REF. NO.	PART NO. CODIGO Nº	DESCRIPTION DESCRIPCION	60CN					REMARKS OBSERVACIONES
1	60C–42610–42	TOP COWLING ASSY SOPORTE SUPERIOR COMPL.	1					
2	67F–4261A–02	.TOP COWLING W/O GRAPHICS .SOPORTE SUPERIOR SIN GRAFICOS	1					
3	67F–42647–00	..HOLDER, CLAMP BAND ..MORDAZA DE ABRAZADERA	1					
4	92990–06100	..WASHER, SPRING ..ARANDELA PLANA	4					
5	95380–06600	..NUT, HEXAGON ..TUERCA	4					
6	68V–42652–00	..HOOK ..GANCHO	2					
7	97E95–06512	..BOLT, HEXAGON W/W DEEP RECESS ..TORNILLO HEXAGONAL CON RONDONA	4					
8	67F–42649–00	..HOLDER, CLAMP BAND ..MORDAZA DE ABRAZADERA	1					
9	67F–42662–01	..DAMPER ..AMORTIGUADOR	3					
10	67F–42613–00–8D	..MOLDING, AIR DUCT ..MOLDURA CONDUCTO AIRE	1					
11	90179–06M24	..NUT ..TUERCA	4					
12	61N–42628–01	..SEAL ..SELLO DE GOMA	1					
13	67F–42615–00	..SEAL ..SELLO	1					
14	67F–42628–01	..SEAL ..SELLO DE GOMA	2					
15	60C–42677–21	.GRAPHIC, FRONT .CALCAMONIA FRONTAL	1					
16	60C–42678–31	.GRAPHIC, REAR .CALCAMONIA TRASERA	1					
17	60C–42675–11	.GRAPHIC, SIDE 1 .CALCAMONIA LATERAL 1	1					
18	60C–42681–11	.MARK, COWLING .MARCA DE CUBIERTA	2					
19	60C–42676–11	.GRAPHIC, SIDE 2 .CALCAMONIA LATERAL 2	1					
20	6AJ–4267A–01	.GRAPHIC, REAR 2 .CALCAMONIA TRASERA 2	1					

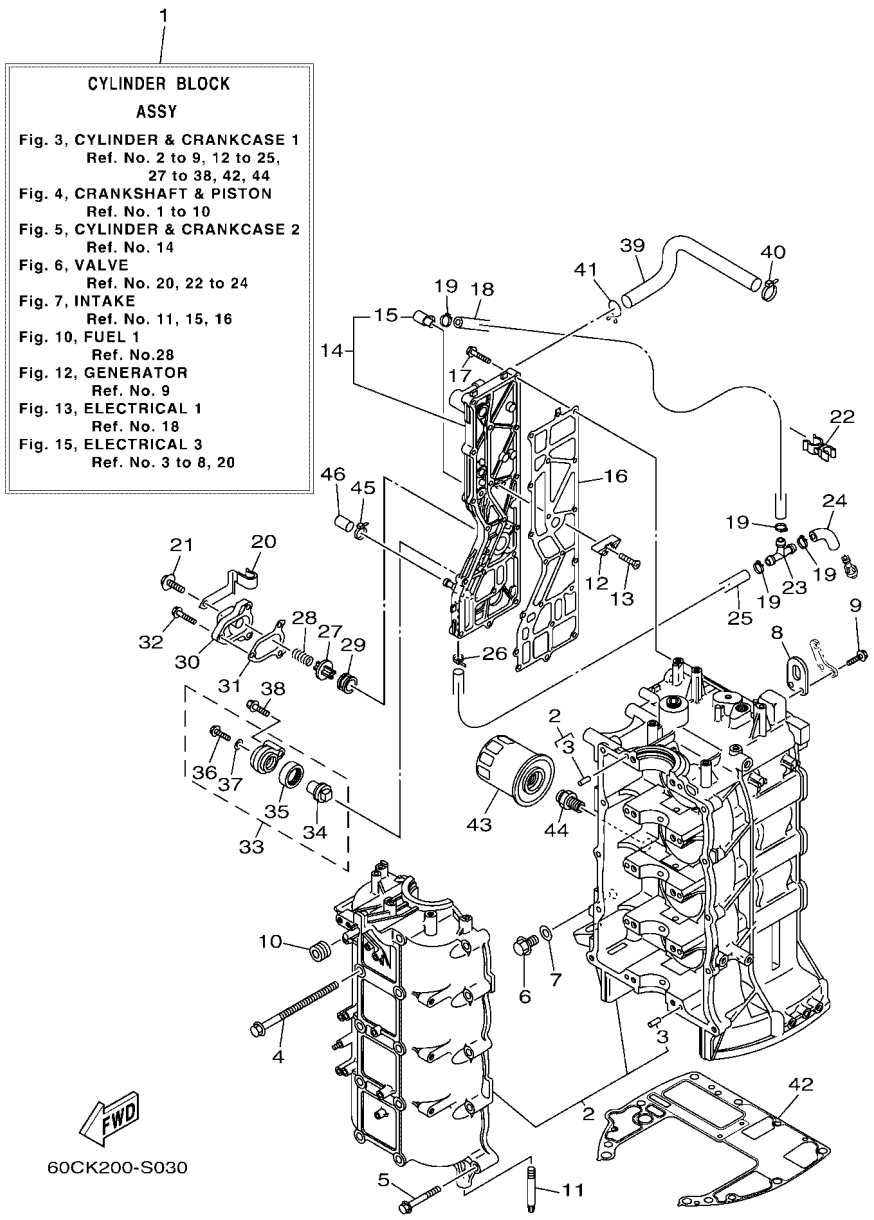

FIG. 3 CYLINDER & CRANKCASE 1 — CILINDRO & CARTER 1

REF. NO.	PART NO. CODIGO Nº	DESCRIPTION DESCRIPCION	60CN					REMARKS OBSERVACIONES
1	60C–W009B–12–9S	CYLINDER BLOCK ASSY CILINDRO BLOQUE COMPLETO	1					
2	67F–15100–04	CRANKCASE ASSY CARTER COMPLETO	1					
3	93606–12019	.PIN, DOWEL .PASADOR DE CLAVIJA	10					
4	90119–10M88	BOLT, WITH WASHER TORNILLO CON ARANDELA	10					
5	90119–08M66	BOLT, WITH WASHER TORNILLO CON ARANDELA	10					
6	90340–14M06	PLUG, STRAIGHT SCREW TORNILLO, DE DRENAJE	1					
7	90430–14115	GASKET JUNTA	1					
8	62Y–11119–00	HANGER, ENGINE SOPORTE DEL MOTOR	2					
9	97E95–06520	BOLT, HEXAGON W/W DEEP RECESS TORNILLO HEXAGONAL CON RONDONA	4					
10	90480–12314	GROMMET TAPON	1					
11	67F–15142–00	GUIDE 1 GUIA 1.	2					
12	6E5–11325–00	ANODE ANODO	3					
13	98780–04016	SCREW, FLAT HEAD TORNILLO, CABEZA PLANA	3					
14	67F–41113–51–9S	OUTER COVER, EXHAUST CUBOERTA EXTERIOR DE ESCAPE	1					
15	676–11372–00	.NIPPLE, HOSE .NIPLE DE MANGUERA	1					
16	67F–41114–A2	GASKET, EXHAUST OUTER COVER EMPAQUE	1					
17	90119–06MA4	BOLT, WITH WASHER TORNILLO CON ARANDELA	18					
18	90445–10024	HOSE (L360) TUBO (L360)	1					
19	90465–11M10	CLAMP BRIDA	4					
20	90462–10060	CLAMP BRIDA	1					
21	97E95–06512	BOLT, HEXAGON W/W DEEP RECESS TORNILLO HEXAGONAL CON RONDONA	1					
22	90464–10010	CLAMP BRIDA	1					
23	688–24378–00	PIPE, JOINT 3 TUBO DE UNION 3	1					
24	61A–24316–00	PIPE 6 TUBO 6	1					
25	90445–10016	HOSE (L280) TUBO (L280)	1					
26	90465–11M10	CLAMP BRIDA	2					
27	6G5–12416–00	VALVE, PRESSURE CONTROL VALVULA DE CONTROL DE PRESION	1					

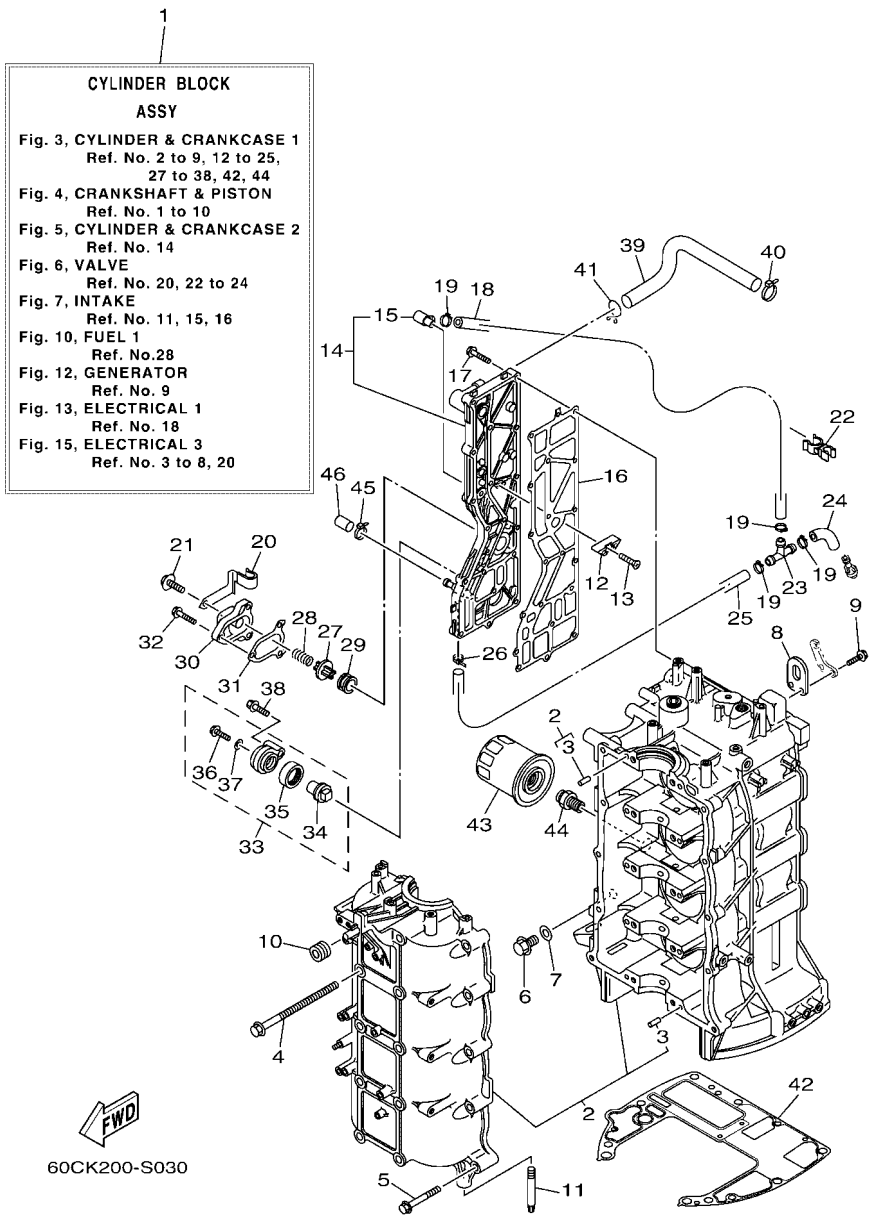

FIG. 3 CYLINDER & CRANKCASE 1 — CILINDRO & CARTER 1

REF. NO.	PART NO. CODIGO Nº	DESCRIPTION DESCRIPCION	60CN					REMARKS OBSERVACIONES
28	90501–16M11	SPRING, COMPRESSION RESORTE DE COMPRESION	1					
29	90480–20M05	GROMMET TAPON	1					
30	67F–1246A–A0–9S	COVER 1 CUBIERTA 1	1					
31	67F–12435–A0	GASKET EMPAQUE	1					
32	90119–06MA2	BOLT, WITH WASHER TORNILLO CON ARANDELA	3					
33	69J–11301–01	ANODE COVER ASSY CONJUNTO CUBIERTA DE ANODO	1					
34	67F–11325–01	.ANODE .ANODO	1					
35	67F–11328–01	.GROMMET, ANODE .TAPON	1					
36	90105–06M07	.BOLT, FLANGE .TORNILLO	1					
37	90430–06M03	.GASKET .JUNTA	1					
38	97E75–08540	BOLT, HEXAGON W/W DEEP RECESS TORNILLO HEXAGONAL CON RONDONA	1					
39	67F–1243A–00	HOSE 1 TUBO 1	1					
40	90465–11M59	CLAMP BRIDA	1					
41	90467–20M15	CLIP PRESILLA	1					
42	68V–11351–00	GASKET, CYLINDER JUNTA, DE CILINDRO	1					
43	5GH–13440–71	ELEMENT ASSY, OIL CLEANER ELEMENTO FILTRO DE ACEITE	1					
44	90401–20007	BOLT, UNION PERNO DE UNION	1					
45	90465–11M10	CLAMP BRIDA	1					EXCEPT FLUSHING KIT EXCEPT FLUSHING KIT
46	67F–13448–00	CAP TAPA	1					EXCEPT FLUSHING KIT EXCEPT FLUSHING KIT

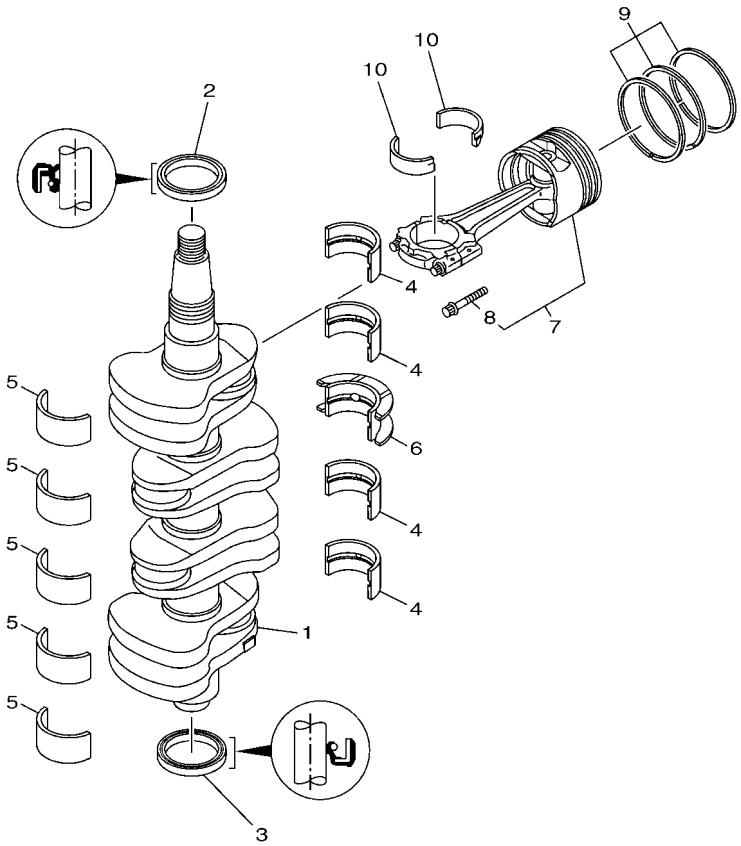

60CB300-K030

FIG. 4 CRANKSHAFT & PISTON — CIGUENAL & PISTON

REF. NO.	PART NO. CODIGO Nº	DESCRIPTION DESCRIPCION	60CN					REMARKS OBSERVACIONES
1	6D8–11411–01	CRANKSHAFT CIGUENAL	1					
2	93102–48008	OIL SEAL SELLO ACEITE	1					
3	93101–48001	OIL SEAL SELLO ACEITE	1					
4	6D8–11416–00	PLANE BEARING, CRANKSHAFT 1 COJINETE PLANO 1	4					UR GREEN UR GREEN
	6D8–11416–10	PLANE BEARING, CRANKSHAFT 1 COJINETE PLANO 1	4					UR BLUE UR BLUE
	6D8–11416–20	PLANE BEARING, CRANKSHAFT 1 COJINETE PLANO 1	4					UR RED UR RED
5	6D8–11417–00	PLANE BEARING, CRANKSHAFT 2 COJINETE PLANO 2	5					UR YELLOW UR YELLOW
	6D8–11417–10	PLANE BEARING, CRANKSHAFT 2 COJINETE PLANO 2	5					UR GREEN UR GREEN
	6D8–11417–20	PLANE BEARING, CRANKSHAFT 2 COJINETE PLANO 2	5					UR BLUE UR BLUE
	6D8–11417–30	PLANE BEARING, CRANKSHAFT 2 COJINETE PLANO 2	5					UR RED UR RED
6	6D8–11418–00	PLANE BEARING, CRANKSHAFT 3 COJINETE PLANO 3	1					UR GREEN UR GREEN
	6D8–11418–10	PLANE BEARING, CRANKSHAFT 3 COJINETE PLANO 3	1					UR BLUE UR BLUE
	6D8–11418–20	PLANE BEARING, CRANKSHAFT 3 COJINETE PLANO 3	1					UR RED UR RED
7	60C–W1164–20	PISTON/CON-ROD ASSY(STD) PISTON/BIELA COMPLETA(NORMA)	4					
	60C–W1164–30	PISTON/CON-ROD ASSY(0.25MM OS) PISTON/BIELA COMP. (0:25MM OS)	4					AP AP
8	K1C–A3275–00	.BOLT, CONNECTING ROD .TORNILLO DE BIELA	2					
9	60C–11603–10	PISTON RING SET (STD) JUEGO DE ANILLOS (NORMA)	4					
	60C–11604–10	PISTON RING SET (0.25MM O/S) JUEGO DE ANILLOS (0.25MM O/S)	4					AP AP
10	6D8–11656–00	PLANE BEARING, CONNECTING ROD COJINETE PLANO	8					UR YELLOW UR YELLOW
	6D8–11656–10	PLANE BEARING, CONNECTING ROD COJINETE PLANO	8					UR GREEN UR GREEN
	6D8–11656–20	PLANE BEARING, CONNECTING ROD COJINETE PLANO	8					UR BLUE UR BLUE
	6D8–11656–30	PLANE BEARING, CONNECTING ROD COJINETE PLANO	8					UR RED UR RED

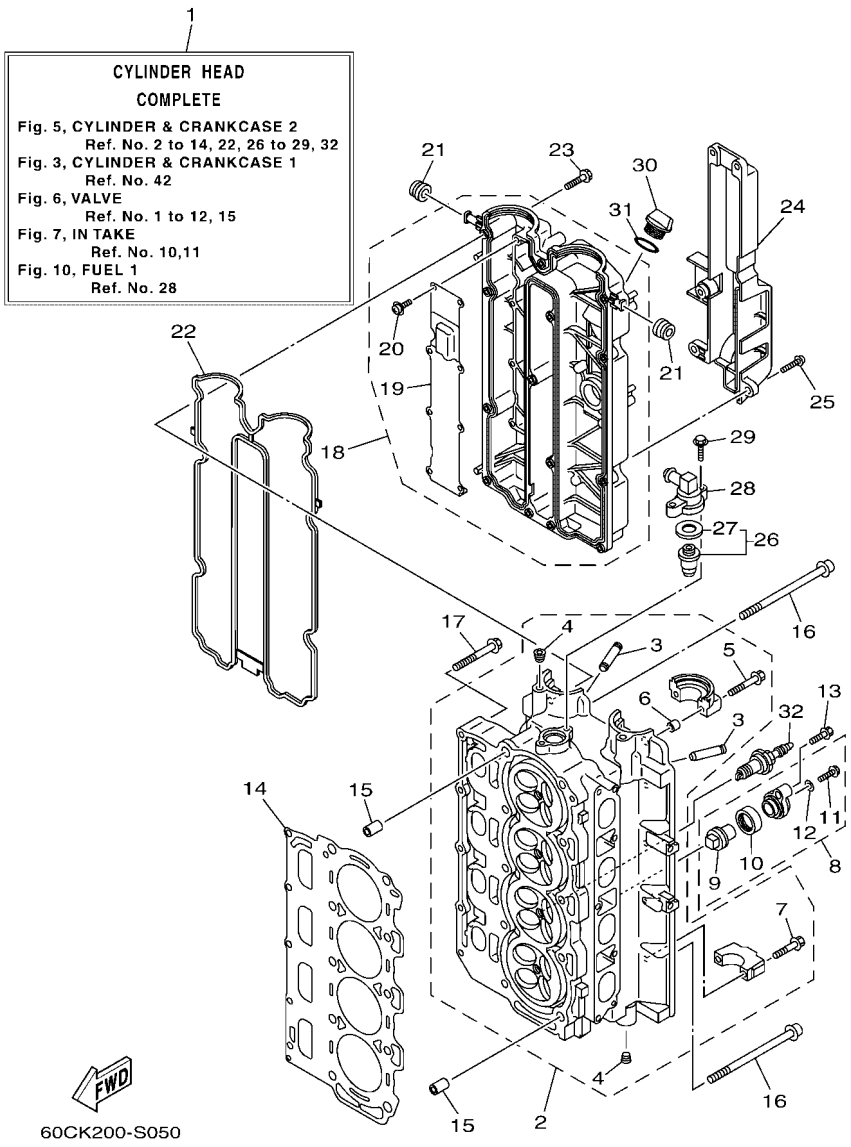

FIG. 5 CYLINDER & CRANKCASE 2 — CILINDRO & CARTER 2

REF. NO.	PART NO. CODIGO Nº	DESCRIPTION DESCRIPCION	60CN					REMARKS OBSERVACIONES
1	67F–W009A–27–9S	CYLINDER HEAD COMPLETE CILINDRD CULATA COMPLETO	1					
2	6D8–11110–20–9S	CYLINDER HEAD ASSY CULATA DE CILINDRO COMPLETA	1					
3	67F–11133–10	.GUIDE, VALVE 1 .GUIA DE VALVULA 1	16					
4	90344–51019	.PLUG, TAPER SCREW .TAPON DE TORNILLO AHUSADO	4					
5	90119–07235	.BOLT/WASHER-CAM CAPS .TORNILLO CON ARANDELA	4					
6	91809–08006	.PIN, DOWEL .PASADOR DE CLAVIJA	4					
7	90119–07234	.BOLT, WITH WASHER .TORNILLO CON ARANDELA	16					
8	69J–11301–01	ANODE COVER ASSY CONJUNTO CUBIERTA DE ANODO	2					
9	67F–11325–01	.ANODE .ANODO	1					
10	67F–11328–01	.GROMMET, ANODE .TAPON	1					
11	90105–06M07	.BOLT, FLANGE .TORNILLO	1					
12	90430–06M03	.GASKET .JUNTA	1					
13	97E75–08540	BOLT, HEXAGON W/W DEEP RECESS TORNILLO HEXAGONAL CON RONDONA	2					
14	67F–11181–03	GASKET, CYLINDER HEAD 1 JUNTA, DE CULATA 1	1					
15	99530–14016	PIN, DOWEL PASADOR, DE ESPIGA	2					
16	90155–10005	SCREW, FLAT FILLISTER TORNILLO CABEZA PLANA RAN.	10					
17	90119–08M91	BOLT, WITH WASHER TORNILLO CON ARANDELA	5					
18	6D8–11191–01–9S	COVER, CYLINDER HEAD 1 TAPA CULATA DE CILINDRO 1	1					
19	67F–11168–00	.COVER, BREATHER .CUBIERTA RESPIRADERO	1					
20	97607–04208	.SCREW, WITH WASHER .TORNILLO CAB CON PLANA C/ARAN	8					
21	90480–12072	GROMMET TAPON	2					
22	6D8–11356–01	SEAL, CYLINDER 2 RETEN ACEITE CILINDRO 2	1					
23	97E95–06530	BOLT, HEXAGON W/W DEEP RECESS TORNILLO HEXAGONAL CON RONDONA	14					
24	67F–11192–01	COVER, CYLINDER HEAD 2 TAPA CULATA DE CILINDRO 2	1					
25	90119–06280	BOLT, WITH WASHER TORNILLO CON ARANDELA	5					
26	67F–12411–01	THERMOSTAT TERMOSTAT	1					
27	67F–12412–00	.SEAL, THERMOSTAT .SELLO TERMOSTATO	1					

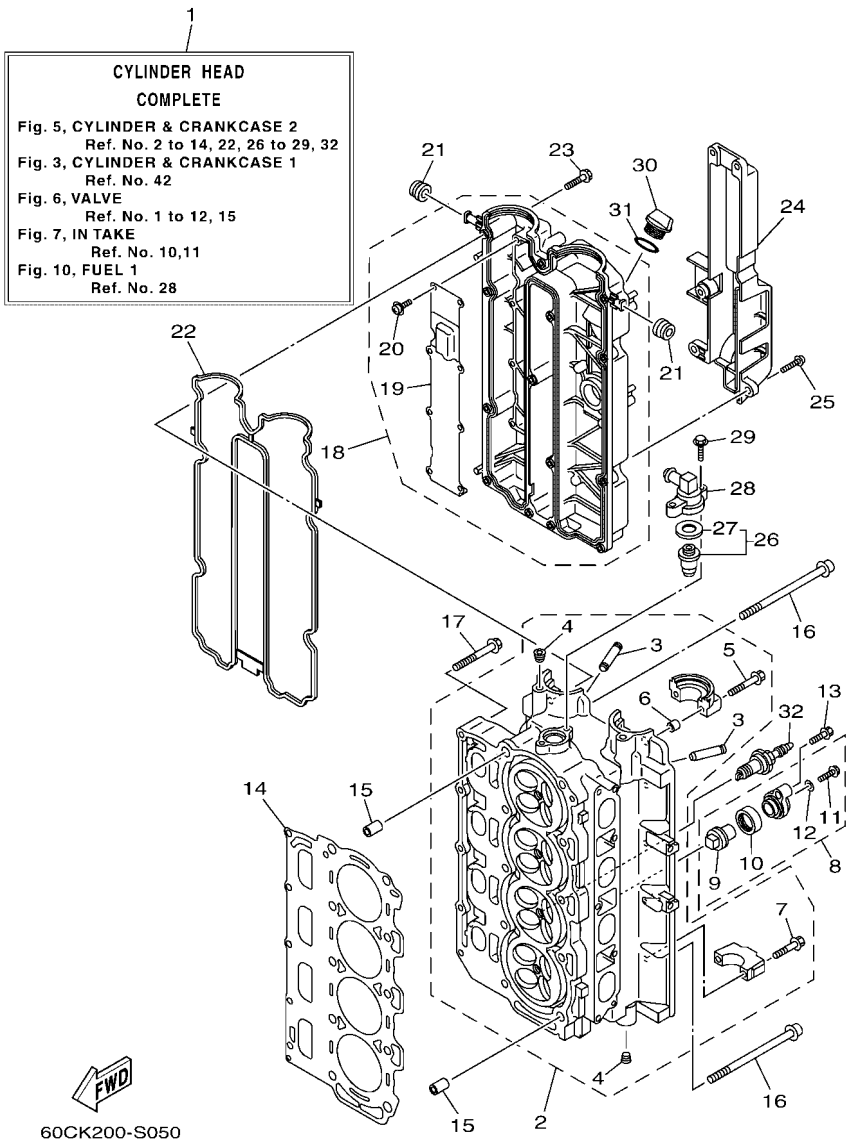

FIG. 5 CYLINDER & CRANKCASE 2 — CILINDRO & CARTER 2

REF. NO.	PART NO. CODIGO Nº	DESCRIPTION DESCRIPCION	60CN					REMARKS OBSERVACIONES
28	68V–12413–00–9S	COVER, THERMOSTAT CUBIERTA TERMOSTATO	1					
29	97E95–06525	BOLT, HEXAGON W/W DEEP RECESS TORNILLO HEXAGONAL CON RONDONA	2					
30	6G8–15363–00	PLUG, OIL TAPON DE ACEITE	1					
31	93210–24M79	O-RING ANILLO O	1					
32	94702–00391	PLUG, SPARK (NGK LFR5A-11) BUJIA (NGK LFR5A-11)	4					

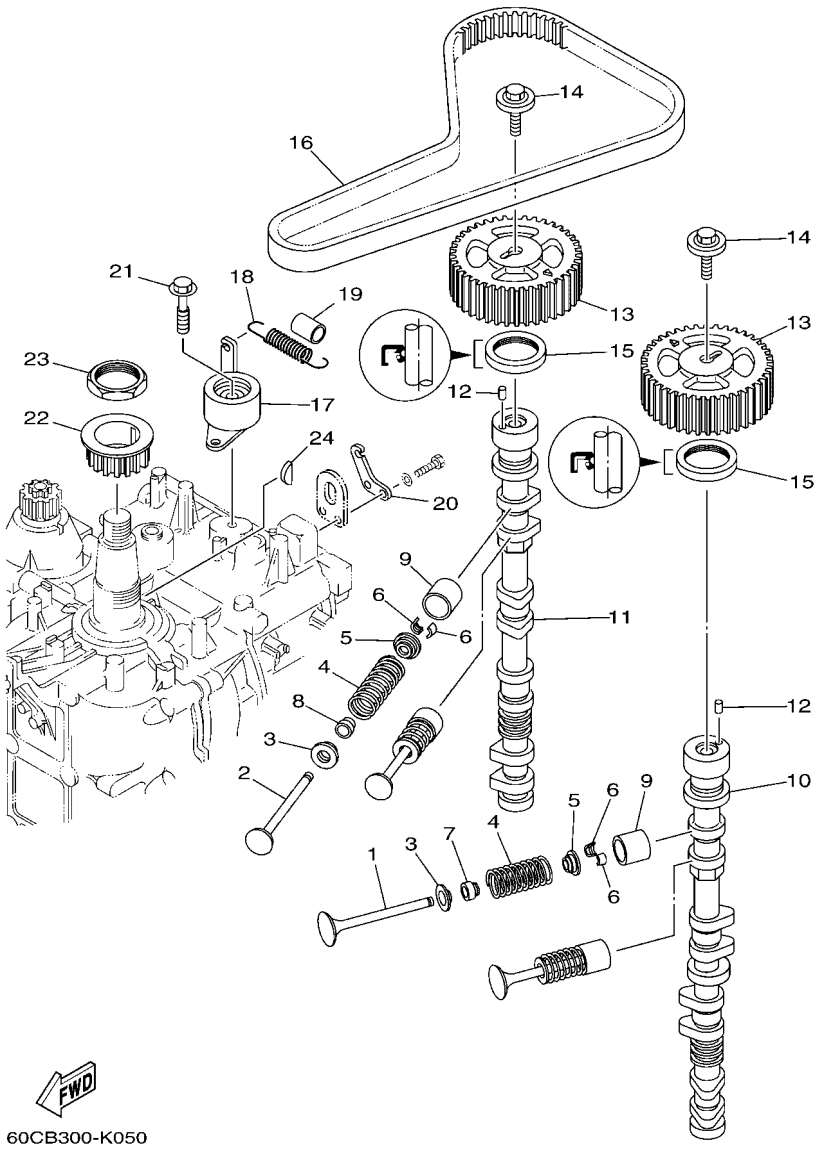

FIG. 6 VALVE — VALVULA

REF. NO.	PART NO. CODIGO Nº	DESCRIPTION DESCRIPCION	60CN					REMARKS OBSERVACIONES
1	6D8–12111–00	VALVE, INTAKE VALVULA DE ADMISION	8					
2	6D8–12121–10	VALVE, EXHAUST VALVULA DE ESCAPE	8					
3	6D8–12116–00	SEAT, VALVE SPRING ASIENTO RESORTE DE VALVULA	16					
4	6D8–12113–00	SPRING, VALVE INNER RESORTE VALVULA INTERNA	16					
5	26H–12117–00	RETAINER, VALVE SPRING RETEN RESORTE DE VALVULA	16					
6	4G0–12118–00	COTTER, VALVE SEGURO DE VALVULA	32					
7	K0A–A3721–00	SEAL, VALVE STEM SELLO DE ACEITE VALVULA	8					
8	K0A–A3722–00	SEAL, VALVE STEM 2 SELLO DE ACEITE VALVULA 2	8					
9	6D8–12153–00	LIFTER, VALVE (12) LEVANTADOR DE VALVULA (12)	16					UR UR
	6D8–12153–10	LIFTER, VALVE (14) LEVANTADOR DE VALVULA (14)	16					UR UR
	6D8–12153–20	LIFTER, VALVE (16) LEVANTADOR DE VALVULA (16)	16					UR UR
	6D8–12153–30	LIFTER, VALVE (18) LEVANTADOR DE VALVULA (18)	16					UR UR
	6D8–12153–40	LIFTER, VALVE (20) LEVANTADOR DE VALVULA (20)	16					UR UR
	6D8–12153–50	LIFTER, VALVE (22) LEVANTADOR DE VALVULA (22)	16					UR UR
	6D8–12153–60	LIFTER, VALVE (24) LEVANTADOR DE VALVULA (24)	16					UR UR
	6D8–12153–70	LIFTER, VALVE (26) LEVANTADOR DE VALVULA (26)	16					UR UR
	6D8–12153–80	LIFTER, VALVE (28) LEVANTADOR DE VALVULA (28)	16					UR UR
	6D8–12153–90	LIFTER, VALVE (30) LEVANTADOR DE VALVULA (30)	16					UR UR
	6D8–12153–A0	LIFTER, VALVE (32) LEVANTADOR DE VALVULA (32)	16					UR UR
	6D8–12153–B0	LIFTER, VALVE (34) LEVANTADOR DE VALVULA (34)	16					UR UR
	6D8–12153–C0	LIFTER, VALVE (36) LEVANTADOR DE VALVULA (36)	16					UR UR
	6D8–12153–D0	LIFTER, VALVE (38) LEVANTADOR DE VALVULA (38)	16					UR UR
	6D8–12153–E0	LIFTER, VALVE (40) LEVANTADOR DE VALVULA (40)	16					UR UR
	6D8–12153–F0	LIFTER, VALVE (42) LEVANTADOR DE VALVULA (42)	16					UR UR
	6D8–12153–G0	LIFTER, VALVE (44) LEVANTADOR DE VALVULA (44)	16					UR UR
	6D8–12153–H0	LIFTER, VALVE (46) LEVANTADOR DE VALVULA (46)	16					UR UR
	6D8–12153–J0	LIFTER, VALVE (48) LEVANTADOR DE VALVULA (48)	16					UR UR

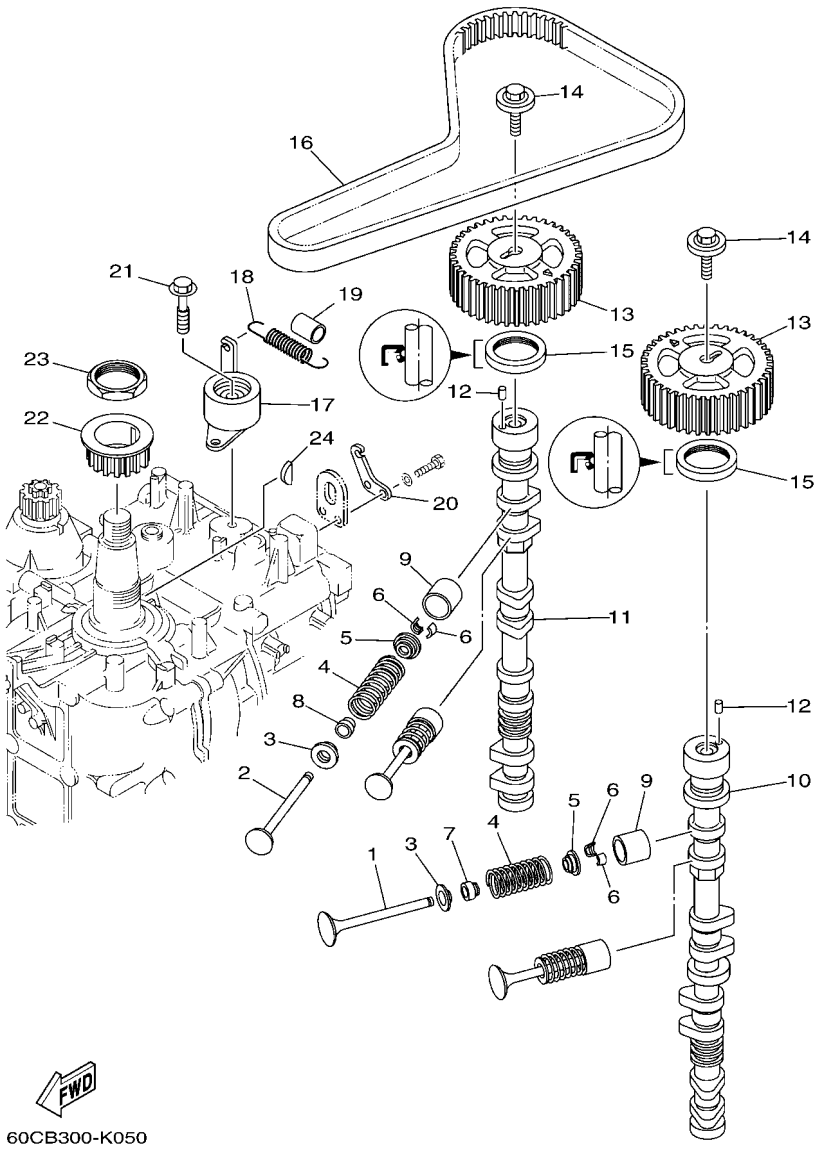

60CB300-K050

FIG. 6 VALVE — VALVULA

REF. NO.	PART NO. CODIGO Nº	DESCRIPTION DESCRIPCION	60CN					REMARKS OBSERVACIONES
9	6D8–12153–K0	LIFTER, VALVE (50) LEVANTADOR DE VALVULA (50)	16					UR UR
	6D8–12153–L0	LIFTER, VALVE (52) LEVANTADOR DE VALVULA (52)	16					UR UR
	6D8–12153–M0	LIFTER, VALVE (54) LEVANTADOR DE VALVULA (54)	16					UR UR
	6D8–12153–N0	LIFTER, VALVE (56) LEVANTADOR DE VALVULA (56)	16					UR UR
	6D8–12153–P0	LIFTER, VALVE (58) LEVANTADOR DE VALVULA (58)	16					UR UR
	6D8–12153–R0	LIFTER, VALVE (60) LEVANTADOR DE VALVULA (60)	16					UR UR
	6D8–12153–S0	LIFTER, VALVE (62) LEVANTADOR DE VALVULA (62)	16					UR UR
	6D8–12153–T0	LIFTER, VALVE (64) LEVANTADOR DE VALVULA (64)	16					UR UR
	6D8–12153–U0	LIFTER, VALVE (66) LEVANTADOR DE VALVULA (66)	16					UR UR
	6D8–12153–V0	LIFTER, VALVE (68) LEVANTADOR DE VALVULA (68)	16					UR UR
10	6D9–12171–00	CAMSHAFT 1 ARBOL DE LEVAS 1	1					
11	6D8–12181–00	CAMSHAFT 2 ARBOL DE LEVAS 2	1					
12	93605–10108	PIN, DOWEL PASADOR DE CLAVIJA	2					
13	67F–11537–00	GEAR, DRIVEN ENGRANAJE TRACCION	2					
14	90119–10050	BOLT, WITH WASHER TORNILLO CON ARANDELA	2					
15	93102–38008	OIL SEAL SELLO ACEITE	2					
16	67F–46241–00	BELT CORREA	1					
17	67F–11590–00	TENSIONER ASSY TENSOR COMPLET	1					
18	90506–16M39	SPRING, TENSION RESORTE DE TENSION	1					
19	90445–15M03	HOSE (L23) TUBO (L23)	1					
20	67F–11595–00	PLATE,VALVE PLACA DE VALVULA	1					
21	90119–10M72	BOLT, WITH WASHER TORNILLO CON ARANDELA	1					
22	6D8–11536–01	GEAR, DRIVE ENGRANAJE TRACCION	1					
23	90170–40008	NUT TUERCA	1					
24	90280–04008	KEY, WOODRUFF CUNA WOODRUFF	1					

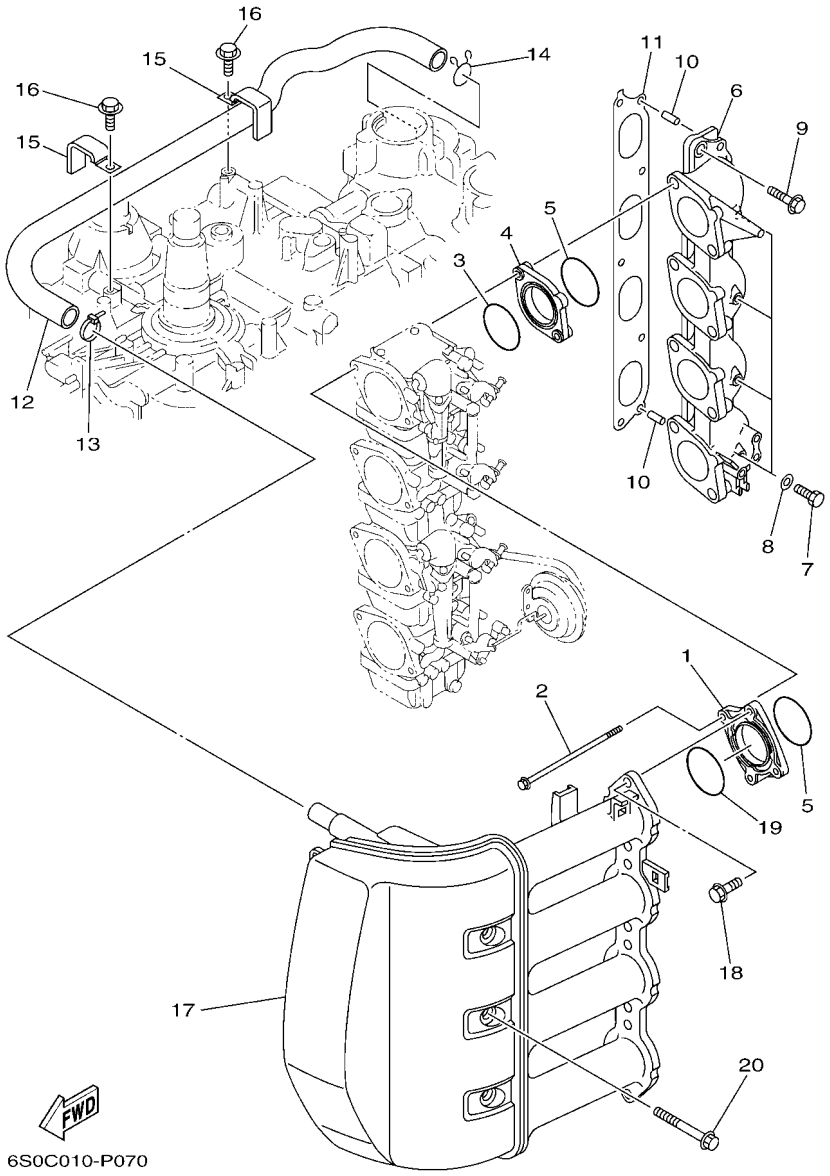

FIG. 7 INTAKE — ADMISION

REF. NO.	PART NO. CODIGO Nº	DESCRIPTION DESCRIPCION	60CN					REMARKS OBSERVACIONES
1	67F–14243–00	PLATE PLACA	4					
2	67F–14216–00	BOLT PERNO	8					
3	67F–14239–00	SEAL SELLO	4					
4	67F–14271–00	INSULATOR AISLANTE	4					
5	93210–40M10	O-RING ANILLO O	8					
6	67F–13641–00–94	MANIFOLD, INTAKE 1 CONECTOR DE ADMISSION 1	1					
7	97D95–06010	BOLT, HEXAGON DEEP RECESS TORNILLO HEXAGONAL	4					
8	90430–06014	GASKET JUNTA	4					
9	97E75–08535	BOLT, HEXAGON W/W DEEP RECESS TORNILLO HEXAGONAL CON RONDONA	5					
10	91690–50014	PIN, SPRING PASADOR DE RESORTE	2					
11	67F–13645–00	GASKET, MANIFOLD 1 EMPAQUE	1					
12	67F–15373–00	PIPE, BREATHER MANGUELA DE RESPIRADERO	1					
13	90465–11M59	CLAMP BRIDA	1					
14	90467–20M15	CLIP PRESILLA	1					
15	90465–12M03	CLAMP BRIDA	2					
16	97E95–06512	BOLT, HEXAGON W/W DEEP RECESS TORNILLO HEXAGONAL CON RONDONA	2					
17	67F–14440–00	SILENCER ASSY, INTAKE SILENCIADOR COMPL DE ADMISION	1					
18	90119–06283	BOLT, WITH WASHER TORNILLO CON ARANDELA	8					
19	93210–41MJ2	O-RING ANILLO O	4					
20	90119–08M59	BOLT, WITH WASHER TORNILLO CON ARANDELA	3					

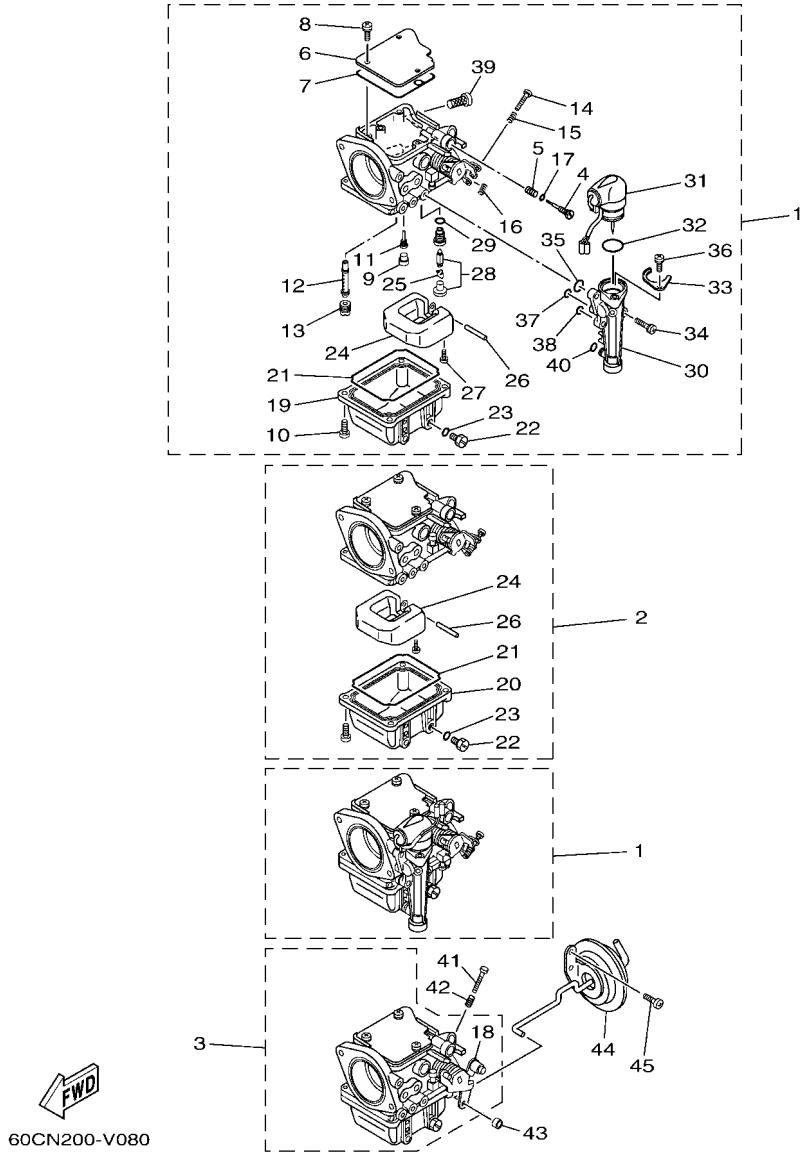

FIG. 8 CARBURETOR 1 — CARBURADOR 1

REF. NO.	PART NO. CODIGO Nº	DESCRIPTION DESCRIPCION	60CN					REMARKS OBSERVACIONES
1	60C–14901–03	CARBURETOR ASSY 1 CARBURADOR COMPLETO 1	2					#1,3 #1,3
2	60C–14902–03	CARBURETOR ASSY 2 CARBURADOR COMPLETO 2	1					#2 #2
3	60C–14904–03	CARBURETOR ASSY 4 CARBURADOR COMPLETO 4	1					#4 #4
4	67F–14923–00	.SCREW, PILOT .TORNILLO DE AJUSTE	4					
5	697–14555–00	.SPRING .RESORTE	4					
6	67F–14146–00	.PLATE .PLACA SOPORTE	4					
7	67F–14147–00	.GASKET .EMPAQUE	4					
8	65L–14565–00	.SCREW .TORNILLO	12					
9	679–14966–00	.RUBBER CAP .TAPA	4					
10	97980–04114	.SCREW, WITH WASHER .TORNILLO, CON ARANDELA	16					
11	67F–14948–04	.JET (#42) .INYECTOR (#42)	4					
12	67F–14947–00	.JET, NEEDLE .INYECTOR DE AGUJA	4					
13	67F–14943–83	.JET, MAIN (#128) .INYECTOR PRINCIPAL (#128)	4					
14	67F–14567–00	.SCREW .TORNILLO	3					#1,2,3 #1,2,3
15	67F–14555–00	.SPRING .RESORTE	3					#1,2,3 #1,2,3
16	67F–14556–00	.SPRING .RESORTE	3					#1,2,3 #1,2,3
17	67F–14397–00	.O-RING .ANILLO O	4					
18	6H2–14578–00	.COLLAR .COLLAR	1					#4 #4
19	67F–14980–01	.BODY, FLOAT CHAMBER .CUERPO CAMARA DE BOIA	2					#1,3 #1,3
20	67F–14980–11	.BODY, FLOAT CHAMBER .CUERPO CAMARA DE BOIA	2					#2,4 #2,4
21	67F–14984–00	.GASKET, FLOAT CHAMBER .EMPAQUE CAMARA DE BOIA	4					
22	6H3–14992–00	.SCREW, DRAIN .TORNILLO,SEGURO	4					
23	93210–04230	.O-RING .ANILLO O	4					
24	6H4–14985–01	.FLOAT .BOIA	4					
25	67F–14159–00	.CLIP .PRESILLA	4					
26	6H4–14548–00	.PIN, FLOAT ARM .PASADOR DE BRAZO DE BOIA	4					
27	98580–04008	.SCREW, PAN HEAD .TORNILLO DE CABEZA CRUZADA	4					

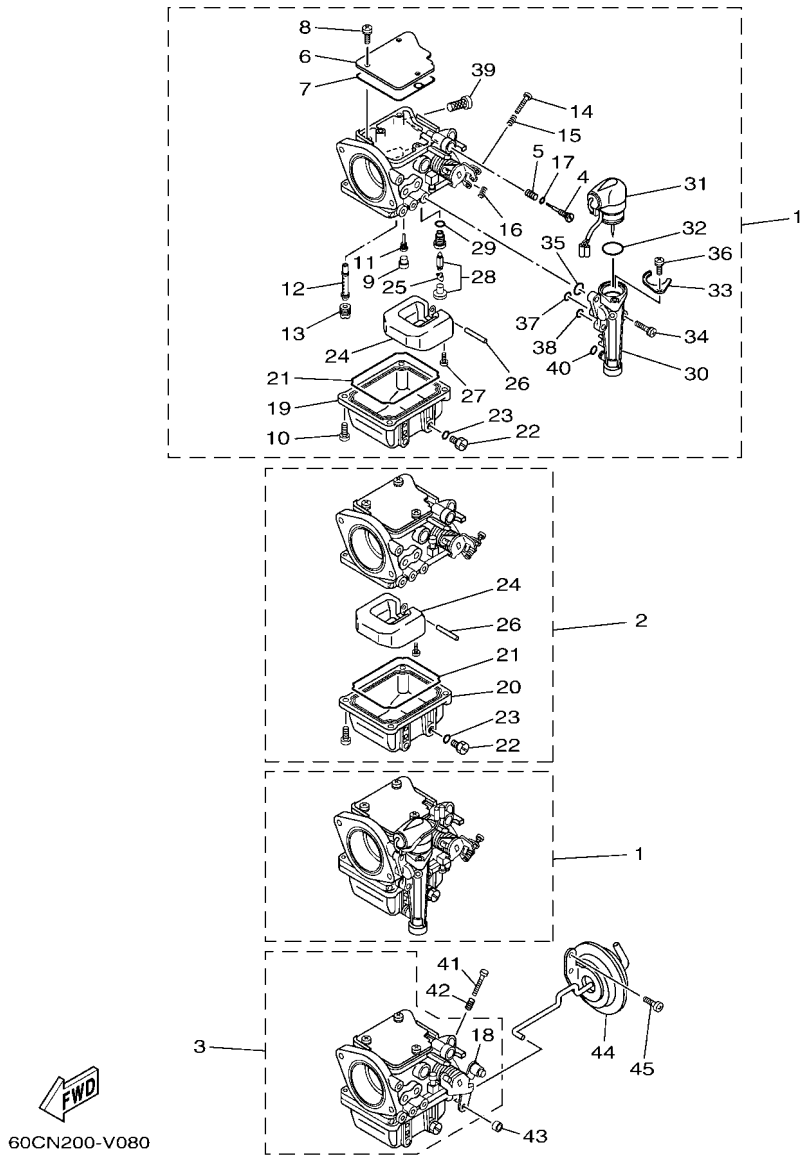

FIG. 8 CARBURETOR 1 — CARBURADOR 1

REF. NO.	PART NO. CODIGO Nº	DESCRIPTION DESCRIPCION	60CN					REMARKS OBSERVACIONES
28	6AH–14546–00	.VALVE, NEEDLE .VALVULA DE AGUJA	4					
29	93210–04228	.O-RING .ANILLO O	4					
30	67F–14378–00	.BODY, STARTER .CUERPO CAMARA DE ARRANQUE	2					#1,3 #1,3
31	67F–14380–02	.PRIME STARTER ASSY .JUEGO DE VALVULA DE ARRANQUE	2					#1,3 #1,3
32	5ML–E4854–00	.O-RING .ANILLO-O	2					#1,3 #1,3
33	67F–14178–00	.PLATE, STARTER LEVER .PLACA DE PALANCA DE ARRANQUE	2					#1,3 #1,3
34	67F–14592–00	.SCREW .TORNILLO	6					#1,3 #1,3
35	67F–14398–00	.O-RING .ANILLO O	2					#1,3 #1,3
36	67F–14565–00	.SCREW .TORNILLO	2					#1,3 #1,3
37	67F–14398–10	.O-RING .ANILLO O	2					#1,3 #1,3
38	67F–14398–20	.O-RING .ANILLO O	2					#1,3 #1,3
39	67F–14371–01	.ELEMENT, FILTER .ELEMENTO DEL FILTRO	4					
40	67F–14398–30	.O-RING .ANILLO O	2					#1,3 #1,3
41	63V–14523–00	SCREW, STOP TORNILLO DE TOPE	1					#4 #4
42	90501–10326	SPRING, COMPRESSION RESORTE DE COMPRESION	1					#4 #4
43	67F–14998–00	BUSH BUJE	1					#4 #4
44	67F–14369–00	DIAPHRAGM ASSY 2 DIAFRAGMA COMPLETO 2	1					#4 #4
45	67F–14325–00	SCREW, PAN HEAD TORNILLO CABEZA REDONDA	2					#4 #4

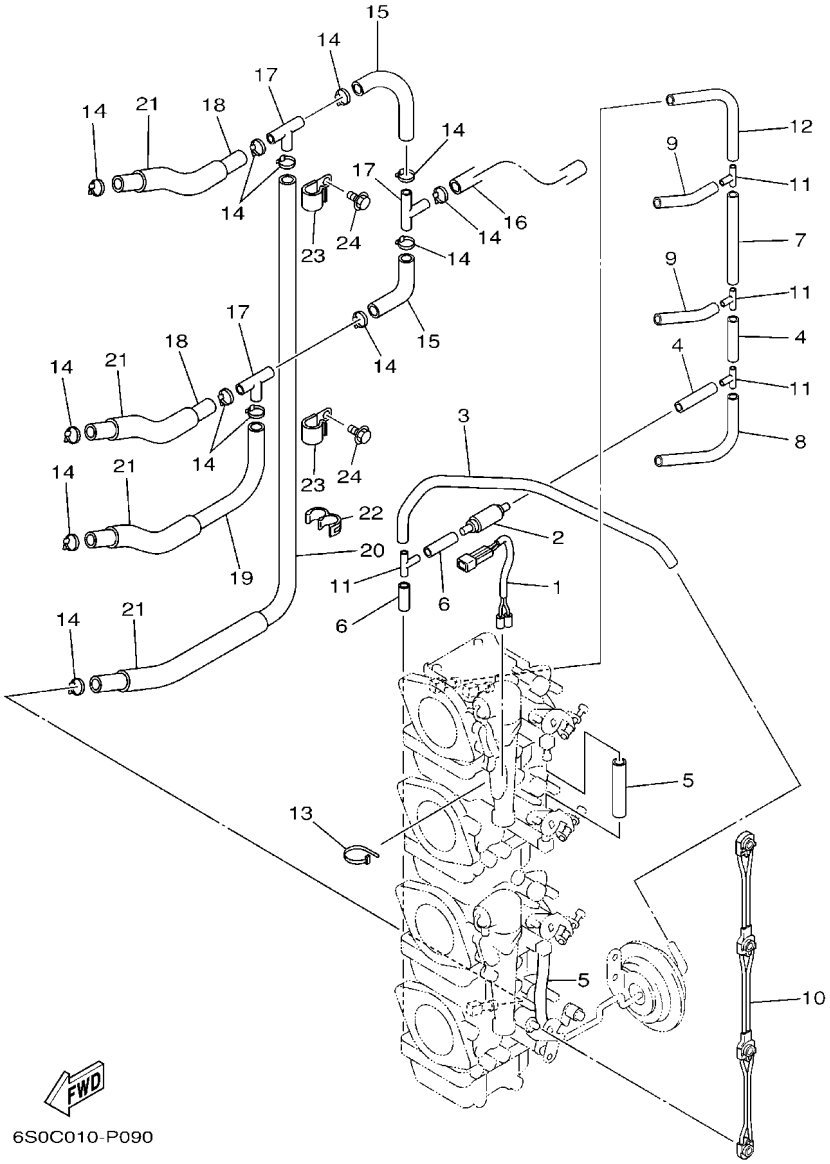

FIG. 9 CARBURETOR 2 — CARBURADOR 2

REF. NO.	PART NO. CODIGO Nº	DESCRIPTION DESCRIPCION	60CN					REMARKS OBSERVACIONES
1	67F–1412A–00	WIRE HARNESS ASSY CONJUNTO DE CABLES	1					
2	67F–13183–00	VALVE, CHECK VALVULA DE RETENTION	1					
3	67F–14349–00	PIPE TUBO	1					
4	67F–14349–10	PIPE TUBO	2					
5	67F–14349–20	PIPE TUBO	2					
6	67F–14349–30	PIPE TUBO	2					
7	67F–14349–40	PIPE TUBO	1					
8	67F–14349–50	PIPE TUBO	1					
9	67F–14349–60	PIPE TUBO	2					
10	67F–14585–00	ROD, CHOKE VARILLA DE CEBADOR	1					
11	67F–14189–00	CONNECTOR CONECTOR	4					
12	67F–14349–70	PIPE TUBO	1					
13	90465–11M59	CLAMP BRIDA	1					
14	3TJ–14937–40	CLIP PRESILLA	13					
15	60C–14294–00	HOSE MANGUERA	2					
16	60C–14298–00	PIPE TUBO	1					
17	688–24378–00	PIPE, JOINT 3 TUBO DE UNION 3	3					
18	90445–10M16	HOSE (L120) TUBO (L120)	2					
19	90445–10MG6	HOSE (L180) TUBO (L180)	1					
20	90445–10MG7	HOSE (L350) TUBO (L350)	1					
21	90445–16M07	HOSE (L80) TUBO (L80)	4					
22	90464–10M57	CLAMP BRIDA	1					
23	90465–08M83	CLAMP BRIDA	2					
24	97E95–06512	BOLT, HEXAGON W/W DEEP RECESS TORNILLO HEXAGONAL CON RONDONA	2					

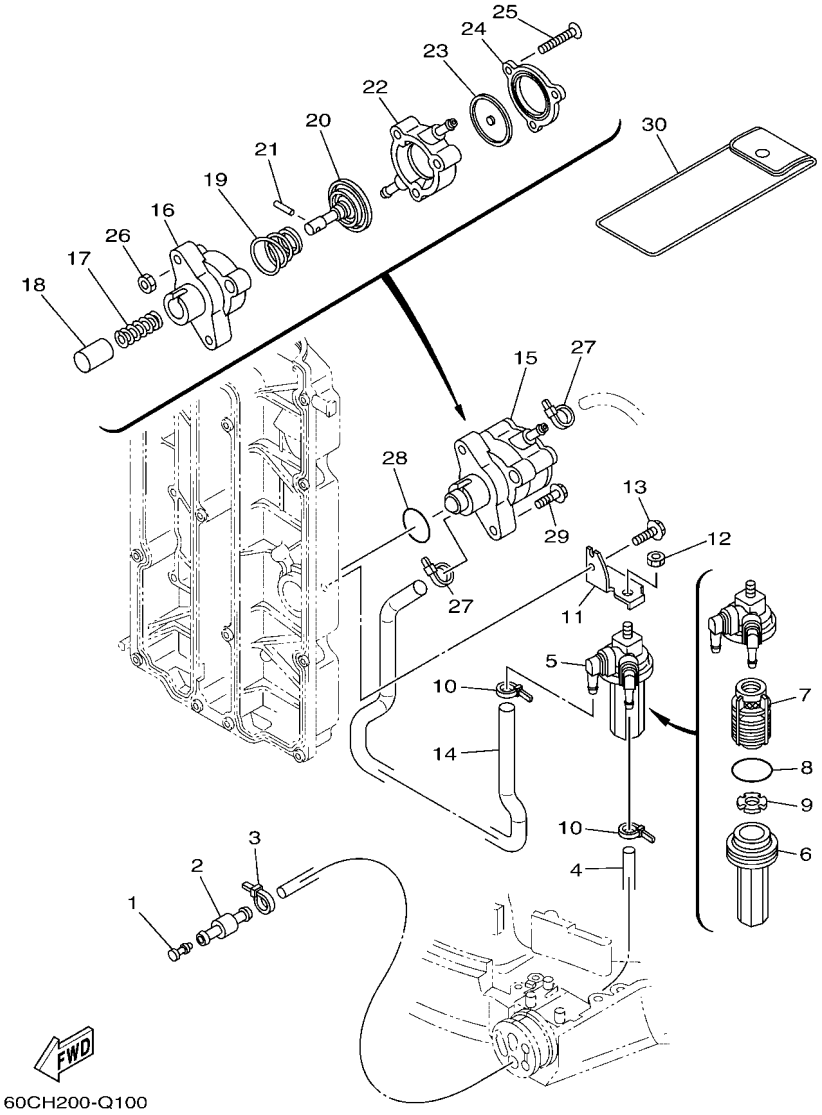

FIG. 10 FUEL 1 — COMBUSTIBLE 1

REF. NO.	PART NO. CODIGO Nº	DESCRIPTION DESCRIPCION	60CN					REMARKS OBSERVACIONES
1	689–85547–01	DAMPER AMORTIGUADOR	1					
2	6R3–24377–00	PIPE, JOINT 2 TUBO DE UNION 2	1					
3	90465–11M10	CLAMP BRIDA	1					
4	90445–13M27	HOSE (L950) TUBO (L950)	1					
5	60C–24560–01	FILTER ASSY FILTRO COMPLETO	1					
6	68V–24521–01	.CUP, FILTER .COPA DE FILTRO	1					
7	61N–24563–10	.ELEMENT, FILTER .ELEMENTO DEL FILTRO	1					
8	93210–32738	.O-RING .ANILLO O	1					
9	68V–24469–01	.FLOAT, WATER LEVEL .BOIA	1					
10	90465–11M10	CLAMP BRIDA	2					
11	60C–24566–00	BRACKET, FILTER SOPORTE DEL FILTRO	1					
12	95380–08600	NUT TUERCA	1					
13	97E95–06516	BOLT, HEXAGON W/W DEEP RECESS TORNILLO HEXAGONAL CON RONDONA	1					
14	6D8–24311–00	PIPE, FUEL 1 TUBO DE COMBUSTIBLE 1	1					
15	6D8–24410–10	FUEL PUMP ASSY BOMBA DE COMBUSTIBLE COMPLETA	1					
16	68V–24412–00	.BODY 1 .CUERPO 1	1					
17	68V–24454–00	.SPRING .RESORTE	1					
18	63P–13131–00	.PLUNGER .ESPACIADOR	1					
19	68V–24423–00	.SPRING, DIAPHRAGM .RESORTE DE DIAFRAGMA	1					
20	68V–24411–00	.DIAPHRAGM .DIAFRAGMA	1					
21	68V–24374–00	.PIN .PASADOR	1					
22	68V–24413–10	.BODY 2 .CUERPO 2	1					
23	68V–24471–10	.DIAPHRAGM .DIAFRAGMA	1					
24	6D8–24414–00	.BODY 3 .CUERPO 3	1					
25	68V–24444–00	.SCREW .TORNILLO	3					
26	68V–24149–00	.NUT .TUERCA	3					
27	90465–11M10	CLAMP BRIDA	2					

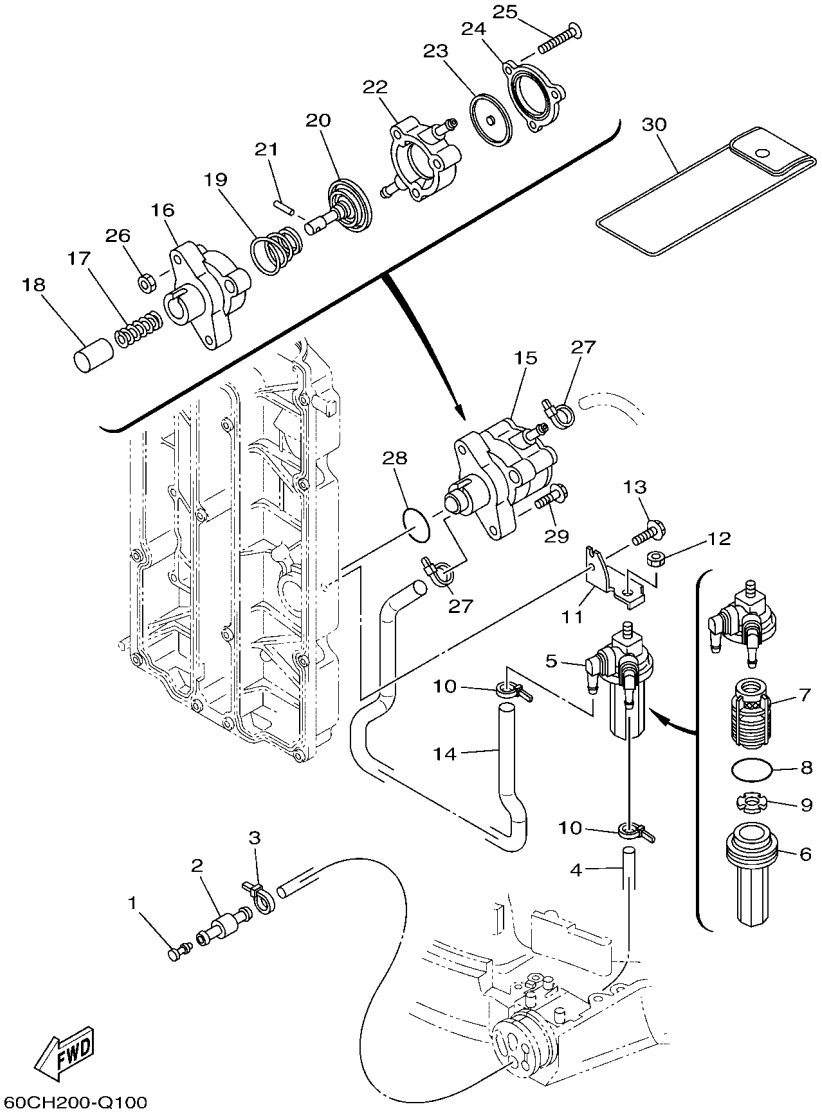

FIG. 10 FUEL 1 — COMBUSTIBLE 1

REF. NO.	PART NO. CODIGO Nº	DESCRIPTION DESCRIPCION	60CN					REMARKS OBSERVACIONES
28	93210–30682	O-RING ANILLO O	1					
29	90119–06312	BOLT, WITH WASHER TORNILLO CON ARANDELA	2					
30	67F–28100–03	TOOL KIT JUEGO DE HERRAMIENTAS	1					UR UR
	67F–28100–12	TOOL KIT JUEGO DE HERRAMIENTAS	1					UR UR

FIG. 11 FUEL 2 — COMBUSTIBLE 2

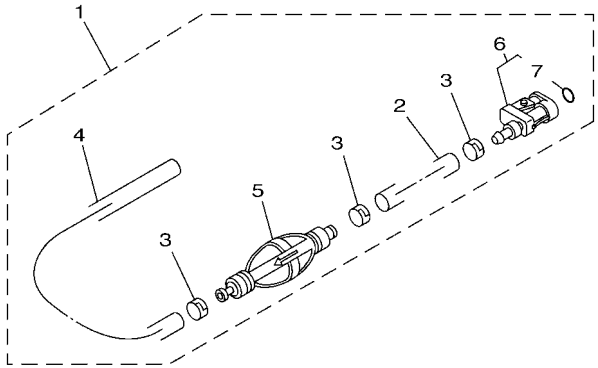

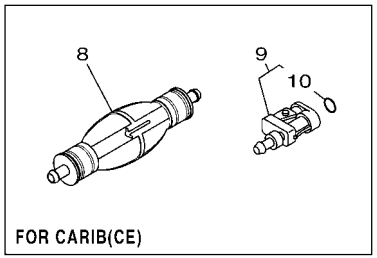

60CC200-L100

REF. NO.	PART NO. CODIGO Nº	DESCRIPTION DESCRIPCION	60CN					REMARKS OBSERVACIONES
1	6Y2–24306–45	FUEL PIPE COMP. 1 TUBO COMBUST. COMPL 1	1					AP EXCEPT CAR(CE) AP EXCEPT CAR(CE)
2	90445–13M01	.HOSE (L2050) .MANGUERA (L2050)	1					
3	6E5–24351–51	.BAND 1 .ABRAZADERA 1	3					
4	90445–13M35	.HOSE (L250) .MANGUERA (L250)	1					
5	6Y2–24360–60	.PRIMER PUMP ASSY .SOPORTE BOMBA	1					
6	6Y2–24305–06	.FUEL PIPE JOINT COMP. 2 .CONECTOR MANGUERA COMBUST. 2	1					
7	93210–08287	..O-RING ..ANILLO O	1					
8	6Y2–24360–60	PRIMER PUMP ASSY SOPORTE BOMBA	1					AP FOR CAR(CE) AP FOR CAR(CE)
9	6Y2–24305–06	FUEL PIPE JOINT COMP. 2 CONECTOR MANGUERA COMBUST. 2	1					AP FOR CAR(CE) AP FOR CAR(CE)
10	93210–08287	.O-RING .ANILLO O	1					

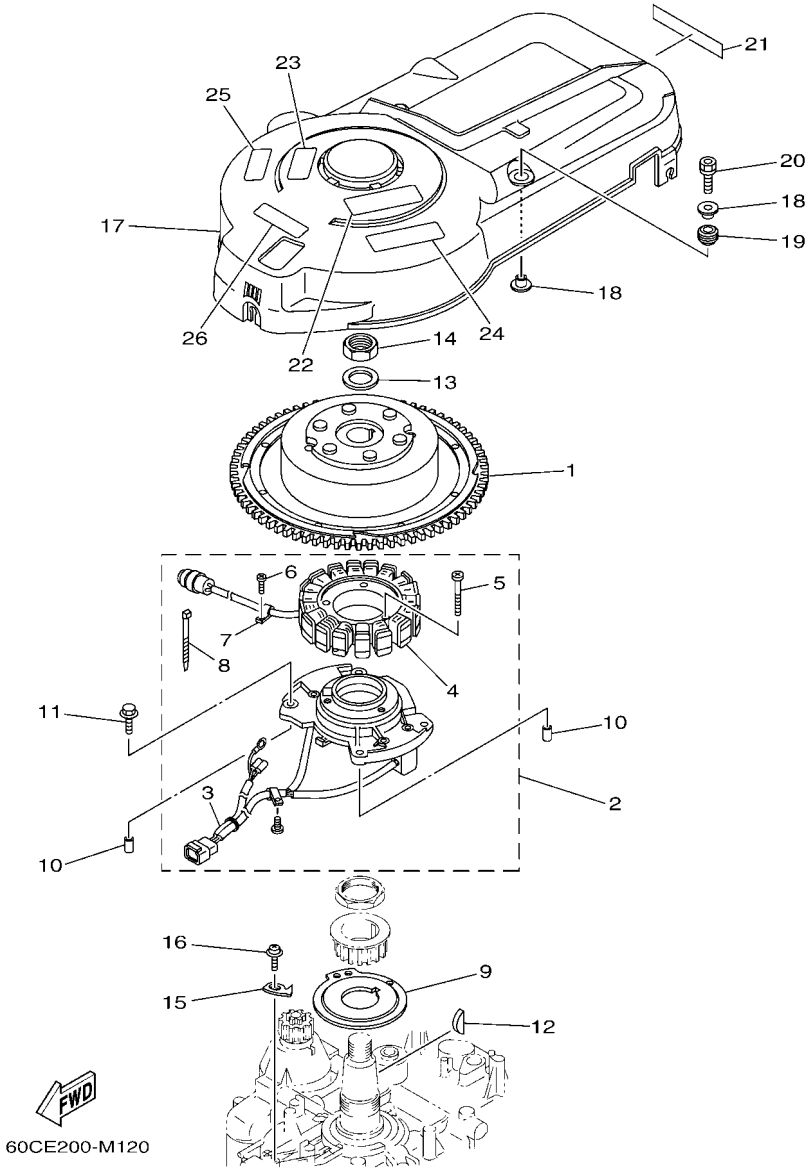

FIG. 12 GENERATOR GENERADOR

REF. NO.	PART NO. CODIGO Nº	DESCRIPTION DESCRIPCION	60CN					REMARKS OBSERVACIONES
1	67F–85550–01	ROTOR ASSY ROTOR COMPLETO	1					
2	67F–85560–01	BASE ASSY CONJUNTO BASE	1					
3	67F–85580–00	.COIL, PULSER .BOBINA DE PULSACION	1					
4	67F–85510–01	.STATOR ASSY .ESTATOR COMPLETO	1					
5	63D–81345–20	.SCREW, WITH WASHER (M6X30) .TORNILLO, CON ARANDELA (M6X30)	3					
6	97607–04110	.SCREW, WITH WASHER .TORNILLO CAB CON PLANA C/ARAN	1					
7	445–81328–20	.CLAMP .GRAMPA	1					
8	66T–81328–00	.CLAMP .GRAMPA	1					
9	67F–81673–10	ROTOR ROTOR	1					
10	99530–08012	PIN, DOWEL PASADOR, DE ESPIGA	2					
11	97E95–06630	BOLT, HEXAGON W/W DEEP RECESS TORNILLO HEXAGONAL CON RONDONA	4					
12	90280–05015	KEY, WOODRUFF CUNA WOODRUFF	1					
13	90201–24014	WASHER, PLATE ARANDELA PLANA	1					
14	90179–24002	NUT TUERCA	1					
15	6D8–81332–00	PLATE, TIMING PLACA REGULADOR DE TIEMPO	1					
16	97985–06210	SCREW, WITH WASHER TORNILLO, CON ARANDELA	1					
17	67F–81337–01	COVER, FLYWHEEL CUBIERTA DE VOLANTE	1					
18	90387–06M71	COLLAR ESPACIADOR	4					
19	90480–15M31	GROMMET TAPON	2					
20	90119–06M92	BOLT, WITH WASHER TORNILLO CON ARANDELA	2					
21	68V–13437–63	MARK, CAUTION MARKER	1					
22	6EE–81995–40	LABEL, WARNING ETIQUETA DE PRECAUCION	1					
23	6EE–81995–50	LABEL, WARNING ETIQUETA DE PRECAUCION	1					FOR CAR(CE) FOR CAR(CE)
24	6EE–81994–40	LABEL, SAFETY ETIQUETA DE SEGURIDAD	1					
25	6EE–81994–50	LABEL, SAFETY ETIQUETA DE SEGURIDAD	1					FOR CAR(CE) FOR CAR(CE)
26	6AG–81996–00	MARK MARCA	1					FOR CAR(CE) FOR CAR(CE)

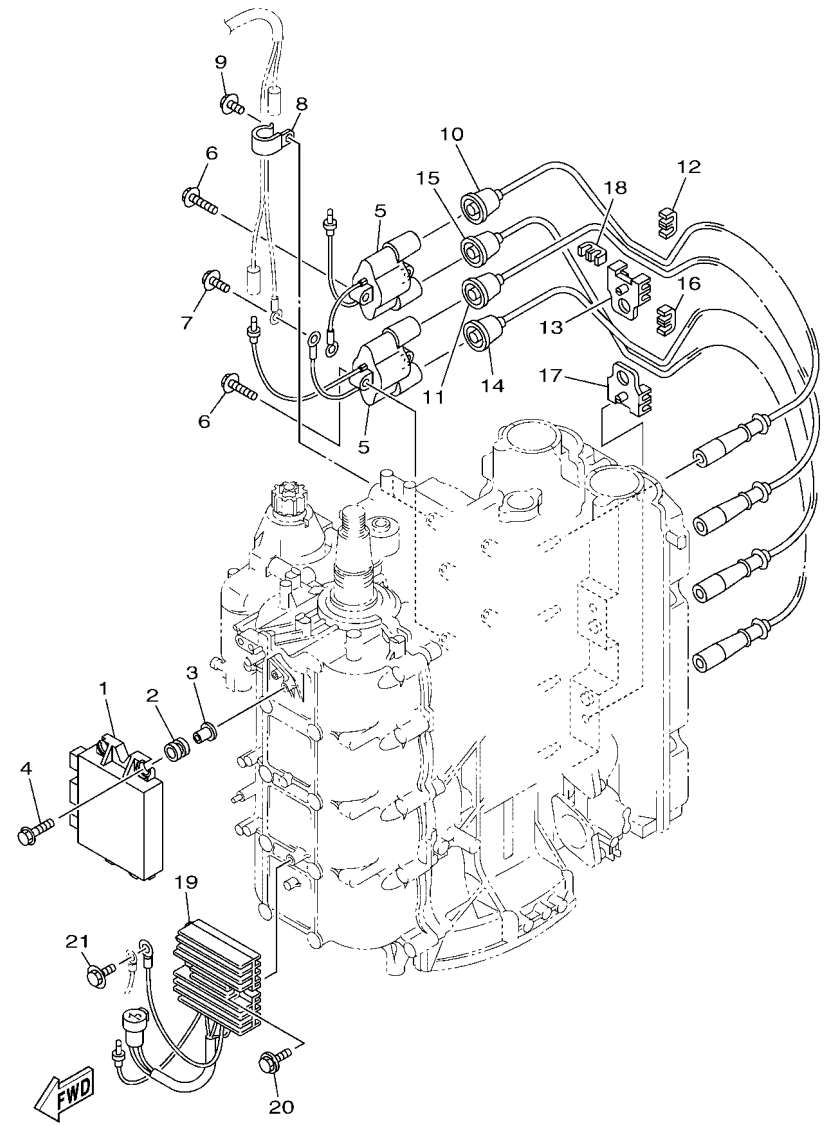

60CJ200-R130

FIG. 13 ELECTRICAL 1 — EQUIPO ELECTRICO 1

REF. NO.	PART NO. CODIGO Nº	DESCRIPTION DESCRIPCION	60CN					REMARKS OBSERVACIONES
1	67F–85540–03	C.D.I. UNIT ASSY UNIDAD C.D.I. COMPLETA	1					
2	68V–82317–01	DAMPER, IGNITION COIL AMORTIGUADOR BOBINA ENCENDIDO	4					
3	90387–06119	COLLAR ESPACIADOR	4					
4	90119–06289	BOLT, WITH WASHER TORNILLO CON ARANDELA	4					
5	67F–85570–00	IGNITION COIL ASSY BOBINA DE IGNICION COMPLETO	2					
6	97E95–06630	BOLT, HEXAGON W/W DEEP RECESS TORNILLO HEXAGONAL CON RONDONA	4					
7	97E95–06620	BOLT, HEXAGON W/W DEEP RECESS TORNILLO HEXAGONAL CON RONDONA	1					
8	90465–06M86	CLAMP BRIDA	1					
9	97E95–06512	BOLT, HEXAGON W/W DEEP RECESS TORNILLO HEXAGONAL CON RONDONA	1					
10	67F–82341–00	CORD, HIGH TENSION 1 CABLE DE ALTA TENSION 1	1					#1 #1
11	67F–82342–00	CORD, HIGH TENSION 2 CABLE DE ALTA TENSION 2	1					#2 #2
12	67F–82361–00	CLAMP, CORD GRAMPA DE CABLE	1					
13	67F–82362–00	CLAMP, CORD 2 GRAMPA DE CABLE 2	1					
14	67F–82343–00	CORD, HIGH TENSION 3 CABLE DE ALTA TENSION 3	1					#3 #3
15	67F–82344–00	CORD, HIGH TENSION 4 CABLE DE ALTA TENSION 4	1					#4 #4
16	67F–82361–00	CLAMP, CORD GRAMPA DE CABLE	1					
17	67F–82362–00	CLAMP, CORD 2 GRAMPA DE CABLE 2	1					
18	67F–82361–00	CLAMP, CORD GRAMPA DE CABLE	1					
19	67F–81960–12	RECTIFIER & REGULATOR ASSY RECTIFICADOR Y REGULADOR	1					
20	97E95–06625	BOLT, HEXAGON W/W DEEP RECESS TORNILLO HEXAGONAL CON RONDONA	2					
21	97E95–06616	BOLT, HEXAGON W/W DEEP RECESS TORNILLO HEXAGONAL CON RONDONA	1					

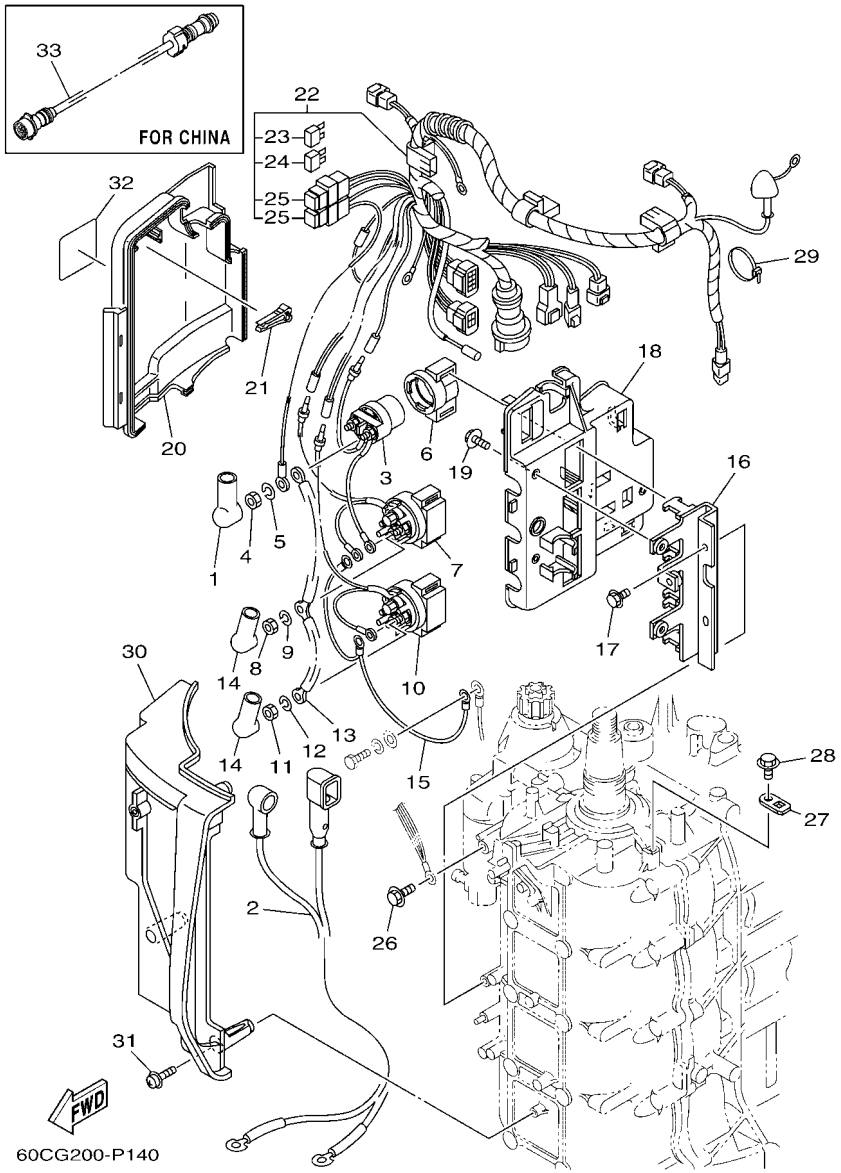

FIG. 14 ELECTRICAL 2 — EQUIPO ELECTRICO 2

REF. NO.	PART NO. CODIGO Nº	DESCRIPTION DESCRIPCION	60CN					REMARKS OBSERVACIONES
1	682–82119–01	COVER, LEAD WIRE CUBIERTA DE CABLE CONDUCTOR	2					
2	67F–82105–01	BATTERY CABLE CABLE DE BATERIA	1					
3	6G1–8194A–10	RELAY RELE	1					
4	90170–06M30	NUT TUERCA	2					
5	90204–06M00	WASHER, SPRING ARANDELA DE RESORTE	2					
6	6G1–81952–01	HOLDER, RELAY SOSTEN DE RELE	1					
7	6E5–8195B–01	RELAY ASSY RELE COMPLETO	1					
8	90170–06M30	NUT TUERCA	3					
9	90204–06M00	WASHER, SPRING ARANDELA DE RESORTE	3					
10	6E5–8195C–01	RELAY ASSY RELE COMPLETO	1					
11	90170–06M30	NUT TUERCA	3					
12	90204–06M00	WASHER, SPRING ARANDELA DE RESORTE	3					
13	66T–87149–00	CONNECTOR CONECTOR	1					
14	6G5–82119–00	COVER, LEAD WIRE CUBIERTA DE CABLE CONDUCTOR	2					
15	67F–82116–01	WIRE, MINUS LEAD CABLE CONDUCTOR NEGATIVO	1					
16	67F–81953–00	STAY, RELAY SOPORTE DE RELE	1					
17	97E95–06516	BOLT, HEXAGON W/W DEEP RECESS TORNILLO HEXAGONAL CON RONDONA	2					
18	67F–81948–01	BRACKET SOPORTE	1					
19	97E95–06516	BOLT, HEXAGON W/W DEEP RECESS TORNILLO HEXAGONAL CON RONDONA	3					
20	67F–81942–00	COVER CUBIERTA	1					
21	67F–2812A–00	PULLER, FUSE TIRADOR DE FUSIBLE	1					
22	60C–82590–31	WIRE HARNESS ASSY CONJUNTO DE CABLES	1					
23	67F–82151–00	.FUSE (20A) .FUSIBLE (20A)	2					
24	67F–82151–10	.FUSE (30A) .FUSIBLE (30A)	2					
25	67F–8215B–00	.CAP (BLACK) .TAPA (NEGRO)	2					
26	97E95–06616	BOLT, HEXAGON W/W DEEP RECESS TORNILLO HEXAGONAL CON RONDONA	1					
27	67F–82588–00	PLATE PLACA	3					

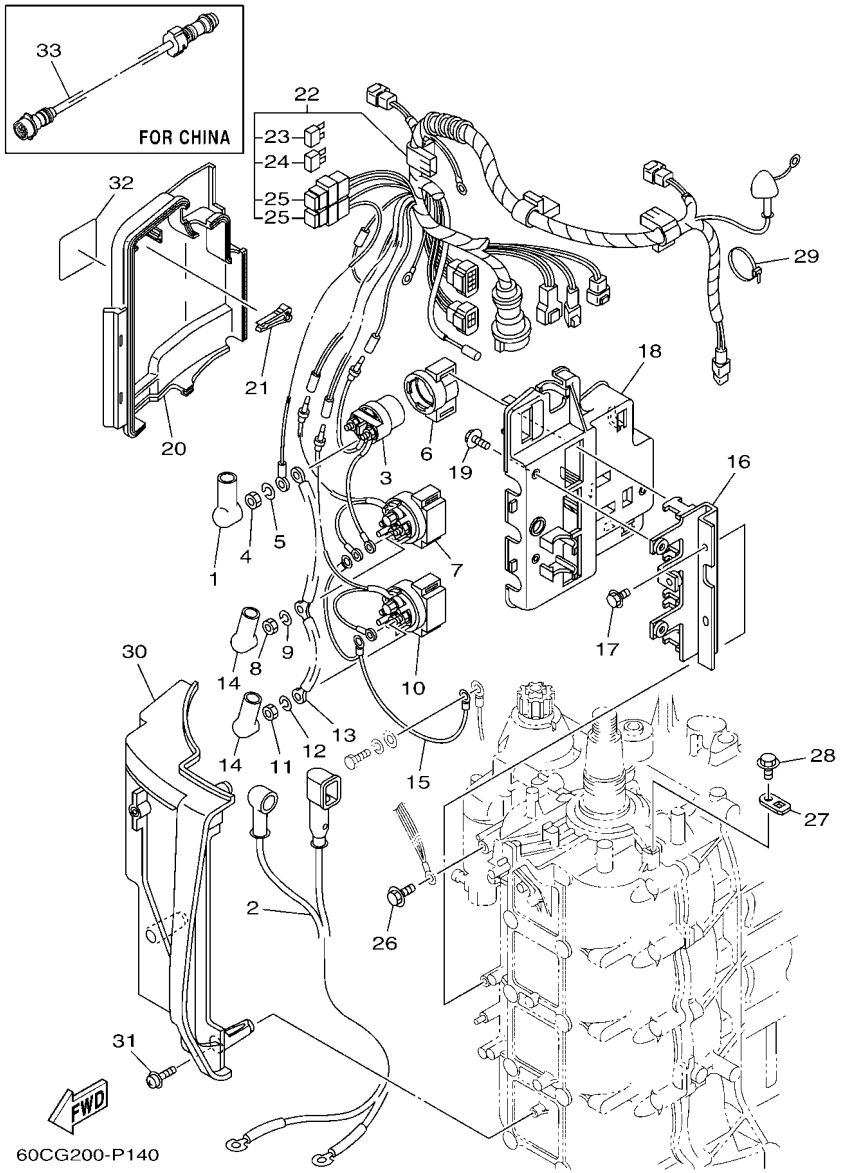

FIG. 14 ELECTRICAL 2 — EQUIPO ELECTRICO 2

REF. NO.	PART NO. CODIGO Nº	DESCRIPTION DESCRIPCION	60CN					REMARKS OBSERVACIONES
28	97E95–06512	BOLT, HEXAGON W/W DEEP RECESS TORNILLO HEXAGONAL CON RONDONA	3					
29	90465–13M11	CLAMP BRIDA	1					
30	67F–81916–02	COVER, TERMINAL CUBIERTA DE TERMINAL	1					
31	90159–06M29	SCREW, WITH WASHER TORNILLO CON VALONA	3					
32	67F–83626–00	MARK 6 MARCA 6	1					
33	688–8258A–10	EXTENSION, WIRE HARNESS (2M) EXTENSION, ARNES DE CABLES (2M	1					AP FOR CHN (10P) AP FOR CHN (10P)

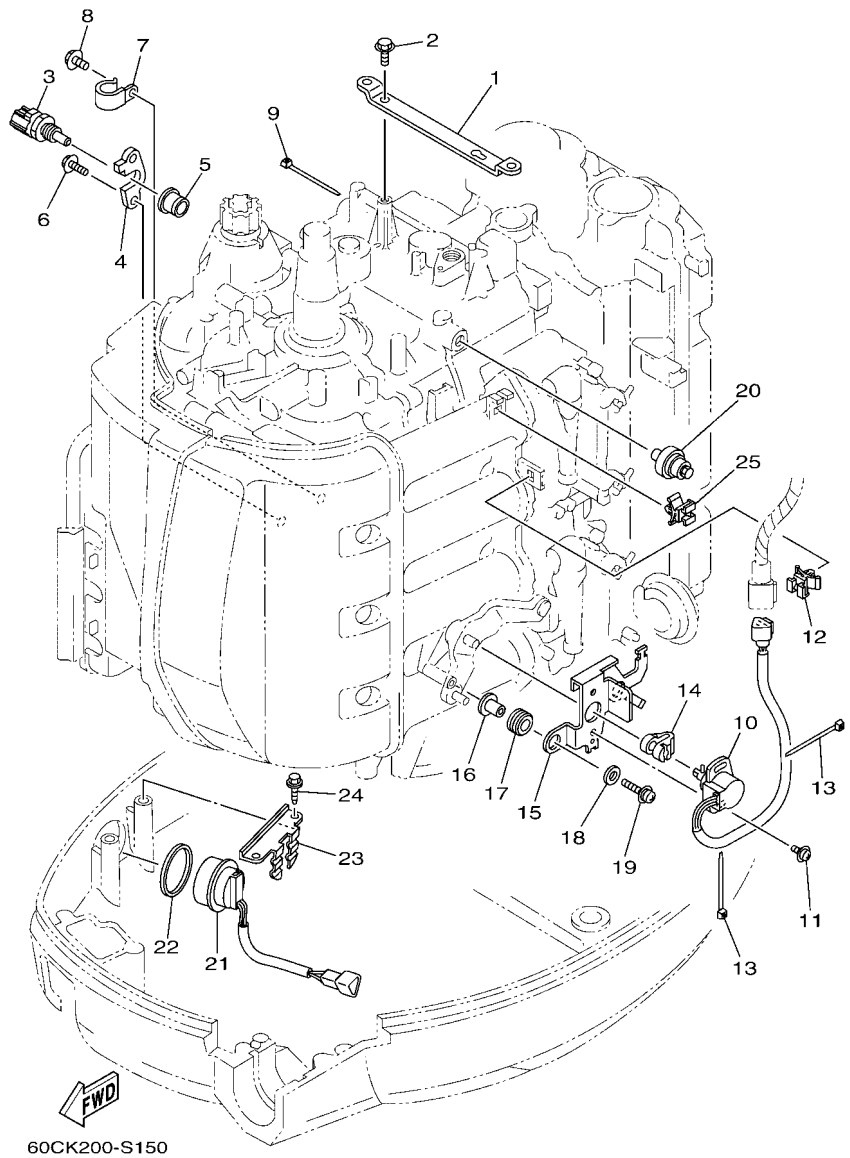

FIG. 15 ELECTRICAL 3 — EQUIPO ELECTRICO 3

REF. NO.	PART NO. CODIGO Nº	DESCRIPTION DESCRIPCION	60CN					REMARKS OBSERVACIONES
1	67F–8132G–01	PLATE PLACA	1					
2	97E95–06516	BOLT, HEXAGON W/W DEEP RECESS TORNILLO HEXAGONAL CON RONDONA	2					
3	6D8–85790–00	THERMOSENSOR ASSY TERMICA SENSORIO	1					
4	67F–85757–00	RETAINER SEGURO	1					
5	68V–85753–01	GASKET, SENDER UNIT EMPAQUE DE UNIDAD TRANSMISORA	1					
6	97E95–06516	BOLT, HEXAGON W/W DEEP RECESS TORNILLO HEXAGONAL CON RONDONA	2					
7	90465–06M86	CLAMP BRIDA	1					
8	97E95–06512	BOLT, HEXAGON W/W DEEP RECESS TORNILLO HEXAGONAL CON RONDONA	1					
9	90465–11M10	CLAMP BRIDA	1					
10	61A–85885–00	THROTTLE SENSOR ASSY TERMICA SENSORIO	1					
11	97985–05210	SCREW, WITH WASHER TORNILLO, CON ARANDELA	2					
12	90464–09M47	CLAMP BRIDA	1					
13	90465–11M10	CLAMP BRIDA	2					
14	6K7–14573–00	LEVER PALANCA	1					
15	67F–83635–00	BRACKET SOPORTE	1					
16	90387–05M00	COLLAR ESPACIADOR	2					
17	90480–10M23	GROMMET TAPON	2					
18	90201–05M03	WASHER, PLATE ARANDELA PLANA	2					
19	97985–05325	SCREW, WITH WASHER TORNILLO, CON ARANDELA	2					
20	68V–82504–00	OIL PRESSURE SWITCH ASSY INTERRUPTOR PRESION DE ACEITE	1					
21	63D–82563–11	TRIM & TILT SWITCH ASSY INTERRUPTOR DE INCLINACION	1					
22	6E5–82587–00	GASKET EMPAQUETADURA	1					
23	67F–83614–00	BRACKET SOPORTE	1					
24	90109–06M86	BOLT PERNO	2					
25	90464–09M47	CLAMP BRIDA	1					

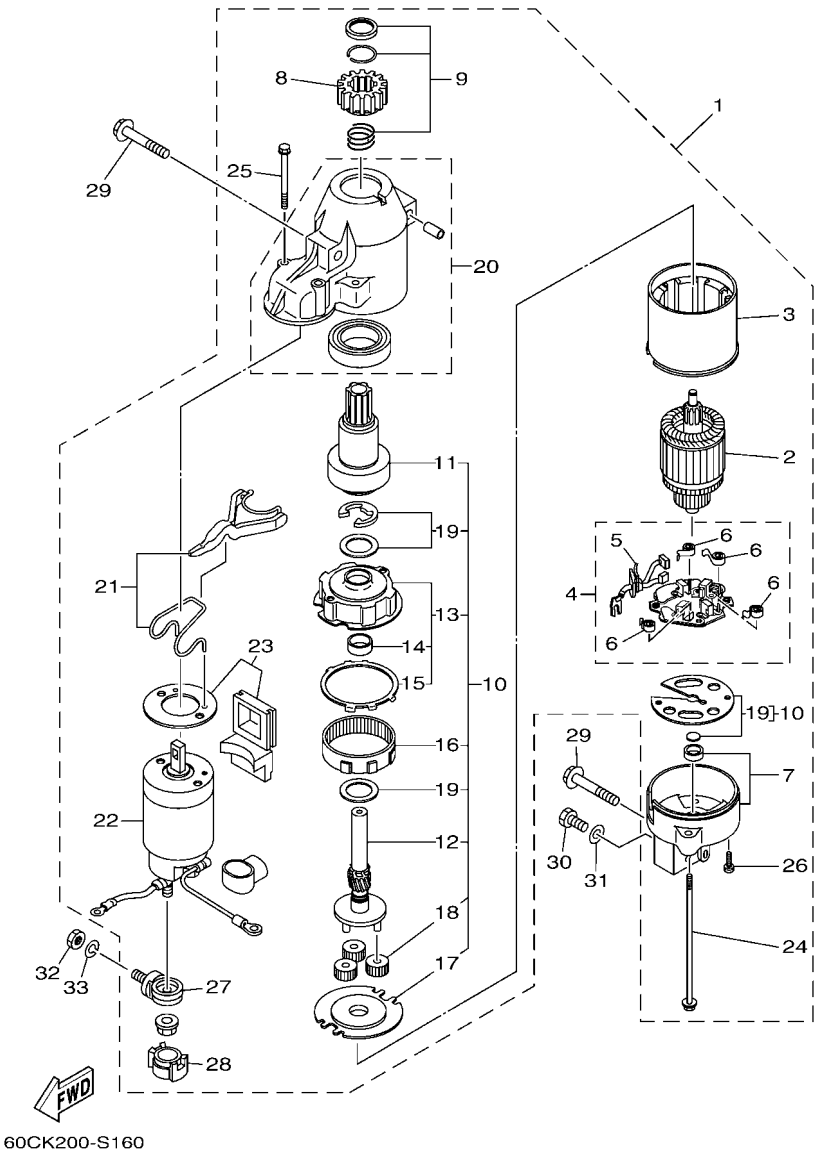

FIG. 16 STARTING MOTOR — MOTOR DE ARRANQUE

REF. NO.	PART NO. CODIGO Nº	DESCRIPTION DESCRIPCION	60CN					REMARKS OBSERVACIONES
1	67F–81800–04	STARTING MOTOR ASSY MOTOR DE ARRANQUE COMPLETO	1					
2	67F–81850–00	.ARMATURE ASSY .INDUCIDO COMPLETO	1					
3	67F–81810–00	.STATOR ASSY .ESTATOR COMPLETO	1					
4	69J–81840–11	.BRUSH HOLDER ASSY .SOSTEN DE ESCOBILLA COMPLETO	1					
5	69J–81801–11	..BRUSH SET ..JUEGO DE ESCOBILLA	1					
6	67F–81813–00	..SPRING, BRUSH ..RESORTE DE ESCOBILLA	4					
7	68F–81820–00	.REAR BRACKET ASSY .CUBIERTA TRASERA COMPL	1					
8	67F–81808–00	.PINION ASSY .PINON	1					
9	67F–81857–00	.PINION STOPPER SET .JUEGO TAPON PINON	1					
10	67F–81807–00	.GEAR ASSY, STARTING MOTOR .PINON CONJUNTO	1					
11	67F–81832–00	..CLUTCH, OVER RUN ..PINON COMPL	1					
12	67F–81836–00	..SHAFT, PINION ..ARBOL, PINON	1					
13	67F–81821–00	..BRACKET, CENTER 1 ..SOPORTE, CENTRO 1	1					
14	67F–81841–00	...BEARING ...PORTADOR	1					
15	67F–8183R–00	...GASKET ...EMPAQUETADURA	1					
16	67F–81891–00	..GEAR, RING ..ENGRANAJE ANILLO	1					WITH 67F-8183R-00 WITH 67F-8183R-00
17	67F–81830–00	..BRACKET, CENTER 2 ..SOPORTE, CENTRO 2	1					
18	60V–8183T–00	..GEAR, IDLER ..ENGRENAJE NEUTRO	3					
19	67F–81809–00	..WASHER KIT ..JUEGO DE ARANDELA	1					
20	60X–81842–00	.COVER .TAPA	1					
21	6C5–81839–00	.LEVER ASSY .PALANCA COMPL.	1					
22	67F–81941–02	.STARTER RELAY ASSY .RELE DE ARRANQUE	1					
23	6C5–81869–00	.COVER, DUST .CUBIERTA PARA POLVO	1					
24	6K7–81826–11	.BOLT .PERNO	2					
25	69J–81828–00	.BOLT 2 .TORNILLO DE EMPUJE 2	2					
26	67F–81846–00	.SCREW .TORNILLO	2					
27	60V–81925–00	.TERMINAL .TERMINAL	1					

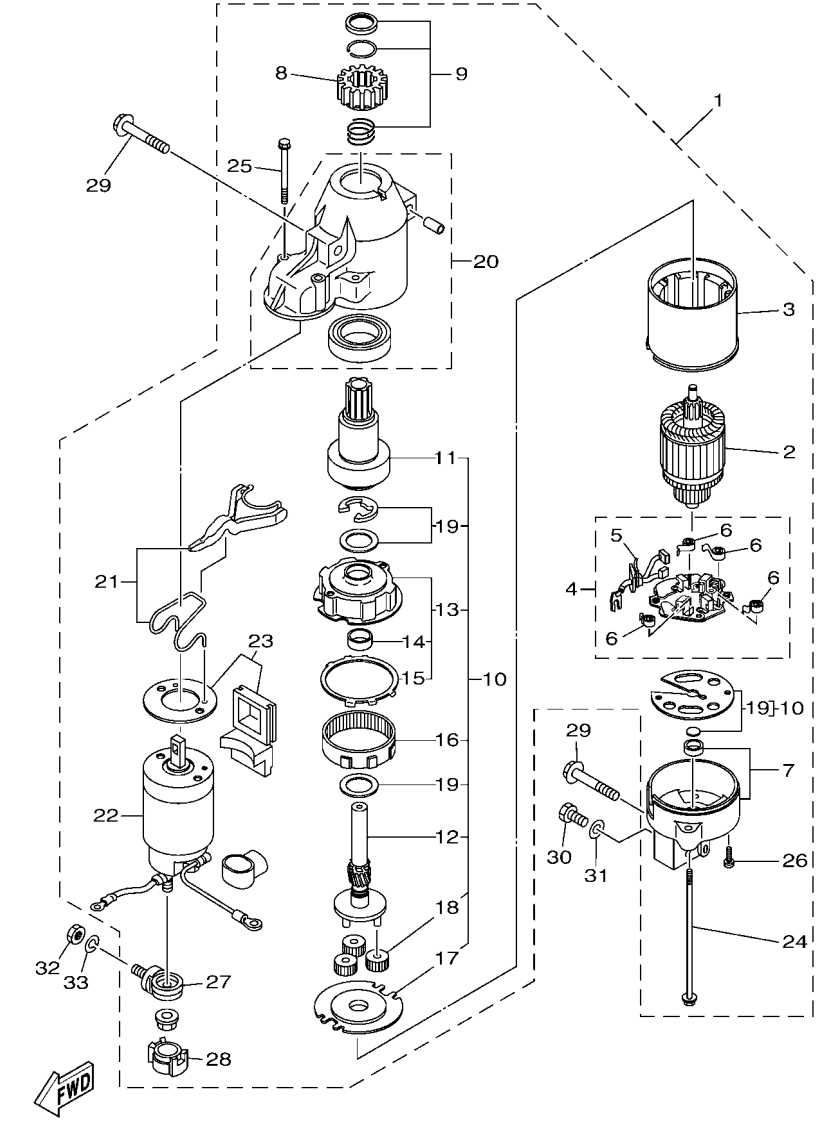

60CK200-S160

FIG. 16 STARTING MOTOR — MOTOR DE ARRANQUE

REF. NO.	PART NO. CODIGO Nº	DESCRIPTION DESCRIPCION	60CN					REMARKS OBSERVACIONES
28	68F–82582–00	.CAP,1 .TAPA 1	1					
29	97513–08545	BOLT, WITH WASHER PERNO CON ARANDELA	3					
30	97013–08016	BOLT PERNO	1					
31	92903–08600	WASHER, PLATE RONDANA SENCILLA	1					
32	95333–08600	NUT TUERCA	1					
33	92903–08100	WASHER, SPRING RONDANA SENCILLA	1					

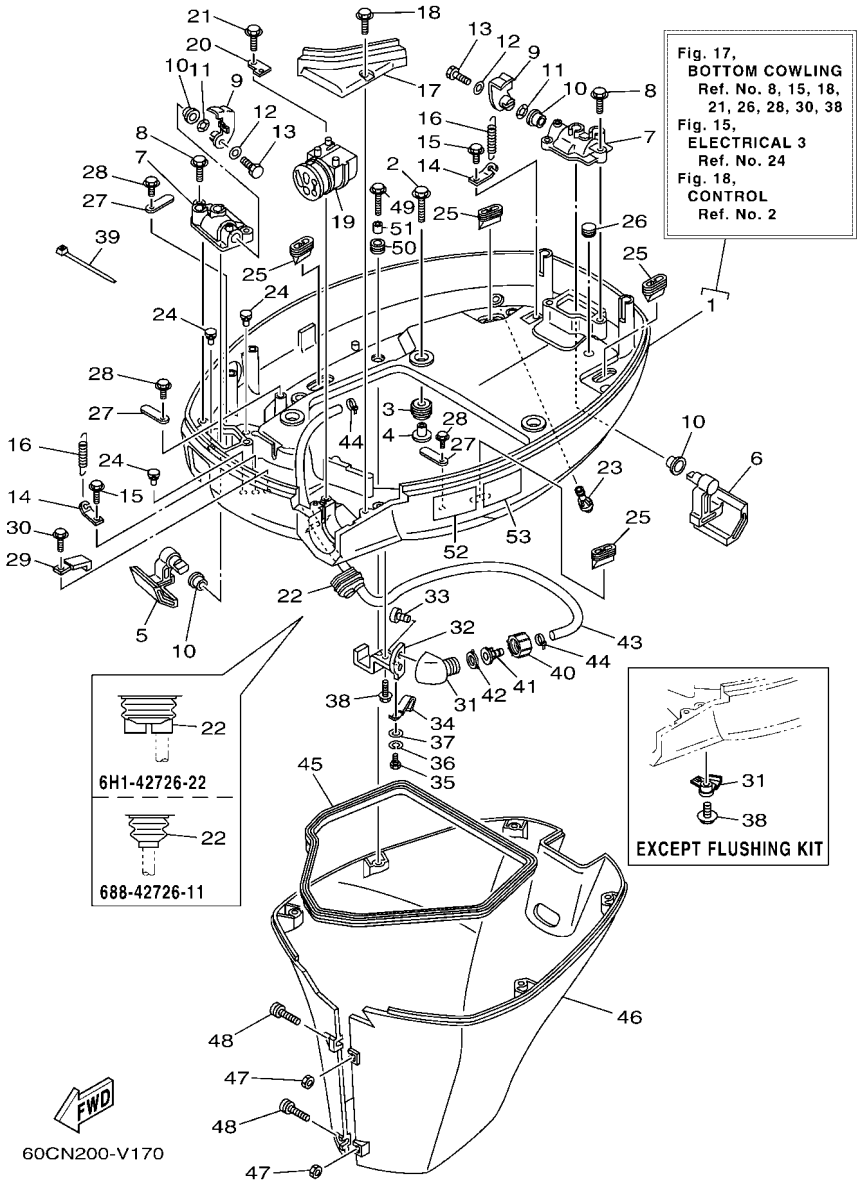

FIG. 17 BOTTOM COWLING — CUBIERTA INFERIOR

REF. NO.	PART NO. CODIGO Nº	DESCRIPTION DESCRIPCION	60CN					REMARKS OBSERVACIONES
1	67F–42710–03–8D	BOTTOM COWLING ASSY CUBIERTA INFERIOR COMPL.	1					
2	90119–08187	BOLT, WITH WASHER TORNILLO CON ARANDELA	4					
3	90480–22M15	GROMMET TAPON	4					
4	90387–08M37	COLLAR ESPACIADOR	4					
5	67F–42815–00–8D	LEVER, CLAMP 1 PALANCA ABRAZADERA 1	1					
6	67F–42816–00–8D	LEVER, CLAMP 2 PALANCA ABRAZADERA 2	1					
7	67F–42828–00–9S	PLATE, CLAMP PLACA, GRAMPA	2					
8	90109–06M82	BOLT PERNO	4					
9	68V–42818–01	LEVER, CLAMP 4 PALANCA, ABRAZADERA 4	2					
10	90386–15M73	BUSH BUJE	4					
11	90206–15M18	WASHER, WAVE ARANDELA ONDULADA	2					
12	90201–06068	WASHER, PLATE ARANDELA PLANA	2					
13	97D95–06016	BOLT, HEXAGON DEEP RECESS TORNILLO HEXAGONAL	2					
14	64D–43144–00	HOOK, SPRING GANCHO	2					
15	90109–06M86	BOLT PERNO	2					
16	90506–16M34	SPRING, TENSION RESORTE DE TENSION	2					
17	67F–42738–00–8D	PLATE, FITTING PLACA DE AJUSTE	1					
18	90109–06M96	BOLT PERNO	2					
19	68V–42725–11	GROMMET TAPON	1					
20	67F–42756–01	STAY, CLAMP SOPORTE DE GRAMPA	1					
21	90109–06M86	BOLT PERNO	1					
22	688–42726–11	GROMMET TAPON	1					EXCEPT FLUSHING KIT EXCEPT FLUSHING KIT
	6H1–42726–22	GROMMET TAPON	1					FLUSHING KIT FLUSHING KIT
23	6BL–44391–00	NIPPLE, HOSE NIPLE MANGUERA	1					
24	6H4–42748–01	GROMMET TAPON	3					
25	67F–42717–00	RUBBER, SEAL 2 GOMA	4					
26	90338–11007	PLUG TAPON	1					

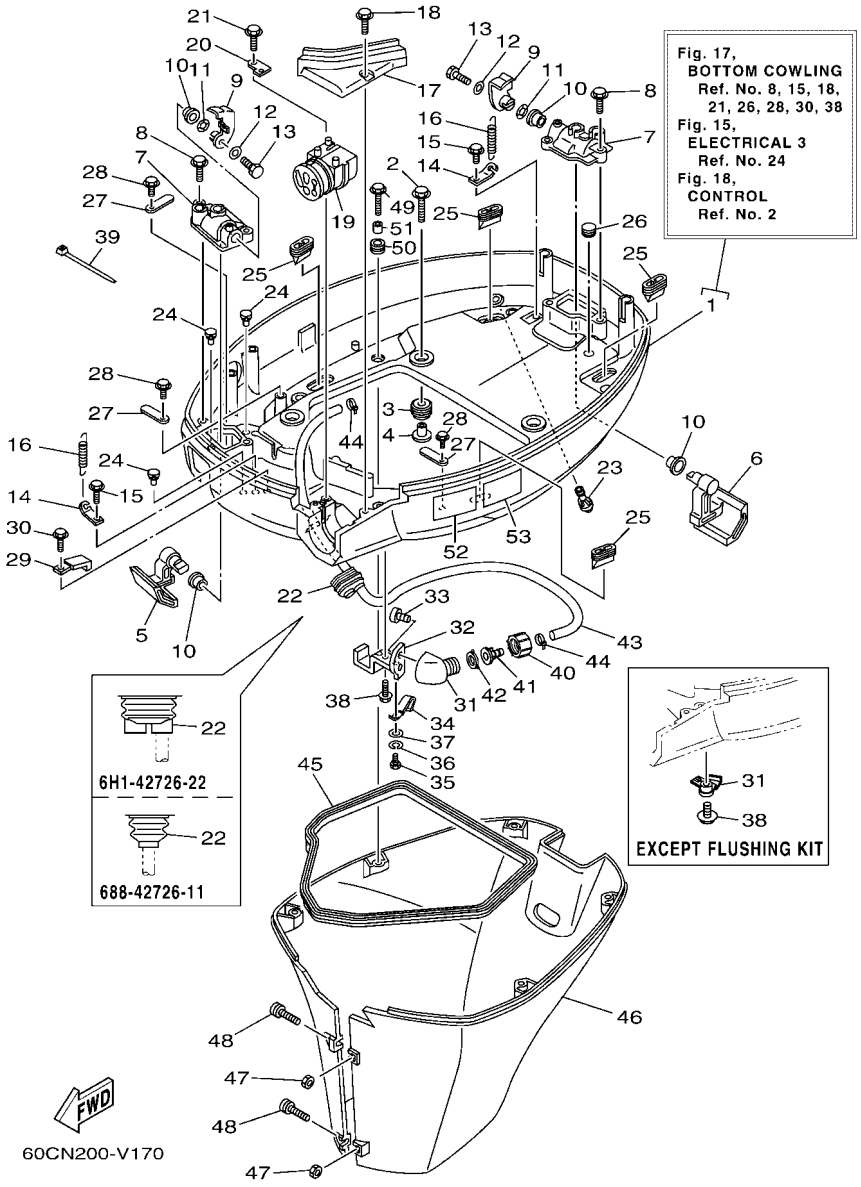

FIG. 17 BOTTOM COWLING — CUBIERTA INFERIOR

REF. NO.	PART NO. CODIGO Nº	DESCRIPTION DESCRIPCION	60CN					REMARKS OBSERVACIONES
27	6E5–82588–00	PLATE PLACA	3					
28	90109–06M81	BOLT PERNO	3					
29	90465–08M23	CLAMP BRIDA	1					
30	90109–06M86	BOLT PERNO	1					
31	67F–24367–00	CLAMP, FUEL PIPE 2 GRAMPA DE TUBO DE COMBUST.2	1					EXCEPT FLUSHING KIT EXCEPT FLUSHING KIT
	6DR–12572–00	ADAPTER ADAPTADOR	1					FLUSHING KIT FLUSHING KIT
32	67F–12535–01	PLATE EMPAQUETADURA	1					FLUSHING KIT FLUSHING KIT
33	90167–06002	SCREW, TAPPING TORNILLO DE ROSCA HEMBRA	2					FLUSHING KIT FLUSHING KIT
34	90462–06018	CLAMP BRIDA	1					FLUSHING KIT FLUSHING KIT
35	97D95–06008	BOLT, HEXAGON DEEP RECESS TORNILLO HEXAGONAL	1					FLUSHING KIT FLUSHING KIT
36	92995–06100	WASHER, SPRING ARANDELA	1					FLUSHING KIT FLUSHING KIT
37	92995–06200	WASHER ARANDELA	1					FLUSHING KIT FLUSHING KIT
38	90109–06M82	BOLT PERNO	1					EXCEPT FLUSHING KIT EXCEPT FLUSHING KIT
	90109–06M86	BOLT PERNO	1					FLUSHING KIT FLUSHING KIT
39	90465–13M18	CLAMP BRIDA	1					
40	6R3–12581–00	JOINT, HOSE 1 CONEXION	1					FLUSHING KIT FLUSHING KIT
41	6R3–12582–00	JOINT, HOSE 2 CONEXION	1					FLUSHING KIT FLUSHING KIT
42	6R3–12583–00	GASKET, HOSE JOINT EMPAQUETADURA JUNTA DE MANGUE	1					FLUSHING KIT FLUSHING KIT
43	67F–24312–00	PIPE 2 TUBO 2	1					FLUSHING KIT FLUSHING KIT
44	90465–11M10	CLAMP BRIDA	2					FLUSHING KIT FLUSHING KIT
45	61A–42716–01	RUBBER SEAL 1 SELLO DE GOMA 1	1					
46	67F–42741–01–8D	APRON MANDIL	1					
47	95380–06600	NUT, HEXAGON TUERCA	2					
48	90159–06M28	SCREW, WITH WASHER TORNILLO CON VALONA	2					
49	90109–06M80	BOLT PERNO	5					
50	90480–13M24	GROMMET TAPON	5					
51	90387–06M43	COLLAR ESPACIADOR	5					

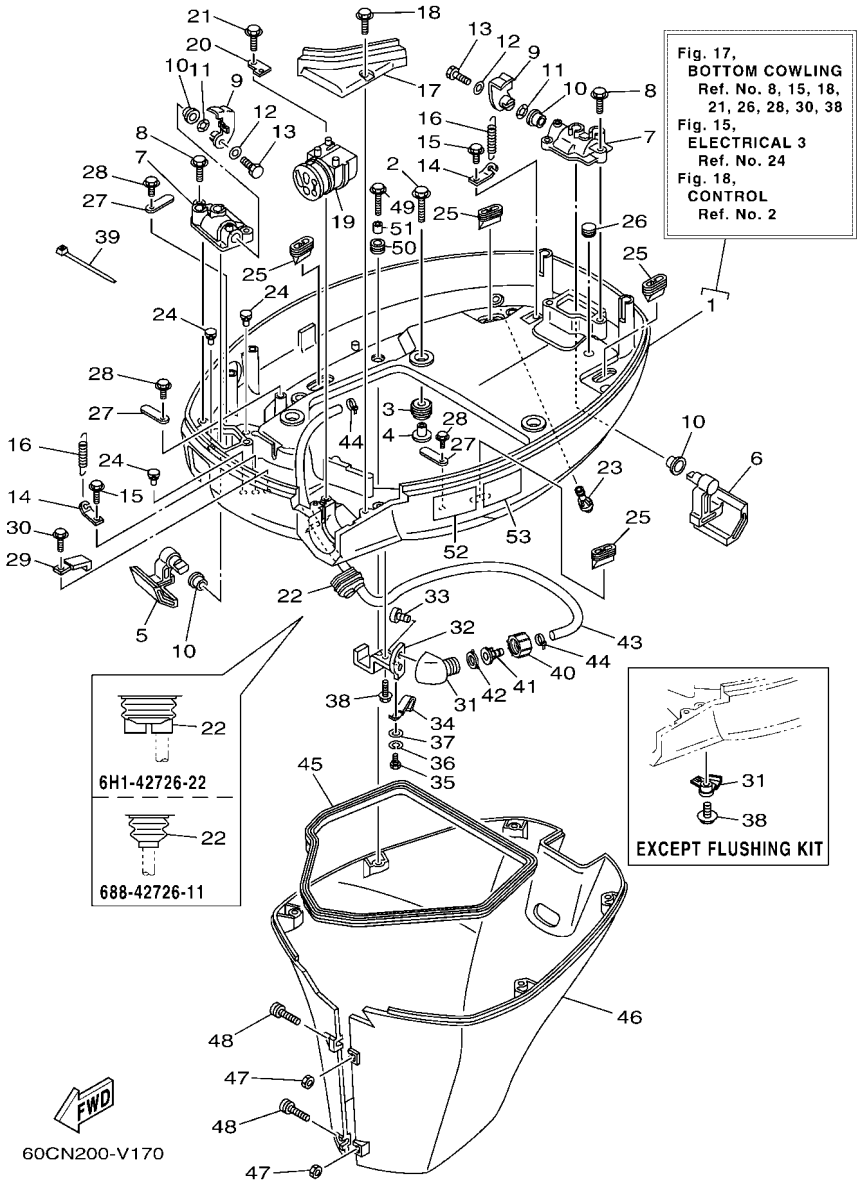

FIG. 17 BOTTOM COWLING — CUBIERTA INFERIOR

REF. NO.	PART NO. CODIGO Nº	DESCRIPTION DESCRIPCION	60CN					REMARKS OBSERVACIONES
52	6EE–42794–40	LABEL, WARNING (GENERAL) ETIQUETA DE PRECAUCION	1					
53	6EE–42794–50	LABEL, WARNING (GENERAL) ETIQUETA DE PRECAUCION	1					FOR CAR(CE) FOR CAR(CE)

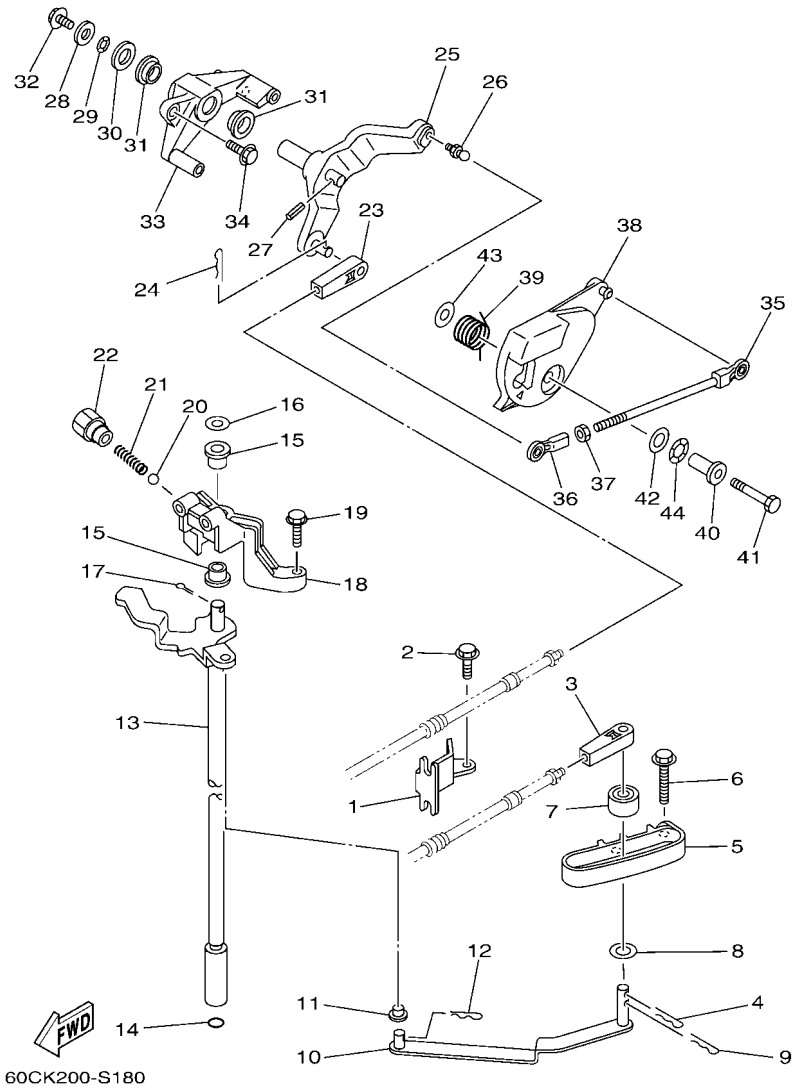

FIG. 18 CONTROL — CONTROL

REF. NO.	PART NO. CODIGO Nº	DESCRIPTION DESCRIPCION	60CN					REMARKS OBSERVACIONES
1	67F–48538–00	CLAMP, CABLE 1 GRAMPA DE CABLE	1					
2	90109–06M86	BOLT PERNO	1					
3	6FM–48344–00	CABLE END, REMOTE CONTROL BASE CONTROL	1					
4	90468–18008	CLIP PRESILLA	1					
5	67F–44117–00–94	BRACKET SOPORTE	1					
6	97E95–06540	BOLT, HEXAGON W/W DEEP RECESS TORNILLO HEXAGONAL CON RONDONA	2					
7	688–44122–00	BUSHING, SHIFT ROD LEVER BUJE PALANCA VARILLA DE CAMBIO	1					
8	90202–07M07	WASHER, PLATE ARANDELA DE PLANA	1					
9	90468–18008	CLIP PRESILLA	1					
10	67F–44121–00	LEVER, SHIFT ROD PALANCA VARILLA CAMBIOS	1					
11	90386–06M12	BUSH BUJE	1					
12	90468–18008	CLIP PRESILLA	1					
13	60C–44120–12	HANDLE GEAR SHIFT ASSY MANIJA DE CAMBIO COMPL	1					L(20.3") L(20.3")
	60C–44120–32	HANDLE GEAR SHIFT ASSY MANIJA DE CAMBIO COMPL	1					X(25.3") X(25.3")
14	93210–09165	O-RING ANILLO O	1					
15	90386–90M90	BUSH BUJE	2					
16	90201–09M02	WASHER, PLATE ARANDELA PLANA	1					
17	91490–20015	PIN. COTTER CHAVETA	1					
18	68V–44118–00	BRACKET SOPORTE	1					
19	97E75–06525	BOLT, HEXAGON W/W DEEP RECESS TORNILLO HEXAGONAL CON RONDONA	2					
20	93501–04M02	BALL BOLA	1					
21	90501–12082	SPRING, COMPRESSION RESORTE DE COMPRESION	1					
22	648–42715–00	BUSHING 2 BUJE 2	1					
23	6FM–48344–00	CABLE END, REMOTE CONTROL BASE CONTROL	1					
24	90468–18008	CLIP PRESILLA	1					
25	67F–42154–00–94	LEVER, THROTTLE CONTROL PALANCA CONTROL ACELERADOR	1					
26	663–85518–00	JOINT, BALL CONECTOR	1					

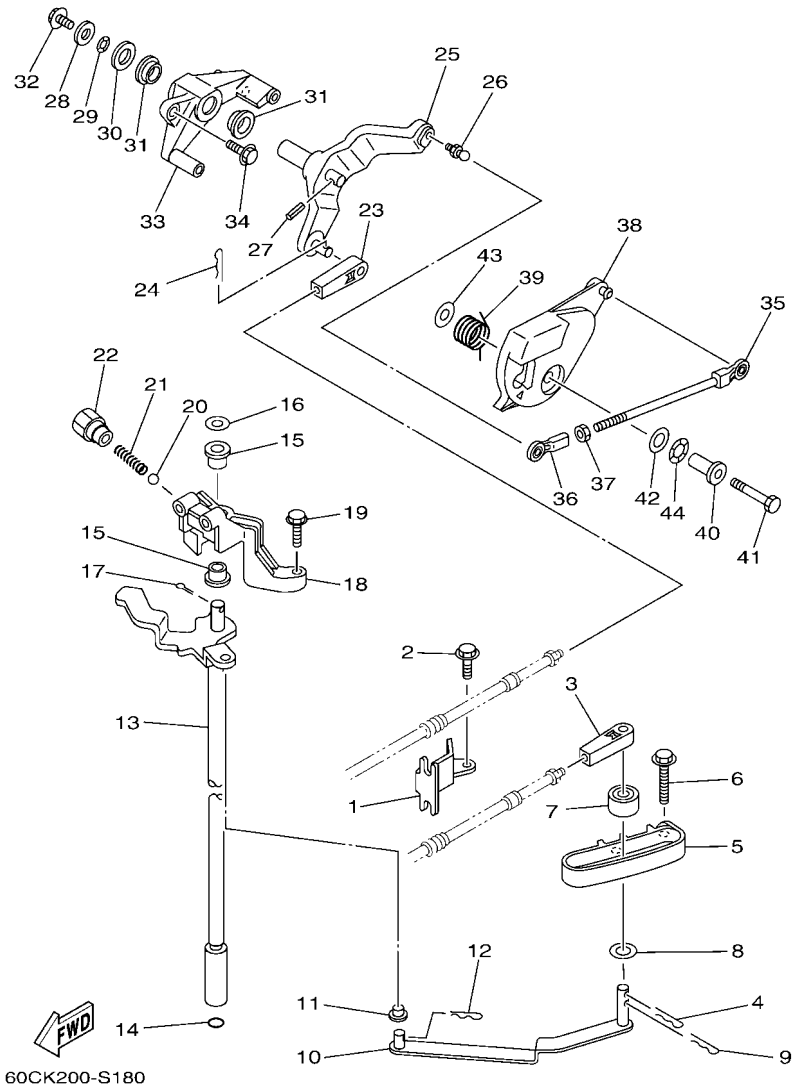

FIG. 18 CONTROL

CONTROL

REF. NO.	PART NO. CODIGO Nº	DESCRIPTION DESCRIPCION	60CN					REMARKS OBSERVACIONES
27	91690–30018	PIN, SPRING PASADOR DE RESORTE	1					
28	90201–06068	WASHER, PLATE ARANDELA PLANA	1					
29	90206–12M00	WASHER, WAVE ARANDELA ONDULADA	1					
30	92990–12600	WASHER, PLATE ARANDELA PLANA	1					
31	90386–12069	BUSH BUJE	2					
32	97E95–06512	BOLT, HEXAGON W/W DEEP RECESS TORNILLO HEXAGONAL CON RONDONA	1					
33	67F–41661–00–94	BRACKET 1 SOPORTE 1	1					
34	97E95–06525	BOLT, HEXAGON W/W DEEP RECESS TORNILLO HEXAGONAL CON RONDONA	2					
35	67F–41237–00	JOINT, LINK CONECTOR	1					
36	682–41237–00	JOINT, LINK CONECTOR	1					
37	95380–05600	NUT TUERCA	1					
38	67F–41213–01	CAM, ACCEL. LEVA ACELERADOR	1					
39	67F–44135–00	SPRING RESORTE	1					
40	90387–06M82	COLLAR ESPACIADOR	1					
41	97D95–06035	BOLT, HEXAGON DEEP RECESS TORNILLO HEXAGONAL	1					
42	90201–10M02	WASHER, PLATE ARANDELA PLANA	1					
43	90201–06M31	WASHER, PLATE ARANDELA PLANA	1					
44	90206–10M04	WASHER, WAVE ARANDELA ONDULADA	1					

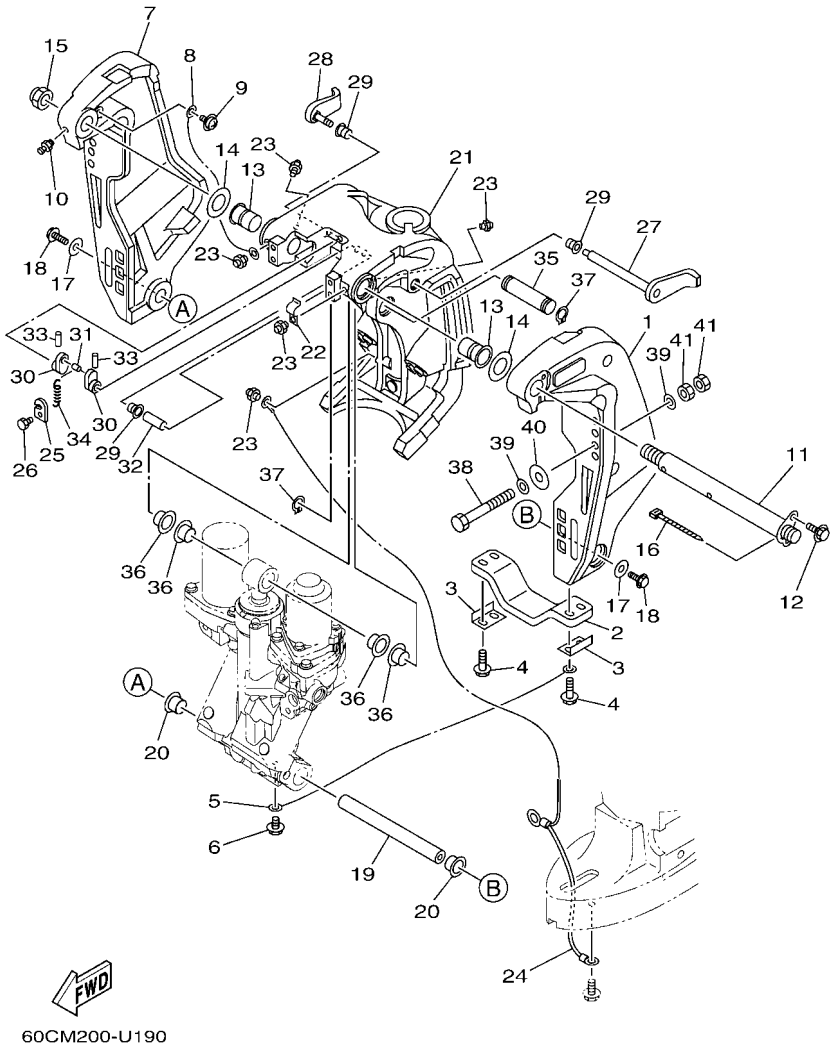

FIG. 19 BRACKET 1 SOPORTE 1

REF. NO.	PART NO. CODIGO Nº	DESCRIPTION DESCRIPCION	60CN					REMARKS OBSERVACIONES
1	68V–43111–01–8D	BRACKET, CLAMP 1 SOPORTE DE LA ABRAZADERA 1	1					
2	6G5–45251–02	ANODE CATODE	1					
3	6G5–44526–00	PLATE PLACA 1	2					
4	97E95–06530	BOLT, HEXAGON W/W DEEP RECESS TORNILLO HEXAGONAL CON RONDONA	4					
5	6E5–82148–00	WIRE, LEAD 4 CABLE CONDUCTOR 4	1					
6	97E95–06510	BOLT, HEXAGON W/W DEEP RECESS TORNILLO HEXAGONAL CON RONDONA	1					
7	68V–43112–01–8D	BRACKET, CLAMP 2 SOPORTE DE LA ABRAZADERA 2	1					
8	6E5–82148–00	WIRE, LEAD 4 CABLE CONDUCTOR 4	1					
9	97985–06212	SCREW, WITH WASHER TORNILLO, CON ARANDELA	1					
10	93700–06002	NIPPLE, GREASE BOQUILLA DE ENGRASAR	1					
11	64E–43131–01	BOLT, CLAMP BRACKET TORNILLO DE ABRAZADERA DEL SOP	1					
12	97E95–08520	BOLT, HEXAGON W/W DEEP RECESS TORNILLO HEXAGONAL CON RONDONA	1					
13	90386–25M31	BUSH BUJE	2					
14	90201–26M59	WASHER, PLATE ARANDELA PLANA	2					
15	90185–22M11	NUT, SELF-LOCKING TUERCA AUTOBLOCANTE	1					
16	90465–11M10	CLAMP BRIDA	1					
17	90201–10060	WASHER, PLATE ARANDELA PLANA	2					
18	90119–10054	BOLT, WITH WASHER TORNILLO CON ARANDELA	2					
19	6BC–43818–00	PIN, LOWER SHOCK MOUNT PASADOR AMORTIGUADOR INFERIOR	1					
20	90386–22M98	BUSH BUJE	2					
21	64E–43311–10–8D	BRACKET, SWIVEL 1 SOPORTE GIRATORIO 1	1					L(20.3") L(20.3")
	64E–43311–20–8D	BRACKET, SWIVEL 1 SOPORTE GIRATORIO 1	1					X(25.3") X(25.3")
22	90465–08M63	CLAMP BRIDA	1					
23	93700–06002	NIPPLE, GREASE BOQUILLA DE ENGRASAR	5					
24	66K–82149–00	WIRE, LEAD 3 CABLE CONDUCTOR 3	1					L(20.3") L(20.3")
	68V–82149–30	WIRE, LEAD 3 CABLE CONDUCTOR 3	1					X(25.3") X(25.3")
25	66T–43144–00	HOOK, SPRING GANCHO	1					

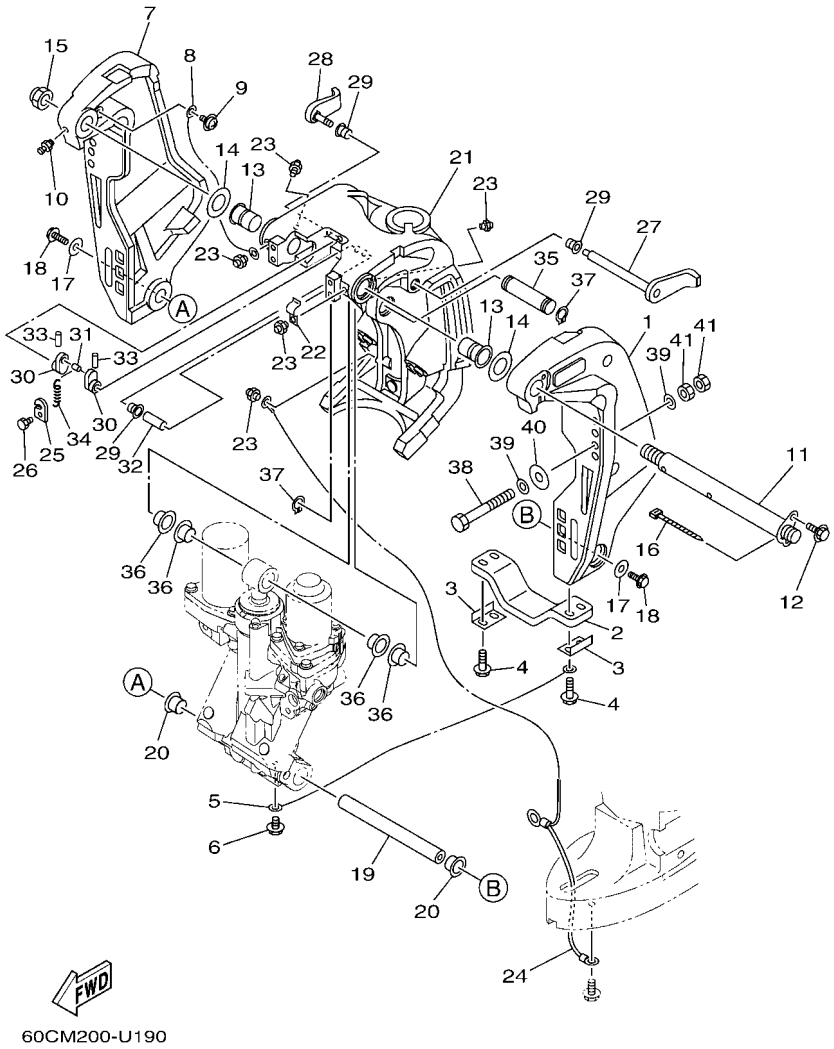

FIG. 19 BRACKET 1 SOPORTE 1

REF. NO.	PART NO. CODIGO Nº	DESCRIPTION DESCRIPCION	60CN					REMARKS OBSERVACIONES
26	97D95–06010	BOLT, HEXAGON DEEP RECESS TORNILLO HEXAGONAL	1					
27	6G5–43181–02	LEVER, TILT STOP 1 PALANCA TOPE INCLINACION 1	1					
28	6G5–43185–02	LEVER, TILT STOP 2 PALANCA TOPE INCLINACION 2	1					
29	90386–10M16	BUSH BUJE	3					
30	6G5–43148–00	COLLAR, DISTANCE COLLAR	2					
31	90249–06M19	PIN PASADOR	1					
32	90387–10M05	COLLAR ESPACIADOR	1					
33	91690–30020	PIN, SPRING PASADOR DE RESORTE	2					
34	90506–14M24	SPRING, TENSION RESORTE DE TENSION	1					
35	64E–43126–10	PIN, UPPER SHOCK MOUNT PASADOR DE AMORTIGUADOR SUPERI	1					
36	90386–22M98	BUSH BUJE	4					
37	93410–22M11	CIRCLIP SEGURO	2					
38	90101–12065	BOLT (L:130MM) TORNILLO (L:130MM)	4					
39	90201–13M01	WASHER, PLATE ARANDELA PLANA	8					
40	90201–12426	WASHER, PLATE ARANDELA PLANA	4					
41	95380–12600	NUT TUERCA	8					

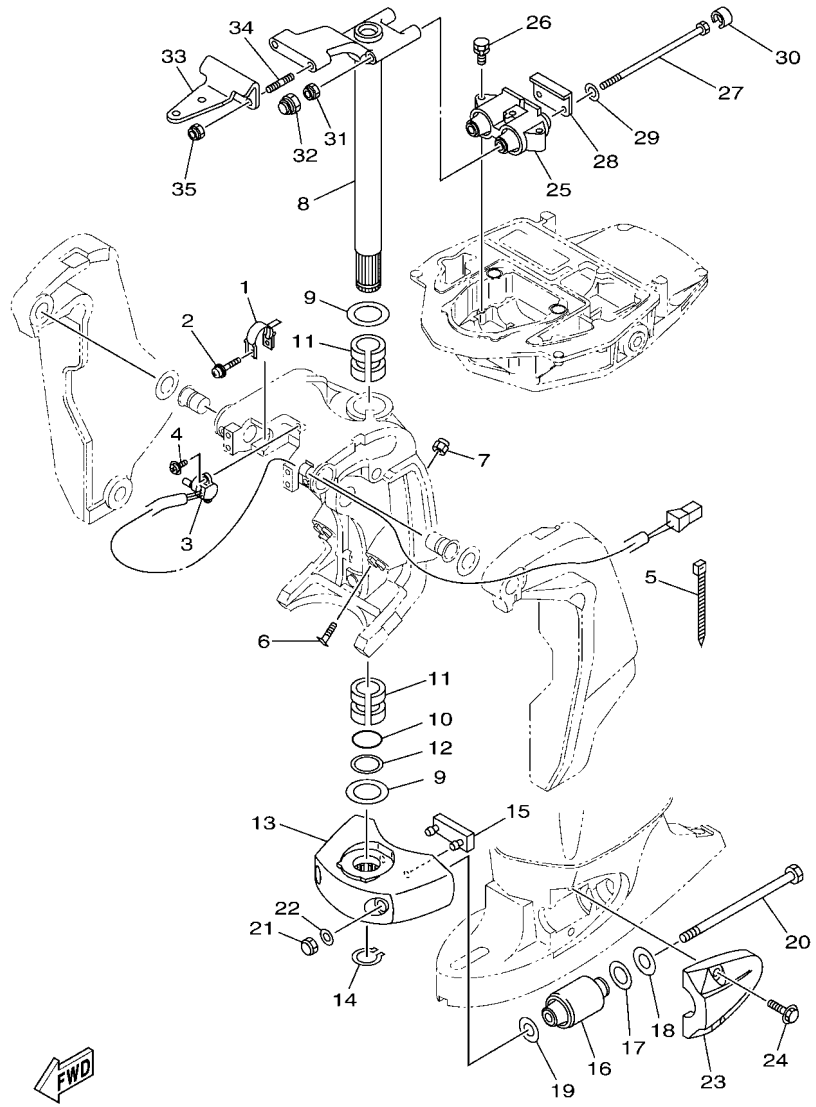

60CL200-T200

FIG. 20 BRACKET 2 — SOPORTE 2

REF. NO.	PART NO. CODIGO Nº	DESCRIPTION DESCRIPCION	60CN					REMARKS OBSERVACIONES
1	64E–43139–11	CAM, TRIM SENDER LEVA TRANSMISOR DE INCLINDOR	1					
2	90159–05059	SCREW, WITH WASHER TORNILLO CON VALONA	1					
3	67H–83672–02	TRIM SENDER TRANSMISOR DE INCLINADOR	1					
4	97985–06216	SCREW, WITH WASHER TORNILLO, CON ARANDELA	2					
5	90465–11M10	CLAMP BRIDA	3					
6	61A–43376–00	BOLT, THRUST RECEIVER TORNILLO RECEPTOR	2					
7	95780–10300	NUT, FLANGE TUERCA	2					
8	68V–42510–11–8D	STEERING BRACKET ASSY SOPORTE DIRECCION COMPL.	1					L(20.3") L(20.3")
	68V–42510–31–8D	STEERING BRACKET ASSY SOPORTE DIRECCION COMPL.	1					X(25.3") X(25.3")
9	90201–38M60	WASHER, PLATE ARANDELA PLANA	2					
10	93210–37MH7	O-RING ANILLO O	1					
11	90386–38M32	BUSH BUJE	2					
12	90202–40M47	WASHER, PLATE ARANDELA DE PLANA	1					
13	68V–44551–00–8D	HOUSING, LOWER MOUNT RUBBER 1 CAJA AMORTIGUADOR INFERIOR HU	1					
14	93410–37M04	CIRCLIP SEGURO	1					
15	61A–44575–01	DAMPER, LOWER MOUNT RUBBER AMORTIGUADOR INFERIOR	1					
16	61A–44555–01	MOUNT DAMPER, LOWER SIDE AMORTIGUADOR DE HULE LADO INFE	2					
17	90202–32M19	WASHER, PLATE ARANDELA DE PLANA	2					
18	90201–16M55	WASHER, PLATE ARANDELA PLANA	2					
19	90201–15M58	WASHER, PLATE ARANDELA PLANA	2					
20	90109–14007	BOLT PERNO	2					
21	90176–14003	NUT, CROWN TUERCA CORONA	2					
22	92995–14600	WASHER ARANDELA	2					
23	68V–44553–00–8D	COVER, LOWER MOUNT CUBIERTA,AMORTIGUADOR INFERIOR	2					
24	90119–10058	BOLT, WITH WASHER TORNILLO CON ARANDELA	4					
25	67F–44514–01	MOUNT DAMPER, UPPER SIDE AMORTIGUADOR LADO SUPERIOR	1					
26	90119–08091	BOLT, WITH WASHER TORNILLO CON ARANDELA	3					

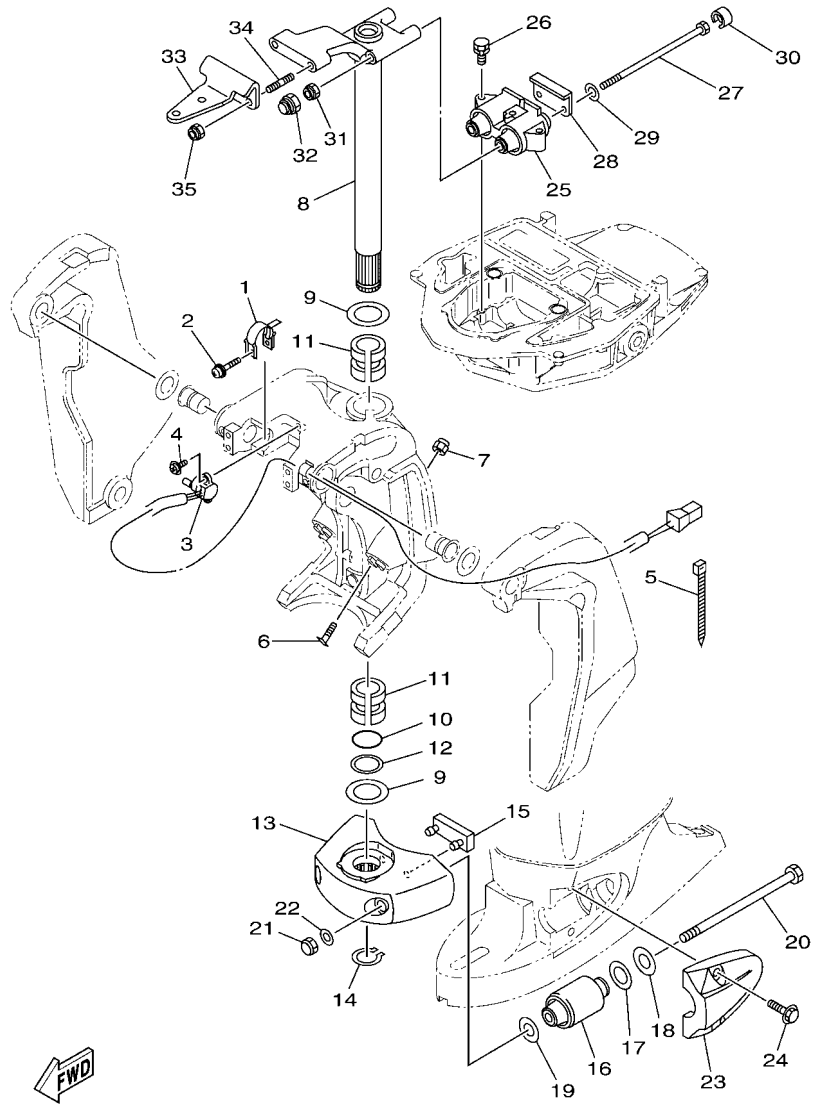

60CL200-T200

FIG. 20 BRACKET 2 — SOPORTE 2

REF. NO.	PART NO. CODIGO Nº	DESCRIPTION DESCRIPCION	60CN					REMARKS OBSERVACIONES
27	90109–12007	BOLT PERNO	2					
28	67F–44526–00	PLATE PLACA 1	1					
29	90201–12M09	WASHER, PLATE ARANDELA PLANA	2					
30	67F–44533–00	DAMPER, UPPER MOUNT RUBBER AMORTIGUADOR SUPERIOR	2					
31	90185–12M12	NUT, SELF-LOCKING TUERCA AUTOBLOCANTE	2					
32	60H–44194–00	CAP TAPA	2					
33	68V–48511–01	HOOK, STEERING GANCHO DIRECCION	1					
34	90116–10062	BOLT, STUD ESPARRAGO	2					
35	90185–10027	NUT, SELF-LOCKING TUERCA AUTOBLOCANTE	2					

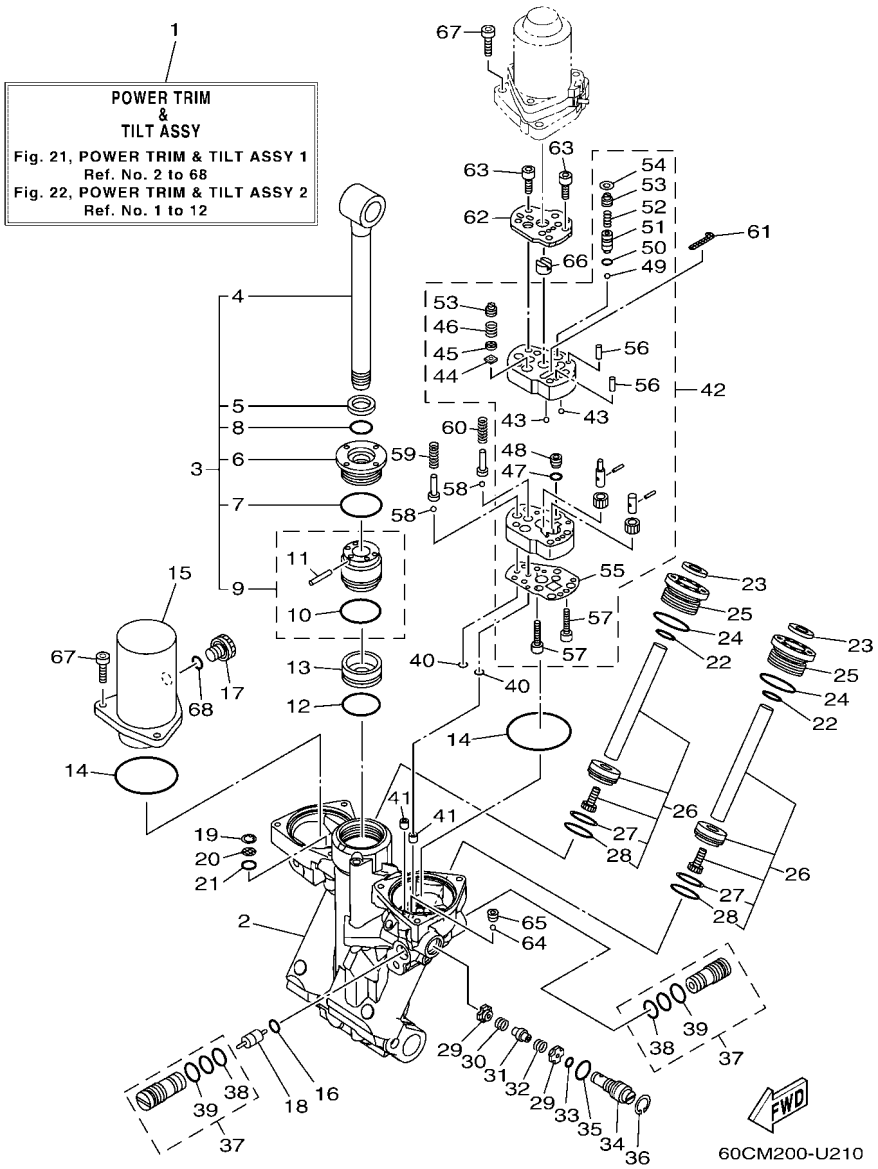

FIG. 21 POWER TRIM & TILT ASSY 1 — COMPONER Y PODER VARILLA 1

REF. NO.	PART NO. CODIGO Nº	DESCRIPTION DESCRIPCION	60CN					REMARKS OBSERVACIONES
1	68V–43800–11	POWER TRIM & TILT ASSY ELEVADOR HIDRAULICO COMPL.	1					
2	68V–4380L–11	HOUSING, TRIM & TILT SUB ASSY CAJA, INCLINACION Y ADRNO	1					
3	64E–43810–11	TILT PISTON SUB ASSY ELEVADOR SUB-PISTON COMPL.	1					
4	63P–43801–10	.ROD .VALILLA COMPL INCLINACION	1					
5	93106–19001	.OIL SEAL .SELLO ACEITE	1					
6	63P–43811–20	.SCREW, CYLINDER END .TORNILLO CILINDRO EXTREMO	1					
7	63P–43861–20	.O-RING .ANILLO EN O 1	1					
8	63P–43863–10	.O-RING .ANILLO EN O 3	1					
9	64E–4380P–10	.PISTON SUB ASSY .SUB-PISTON COMPL	1					
10	6H1–43862–00	..O-RING ..ANILLO EN O 2	1					
11	91609–16010	..PIN, SPRING ..PASADOR DE RESORTE	1					
12	6H1–43862–00	O-RING ANILLO EN O 2	1					
13	63P–43814–20	PISTON, FREE PISTON LIBRE	1					
14	93210–68N50	O-RING ANILLO O	2					
15	63P–4382C–20	BODY, RESERVOIR 2 CUERPO DEPOSITO 2	1					
16	93210–09165	O-RING ANILLO O	1					
17	6CJ–43829–10	PLUG, RESERVOIR TAPON DEPOSITO	1					
18	6H1–43841–11	PISTON, SHUTTLE PISTON	1					
19	63P–43876–10	RING, SNAP ANILLO	1					
20	63P–43816–10	FILTER 1 FIELTRO 1	1					
21	93210–11N52	O-RING ANILLO O	1					
22	6D8–43863–00	O-RING ANILLO EN O 3	2					
23	63P–43812–20	SEAL, DUST SELLO DE POLVO	2					
24	63P–43862–10	O-RING ANILLO EN O 2	2					
25	63P–43821–21	SCREW, TRIM CYLINDER END TORNILLO CILINDRO EXTREMO	2					
26	63P–43820–20	TRIM PISTON SUB ASSY ELEVADOR PISTON COMPL.	2					
27	62X–43871–00	.RING, BACK UP .ANILLO	1					

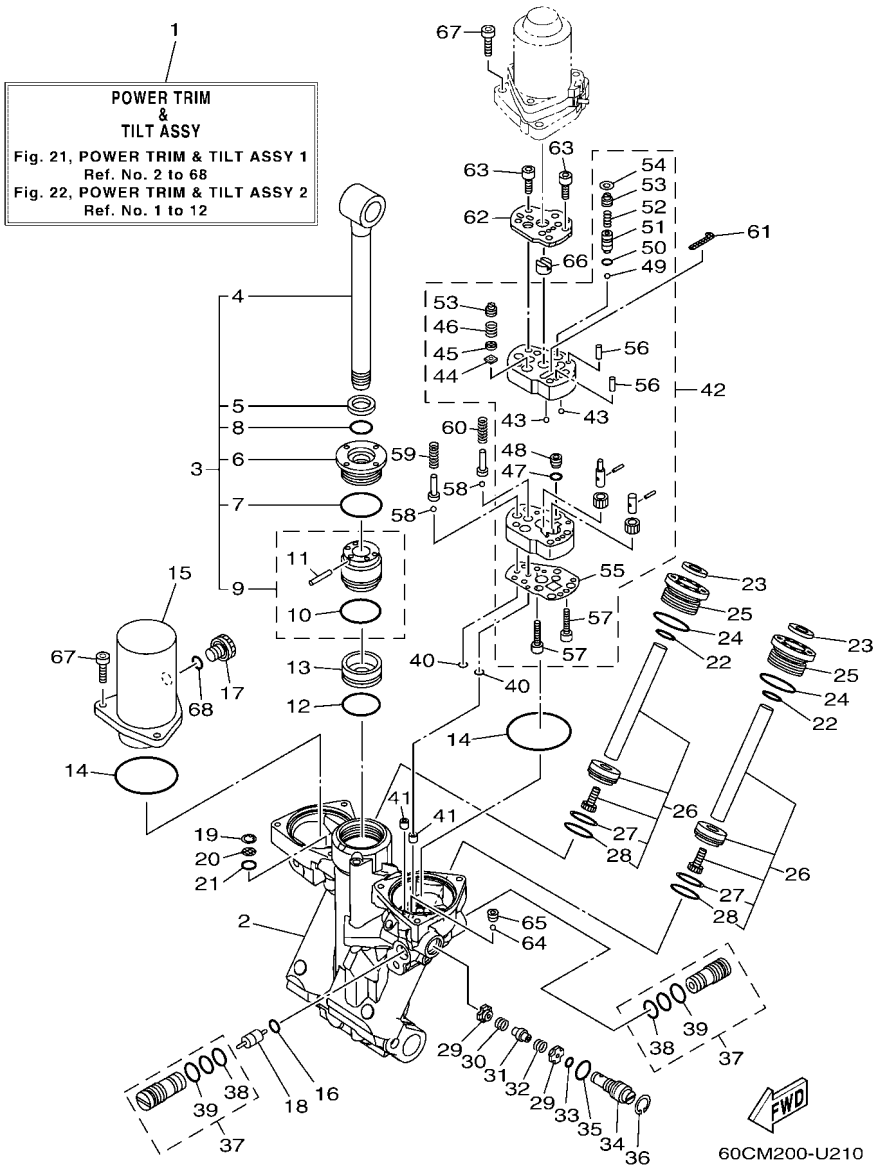

FIG. 21 POWER TRIM & TILT ASSY 1 — COMPONER Y PODER VARILLA 1

REF. NO.	PART NO. CODIGO Nº	DESCRIPTION DESCRIPCION	60CN					REMARKS OBSERVACIONES
28	93210–29375	.O-RING .ANILLO O	1					
29	63P–43847–10	SEAT, MANUAL VALVE ASIENTO VALVULA MANUAL	2					
30	63P–43854–10	SPRING, MANUAL RELEASE RESORTE DESCOPLO MANUAL	1					
31	63P–4382A–10	ADAPTOR 1 ADAPTADOR 1	1					
32	63P–4384H–10	SPRING RESORTE	1					
33	69J–4389J–00	O-RING ANILLO O	1					
34	63P–43845–20	SCREW, MANUAL RELEASE TORNILLO DESCOPLO MANUAL	1					
35	93210–12327	O-RING ANILLO O	1					
36	61A–43876–01	RING, SNAP ANILLO	1					
37	63P–43802–20	VALVE SUB ASSY VALVULA PRINCIPAL COMPL.	2					
38	93210–12N52	.O-RING .ANILLO O	1					
39	6H1–43866–01	.O-RING .ANILLO EN O 6	1					
40	93210–064A5	O-RING ANILLO O	2					
41	63P–4381C–20	FILTER 3 FIELTRO 3	2					
42	68V–43830–10	GEAR PUMP ASSY ENGRANAJE BOMBA COMPL.	1					
43	93503–16003	.BALL .ESFERA	2					
44	6H1–4384G–11	.SEAL, RELIEF VALVE .ASIENTO	1					
45	6H1–43844–10	.PIN, VALVE SUPPORT .PASADOR VALVULA SOPORTE	1					
46	6H1–43856–10	.SPRING, DOWN RELIEF .RESORTE SEGURIDAD	1					
47	93210–07N51	.O-RING .ANILLO O	1					
48	63P–43851–20	.SEAT, RELIEF VALVE .ASIENTO VALVULA DE DESCARGA	1					
49	93501–08001	.BALL .BOLA	1					
50	93210–064A5	.O-RING .ANILLO O	1					
51	63P–43844–20	.PIN, VALVE SUPPORT .PASADOR VALVULA SOPORTE	1					
52	68V–43855–10	.SPRING, UP RELIEF .RESORTE SEGURIDAD SUPERIOR	1					
53	63P–43843–10	.SCREW, VALVE LOCK .TORNILLO	2					
54	63P–43338–10	.WASHER, WAVE .ARANDELA ONDULADA	1					

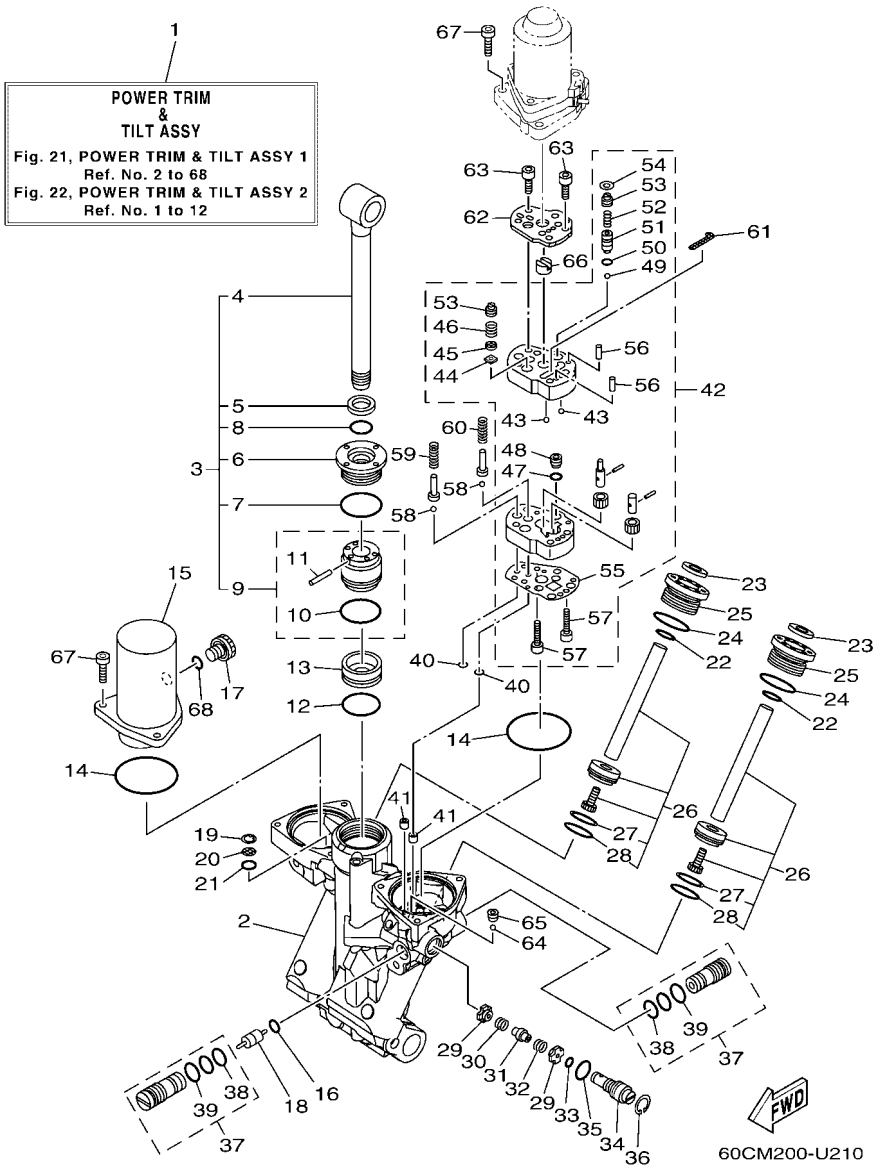

FIG. 21 POWER TRIM & TILT ASSY 1 — COMPONER Y PODER VARILLA 1

REF. NO.	PART NO. CODIGO Nº	DESCRIPTION DESCRIPCION	60CN					REMARKS OBSERVACIONES
55	63P–4384G–20	.SEAL, RELIEF VALVE .ASIENTO	1					
56	93604–10011	.PIN, DOWEL .PASADOR DE CLAVIJA	2					
57	91312–04020	.BOLT, HEXAGON SOCKET HEAD .TORNILLO ALLEN	2					
58	93501–08001	BALL BOLA	2					
59	63P–43857–10	SPRING, ABSORBER VALVE RESORTE	1					
60	63P–4385H–10	SPRING, SEAL RESORTE	1					
61	6CJ–43816–00	FILTER 1 FIELTRO 1	1					
62	63P–4381J–10	PLATE PLACA	1					
63	91312–05035	BOLT, HEXAGON SOCKET HEAD TORNILLO ALLEN	4					
64	93505–32038	BALL BOLA	1					
65	61A–43878–00	BOLT, SOCKET TORNILLO ENCASTRE	1					
66	69J–43831–00	CONNECTOR, SHAFT CONEXION EJE	1					
67	91380–06025	BOLT PERNO	6					
68	6CJ–43861–10	O-RING ANILLO EN O 1	1					

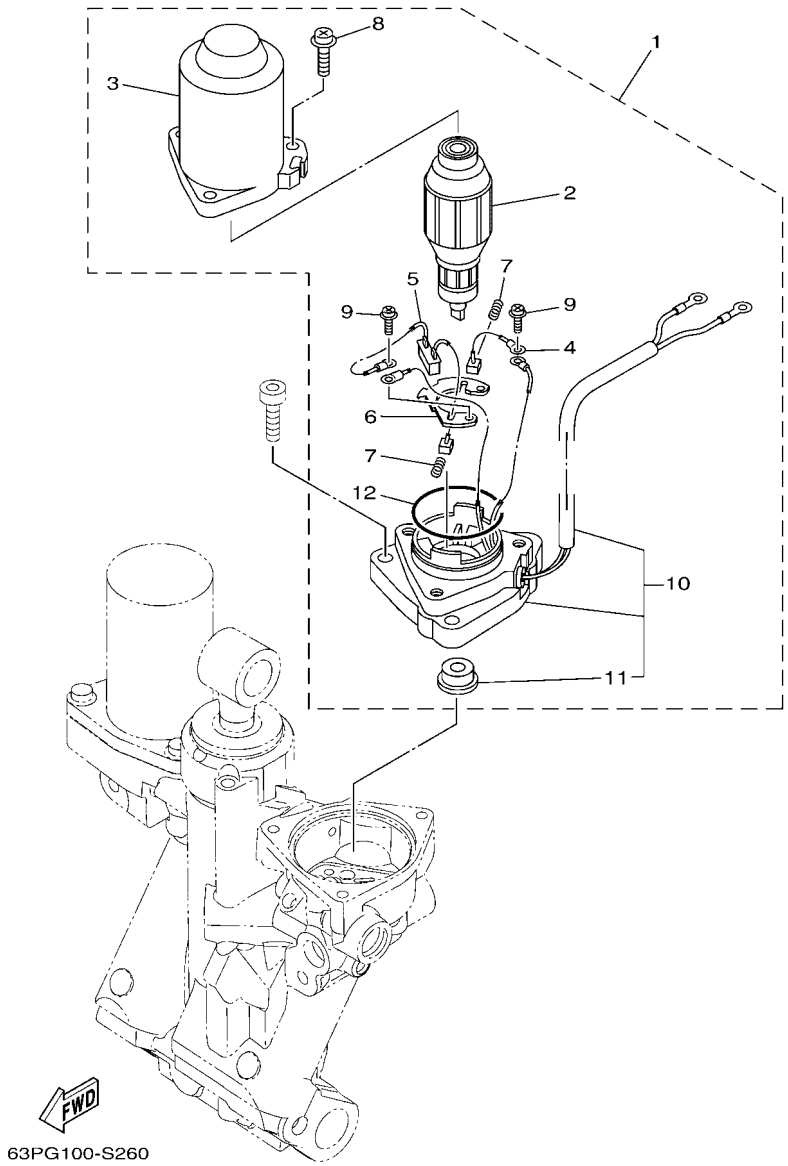

FIG. 22 POWER TRIM & TILT ASSY 2 — COMPONER Y PODER VARILLA 2

REF. NO.	PART NO. CODIGO Nº	DESCRIPTION DESCRIPCION	60CN					REMARKS OBSERVACIONES
1	68V–43880–10	MOTOR ASSY MOTOR COMPL.	1					
2	6EK–43805–01	.ARMATURE ASSY .INDUCIDO COMPL.	1					
3	6EK–43804–11	.STATOR ASSY .ESTATOR COMPL	1					
4	6EK–43892–00	.BRUSH 2 .ESCOBILLA 2	1					
5	6EK–82181–00	.CIRCUIT BREAKER COMP. .RUPTOR DE CIRCUITO COMPL	1					
6	6EK–4380F–00	.PLATE, BRUSH HOLDER .PLACA	1					
7	62X–4386K–00	.SPRING, BRUSH .RESORTE, ESCOBILLA	2					
8	63P–43879–10	.SCREW, WITH WASHER .TORNILLO CON RONDANA	3					
9	97602–04316	.SCREW, PAN HEAD WITH WASHER .TORNILLO CON RONDONA	2					
10	68V–43881–10	.FRAME, END .CUADRO EXTERMO	1					
11	6EK–43882–00	..OIL SEAL ..SELLO ACEITE	1					
12	6EK–43862–00	.O-RING .ANILLO EN O 2	1					

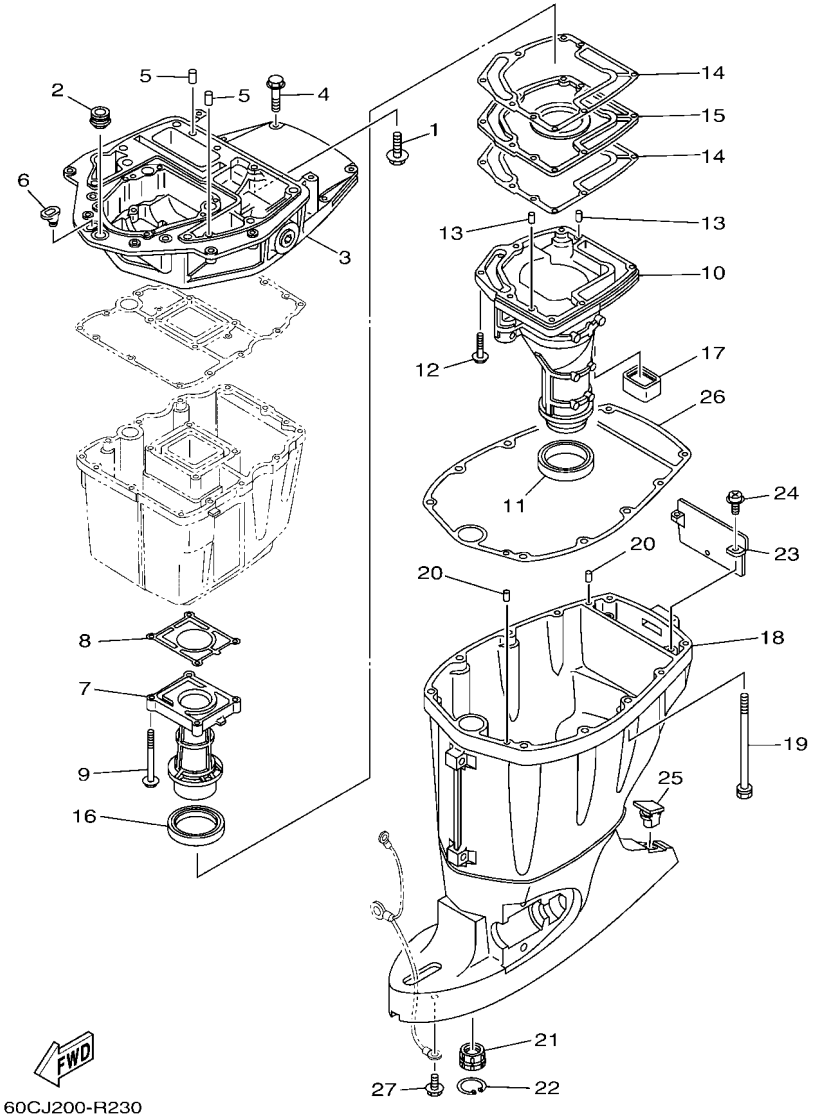

FIG. 23 UPPER CASING — FUNDA SUPERIOR

REF. NO.	PART NO. CODIGO Nº	DESCRIPTION DESCRIPCION	60CN					REMARKS OBSERVACIONES
1	90119–08189	BOLT, WITH WASHER TORNILLO CON ARANDELA	2					
2	67F–42724–01	GROMMET TAPON	1					
3	67F–41137–02–CA	GUIDE, EXHAUST GUIA DE ESCAPE	1					
4	97E75–08540	BOLT, HEXAGON W/W DEEP RECESS TORNILLO HEXAGONAL CON RONDONA	4					
5	93608–16M16	PIN, DOWEL PASADOR DE CLAVIJA	2					
6	6G1–42727–01	GROMMET TAPON	1					
7	60C–41131–01–9S	MANIFOLD, EXT. 1 TUBO MULTIPLE DE ESCAPE	1					
8	67F–41133–A1	GASKET, EXHAUST MANIFOLD 1 EMPAQUE ESCAPE MULTIPLE	1					
9	97E75–06570	BOLT, HEXAGON W/W DEEP RECESS TORNILLO HEXAGONAL CON RONDONA	4					
10	60C–14711–10–9S	MUFFLER 1 SILENCIADOR 1	1					L(20.3") L(20.3")
	60C–14711–30–9S	MUFFLER 1 SILENCIADOR 1	1					X(25.3") X(25.3")
11	68V–45123–00	GASKET, MUFFLER EMPAQUE SILENCIADOR	1					
12	97E75–06530	BOLT, HEXAGON W/W DEEP RECESS TORNILLO HEXAGONAL CON RONDONA	7					
13	93606–19M23	PIN, DOWEL PASADOR DE CLAVIJA	2					
14	67F–41134–A0	GASKET, EXHAUST MANIFOLD EMPAQUE	2					
15	67F–45181–00–CA	PLATE PLACA	1					
16	67F–41138–00	SEAL, EXT. 1 SELLO, ESCAPE 1	1					
17	67F–45127–00	SEAL SELLO DE GOMA	1					
18	68V–45111–11–8D	CASING, UPPER CAJA SUPERIOR	1					L(20.3") L(20.3")
	68V–45111–31–8D	CASING, UPPER CAJA SUPERIOR	1					X(25.3") X(25.3")
19	90119–10075	BOLT, WITH WASHER TORNILLO CON ARANDELA	6					
20	93608–16M16	PIN, DOWEL PASADOR DE CLAVIJA	2					
21	6E5–45318–00	BUSHING, DRIVE SHAFT BUJE, EJE DE MANDO	1					
22	93420–36M01	CIRCLIP SEGURO	1					
23	67F–45151–00	COVER, UPPER CASING CUBIERTA FUNDA SUPERIOR	1					
24	97980–06216	SCREW, WITH WASHER TORNILLO, CON ARANDELA	2					
25	6C5–45155–01	CAP TAPA	1					

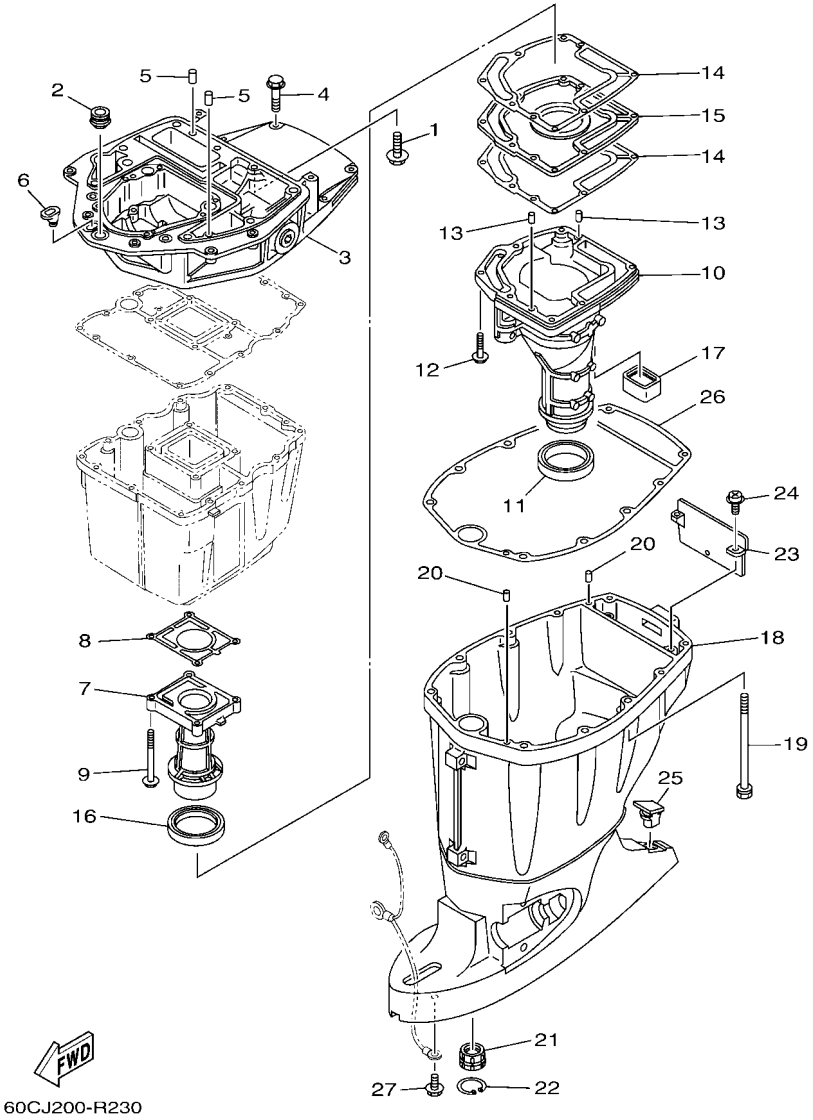

FIG. 23 UPPER CASING — FUNDA SUPERIOR

REF. NO.	PART NO. CODIGO Nº	DESCRIPTION DESCRIPCION	60CN					REMARKS OBSERVACIONES
26	67F–45113–00	GASKET, UPPER CASING EMPAQUE	1					
27	95D95–06010	BOLT, FLANGE DEEP RECESS CERROJO, REBORDE HUECO PROFUND	1					

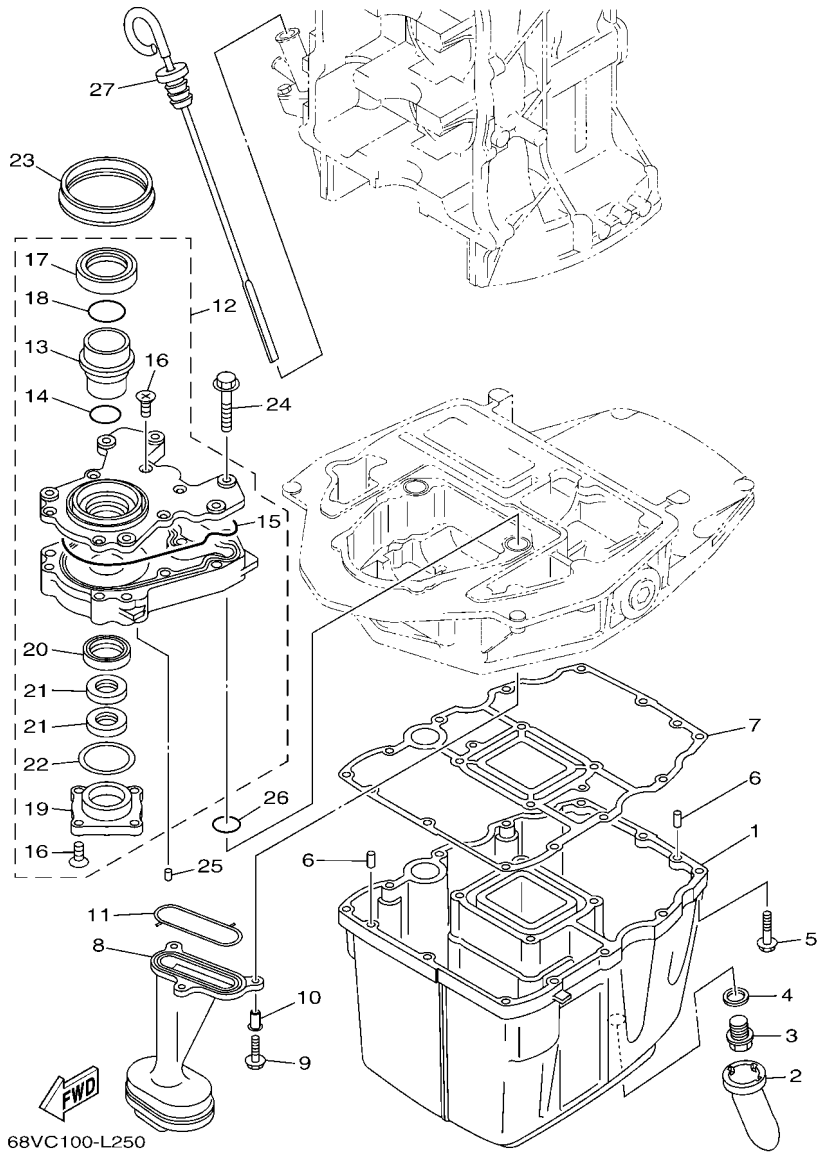

FIG. 24 OIL PAN

OIL PAN

REF. NO.	PART NO. CODIGO Nº	DESCRIPTION DESCRIPCION	60CN					REMARKS OBSERVACIONES
1	68V–15311–00–CA	OIL PAN BANDEJA DE ACEITE	1					
2	63P–15316–01	DAMPER 1 AMORTIGUADOR 1	1					
3	90340–14M06	PLUG, STRAIGHT SCREW TORNILLO, DE DRENAJE	1					
4	90430–14M09	GASKET JUNTA	1					
5	97E75–06525	BOLT, HEXAGON W/W DEEP RECESS TORNILLO HEXAGONAL CON RONDONA	12					
6	93606–12019	PIN, DOWEL PASADOR DE CLAVIJA	2					
7	68V–15312–00	GASKET, OIL PAN EMPAQ BANDEJA DE ACEITE	1					
8	67F–13411–00	STRAINER, OIL FILTRO DE ACEITE	1					
9	95812–06025	BOLT, FLANGE TORNILLO DE REBORDE	3					
10	90387–06263	COLLAR ESPACIADOR	3					
11	67F–13415–00	SEAL, OIL STRAINER SELLO COLADOR ACEITE	1					
12	67F–13300–10	OIL PUMP ASSY BOMBA DE ACEITE COMPLETA	1					
13	67F–13314–02	.SHAFT, PUMP .EJE DE BOMBA	1					
14	67F–13473–01	.O-RING .ANILLO O	1					
15	67F–13329–00	.GASKET, PUMP COVER .EMPAQUE TAPA DE BOMBA	1					
16	67F–13495–00	.SCREW .TORNILLO	10					
17	67F–13119–01	.OIL SEAL .SELLO ACEITE	1					
18	67F–13769–00	.O-RING .ANILLO O	1					
19	67F–13914–00	.HOUSING, PUMP .CAJA DE BOMBA	1					
20	67F–13631–03	.OIL SEAL .SELLO ACEITE	1					
21	67F–13149–00	.OIL SEAL .SELLO ACEITE	2					
22	67F–13339–00	.GASKET, PUMP COVER .EMPAQUETADURA, CUBIERTA BOMBA	1					
23	67F–13338–00	SEAL SELLO	1					
24	97E95–06545	BOLT, HEXAGON W/W DEEP RECESS TORNILLO HEXAGONAL CON RONDONA	6					
25	93604–12M07	PIN, DOWEL PASADOR DE CLAVIJA	2					
26	93210–19MJ1	O-RING ANILLO O	2					
27	6D8–15362–00	PLUG, OIL LEVEL TAPON DEL NIVEL DE ACEITE	1					

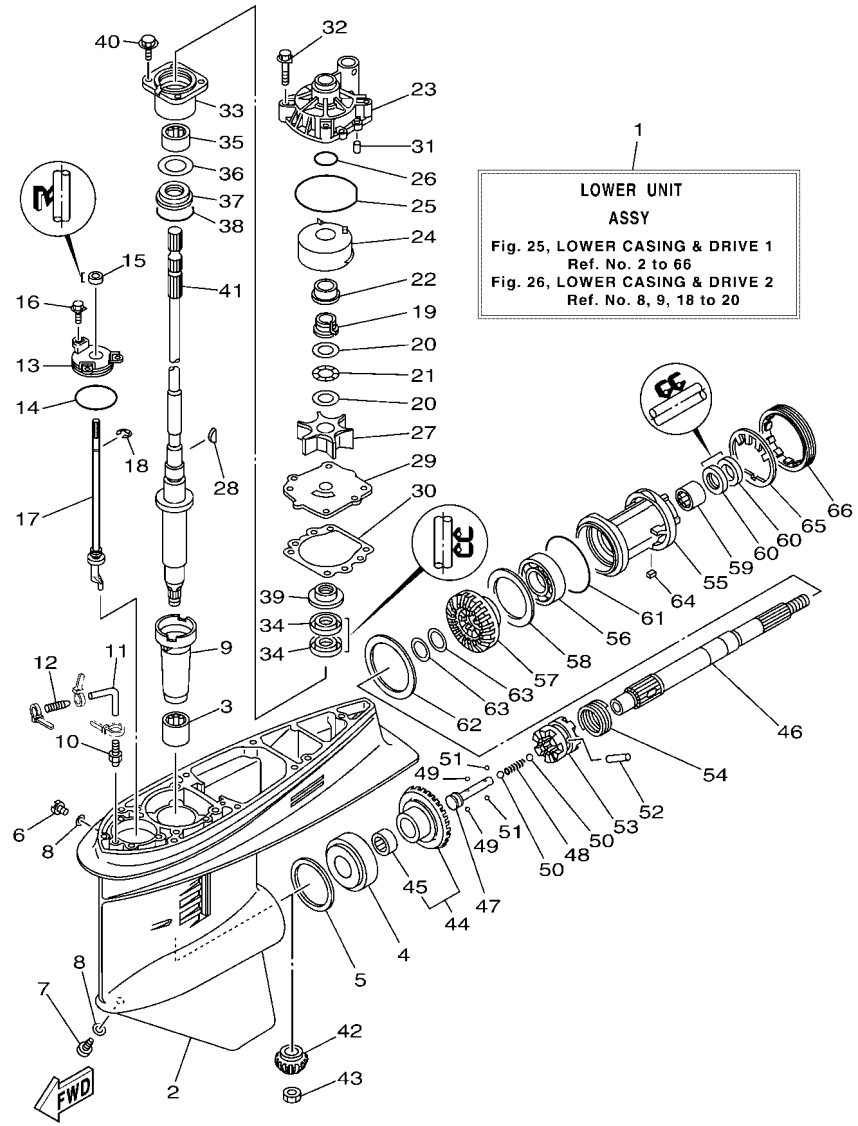

FIG. 25 LOWER CASING & DRIVE 1 — IMPULSOR E INFERIOR 1

REF. NO.	PART NO. CODIGO Nº	DESCRIPTION DESCRIPCION	60CN					REMARKS OBSERVACIONES
1	60C–45300–15–8D	LOWER UNIT ASSY CONJUNTO UNIDAD INFERIOR	1					L(20.3") L(20.3")
	60C–45300–35–8D	LOWER UNIT ASSY CONJUNTO UNIDAD INFERIOR	1					X(25.3") X(25.3")
2	6E5–45301–07–8D	CASING, LOWER FUNDA INFERIOR COMPLETA	1					
3	93315–628U9	BEARING COJINETE DE RODILLOS	1					
4	93332–000U7	BEARING COJINETE	1					
5	6E5–45567–01	SHIM (T:0.10MM) LAMINA(T:0.10MM)	1					UR UR
	6E5–45567–10	SHIM (T:0.12MM) LAINA (T:0.12MM)	1					UR UR
	6E5–45567–20	SHIM (T:0.15MM) LAINA (T:0.15MM)	1					UR UR
	6E5–45567–30	SHIM (T:0.18MM) LAINA (T:0.18MM)	1					UR UR
	6E5–45567–40	SHIM (T:0.30MM) LAINA (T:0.30MM)	1					UR UR
	6E5–45567–50	SHIM (T:0.40MM) LAINA (T:0.40MM)	1					UR UR
	6E5–45567–60	SHIM (T:0.50MM) LAINA (T:0.50MM)	1					UR UR
6	90340–08002	PLUG, STRAIGHT SCREW TORNILLO, DE DRENAJE	1					
7	688–45341–10	PLUG, DRAIN TAPON, DREN	1					
8	90430–08003	GASKET JUNTA	2					
9	6E5–45536–00	SLEEVE, DRIVE SHAFT CAMISA EJE DE MANDO	1					
10	6E5–45378–00	NIPPLE, HOSE NIPLE MANGUERA	1					
11	90445–07ME8	HOSE (L80) TUBO (L80)	1					L(20.3") L(20.3")
	90445–07ME9	HOSE (L120) TUBO (L120)	1					X(25.3") X(25.3")
12	6E5–83558–10	END, NIPPLE EXTREMO DE NIPLE	1					
13	6E5–45321–00	PLATE PLACA	1					
14	93210–58144	O-RING ANILLO O	1					
15	93106–09014	OIL SEAL SELLO ACEITE	1					
16	90119–06286	BOLT, WITH WASHER TORNILLO CON ARANDELA	3					
17	6L6–44150–02	SHIFT CAM ASSY CONJUNTO EJE LEVA COMPL.	1					
18	99001–08600	CIRCLIP PRESILLA REDONDA	1					
19	61A–45538–00	SPACER 1 ESPACIADOR 1	1					

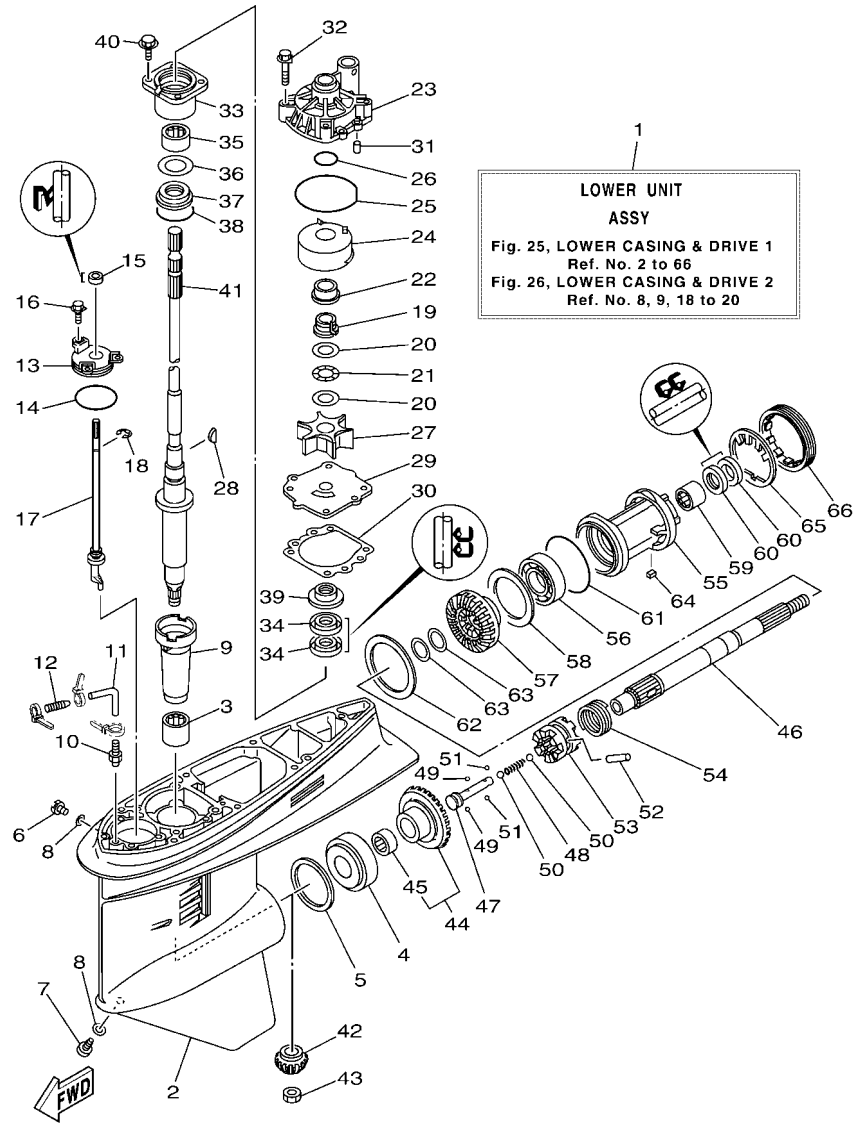

FIG. 25 LOWER CASING & DRIVE 1 — IMPULSOR E INFERIOR 1

REF. NO.	PART NO. CODIGO Nº	DESCRIPTION DESCRIPCION	60CN					REMARKS OBSERVACIONES
20	90201–22M01	WASHER, PLATE ARANDELA PLANA	2					
21	90206–22M19	WASHER, WAVE ARANDELA ONDULADA	1					
22	61A–45527–00	COLLAR, DRIVE SHAFT COLLAR EJE FLECHA DE PROPULSIO	1					
23	61A–44311–01	HOUSING, WATER PUMP CAJA BOMBA DE AGUA	1					
24	6R3–44322–42	INSERT, CARTRIDGE CARTUCHO	1					FOR CHROMATE FOR CHROMATE
25	93210–86M38	O-RING ANILLO O	1					
26	93210–37160	O-RING ANILLO O	1					
27	6E5–44352–01	IMPELLER IMPULSOR	1					
28	90280–04M05	KEY, WOODRUFF CUNA WOODRUFF	1					
29	60C–44323–40	OUTER PLATE, CARTRIDGE PLACA EXTERIOR DEL CARTUCHO	1					FOR CHROMATE FOR CHROMATE
30	6E5–44315–A0	GASKET, WATER PUMP EMPAQUE	1					
31	93606–12019	PIN, DOWEL PASADOR DE CLAVIJA	2					
32	90119–08191	BOLT, WITH WASHER TORNILLO CON ARANDELA	4					
33	6E5–45331–00–9S	HOUSING, BEARING CAJA DE COJINETE	1					
34	93101–28M16	OIL SEAL SELLO ACEITE	2					
35	93317–330U2	BEARING COJINETE	1					
36	6E5–45587–01	SHIM (T:0.10MM) LAINA (T:0.10MM)	1					UR UR
	6E5–45587–10	SHIM (T:0.12MM) LAINA (T:0.12MM)	1					UR UR
	6E5–45587–20	SHIM (T:0.15MM) LAINA (T:0.15MM)	1					UR UR
	6E5–45587–30	SHIM (T:0.18MM) LAINA (T:0.18MM)	1					UR UR
	6E5–45587–40	SHIM (T:0.30MM) LAINA (T:0.30MM)	1					UR UR
	6E5–45587–50	SHIM (T:0.40MM) LAINA (T:0.40MM)	1					UR UR
	6E5–45587–60	SHIM (T:0.50MM) LAINA (T:0.50MM)	1					UR UR
37	93341–930V2	BEARING COJINETES CON RODAMIENTOS	1					
38	93210–55M14	O-RING ANILLO O	1					
39	6E5–45344–00	COVER, OIL SEAL CUBIERTA SELLO ACEITE	1					
40	97E95–08525	BOLT, HEXAGON W/W DEEP RECESS TORNILLO HEXAGONAL CON RONDONA	4					

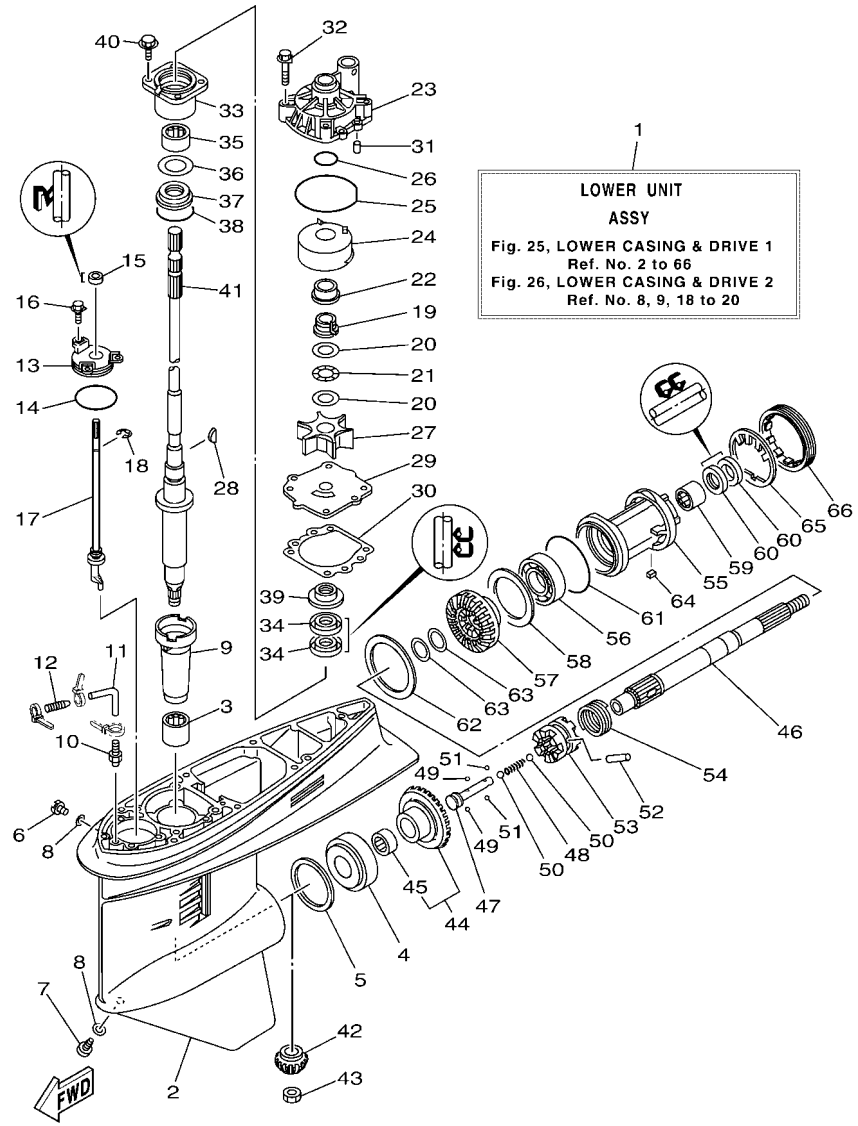

60CJ200-R250

FIG. 25 LOWER CASING & DRIVE 1 — IMPULSOR E INFERIOR 1

REF. NO.	PART NO. CODIGO Nº	DESCRIPTION DESCRIPCION	60CN					REMARKS OBSERVACIONES
41	68V–45501–10	DRIVE SHAFT COMP. EJE DE MANDO COMPL.	1					L(20.3") L(20.3")
	68V–45501–30	DRIVE SHAFT COMP. EJE DE MANDO COMPL.	1					X(25.3") X(25.3")
42	68V–45551–00	PINION (13T) PINON (13T)	1					
43	90170–16M01	NUT TUERCA	1					
44	68V–45560–00	GEAR 1 (28T) ENGRANAJE 1 (28T)	1					
45	93315–425U7	.BEARING .COJINETE DE RODILLOS	1					
46	6E5–45611–01	SHAFT, PROPELLER EJE PROPUSOR	1					
47	6E5–45634–02	SLIDE, SHIFT DESLIZADOR, CAMBIO	1					
48	90501–16M37	SPRING, COMPRESSION RESORTE DE COMPRESION	1					
49	93507–32009	BALL ESFERA	2					
50	93511–32017	BALL ESFERA	2					
51	93503–16003	BALL ESFERA	2					
52	90250–08M07	PIN, STRAIGHT PASADOR CILINDRICO	1					
53	68V–45631–02	CLUTCH, DOG EMBRAGUE DE GARRA	1					
54	6E5–45633–01	RING, CROSS PIN ANILLO DE PASADOR	1					
55	6E5–45332–00–CA	HOUSING, BEARING CAJA BALERO 2	1					
56	93306–208U0	BEARING COJINETE	1					
57	68V–45571–00	GEAR 2 (28T) ENGRANAJE 2 (28T)	1					
58	6E5–45576–00	WASHER, THRUST 2 ARANDELA DE EMPUJE AXIAL 2	1					
59	93315–430U8	BEARING COJINETE DE RODILLOS	1					
60	93101–30M17	OIL SEAL SELLO ACEITE	2					
61	93210–86M39	O-RING ANILLO O	1					
62	6L6–45577–00	SHIM (T:0.10MM) LAINA (T:0.10MM)	1					UR UR
	6L6–45577–10	SHIM (T:0.12MM) LAINA (:0.12MM)	1					UR UR
	6L6–45577–20	SHIM (T:0.15MM) LAINA (T:0.15MM)	1					UR UR
	6L6–45577–30	SHIM (T:0.18MM) LAINA (T:0.18MM)	1					UR UR
	6L6–45577–40	SHIM (T:0.30MM) LAINA (T:0.30MM)	1					UR UR

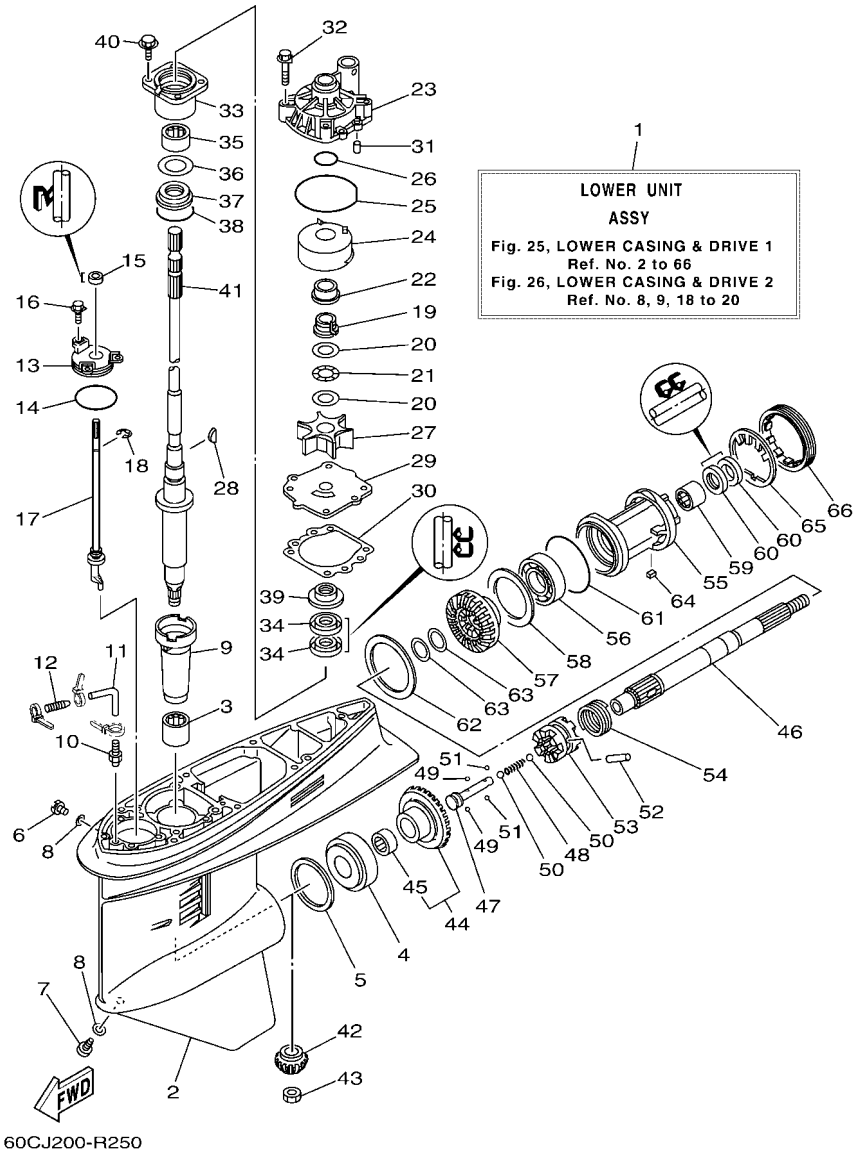

FIG. 25 LOWER CASING & DRIVE 1 — IMPULSOR E INFERIOR 1

REF. NO.	PART NO. CODIGO Nº	DESCRIPTION DESCRIPCION	60CN					REMARKS OBSERVACIONES
62	6L6–45577–50	SHIM (T:0.40MM) LAINA (T:0.40MM)	1					UR UR
	6L6–45577–60	SHIM (T:0.50MM) LAINA (T:0.50MM)	1					UR UR
63	90201–30M92	WASHER, PLATE ARANDELA PLANA	2					
64	90282–04010	KEY, STRAIGHT CHAVETA, RECTA	1					
65	688–45383–02	WASHER, CLAW ARANDELA DE UNA	1					
66	688–45384–02	NUT TUERCA	1					

FIG. 26 LOWER CASING & DRIVE 2 — IMPULSOR E INFERIOR 2

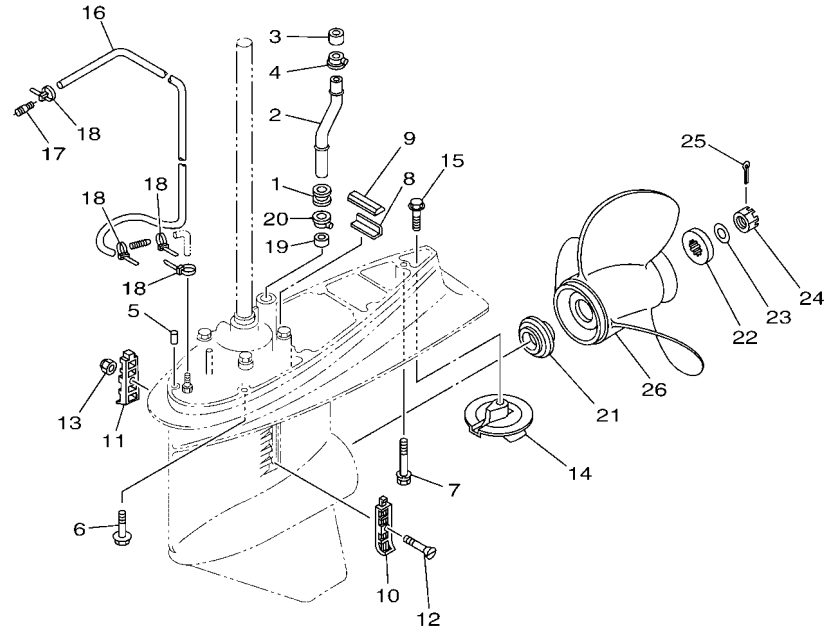

6S0B010-N300

REF. NO.	PART NO. CODIGO Nº	DESCRIPTION DESCRIPCION	60CN					REMARKS OBSERVACIONES
1	6E5–44366–01	DAMPER, WATER SEAL 2 GOMA DEL SELLO DE AGUA 2	1					
2	6BC–44361–10	TUBE, WATER 1 TUBO DE AGUA 1	1					L(20.3") L(20.3")
	6BC–44361–30	TUBE, WATER 1 TUBO DE AGUA 1	1					X(25.3") X(25.3")
3	6E5–44365–01	DAMPER, WATER SEAL 1 HULE DE SELLO DE AGUA 1	1					
4	6E5–44312–00	COVER, WATER PUMP HOUSING CUBIERTA CAJA BOMBA DE AGUA	1					
5	93608–12M05	PIN, DOWEL PASADOR DE CLAVIJA	2					
6	97E95–10545	BOLT, HEXAGON W/W DEEP RECESS TORNILLO HEXAGONAL CON RONDONA	6					
7	90119–10071	BOLT, WITH WASHER TORNILLO CON ARANDELA	1					
8	663–45376–00	GUIDE, SEAL DAMPER GUIA DE SELLO GOMA	1					
9	688–45375–00	DAMPER, SEAL GOMA DE SELLO	1					
10	688–45214–02	COVER, WATER INLET 1 CUBIERTA, ENTRADA AGUA 1	1					
11	688–45215–02	COVER, WATER INLET 2 CUBIERTA, ENTRADA AGUA 2	1					
12	90152–05M07	SCREW, COUNTERSUNK TORNILLO EMBUTIDO	1					
13	90185–05002	NUT, NYLON TUERCA AUTOBLOCANTE	1					
14	6E5–45371–01	TAB-TRIM QUILLA ESTABILIZADOR	1					
15	90105–10M00	BOLT, FLANGE TORNILLO	1					
16	90445–076K2	HOSE (L1550) MANGUERA (L1550)	1					
17	6E5–83558–00	END, NIPPLE EXTREMO DE NIPLE	1					
18	90465–11M10	CLAMP BRIDA	4					
19	6E5–44365–01	DAMPER, WATER SEAL 1 HULE DE SELLO DE AGUA 1	1					
20	6E5–44312–00	COVER, WATER PUMP HOUSING CUBIERTA CAJA BOMBA DE AGUA	1					
21	63P–45987–00	SPACER 1 ESPACIADOR 1	1					
22	688–45997–01	SPACER 2 ESPACIADOR 2	1					
23	92990–18200	WASHER ARANDELA PLANA	1					
24	90171–18M04	NUT, CASTLE TUERCA ENTALLADA	1					
25	91490–40030	PIN. COTTER CHAVETA	1					
26	6E5–45947–00	PROPELLER (3X13-1/2"X15"-K) PROPELA (3X13-1/2"X15"-K)	1					UR UR

FIG. 26 LOWER CASING & DRIVE 2 — IMPULSOR E INFERIOR 2

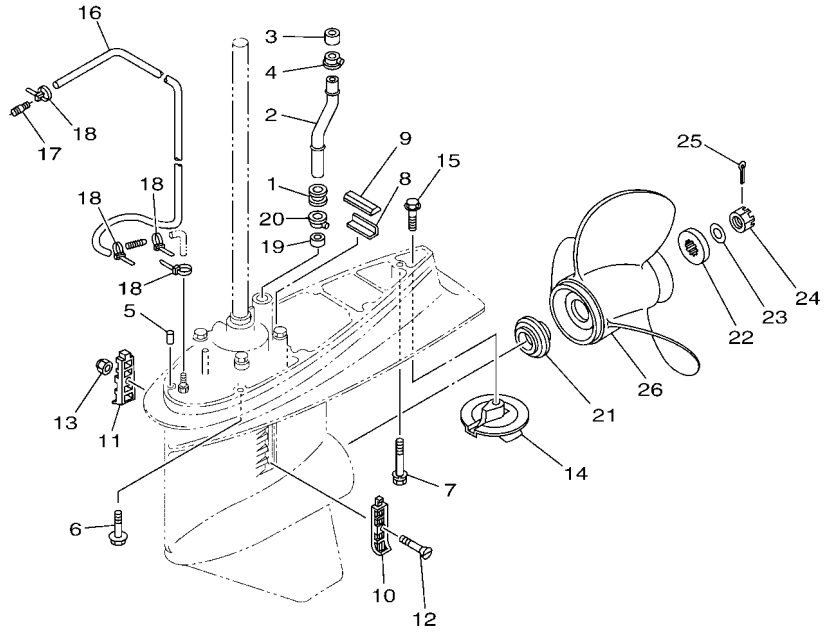

6S0B010-N300

REF. NO.	PART NO. CODIGO Nº	DESCRIPTION DESCRIPCION	60CN					REMARKS OBSERVACIONES
26	688–45930–02	PROPELLER (3X13"X17"-K2) PROPELA (3X13"X17"-K2)	1					UR UR
	6E5–45945–01	PROPELLER (3X13-1/4"X17"-K) PROPELA (3X13-1/4"X17"-K)	1					UR UR

FIG. 27 STEERING GUIDE — DIRECCIONGUIAR

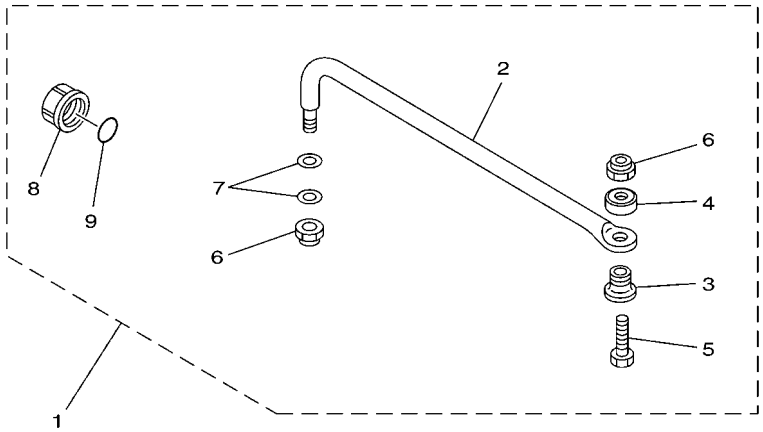

67H0100-9290

REF. NO.	PART NO. CODIGO Nº	DESCRIPTION DESCRIPCION	60CN					REMARKS OBSERVACIONES
1	6E5–61350–02	STEERING GUIDE ATTACHMENT KIT ESTUCHE ADITAMENTO GUIA DE TIM	1					AP AP
2	6E5–61351–01	.ROD, STEERING LINK .VARILLA ESLABON DIRECCION	1					
3	90387–10M61	.COLLAR .ESPACIADOR	1					
4	90560–12M01	.SPACER .SEPARADOR	1					
5	6E5–61355–00	.BOLT .TORNILLO	1					
6	90185–09M01	.NUT, SELF-LOCKING .TUERCA AUTOBLOCANTE	2					
7	90201–10M20	.WASHER, PLATE .ARANDELA PLANA	2					
8	6E5–43145–01	.CAP, CLAMP BRACKET .TAPA	1					
9	93210–16275	.O-RING .ANILLO O	1					

FIG. 28 REMOTE CONTROL BOX — CONTROL REMOTO COMPLETO

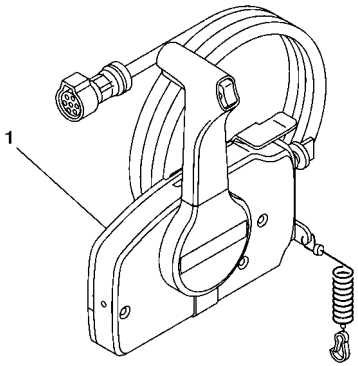

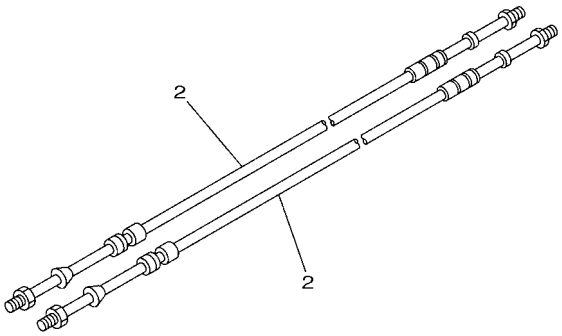

63PD370-P320

REF. NO.	PART NO. CODIGO Nº	DESCRIPTION DESCRIPCION	60CN					REMARKS OBSERVACIONES
1	703–48205–B3	REMOTE CONTROL ASSY (10P, PTT) REMOTO CONTROL COMPL. (10P)	1					AP EXCEPT CAR,CAR(CE) WITH PT/T SW. AP EXCEPT CAR,CAR(CE) WITH PT/T SW.
	703–48205–23	REMOTE CONTROL ASSY (10P, PTT) REMOTO CONTROL COMPL. (10P)	1					AP CAR,CAR(CE) WITH PT/T SW. AP CAR,CAR(CE) WITH PT/T SW.
2	701–48350–10	CABLE, REMOTE CONTROL L=22F CABLE CONTROL REMOTO L=22F	2					

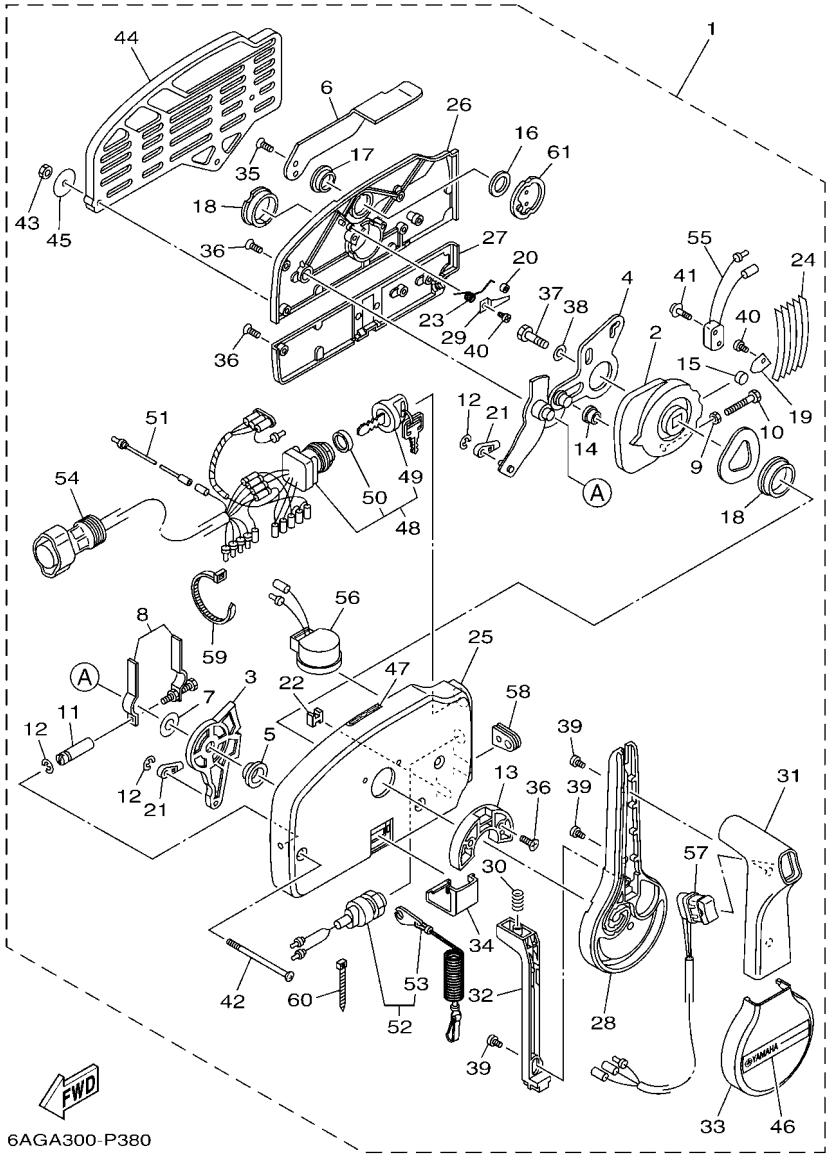

FIG. 29 REMOTE CONTROL ASSY — CONTROL REMOTO COMPL

REF. NO.	PART NO. CODIGO Nº	DESCRIPTION DESCRIPCION	60CN					REMARKS OBSERVACIONES
1	703–48205–B3	REMOTE CONTROL ASSY (10P, PTT) REMOTO CONTROL COMPL. (10P)	1					AP EXCEPT CAR,CAR(CE) WITH PT/T SW. AP EXCEPT CAR,CAR(CE) WITH PT/T SW.
	703–48205–23	REMOTE CONTROL ASSY (10P, PTT) REMOTO CONTROL COMPL. (10P)	1					AP CAR,CAR(CE) WITH PT/T SW. AP CAR,CAR(CE) WITH PT/T SW.
2	703–48232–00	.GEAR .ENGRANAJE 1	1					
3	703–48271–00	.ARM, SHIFT .BRAZO CAMBIADOR	1					
4	703–48261–01	.ARM, THROTTLE .BRAZO ACELERADOR	1					
5	703–48235–00	.BUSHING .BUJE	1					
6	703–48152–10	.KNOB, FREE ACCEL. .PERILLA	1					
7	703–48268–00	.SPACER .ESPACIADOR 3	1					
8	703–48264–00	.FRICTION, THROTTLE .FRICCION DE ACELERADOR	1					
9	95380–05600	.NUT .TUERCA	1					
10	97380–05025	.BOLT .TORNILLO HEXAGONAL	1					
11	703–48265–10	.SHAFT, FRICTION .EJE FRICCION	1					
12	93430–06024	.CIRCLIP .SEGURO	3					
13	703–48245–00	.PLATE, LOCK .PLACA CERRADURA	1					
14	703–48252–00	.ROLLER, CAM .RODILLO LEVA	1					
15	701–48248–00	.ROLLER, FREE ACCEL. .RODILLO ACELERADOR LIBRE	1					
16	703–48198–00	.WASHER, WAVE .RONDANA ONDULADA 3	1					
17	703–48243–00	.BUSHING .BUJE 3	1					
18	703–48236–00	.BUSHING 1 .BUJE	2					
19	703–48189–00	.RETAINER .RETENEDOR	1					
20	703–48234–00	.ROLLER, DETENT .RODILLO	1					
21	703–48345–01	.CABLE END, REMOTE CONTROL 2 .TERMINAL CABLE DE CONTROL REMO	2					
22	703–48358–01	.ANCHOR, CABLE .ABRAZADERA CABLE	1					
23	703–48244–00	.SPRING, FREE ACCEL. .RESORTE ACELERADOR LIBRE	1					
24	703–48238–00	.SPRING, DETENT .RESORTE	5					
25	703–48211–10	.HOUSING,1 .CAJA	1					
26	703–48212–10	.BACK PLATE 1 .PLACA TRASERA 1	1					

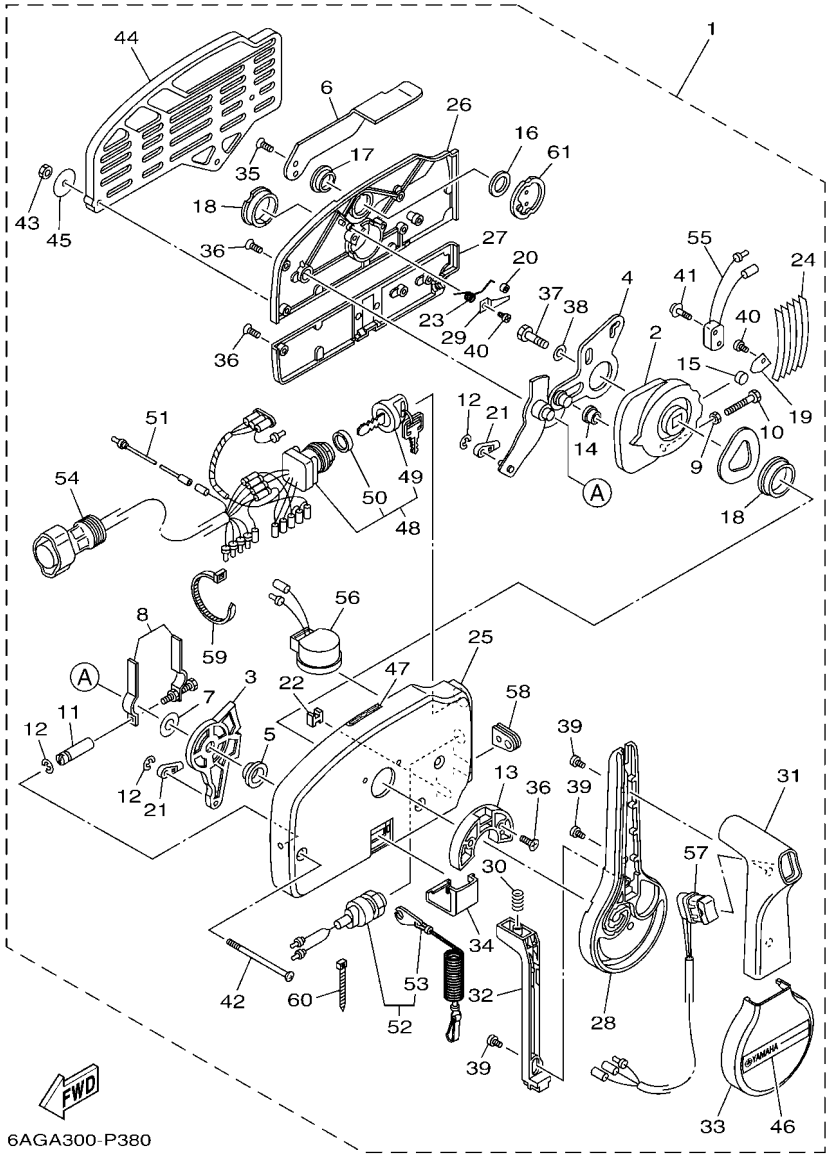

FIG. 29 REMOTE CONTROL ASSY — CONTROL REMOTO COMPL

REF. NO.	PART NO. CODIGO Nº	DESCRIPTION DESCRIPCION	60CN					REMARKS OBSERVACIONES
27	703–48213–10	.BACK PLATE 2 .PLACA TRASERA 2	1					
28	703–48221–10	.LEVER, CONTROL .PALANCA CONTROL	1					
29	703–48246–00	.SPACER .ESPACIADOR	1					
30	703–48227–00	.SPRING, NEUTRAL LOCK .RESORTE DE SEGURO	1					
31	703–48222–20	.GRIP, CONTROL LEVER .MANGO DE PALANCA CONTROL	1					SINGLE SINGLE
32	703–48223–10	.LOCK, NEUTRAL .CERRADURA NEUTRO	1					
33	703–48225–10	.COVER .CUBIERTA	1					
34	703–48219–10	.COVER, LEAD .CUBIERTA	1					
35	703–48281–00	.SCREW .TORNILLO 1	2					
36	703–44189–20	.SCREW .TORNILLO	7					
37	97380–08030	.BOLT .TORNILLO HEXAGONAL	1					
38	92990–08600	.WASHER, PLATE .ARANDELA PLANA	1					
39	703–48128–10	.SCREW 2 .TORNILLO 2	3					
40	98580–04006	.SCREW, PAN HEAD .TORNILLO DE CABEZA CRUZADA	2					
41	703–48129–00	.SCREW 3 .TORNILLO 3	2					
42	703–44189–30	.SCREW .TORNILLO	3					
43	95380–06600	.NUT, HEXAGON .TUERCA	3					
44	703–48293–10	.SPACER, REMOTE CONTROL .ESPACIADOR	1					SINGLE SINGLE
45	701–48287–00	.WASHER .ARANDELA	3					
46	703–48215–11	.GRAPHIC .CALCOMANIA 1	1					
47	6X3–44191–00	.INDICATOR, SHIFT .INDICADOR DE CAMBIOS	1					
48	703–82510–14	.MAIN SWITCH ASSY .CONJUNTO DE LLAVE IGNICION	1					FOR 703-48205-B3 PRIME START FOR 703-48205-B3 PRIME START
	703–82510–45	.MAIN SWITCH ASSY .CONJUNTO DE LLAVE IGNICION	1					FOR 703-48205-23 FOR 703-48205-23
49	676–82577–01	..CAP, KEY ..TAPA	1					FOR 703-82510-14 FOR 703-82510-14
	703–82577–00	..CAP, KEY ..TAPA	1					FOR 703-82510-45 FOR 703-82510-45
50	703–82532–00	..CAP ..TAPA	1					FOR 703-82510-14 FOR 703-82510-14
	6K1–82532–00	..CAP ..TAPA	1					FOR 703-82510-45 FOR 703-82510-45

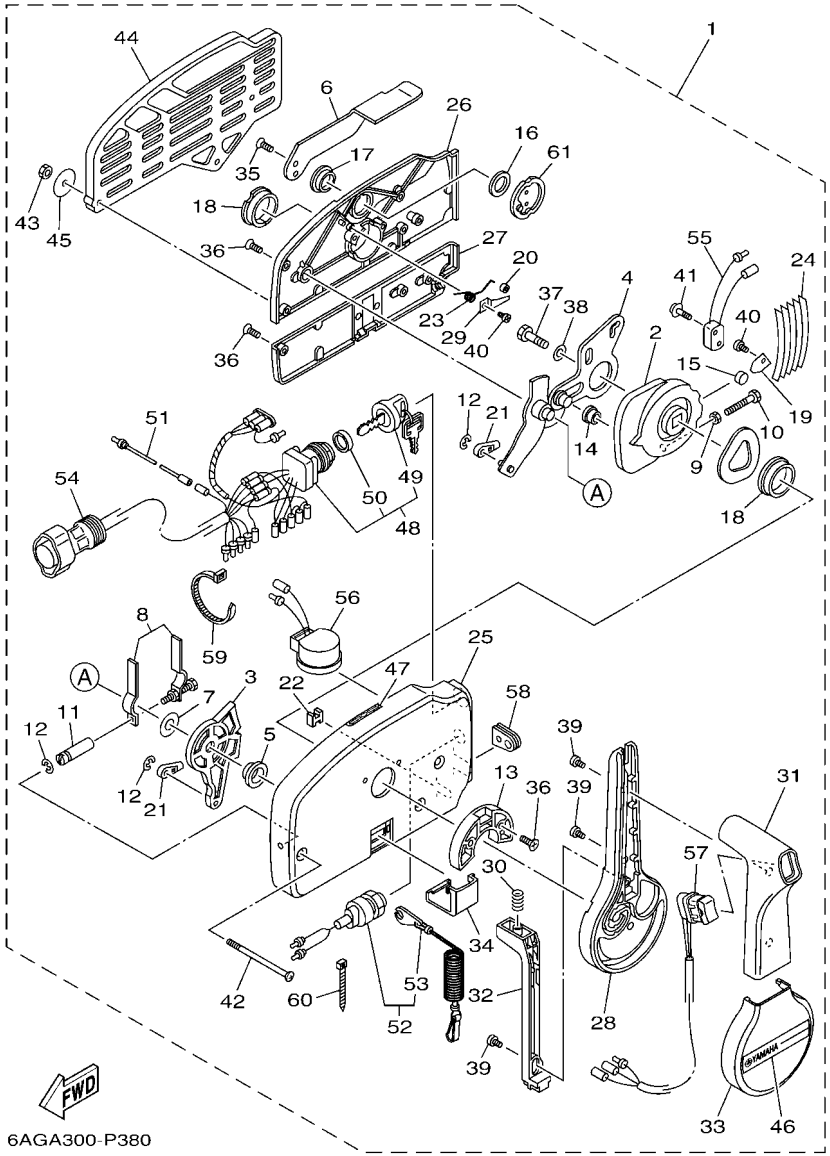

FIG. 29 REMOTE CONTROL ASSY — CONTROL REMOTO COMPL

REF. NO.	PART NO. CODIGO Nº	DESCRIPTION DESCRIPCION	60CN					REMARKS OBSERVACIONES
51	703–82531–00	.WIRE, LEAD (L70) .CABLE CONDUCTOR (L70)	1					
52	688–82575–02	.ENGINE STOP SWITCH ASSY .INTERRUPTOR DE PARADA COMPL	1					
53	682–82556–00	..LANYARD, STOP SWITCH ..CORDON DE INTERRUPTOR PARADA	1					
54	688–8258A–20	.EXTENSION, WIRE HARNESS (4.9M) .EXTENSION, ARNES DE CABLES (4.	1					(10P) (10P)
55	703–82540–00	.NEUTRAL SWITCH ASSY .INTERRUPTOR NEUTRAL COMPL	1					
56	703–83383–11	.BUZZER .ZUMBADOR	1					
57	703–82563–31	.TRIM & TILT SWITCH ASSY .INTERRUPTOR DE INCLINACION	1					
58	703–48284–00	.GROMMET .TAPON	1					
59	703–82591–00	.BAND .BANDA	1					
60	703–82592–00	.BAND .BANDA	1					
61	703–48153–00	.SHAFT, FREE ACCEL. .EJE	1					

FIG. 30 METER MEDIDOR

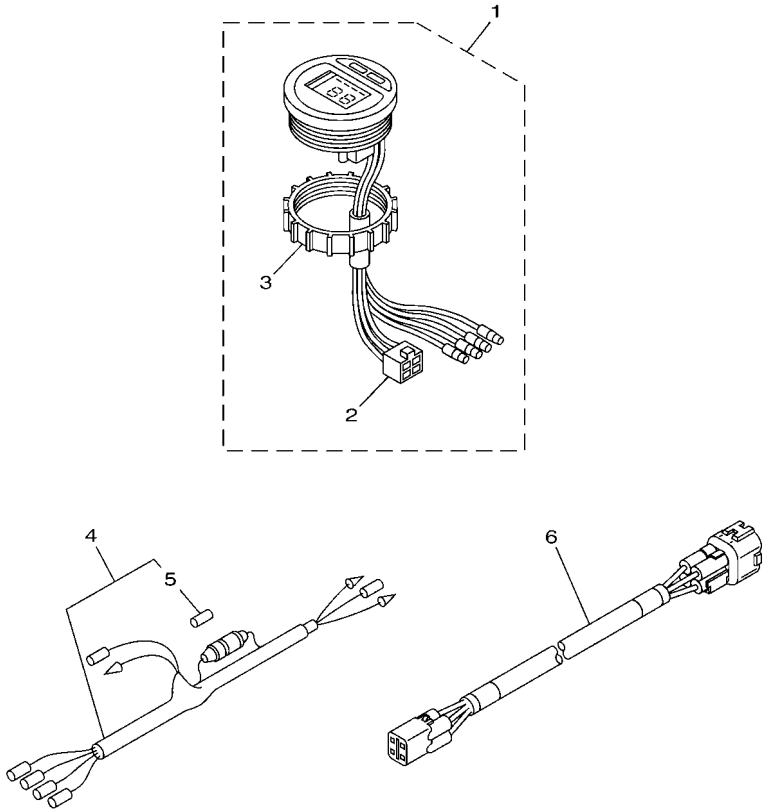

6DA5200-R460

REF. NO.	PART NO. CODIGO Nº	DESCRIPTION DESCRIPCION	60CN					REMARKS OBSERVACIONES
1	6Y5–8350T–E0	TACHOMETER ASSY TACOMETRO COMPLETO	1					AP AP
2	9E450–04533	.CONNECTOR .CONECTOR	1					F-4-W F-4-W
3	6Y8–84383–00	.NUT, RING .TUERCA ANILLO	1					
4	6Y5–83553–01	WIRE, LEAD (L=2.5M) CABLE CONDUCTOR (L=2.5M)	1					AP AP
5	6G1–82151–01	.FUSE (10A) .FUSIBLE (10A)	1					
6	6Y5–83653–20	WIRE, LEAD (L=7.0M) CABLE CONDUCTOR (L=7.0M)	1					AP EXCEPT FOR CHN 4P,7M AP EXCEPT FOR CHN 4P,7M
	6Y5–83653–30	WIRE, LEAD (L=8.0M) CABLE CONDUCTOR (L=8.0M)	1					AP FOR CHN 4P,8M AP FOR CHN 4P,8M

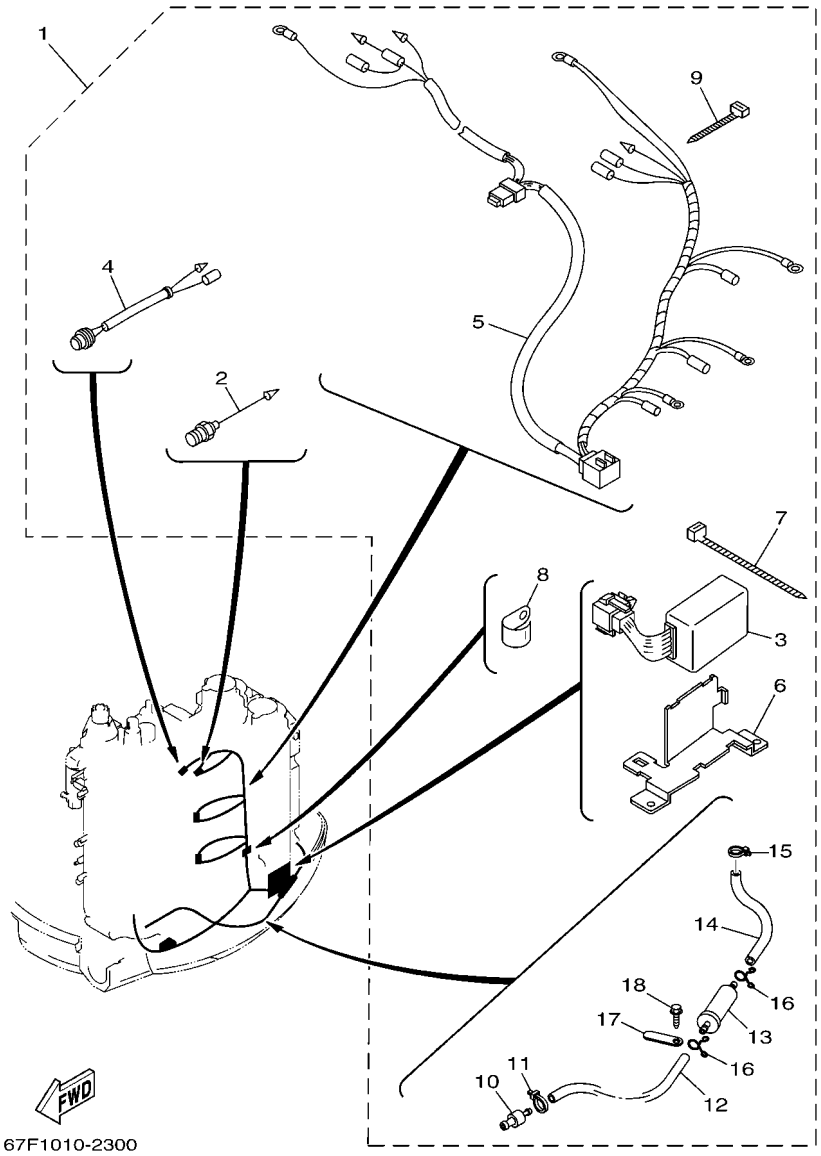

FIG. 31 OPTIONAL PARTS 1 — PARTES OPCIONALES 1

REF. NO.	PART NO. CODIGO Nº	DESCRIPTION DESCRIPCION	60CN					REMARKS OBSERVACIONES
1	67F–83790–12	HEATER ASSY CALENTADOR	1					
2	67F–83792–01	.HEATER .CALENTADOR	4					
3	67F–81930–00	.CONTROL UNIT ASSY .UNIDAD DE CONTROL COMPLETA	1					
4	67F–82560–00	.THERMO SWITCH ASSY .INTER. DE TERMO	1					
5	67F–81971–00	.WIRE, LEAD .CABLE CONDUCTOR	1					
6	67F–14291–00	.BRACKET 1 .SOPORTE 1	1					
7	90465–13M60	.CLAMP .BRIDA	3					
8	90465–08028	.CLAMP .BRIDA	2					
9	90465–13M36	.CLAMP .BRIDA	4					
10	67F–24377–00	.PIPE, JOINT 2 .TUBO DE UNION 2	1					
11	90465–11M10	.CLAMP .BRIDA	1					
12	90445–11M49	.HOSE (L700) .TUBO (L700)	1					
13	67F–24251–02	.STRAINER 1 .COLADOR 1	1					
14	67F–2451B–00	.HOSE, FUEL INLET .TUBO	1					
15	90465–11M10	.CLAMP .BRIDA	1					
16	90467–10M04	.CLIP .PRESILLA	2					
17	6E5–82588–00	.PLATE .PLACA	2					
18	90109–06M81	.BOLT .PERNO	2					

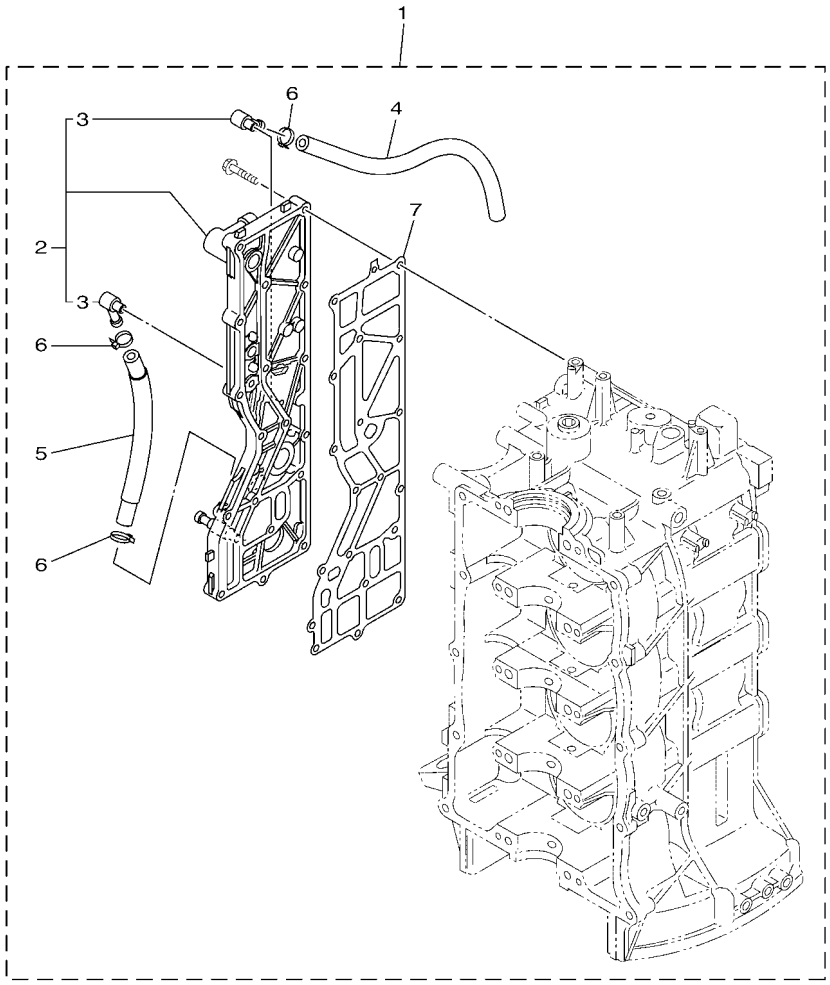

60CD300-L280

FIG. 32 OPTIONAL PARTS 2 — PARTES OPCIONALES 2

REF. NO.	PART NO. CODIGO Nº	DESCRIPTION DESCRIPCION	60CN					REMARKS OBSERVACIONES
1	60C–41190–10	ICE FREE KIT, PILOT WATER KIT DE NO HELADA, PILOTO AGUA	1					
2	67F–41113–61–9S	.OUTER COVER, EXHAUST .CUBOERTA EXTERIOR DE ESCAPE	1					
3	676–11372–00	..NIPPLE, HOSE ..NIPLE DE MANGUERA	2					
4	68V–42541–20	.PIPE 1 .TUBO 1	1					
5	60C–12484–00	.PIPE 4 .TUBO 4	1					
6	90465–11M10	.CLAMP .BRIDA	3					
7	67F–41114–A2	.GASKET, EXHAUST OUTER COVER .EMPAQUE	1					

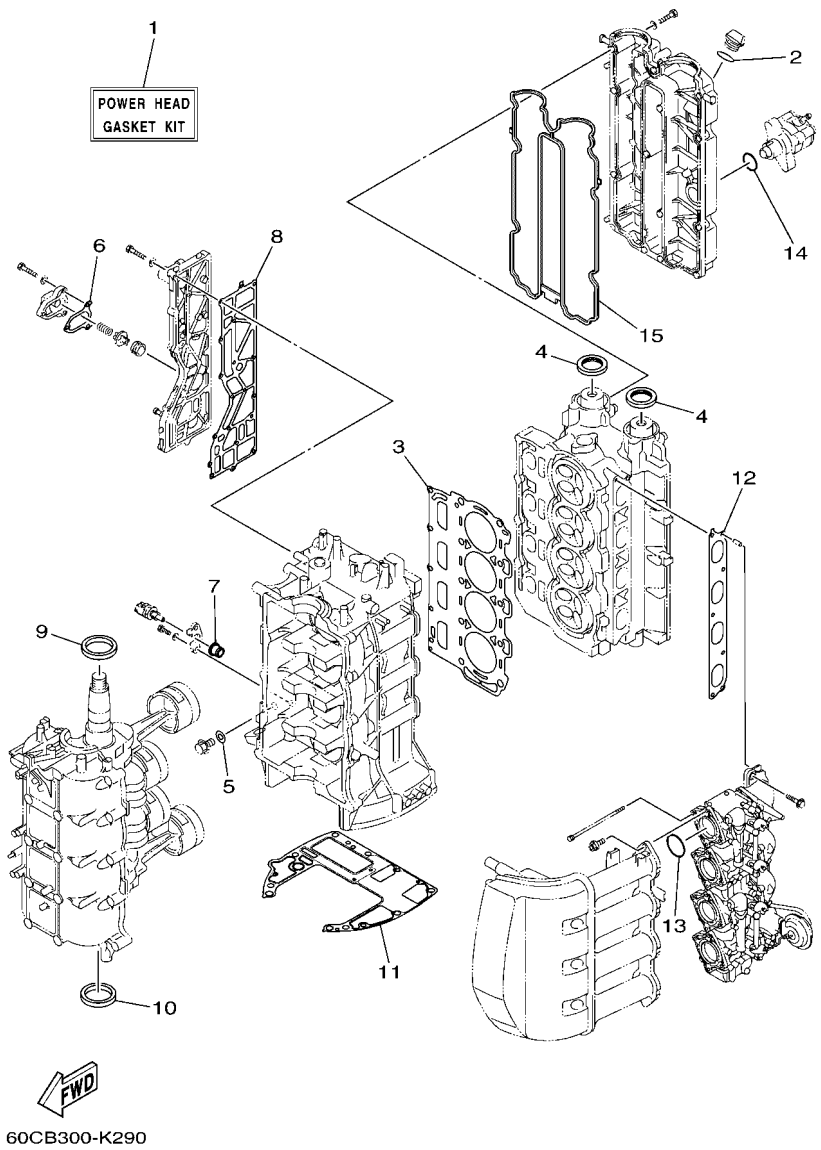

FIG. 33 REPAIR KIT 1 — ESTUCHE REPARATION 1

REF. NO.	PART NO. CODIGO Nº	DESCRIPTION DESCRIPCION	60CN					REMARKS OBSERVACIONES
1	60C–W0001–04	POWER HEAD GASKET KIT JUEGO DE EMPAQUE DE MOTOR	1					
2	93210–24M79	.O-RING .ANILLO O	1					
3	67F–11181–03	.GASKET, CYLINDER HEAD 1 .JUNTA, DE CULATA 1	1					
4	93102–38008	.OIL SEAL .SELLO ACEITE	2					
5	90430–14115	.GASKET .JUNTA	1					
6	67F–12435–A0	.GASKET .EMPAQUE	1					
7	68V–85753–00	.GASKET, SENDER UNIT .EMPAQUE DE UNIDAD TRANSMISORA	1					
8	67F–41114–A2	.GASKET, EXHAUST OUTER COVER .EMPAQUE	1					
9	93102–48008	.OIL SEAL .SELLO ACEITE	1					
10	93101–48001	.OIL SEAL .SELLO ACEITE	1					
11	68V–11351–00	.GASKET, CYLINDER .JUNTA, DE CILINDRO	1					
12	67F–13645–00	.GASKET, MANIFOLD 1 .EMPAQUE	1					
13	93210–41MJ2	.O-RING .ANILLO O	4					
14	93210–30682	.O-RING .ANILLO O	1					
15	6D8–11356–01	.SEAL, CYLINDER 2 .RETEN ACEITE CILINDRO 2	1					

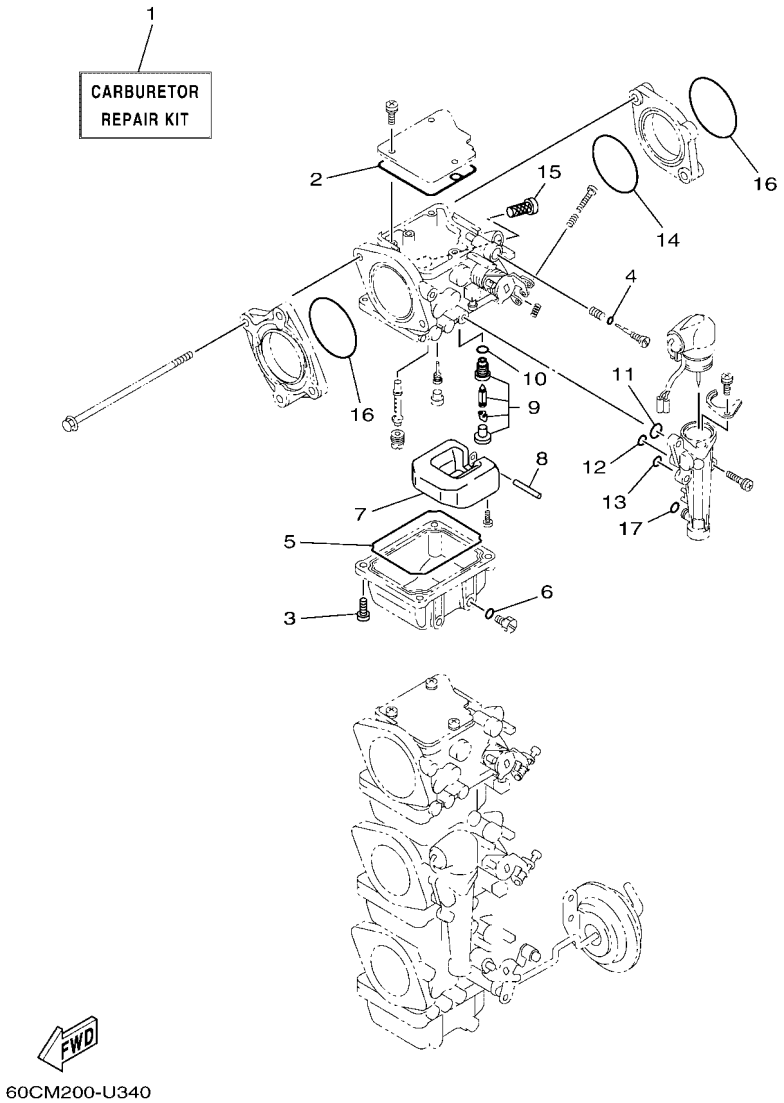

60CM200-U340

FIG. 34 REPAIR KIT 2 — ESTUCHE REPARATION 2

REF. NO.	PART NO. CODIGO Nº	DESCRIPTION DESCRIPCION	60CN					REMARKS OBSERVACIONES
1	67F–W0093–02	CARBURETOR REPAIR KIT KIT REPARACION CARBURADOR	1					
2	67F–14147–00	.GASKET .EMPAQUE	1					
3	97980–04114	.SCREW, WITH WASHER .TORNILLO, CON ARANDELA	4					
4	67F–14397–00	.O-RING .ANILLO O	1					
5	67F–14984–00	.GASKET, FLOAT CHAMBER .EMPAQUE CAMARA DE BOIA	1					
6	93210–04230	.O-RING .ANILLO O	1					
7	6H4–14985–01	.FLOAT .BOIA	1					
8	6H4–14548–00	.PIN, FLOAT ARM .PASADOR DE BRAZO DE BOIA	1					
9	60C–14590–02	.NEEDLE VALVE ASSY .VALVULA DE AGUJA COMPLETA	1					
10	93210–04228	.O-RING .ANILLO O	1					
11	67F–14398–00	.O-RING .ANILLO O	1					
12	67F–14398–10	.O-RING .ANILLO O	1					
13	67F–14398–20	.O-RING .ANILLO O	1					
14	67F–14239–00	.SEAL .SELLO	1					
15	67F–14371–01	.ELEMENT, FILTER .ELEMENTO DEL FILTRO	1					
16	93210–40M10	.O-RING .ANILLO O	2					
17	67F–14398–30	.O-RING .ANILLO O	1					

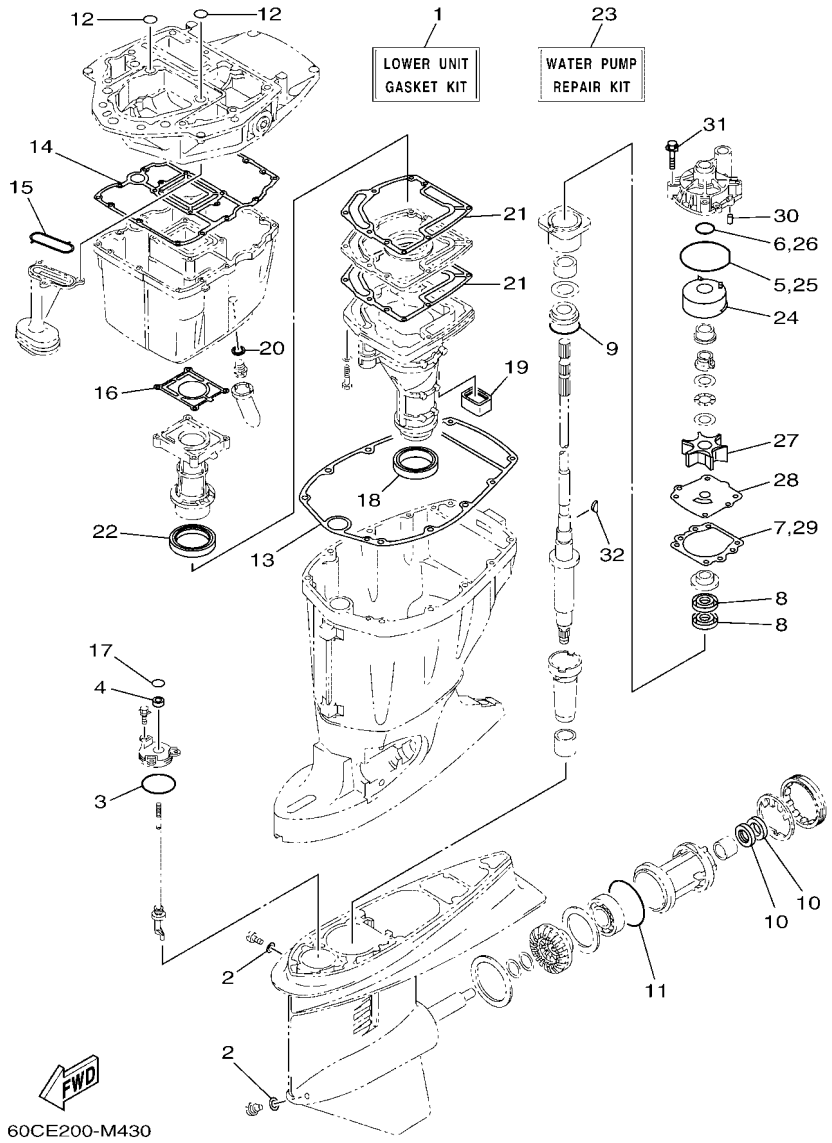

FIG. 35 REPAIR KIT 3 — ESTUCHE REPARATION 3

REF. NO.	PART NO. CODIGO Nº	DESCRIPTION DESCRIPCION	60CN					REMARKS OBSERVACIONES
1	68V–W0001–21	LOWER UNIT GASKET KIT JUEGO DE EMPAQUE UNIDAD INFER.	1					
2	90430–08003	.GASKET .JUNTA	2					
3	93210–58144	.O-RING .ANILLO O	1					
4	93106–09014	.OIL SEAL .SELLO ACEITE	1					
5	93210–86M38	.O-RING .ANILLO O	1					
6	93210–37160	.O-RING .ANILLO O	1					
7	6E5–44315–A0	.GASKET, WATER PUMP .EMPAQUE	1					
8	93101–28M16	.OIL SEAL .SELLO ACEITE	2					
9	93210–55M14	.O-RING .ANILLO O	1					
10	93101–30M17	.OIL SEAL .SELLO ACEITE	2					
11	93210–86M39	.O-RING .ANILLO O	1					
12	93210–19MJ1	.O-RING .ANILLO O	2					
13	67F–45113–00	.GASKET, UPPER CASING .EMPAQUE	1					
14	68V–15312–00	.GASKET, OIL PAN .EMPAQ BANDEJA DE ACEITE	1					
15	67F–13415–00	.SEAL, OIL STRAINER .SELLO COLADOR ACEITE	1					
16	67F–41133–A1	.GASKET, EXHAUST MANIFOLD 1 .EMPAQUE ESCAPE MULTIPLE	1					
17	93210–09165	.O-RING .ANILLO O	1					
18	68V–45123–00	.GASKET, MUFFLER .EMPAQUE SILENCIADOR	1					
19	67F–45127–00	.SEAL .SELLO DE GOMA	1					
20	90430–14M09	.GASKET .JUNTA	1					
21	67F–41134–A0	.GASKET, EXHAUST MANIFOLD .EMPAQUE	2					
22	67F–41138–00	.SEAL, EXT. 1 .SELLO, ESCAPE 1	1					
23	60C–W0078–01	WATER PUMP REPAIR KIT ESTUCHE REPARACION BOMBA AGUA	1					
24	6R3–44322–42	.INSERT, CARTRIDGE .CARTUCHO	1					
25	93210–86M38	.O-RING .ANILLO O	1					
26	93210–37160	.O-RING .ANILLO O	1					
27	6E5–44352–01	.IMPELLER .IMPULSOR	1					

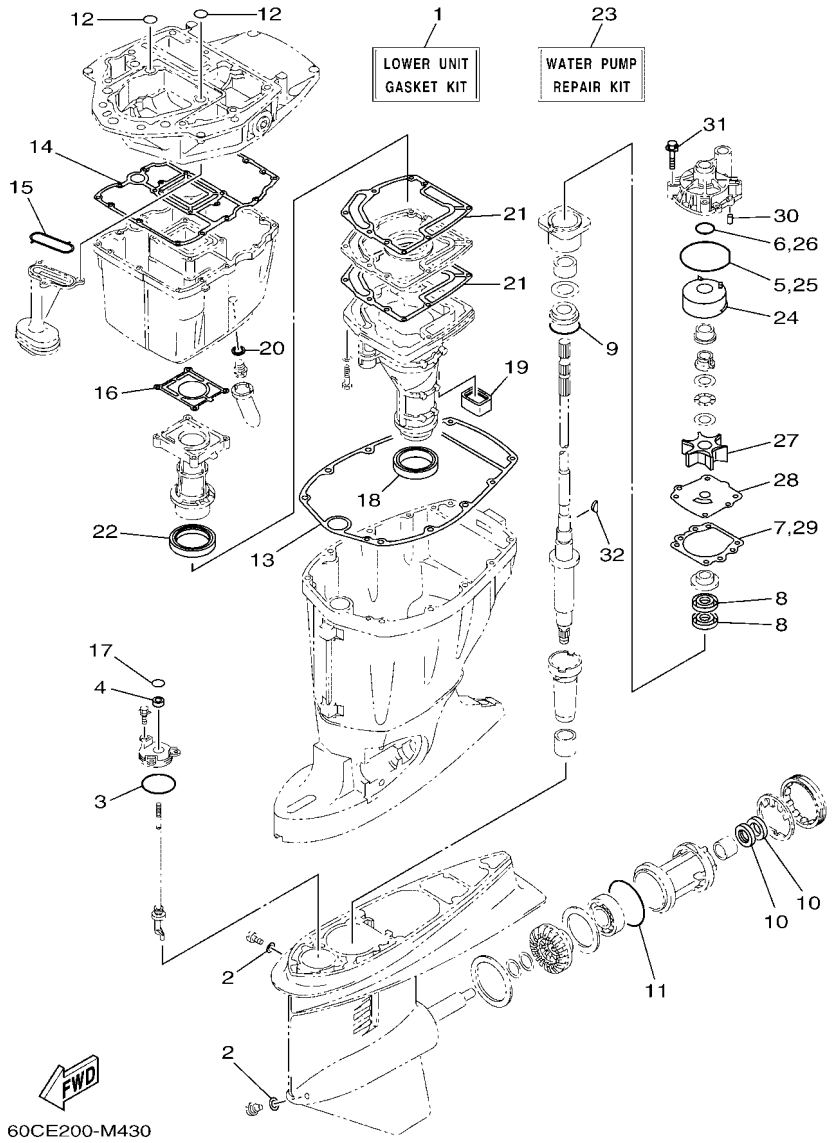

FIG. 35 REPAIR KIT 3 — ESTUCHE REPARATION 3

REF. NO.	PART NO. CODIGO Nº	DESCRIPTION DESCRIPCION	60CN					REMARKS OBSERVACIONES
28	60C–44323–40	.OUTER PLATE, CARTRIDGE .PLACA EXTERIOR DEL CARTUCHO	1					
29	6E5–44315–A0	.GASKET, WATER PUMP .EMPAQUE	1					
30	93606–12019	.PIN, DOWEL .PASADOR DE CLAVIJA	2					
31	90119–08191	.BOLT, WITH WASHER .TORNILLO CON ARANDELA	4					
32	90280–04M05	.KEY, WOODRUFF .CUNA WOODRUFF	1					

NUMERICAL INDEX
INDICE NUMERICO

PART NO. CODIGO Nº	REF. NO.
6D8–11110–20–9S	5 – 2
62Y–11119–00	3 – 8
67F–11133–10	5 – 3
67F–11168–00	5 – 19
67F–11181–03	5 – 14
	33 – 3
6D8–11191–01–9S	5 – 18
67F–11192–01	5 – 24
69J–11301–01	3 – 33
	5 – 8
6E5–11325–00	1 – 1
	3 – 12
67F–11325–01	1 – 2
	1 – 4
	3 – 34
	5 – 9
67F–11328–01	3 – 35
	5 – 10
68V–11351–00	3 – 42
	33 – 11
6D8–11356–01	5 – 22
	33 – 15
676–11372–00	3 – 15
	32 – 3
6D8–11411–01	4 – 1
6D8–11416–00	4 – 4
6D8–11416–10	4 – 4
6D8–11416–20	4 – 4
6D8–11417–00	4 – 5
6D8–11417–10	4 – 5
6D8–11417–20	4 – 5
6D8–11417–30	4 – 5
6D8–11418–00	4 – 6
6D8–11418–10	4 – 6
6D8–11418–20	4 – 6
6D8–11536–01	6 – 22
67F–11537–00	6 – 13
67F–11590–00	6 – 17
67F–11595–00	6 – 20
60C–11603–10	4 – 9
60C–11604–10	4 – 9
6D8–11656–00	4 – 10
6D8–11656–10	4 – 10
6D8–11656–20	4 – 10
6D8–11656–30	4 – 10
6D8–12111–00	6 – 1
6D8–12113–00	6 – 4
6D8–12116–00	6 – 3

PART NO. CODIGO Nº	REF. NO.
26H–12117–00	6 – 5
4G0–12118–00	6 – 6
6D8–12121–10	6 – 2
6D8–12153–00	6 – 9
6D8–12153–10	6 – 9
6D8–12153–20	6 – 9
6D8–12153–30	6 – 9
6D8–12153–40	6 – 9
6D8–12153–50	6 – 9
6D8–12153–60	6 – 9
6D8–12153–70	6 – 9
6D8–12153–80	6 – 9
6D8–12153–90	6 – 9
6D8–12153–A0	6 – 9
6D8–12153–B0	6 – 9
6D8–12153–C0	6 – 9
6D8–12153–D0	6 – 9
6D8–12153–E0	6 – 9
6D8–12153–F0	6 – 9
6D8–12153–G0	6 – 9
6D8–12153–H0	6 – 9
6D8–12153–J0	6 – 9
6D8–12153–K0	6 – 9
6D8–12153–L0	6 – 9
6D8–12153–M0	6 – 9
6D8–12153–N0	6 – 9
6D8–12153–P0	6 – 9
6D8–12153–R0	6 – 9
6D8–12153–S0	6 – 9
6D8–12153–T0	6 – 9
6D8–12153–U0	6 – 9
6D8–12153–V0	6 – 9
6D9–12171–00	6 – 10
6D8–12181–00	6 – 11
67F–12411–01	1 – 5
	5 – 26
67F–12412–00	5 – 27
68V–12413–00–9S	5 – 28
6G5–12416–00	3 – 27
67F–12435–A0	3 – 31
	33 – 6
67F–1243A–00	3 – 39
67F–1246A–A0–9S	3 – 30
60C–12484–00	32 – 5
67F–12535–01	17 – 32
6DR–12572–00	17 – 31
6R3–12581–00	17 – 40
6R3–12582–00	17 – 41

PART NO. CODIGO Nº	REF. NO.
6R3–12583–00	17 – 42
67F–13119–01	24 – 17
63P–13131–00	10 – 18
67F–13149–00	24 – 21
67F–13183–00	9 – 2
67F–13300–10	24 – 12
67F–13314–02	24 – 13
67F–13329–00	24 – 15
67F–13338–00	24 – 23
67F–13339–00	24 – 22
67F–13411–00	24 – 8
67F–13415–00	24 – 11
	35 – 15
68V–13437–63	12 – 21
5GH–13440–71	1 – 3
	3 – 43
67F–13448–00	3 – 46
67F–13473–01	24 – 14
67F–13495–00	24 – 16
67F–13631–03	24 – 20
67F–13641–00–94	7 – 6
67F–13645–00	7 – 11
	33 – 12
67F–13769–00	24 – 18
67F–13914–00	24 – 19
67F–1412A–00	9 – 1
67F–14146–00	8 – 6
67F–14147–00	8 – 7
	34 – 2
67F–14159–00	8 – 25
67F–14178–00	8 – 33
67F–14189–00	9 – 11
67F–14216–00	7 – 2
67F–14239–00	7 – 3
	34 – 14
67F–14243–00	7 – 1
67F–14271–00	7 – 4
67F–14291–00	31 – 6
60C–14294–00	9 – 15
60C–14298–00	9 – 16
67F–14325–00	8 – 45
67F–14349–00	9 – 3
67F–14349–10	9 – 4
67F–14349–20	9 – 5
67F–14349–30	9 – 6
67F–14349–40	9 – 7
67F–14349–50	9 – 8
67F–14349–60	9 – 9

PART NO. CODIGO Nº	REF. NO.
67F–14349–70	9 – 12
67F–14369–00	8 – 44
67F–14371–01	8 – 39
	34 – 15
67F–14378–00	8 – 30
67F–14380–02	8 – 31
67F–14397–00	8 – 17
	34 – 4
67F–14398–00	8 – 35
	34 – 11
67F–14398–10	8 – 37
	34 – 12
67F–14398–20	8 – 38
	34 – 13
67F–14398–30	8 – 40
	34 – 17
67F–14440–00	7 – 17
63V–14523–00	8 – 41
6AH–14546–00	8 – 28
6H4–14548–00	8 – 26
	34 – 8
67F–14555–00	8 – 15
697–14555–00	8 – 5
67F–14556–00	8 – 16
65L–14565–00	8 – 8
67F–14565–00	8 – 36
67F–14567–00	8 – 14
6K7–14573–00	15 – 14
6H2–14578–00	8 – 18
67F–14585–00	9 – 10
60C–14590–02	34 – 9
67F–14592–00	8 – 34
60C–14711–10–9S	23 – 10
60C–14711–30–9S	23 – 10
60C–14901–03	8 – 1
60C–14902–03	8 – 2
60C–14904–03	8 – 3
67F–14923–00	8 – 4
3TJ–14937–40	9 – 14
67F–14943–83	8 – 13
67F–14947–00	8 – 12
67F–14948–04	8 – 11
679–14966–00	8 – 9
67F–14980–01	8 – 19
67F–14980–11	8 – 20
67F–14984–00	8 – 21
	34 – 5
6H4–14985–01	8 – 24

PART NO. CODIGO Nº	REF. NO.
6H4–14985–01	34 – 7
6H3–14992–00	8 – 22
67F–14998–00	8 – 43
67F–15100–04	3 – 2
67F–15142–00	3 – 11
68V–15311–00–CA	24 – 1
68V–15312–00	24 – 7
	35 – 14
63P–15316–01	24 – 2
6D8–15362–00	24 – 27
6G8–15363–00	5 – 30
67F–15373–00	7 – 12
68V–24149–00	10 – 26
67F–24251–02	31 – 13
6Y2–24305–06	11 – 6
	11 – 9
6Y2–24306–45	11 – 1
6D8–24311–00	10 – 14
67F–24312–00	17 – 43
61A–24316–00	3 – 24
6E5–24351–51	11 – 3
6Y2–24360–60	11 – 5
	11 – 8
67F–24367–00	17 – 31
68V–24374–00	10 – 21
67F–24377–00	31 – 10
6R3–24377–00	10 – 2
688–24378–00	3 – 23
	9 – 17
6D8–24410–10	10 – 15
68V–24411–00	10 – 20
68V–24412–00	10 – 16
68V–24413–10	10 – 22
6D8–24414–00	10 – 24
68V–24423–00	10 – 19
68V–24444–00	10 – 25
68V–24454–00	10 – 17
68V–24469–01	10 – 9
68V–24471–10	10 – 23
67F–2451B–00	31 – 14
68V–24521–01	10 – 6
60C–24560–01	10 – 5
61N–24563–10	1 – 7
	10 – 7
60C–24566–00	10 – 11
67F–28100–03	10 – 30
67F–28100–12	10 – 30
67F–2812A–00	14 – 21

PART NO. CODIGO Nº	REF. NO.
67F–41113–51–9S	3 – 14
67F–41113–61–9S	32 – 2
67F–41114–A2	3 – 16
	32 – 7
	33 – 8
60C–41131–01–9S	23 – 7
67F–41133–A1	23 – 8
	35 – 16
67F–41134–A0	23 – 14
	35 – 21
67F–41137–02–CA	23 – 3
67F–41138–00	23 – 16
	35 – 22
60C–41190–10	32 – 1
67F–41213–01	18 – 38
67F–41237–00	18 – 35
682–41237–00	18 – 36
67F–41661–00–94	18 – 33
67F–42154–00–94	18 – 25
68V–42510–11–8D	20 – 8
68V–42510–31–8D	20 – 8
68V–42541–20	32 – 4
60C–42610–42	2 – 1
67F–42613–00–8D	2 – 10
67F–42615–00	2 – 13
67F–4261A–02	2 – 2
61N–42628–01	2 – 12
67F–42628–01	2 – 14
67F–42647–00	2 – 3
67F–42649–00	2 – 8
68V–42652–00	2 – 6
67F–42662–01	2 – 9
60C–42675–11	2 – 17
60C–42676–11	2 – 19
60C–42677–21	2 – 15
60C–42678–31	2 – 16
6AJ–4267A–01	2 – 20
60C–42681–11	2 – 18
67F–42710–03–8D	17 – 1
648–42715–00	18 – 22
61A–42716–01	17 – 45
67F–42717–00	17 – 25
67F–42724–01	23 – 2
68V–42725–11	17 – 19
688–42726–11	17 – 22
6H1–42726–22	17 – 22
6G1–42727–01	23 – 6
67F–42738–00–8D	17 – 17

NUMERICAL INDEX
INDICE NUMERICO

PART NO. CODIGO Nº	REF. NO.
67F–42741–01–8D	17 – 46
6H4–42748–01	17 – 24
67F–42756–01	17 – 20
6EE–42794–40	17 – 52
6EE–42794–50	17 – 53
67F–42815–00–8D	17 – 5
67F–42816–00–8D	17 – 6
68V–42818–01	17 – 9
67F–42828–00–9S	17 – 7
68V–43111–01–8D	19 – 1
68V–43112–01–8D	19 – 7
64E–43126–10	19 – 35
64E–43131–01	19 – 11
64E–43139–11	20 – 1
64D–43144–00	17 – 14
66T–43144–00	19 – 25
6E5–43145–01	27 – 8
6G5–43148–00	19 – 30
6G5–43181–02	19 – 27
6G5–43185–02	19 – 28
64E–43311–10–8D	19 – 21
64E–43311–20–8D	19 – 21
63P–43338–10	21 – 54
61A–43376–00	20 – 6
68V–43800–11	21 – 1
63P–43801–10	21 – 4
63P–43802–20	21 – 37
6EK–43804–11	22 – 3
6EK–43805–01	22 – 2
6EK–4380F–00	22 – 6
68V–4380L–11	21 – 2
64E–4380P–10	21 – 9
64E–43810–11	21 – 3
63P–43811–20	21 – 6
63P–43812–20	21 – 23
63P–43814–20	21 – 13
6CJ–43816–00	21 – 61
63P–43816–10	21 – 20
6BC–43818–00	19 – 19
63P–4381C–20	21 – 41
63P–4381J–10	21 – 62
63P–43820–20	21 – 26
63P–43821–21	21 – 25
6CJ–43829–10	21 – 17
63P–4382A–10	21 – 31
63P–4382C–20	21 – 15
68V–43830–10	21 – 42
69J–43831–00	21 – 66

PART NO. CODIGO Nº	REF. NO.
6H1–43841–11	21 – 18
63P–43843–10	21 – 53
6H1–43844–10	21 – 45
63P–43844–20	21 – 51
63P–43845–20	21 – 34
63P–43847–10	21 – 29
6H1–4384G–11	21 – 44
63P–4384G–20	21 – 55
63P–4384H–10	21 – 32
63P–43851–20	21 – 48
63P–43854–10	21 – 30
68V–43855–10	21 – 52
6H1–43856–10	21 – 46
63P–43857–10	21 – 59
63P–4385H–10	21 – 60
6CJ–43861–10	21 – 68
63P–43861–20	21 – 7
6EK–43862–00	22 – 12
6H1–43862–00	21 – 10
	21 – 12
63P–43862–10	21 – 24
6D8–43863–00	21 – 22
63P–43863–10	21 – 8
6H1–43866–01	21 – 39
62X–4386K–00	22 – 7
62X–43871–00	21 – 27
61A–43876–01	21 – 36
63P–43876–10	21 – 19
61A–43878–00	21 – 65
63P–43879–10	22 – 8
68V–43880–10	22 – 1
68V–43881–10	22 – 10
6EK–43882–00	22 – 11
6EK–43892–00	22 – 4
69J–4389J–00	21 – 33
67F–44117–00–94	18 – 5
68V–44118–00	18 – 18
60C–44120–12	18 – 13
60C–44120–32	18 – 13
67F–44121–00	18 – 10
688–44122–00	18 – 7
67F–44135–00	18 – 39
6L6–44150–02	25 – 17
703–44189–20	29 – 36
703–44189–30	29 – 42
6X3–44191–00	29 – 47
60H–44194–00	20 – 32
61A–44311–01	25 – 23

PART NO. CODIGO Nº	REF. NO.
6E5–44312–00	26 – 4
	26 – 20
6E5–44315–A0	25 – 30
	35 – 7
	35 – 29
6R3–44322–42	25 – 24
	35 – 24
60C–44323–40	25 – 29
	35 – 28
6E5–44352–01	25 – 27
	35 – 27
6BC–44361–10	26 – 2
6BC–44361–30	26 – 2
6E5–44365–01	26 – 3
	26 – 19
6E5–44366–01	26 – 1
6BL–44391–00	17 – 23
67F–44514–01	20 – 25
67F–44526–00	20 – 28
6G5–44526–00	19 – 3
67F–44533–00	20 – 30
68V–44551–00–8D	20 – 13
68V–44553–00–8D	20 – 23
61A–44555–01	20 – 16
61A–44575–01	20 – 15
68V–45111–11–8D	23 – 18
68V–45111–31–8D	23 – 18
67F–45113–00	23 – 26
	35 – 13
68V–45123–00	23 – 11
	35 – 18
67F–45127–00	23 – 17
	35 – 19
67F–45151–00	23 – 23
6C5–45155–01	23 – 25
67F–45181–00–CA	23 – 15
688–45214–02	26 – 10
688–45215–02	26 – 11
6G5–45251–02	1 – 9
	19 – 2
60C–45300–15–8D	25 – 1
60C–45300–35–8D	25 – 1
6E5–45301–07–8D	25 – 2
6E5–45318–00	23 – 21
6E5–45321–00	25 – 13
6E5–45331–00–9S	25 – 33
6E5–45332–00–CA	25 – 55
688–45341–10	25 – 7

PART NO. CODIGO Nº	REF. NO.
6E5–45344–00	25 – 39
6E5–45371–01	1 – 12
	26 – 14
688–45375–00	26 – 9
663–45376–00	26 – 8
6E5–45378–00	25 – 10
688–45383–02	25 – 65
688–45384–02	25 – 66
68V–45501–10	25 – 41
68V–45501–30	25 – 41
61A–45527–00	25 – 22
6E5–45536–00	25 – 9
61A–45538–00	25 – 19
68V–45551–00	25 – 42
68V–45560–00	25 – 44
6E5–45567–01	25 – 5
6E5–45567–10	25 – 5
6E5–45567–20	25 – 5
6E5–45567–30	25 – 5
6E5–45567–40	25 – 5
6E5–45567–50	25 – 5
6E5–45567–60	25 – 5
68V–45571–00	25 – 57
6E5–45576–00	25 – 58
6L6–45577–00	25 – 62
6L6–45577–10	25 – 62
6L6–45577–20	25 – 62
6L6–45577–30	25 – 62
6L6–45577–40	25 – 62
6L6–45577–50	25 – 62
6L6–45577–60	25 – 62
6E5–45587–01	25 – 36
6E5–45587–10	25 – 36
6E5–45587–20	25 – 36
6E5–45587–30	25 – 36
6E5–45587–40	25 – 36
6E5–45587–50	25 – 36
6E5–45587–60	25 – 36
6E5–45611–01	25 – 46
68V–45631–02	25 – 53
6E5–45633–01	25 – 54
6E5–45634–02	25 – 47
688–45930–02	26 – 26
6E5–45945–01	26 – 26
6E5–45947–00	26 – 26
63P–45987–00	26 – 21
688–45997–01	26 – 22
67F–46241–00	6 – 16

PART NO. CODIGO Nº	REF. NO.
703–48128–10	29 – 39
703–48129–00	29 – 41
703–48152–10	29 – 6
703–48153–00	29 – 61
703–48189–00	29 – 19
703–48198–00	29 – 16
703–48205–23	28 – 1
	29 – 1
703–48205–B3	28 – 1
	29 – 1
703–48211–10	29 – 25
703–48212–10	29 – 26
703–48213–10	29 – 27
703–48215–11	29 – 46
703–48219–10	29 – 34
703–48221–10	29 – 28
703–48222–20	29 – 31
703–48223–10	29 – 32
703–48225–10	29 – 33
703–48227–00	29 – 30
703–48232–00	29 – 2
703–48234–00	29 – 20
703–48235–00	29 – 5
703–48236–00	29 – 18
703–48238–00	29 – 24
703–48243–00	29 – 17
703–48244–00	29 – 23
703–48245–00	29 – 13
703–48246–00	29 – 29
701–48248–00	29 – 15
703–48252–00	29 – 14
703–48261–01	29 – 4
703–48264–00	29 – 8
703–48265–10	29 – 11
703–48268–00	29 – 7
703–48271–00	29 – 3
703–48281–00	29 – 35
703–48284–00	29 – 58
701–48287–00	29 – 45
703–48293–10	29 – 44
6FM–48344–00	18 – 3
	18 – 23
703–48345–01	29 – 21
701–48350–10	28 – 2
703–48358–01	29 – 22
68V–48511–01	20 – 33
67F–48538–00	18 – 1
6E5–61350–02	27 – 1

PART NO. CODIGO Nº	REF. NO.
6E5–61351–01	27 – 2
6E5–61355–00	27 – 5
66T–81328–00	12 – 8
445–81328–20	12 – 7
67F–8132G–01	15 – 1
6D8–81332–00	12 – 15
67F–81337–01	12 – 17
63D–81345–20	12 – 5
67F–81673–10	12 – 9
67F–81800–04	16 – 1
69J–81801–11	16 – 5
67F–81807–00	16 – 10
67F–81808–00	16 – 8
67F–81809–00	16 – 19
67F–81810–00	16 – 3
67F–81813–00	16 – 6
68F–81820–00	16 – 7
67F–81821–00	16 – 13
6K7–81826–11	16 – 24
69J–81828–00	16 – 25
67F–81830–00	16 – 17
67F–81832–00	16 – 11
67F–81836–00	16 – 12
6C5–81839–00	16 – 21
67F–8183R–00	16 – 15
60V–8183T–00	16 – 18
69J–81840–11	16 – 4
67F–81841–00	16 – 14
60X–81842–00	16 – 20
67F–81846–00	16 – 26
67F–81850–00	16 – 2
67F–81857–00	16 – 9
6C5–81869–00	16 – 23
67F–81891–00	16 – 16
67F–81916–02	14 – 30
60V–81925–00	16 – 27
67F–81930–00	31 – 3
67F–81941–02	16 – 22
67F–81942–00	14 – 20
67F–81948–01	14 – 18
6G1–8194A–10	14 – 3
6G1–81952–01	14 – 6
67F–81953–00	14 – 16
6E5–8195B–01	14 – 7
6E5–8195C–01	14 – 10
67F–81960–12	13 – 19
67F–81971–00	31 – 5
6EE–81994–40	12 – 24

NUMERICAL INDEX
INDICE NUMERICO

PART NO. CODIGO Nº	REF. NO.
6EE–81994–50	12 – 25
6EE–81995–40	12 – 22
6EE–81995–50	12 – 23
6AG–81996–00	12 – 26
67F–82105–01	14 – 2
67F–82116–01	14 – 15
6G5–82119–00	14 – 14
682–82119–01	14 – 1
6E5–82148–00	19 – 5
	19 – 8
66K–82149–00	19 – 24
68V–82149–30	19 – 24
67F–82151–00	14 – 23
6G1–82151–01	30 – 5
67F–82151–10	14 – 24
67F–8215B–00	14 – 25
6EK–82181–00	22 – 5
68V–82317–01	13 – 2
67F–82341–00	13 – 10
67F–82342–00	13 – 11
67F–82343–00	13 – 14
67F–82344–00	13 – 15
67F–82361–00	13 – 12
	13 – 16
	13 – 18
67F–82362–00	13 – 13
	13 – 17
68V–82504–00	15 – 20
703–82510–14	29 – 48
703–82510–45	29 – 48
703–82531–00	29 – 51
6K1–82532–00	29 – 50
703–82532–00	29 – 50
703–82540–00	29 – 55
682–82556–00	29 – 53
67F–82560–00	31 – 4
63D–82563–11	15 – 21
703–82563–31	29 – 57
688–82575–02	29 – 52
703–82577–00	29 – 49
676–82577–01	29 – 49
68F–82582–00	16 – 28
6E5–82587–00	15 – 22
67F–82588–00	14 – 27
6E5–82588–00	17 – 27
	31 – 17
688–8258A–10	14 – 33
688–8258A–20	29 – 54

PART NO. CODIGO Nº	REF. NO.
60C–82590–31	14 – 22
703–82591–00	29 – 59
703–82592–00	29 – 60
703–83383–11	29 – 56
6Y5–8350T–E0	30 – 1
6Y5–83553–01	30 – 4
6E5–83558–00	26 – 17
6E5–83558–10	25 – 12
67F–83614–00	15 – 23
67F–83626–00	14 – 32
67F–83635–00	15 – 15
6Y5–83653–20	30 – 6
6Y5–83653–30	30 – 6
67H–83672–02	20 – 3
67F–83790–12	31 – 1
67F–83792–01	31 – 2
6Y8–84383–00	30 – 3
67F–85510–01	12 – 4
663–85518–00	18 – 26
67F–85540–03	13 – 1
689–85547–01	10 – 1
67F–85550–01	12 – 1
67F–85560–01	12 – 2
67F–85570–00	13 – 5
67F–85580–00	12 – 3
68V–85753–00	33 – 7
68V–85753–01	15 – 5
67F–85757–00	15 – 4
6D8–85790–00	15 – 3
61A–85885–00	15 – 10
66T–87149–00	14 – 13
K1C–A3275–00	4 – 8
K0A–A3721–00	6 – 7
K0A–A3722–00	6 – 8
5ML–E4854–00	8 – 32
60C–W0001–04	33 – 1
68V–W0001–21	35 – 1
60C–W0078–01	1 – 13
	35 – 23
67F–W0093–02	34 – 1
67F–W009A–27–9S	5 – 1
60C–W009B–12–9S	3 – 1
60C–W1164–20	4 – 7
60C–W1164–30	4 – 7
90101–12065	19 – 38
90105–06M07	3 – 36
	5 – 11
90105–10M00	26 – 15

PART NO. CODIGO Nº	REF. NO.
90109–06M80	17 – 49
90109–06M81	17 – 28
	31 – 18
90109–06M82	17 – 8
	17 – 38
90109–06M86	15 – 24
	17 – 15
	17 – 21
	17 – 30
	17 – 38
	18 – 2
90109–06M96	17 – 18
90109–12007	20 – 27
90109–14007	20 – 20
90116–10062	20 – 34
90119–06280	5 – 25
90119–06283	7 – 18
90119–06286	25 – 16
90119–06289	13 – 4
90119–06312	10 – 29
90119–06M92	12 – 20
90119–06MA2	3 – 32
90119–06MA4	3 – 17
90119–07234	5 – 7
90119–07235	5 – 5
90119–08091	20 – 26
90119–08187	17 – 2
90119–08189	23 – 1
90119–08191	25 – 32
	35 – 31
90119–08M59	7 – 20
90119–08M66	3 – 5
90119–08M91	5 – 17
90119–10050	6 – 14
90119–10054	19 – 18
90119–10058	20 – 24
90119–10071	26 – 7
90119–10075	23 – 19
90119–10M72	6 – 21
90119–10M88	3 – 4
90152–05M07	26 – 12
90155–10005	5 – 16
90159–05059	20 – 2
90159–06M28	17 – 48
90159–06M29	14 – 31
90167–06002	17 – 33
90170–06M30	14 – 4
	14 – 8

PART NO. CODIGO Nº	REF. NO.
90170–06M30	14 – 11
90170–16M01	25 – 43
90170–40008	6 – 23
90171–18M04	26 – 24
90176–14003	20 – 21
90179–06M24	2 – 11
90179–24002	12 – 14
90185–05002	26 – 13
90185–09M01	27 – 6
90185–10027	20 – 35
90185–12M12	20 – 31
90185–22M11	19 – 15
90201–05M03	15 – 18
90201–06068	17 – 12
	18 – 28
90201–06M31	18 – 43
90201–09M02	18 – 16
90201–10060	19 – 17
90201–10M02	18 – 42
90201–10M20	27 – 7
90201–12426	19 – 40
90201–12M09	20 – 29
90201–13M01	19 – 39
90201–15M58	20 – 19
90201–16M55	20 – 18
90201–22M01	25 – 20
90201–24014	12 – 13
90201–26M59	19 – 14
90201–30M92	25 – 63
90201–38M60	20 – 9
90202–07M07	18 – 8
90202–32M19	20 – 17
90202–40M47	20 – 12
90204–06M00	14 – 5
	14 – 9
	14 – 12
90206–10M04	18 – 44
90206–12M00	18 – 29
90206–15M18	17 – 11
90206–22M19	25 – 21
90249–06M19	19 – 31
90250–08M07	25 – 52
90280–04008	6 – 24
90280–04M05	25 – 28
	35 – 32
90280–05015	12 – 12
90282–04010	25 – 64
90338–11007	17 – 26

PART NO. CODIGO Nº	REF. NO.
90340–08002	25 – 6
90340–14M06	3 – 6
	24 – 3
90344–51019	5 – 4
90386–06M12	18 – 11
90386–10M16	19 – 29
90386–12069	18 – 31
90386–15M73	17 – 10
90386–22M98	19 – 20
	19 – 36
90386–25M31	19 – 13
90386–38M32	20 – 11
90386–90M90	18 – 15
90387–05M00	15 – 16
90387–06119	13 – 3
90387–06263	24 – 10
90387–06M43	17 – 51
90387–06M71	12 – 18
90387–06M82	18 – 40
90387–08M37	17 – 4
90387–10M05	19 – 32
90387–10M61	27 – 3
90401–20007	3 – 44
90430–06014	7 – 8
90430–06M03	3 – 37
	5 – 12
90430–08003	1 – 11
	25 – 8
	35 – 2
90430–14115	3 – 7
	33 – 5
90430–14M09	1 – 10
	24 – 4
	35 – 20
90445–076K2	26 – 16
90445–07ME8	25 – 11
90445–07ME9	25 – 11
90445–10016	3 – 25
90445–10024	3 – 18
90445–10M16	9 – 18
90445–10MG6	9 – 19
90445–10MG7	9 – 20
90445–11M49	31 – 12
90445–13M01	11 – 2
90445–13M27	10 – 4
90445–13M35	11 – 4
90445–15M03	6 – 19
90445–16M07	9 – 21

PART NO. CODIGO Nº	REF. NO.
90462–06018	17 – 34
90462–10060	3 – 20
90464–09M47	15 – 12
	15 – 25
90464–10010	3 – 22
90464–10M57	9 – 22
90465–06M86	13 – 8
	15 – 7
90465–08028	31 – 8
90465–08M23	17 – 29
90465–08M63	19 – 22
90465–08M83	9 – 23
90465–11M10	3 – 19
	3 – 26
	3 – 45
	10 – 3
	10 – 10
	10 – 27
	15 – 9
	15 – 13
	17 – 44
	19 – 16
	20 – 5
	26 – 18
	31 – 11
	31 – 15
	32 – 6
90465–11M59	3 – 40
	7 – 13
	9 – 13
90465–12M03	7 – 15
90465–13M11	14 – 29
90465–13M18	17 – 39
90465–13M36	31 – 9
90465–13M60	31 – 7
90467–10M04	31 – 16
90467–20M15	3 – 41
	7 – 14
90468–18008	18 – 4
	18 – 9
	18 – 12
	18 – 24
90480–10M23	15 – 17
90480–12072	5 – 21
90480–12314	3 – 10
90480–13M24	17 – 50
90480–15M31	12 – 19
90480–20M05	3 – 29

NUMERICAL INDEX
INDICE NUMERICO

PART NO. CODIGO Nº	REF. NO.
90480–22M15	17 – 3
90501–10326	8 – 42
90501–12082	18 – 21
90501–16M11	3 – 28
90501–16M37	25 – 48
90506–14M24	19 – 34
90506–16M34	17 – 16
90506–16M39	6 – 18
90560–12M01	27 – 4
91312–04020	21 – 57
91312–05035	21 – 63
91380–06025	21 – 67
91490–20015	18 – 17
91490–40030	26 – 25
91609–16010	21 – 11
91690–30018	18 – 27
91690–30020	19 – 33
91690–50014	7 – 10
91809–08006	5 – 6
92903–08100	16 – 33
92903–08600	16 – 31
92990–06100	2 – 4
92990–08600	29 – 38
92990–12600	18 – 30
92990–18200	26 – 23
92995–06100	17 – 36
92995–06200	17 – 37
92995–14600	20 – 22
93101–28M16	25 – 34
	35 – 8
93101–30M17	25 – 60
	35 – 10
93101–48001	4 – 3
	33 – 10
93102–38008	6 – 15
	33 – 4
93102–48008	4 – 2
	33 – 9
93106–09014	25 – 15
	35 – 4
93106–19001	21 – 5
93210–04228	8 – 29
	34 – 10
93210–04230	8 – 23
	34 – 6
93210–064A5	21 – 40
	21 – 50
93210–07N51	21 – 47
93210–08287	11 – 7
	11 – 10
93210–09165	18 – 14
	21 – 16
	35 – 17
93210–11N52	21 – 21
93210–12327	21 – 35
93210–12N52	21 – 38
93210–16275	27 – 9
93210–19MJ1	24 – 26
	35 – 12
93210–24M79	5 – 31
	33 – 2
93210–29375	21 – 28
93210–30682	10 – 28
	33 – 14
93210–32738	1 – 8
	10 – 8
93210–37160	25 – 26
	35 – 6
	35 – 26
93210–37MH7	20 – 10
93210–40M10	7 – 5
	34 – 16
93210–41MJ2	7 – 19
	33 – 13
93210–55M14	25 – 38
	35 – 9
93210–58144	25 – 14
	35 – 3
93210–68N50	21 – 14
93210–86M38	25 – 25
	35 – 5
	35 – 25
93210–86M39	25 – 61
	35 – 11
93306–208U0	25 – 56
93315–425U7	25 – 45
93315–430U8	25 – 59
93315–628U9	25 – 3
93317–330U2	25 – 35
93332–000U7	25 – 4
93341–930V2	25 – 37
93410–22M11	19 – 37
93410–37M04	20 – 14
93420–36M01	23 – 22
93430–06024	29 – 12
93501–04M02	18 – 20
93501–08001	21 – 49
	21 – 58
93503–16003	21 – 43
	25 – 51
93505–32038	21 – 64
93507–32009	25 – 49
93511–32017	25 – 50
93604–10011	21 – 56
93604–12M07	24 – 25
93605–10108	6 – 12
93606–12019	3 – 3
	24 – 6
	25 – 31
	35 – 30
93606–19M23	23 – 13
93608–12M05	26 – 5
93608–16M16	23 – 5
	23 – 20
93700–06002	19 – 10
	19 – 23
94702–00391	1 – 6
	5 – 32
95333–08600	16 – 32
95380–05600	18 – 37
	29 – 9
95380–06600	2 – 5
	17 – 47
	29 – 43
95380–08600	10 – 12
95380–12600	19 – 41
95780–10300	20 – 7
95812–06025	24 – 9
95D95–06010	23 – 27
97013–08016	16 – 30
97380–05025	29 – 10
97380–08030	29 – 37
97513–08545	16 – 29
97602–04316	22 – 9
97607–04110	12 – 6
97607–04208	5 – 20
97980–04114	8 – 10
	34 – 3
97980–06216	23 – 24
97985–05210	15 – 11
97985–05325	15 – 19
97985–06210	12 – 16
97985–06212	19 – 9
97985–06216	20 – 4
97D95–06008	17 – 35
97D95–06010	7 – 7
	19 – 26
97D95–06016	17 – 13
97D95–06035	18 – 41
97E75–06525	18 – 19
	24 – 5
97E75–06530	23 – 12
97E75–06570	23 – 9
97E75–08535	7 – 9
97E75–08540	3 – 38
	5 – 13
	23 – 4
97E95–06510	19 – 6
97E95–06512	2 – 7
	3 – 21
	7 – 16
	9 – 24
	13 – 9
	14 – 28
	15 – 8
	18 – 32
97E95–06516	10 – 13
	14 – 17
	14 – 19
	15 – 2
	15 – 6
97E95–06520	3 – 9
97E95–06525	5 – 29
	18 – 34
97E95–06530	5 – 23
	19 – 4
97E95–06540	18 – 6
97E95–06545	24 – 24
97E95–06616	13 – 21
	14 – 26
97E95–06620	13 – 7
97E95–06625	13 – 20
97E95–06630	12 – 11
	13 – 6
97E95–08520	19 – 12
97E95–08525	25 – 40
97E95–10545	26 – 6
98580–04006	29 – 40
98580–04008	8 – 27
98780–04016	3 – 13
99001–08600	25 – 18
99530–08012	12 – 10
99530–14016	5 – 15
9E450–04533	30 – 2