YAMAHA

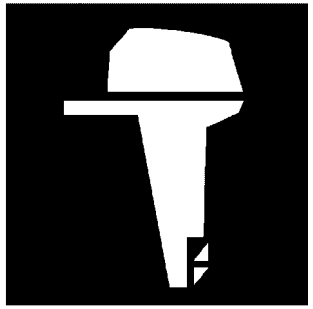

PARTS CATALOGUE
CATALOGO DE REPUESTOS

F150FET'21 (6BME)
FL150FET'21 (6BNE)

YAMAHA GENUINE Parts & Accessories

1V6BM-200SA

( )

F150FET/FL150FET
PARTS CATALOGUE
©2023 by Yamaha Motor Co., Ltd.
1st edition, April 2023
All rights reserved.
Any reprinting or unauthorized use
without the written permission of
Yamaha Motor Co., Ltd.
is expressly prohibited.
Printed in Japan.

F150FET/FL150FET
CATALOGO DE REPUESTOS
©2023 por Yamaha Motor Co., Ltd.
1ª edición, abril 2023
Todos los derechos reservados.
Toda reproducción o uso no autorizado
sin el consentimiento escrito de
Yamaha Motor Co., Ltd.
quedan expresamente prohibidos
Impreso en Japón.

FOREWORD

This Parts Catalogue is related to the parts for the model(s) on the cover page. When you are ordering replacement parts, please refer to this Parts Catalogue and quote both part numbers and part names correctly.

1. Modifications or additions which have been made after the issue of the Parts Catalogue will be announced in the Parts News.
   It is advisable that you make the necessary corrections to the Parts Catalogue according to the Parts News.

2. Abbreviations
   The following abbreviations are used in this Parts Catalogue.
   "UR" Use specified parts number.
   "UN" Use as many as needed.
   "AP" Alternate Parts
   "LM" Locally Made (Parts need to be ordered locally)
   "F#" Frame No. (Applicable machine No.)
   "O/S" Over Size

3. The number of components for assembly
   - Parts, which are to be supplied in an assembly, are listed with a dot (.) in front of the part name as shown below.
   - The numeral appearing to the right of each component part indicates the quantity of parts for each assembly unit.

PART NO.	DESCRIPTION	Q'TY	REMARKS
2F5–83310–60	FRONT FLASHER LIGHT ASSY	2	
115–83311–60	.BULB (6V–18W)	1	

4. Applicable colours of graphics are represented in the "REMARKS" as shown below.

PART NO.	DESCRIPTION	Q'TY	REMARKS
2N4–24110–00–X5	FUEL TANK COMP.	2	MXR
3J1–24240–10	.GRAPHIC, FUEL TANK	1	FOR MXR

5. Note that the illustrations for reference in finding parts numbers are not to be used for assembling. When assembling, please use the applicable service manual.

6. The asterisk (*) before a reference number indicates modified items after the first edition.

7. Applicable Serial No.
   Engine Serial No.

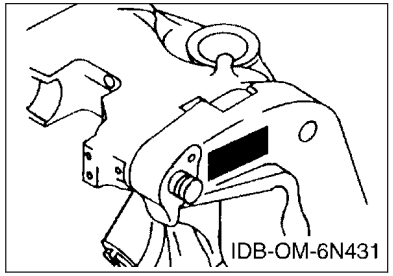

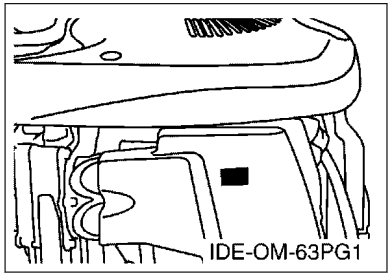

8. Applicable Engine Starting Serial No.

Model	Serial No.	Model	Serial No.
F150F	6BM-1012138	FL150F	6BN-1002466

9. Applicable Colour Code

Abbreviation	Colour Name	Colour Code
DBN1	DARK BLUISH GRAY 1	008D

10. Quantity Column Information

Column No.	Name Of Q'ty Column	Applicable Model
1	6BME	F150FET
2	6BNE	FL150FET

PROLOGO

Este catálogo de repuestos corresponde a las piezas para el o los modelos que figuran en la página de portada. Al formular el pedido de repuestos, se ruega citar este catálogo y especificar correctamente el número y el nombre de las piezas.

1. Las modificaciones y agregados que se hayan realizado después de la edición de este Catálogo de Repuestos, serán anunciados en las Informaciones de Recambios.
   Es recomendable que se hagan las correcciones necesarias en el Catálogo de Repuestos de acuerdo con las Informaciones de Recambios.

2. Abreviaciones
   En este. Catálogo de Repuestos se emplean las siguientes abreviaciones.
   "UR" Usar el número de partes especificado
   "UN" Usar la cantidad necesaria
   "AP" Piezas sustitutivas
   "LM" Fabricación local (Hay que pedir los repuestos en las cercanías)
   "F#" Nº de bastidor (Nº aplicable a la máquina)
   "O/S" Sobredimensionado

3. La cantidad de componentes para el montaje
   - Los componentes, suministrados como conjunto, se describen con un punto (.) que precede al nombre del parte como se indica a continuación.
   - La numeración que aparece a la derecha de cada descripción indica la cantidad de partes por cada unidad de conjunto.

CODIGO Nº	DESCRIPCION	CANT.	OBSERVACIONES
2F5–83310–60	ENSAMBLAJE DE LA LUZ	2	
115–83311–60	.BOMBILLA (6V–18W)	1	

4. Los colores de los componentes se indican como sigue en la columna de "OBSERVACIONES".

CODIGO Nº	DESCRIPCION	CANT.	OBSERVACIONES
2N4–24110–00–X5	COMP. DEL TANQUE	2	MXR
3J1–24240–10	.GRAFICO, DEL TANQUE	1	PARA MXR

5. Debe tenerse en cuenta que las ilustraciones sirven como guia para la búsqueda de los números de partes y no deben usarse para el montaje. Durante el montaje, se recomienda usar el manual de taller correspondiente.

6. EL asterisco (*) antes del número de referencia indica los elementos modificados después de la primera edición.

7. Números de serie
   Nº de Serie del motor

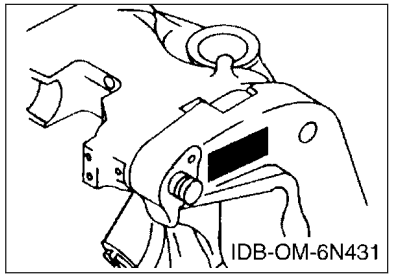

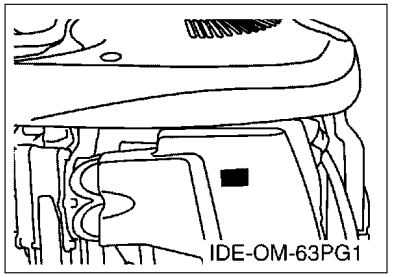

8. Números de serie del motor

Modelo	Nº de serie	Modelo	Nº de serie
F150F	6BM-1012138	FL150F	6BN-1002466

9. Códigos de color aplicables

Abreviatura	Nombre de color	Código de color
DBN1	DARK BLUISH GRAY 1	008D

10. Informacion para la columna de cantidades

Columna Nº	Nombre de la columna de cantidades	Modelo aplicable
1	6BME	F150FET
2	6BNE	FL150FET

CONTENTS

SCHEDULED SERVICE PARTS....1
TOP COWLING....2
CYLINDER & CRANKCASE 1....3
CRANKSHAFT & PISTON....5
CYLINDER & CRANKCASE 2....6
CYLINDER & CRANKCASE 3....8
VALVE....10
INTAKE 1....13
INTAKE 2....14
INTAKE 3....15
FUEL INJECTION PUMP 1....17
FUEL INJECTION PUMP 2....19
FUEL 1....20
FUEL 2....22
GENERATOR....23
ELECTRICAL 1....24
ELECTRICAL 2....25
ELECTRICAL 3....27
STARTING MOTOR....29
BOTTOM COWLING 1....31
BOTTOM COWLING 2....33
CONTROL....34
BRACKET 1....36
BRACKET 2....38
POWER TRIM & TILT ASSY 1....40
POWER TRIM & TILT ASSY 2....43
UPPER CASING....44
OIL PAN....46
LOWER CASING & DRIVE 1....47
LOWER CASING & DRIVE 2....51
LOWER CASING & DRIVE 3....52
LOWER CASING & DRIVE 4....56
STEERING GUIDE....57
REMOTE CONTROL BOX....58
REMOTE CONTROL ASSY 1....59
REMOTE CONTROL ASSY 2....62
REMOTE CONTROL ASSY 3....65
METER 1....68
METER 2....69
SWITCH & PANEL 1....70
SWITCH & PANEL 2....71
OPTIONAL PARTS 1....72
OPTIONAL PARTS 2....73
OPTIONAL PARTS 3....74
OPTIONAL PARTS 4....75
OPTIONAL PARTS 5....76
OPTIONAL PARTS 6....77
OPTIONAL PARTS 7....78
OPTIONAL PARTS 8....79
REPAIR KIT 1....80
REPAIR KIT 2....81

INDEX

NUMERICAL INDEX....83

CONTENIDO

PARTES DE REPUESTO TEMPORALES..... 1
SOPORTE SUPERIOR..... 2
CILINDRO & CARTER 1..... 3
CIGUENAL & PISTON.....5
CILINDRO & CARTER 2..... 6
CILINDRO & CARTER 3..... 8
VALVULA.....10
ADMISION 1.....13
ADMISION 2.....14
ADMISION 3.....15
BOMBA DE INYECTOR 1..... 17
BOMBA DE INYECTOR 2..... 19
COMBUSTIBLE 1.....20
COMBUSTIBLE 2.....22
GENERADOR.....23
EQUIPO ELECTRICO 1..... 24
EQUIPO ELECTRICO 2..... 25
EQUIPO ELECTRICO 3..... 27
MOTOR DE ARRANQUE.....29
CUBIERTA INFERIOR 1..... 31
CUBIERTA INFERIOR 2..... 33
CONTROL..... 34
SOPORTE 1..... 36
SOPORTE 2..... 38
COMPONER Y PODER VARILLA 1.....40
COMPONER Y PODER VARILLA 2.....43
FUNDA SUPERIOR.....44
OIL PAN.....46
IMPULSOR E INFERIOR 1..... 47
IMPULSOR E INFERIOR 2..... 51
IMPULSOR E INFERIOR 3..... 52
IMPULSOR E INFERIOR 4..... 56
DIRECCIONGUIAR..... 57
CONTROL REMOTO COMPLETO..... 58
CONTROL REMOTO COMPL 1.....59
CONTROL REMOTO COMPL 2.....62
CONTROL REMOTO COMPL 3.....65
MEDIDOR 1.....68
MEDIDOR 2.....69
PANEL DE INTERRUPTOR 1.....70
PANEL DE INTERRUPTOR 2.....71
PARTES OPCIONALES 1.....72
PARTES OPCIONALES 2.....73
PARTES OPCIONALES 3.....74
PARTES OPCIONALES 4.....75
PARTES OPCIONLES 5..... 76
PARTES OPCIONALES 6.....77
PARTES OPCIONALES 7.....78
PARTES OPCIONALES 8.....79
ESTUCHE REPARATION 1..... 80
ESTUCHE REPARATION 2..... 81

INDICE

INDICE NUMERICO.....83

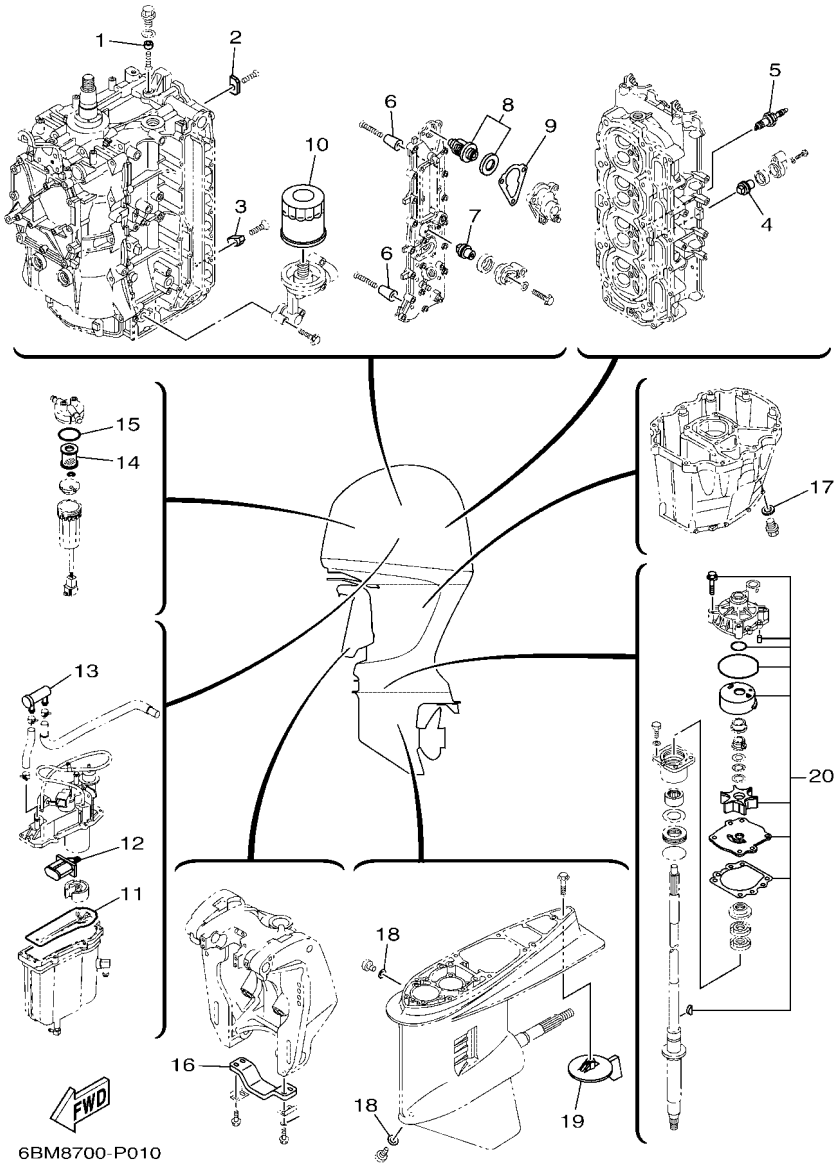

FIG. 1 SCHEDULED SERVICE PARTS — PARTES DE REPUESTO TEMPORALES

REF. NO.	PART NO. CODIGO Nº	DESCRIPTION DESCRIPCION	6BME	6BNE				REMARKS OBSERVACIONES
1	63P–11325–21	ANODE ANODO	1	1				
2	63P–11325–11	ANODE ANODO	4	4				
3	63P–11325–01	ANODE ANODO	1	1				
4	67F–11325–01	ANODE ANODO	2	2				
5	94702–00391	PLUG, SPARK (NGK LFR5A-11) BUJIA (NGK LFR5A-11)	4	4				
6	68T–11325–00	ANODE ANODO	8	8				
7	67F–11325–01	ANODE ANODO	1	1				
8	67F–12411–01	THERMOSTAT TERMOSTAT	1	1				
9	63P–12414–00	GASKET, COVER EMPAQUE	1	1				
10	69J–13440–04	ELEMENT ASSY, OIL CLEANER ELEMENTO FILTRO DE ACEITE	1	1				
11	63P–14984–00	GASKET, FLOAT CHAMBER EMPAQUE CAMARA DE BOIA	1	1				
12	63P–13915–00	FILTER FILTRO	1	1				
13	69J–24501–10	FILTER, FUEL FIELTRO	1	1				
14	6P3–24563–01	ELEMENT, FILTER ELEMENTO DEL FILTRO	1	1				
15	6P3–24564–00	GASKET EMPAQUE	1	1				
16	6G5–45251–02	ANODE CATODE	1	1				
17	90430–14M09	GASKET JUNTA	1	1				
18	90430–08003	GASKET JUNTA	2	2				
19	6J9–45371–01	TAB-TRIM QUILLA ESTABILIZADOR	1					
	6K1–45371–02	TAB-TRIM QUILLA ESTABILIZADOR		1				
20	6S1–W0078–01	WATER PUMP REPAIR KIT ESTUCHE REPARACION BOMBA AGUA	1	1				

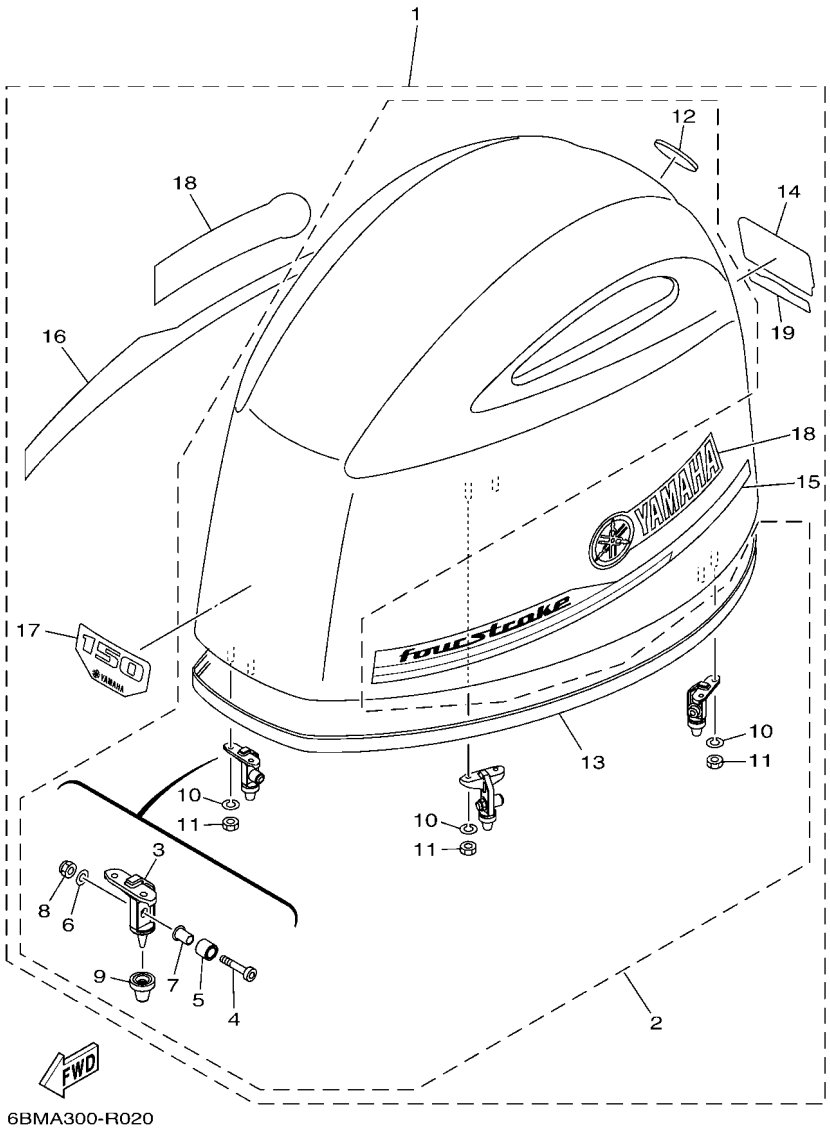

FIG. 2 TOP COWLING — SOPORTE SUPERIOR

REF. NO.	PART NO. CODIGO Nº	DESCRIPTION DESCRIPCION	6BME	6BNE				REMARKS OBSERVACIONES
1	6BM–42610–01	TOP COWLING ASSY SOPORTE SUPERIOR COMPL.	1	1				
2	63P–4261A–11	.TOP COWLING W/O GRAPHICS .SOPORTE SUPERIOR SIN GRAFICOS	1	1				
3	6CB–42647–A0	..HOLDER, CLAMP BAND ..MORDAZA DE ABRAZADERA	3	3				
4	90111–08078	..BOLT,HEX. SOCKET BUTTON ..TORNILLO	3	3				
5	90387–10094	..COLLAR ..ESPACIADOR	3	3				
6	92990–08600	..WASHER, PLATE ..ARANDELA PLANA	3	3				
7	90387–08M45	..COLLAR ..ESPACIADOR	3	3				
8	95780–08300	..NUT, FLANGE ..TUERCA	3	3				
9	6AW–42663–01	..DAMPER 2 ..AMORTIGUADOR 2	3	3				
10	92990–06100	..WASHER, SPRING ..ARANDELA PLANA	6	6				
11	95380–06600	..NUT, HEXAGON ..TUERCA	6	6				
12	6DA–42697–00	..TUNING FORK MARK ..MARCA, YAMAHA	1	1				
13	6CB–42628–00	..SEAL ..SELLO DE GOMA	1	1				
14	6BM–42678–01	.GRAPHIC, REAR .CALCAMONIA TRASERA	1	1				
15	6BM–42675–01	.GRAPHIC, SIDE 1 .CALCAMONIA LATERAL 1	1	1				
16	6BM–42676–01	.GRAPHIC, SIDE 2 .CALCAMONIA LATERAL 2	1	1				
17	6BM–42677–01	.GRAPHIC, FRONT .CALCAMONIA FRONTAL	1	1				
18	6S1–42681–01	.MARK, COWLING .MARCA DE CUBIERTA	2	2				
19	6S1–4267A–01	.GRAPHIC, REAR 2 .CALCAMONIA TRASERA 2	1	1				

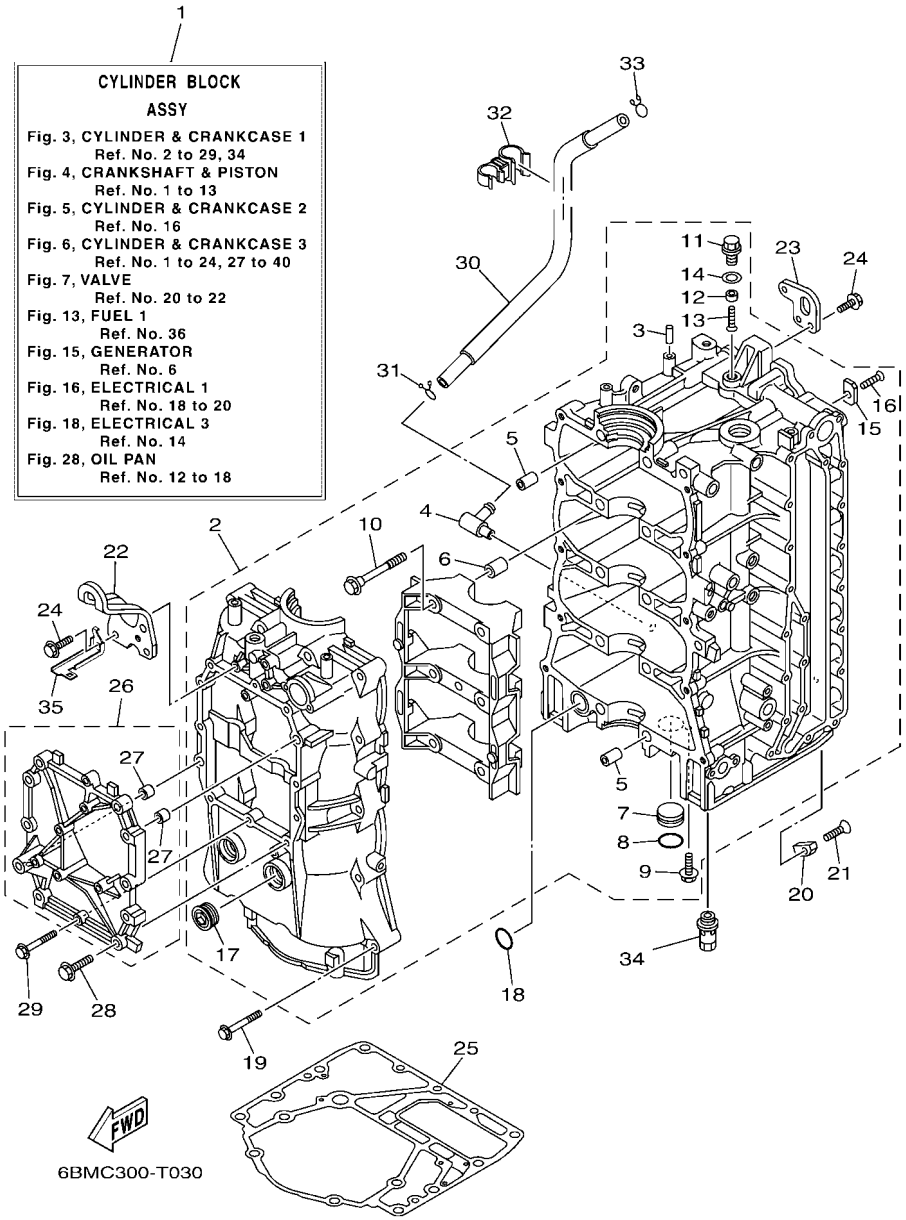

FIG. 3 CYLINDER & CRANKCASE 1 — CILINDRO & CARTER 1

REF. NO.	PART NO. CODIGO Nº	DESCRIPTION DESCRIPCION	6BME	6BNE				REMARKS OBSERVACIONES
1	6BM–W009B–05–9S	CYLINDER BLOCK ASSY CILINDRO BLOQUE COMPLETO	1	1				
2	63P–W1510–04–9S	CRANKCASE ASSY CARTER COMPLETO	1	1				
3	93606–12019	.PIN, DOWEL .PASADOR DE CLAVIJA	1	1				
4	63P–11372–00	.NIPPLE, HOSE .NIPLE DE MANGUERA	1	1				
5	91814–18002	.PIN, DOWEL .PASADOR DE CLAVIJA	4	4				
6	91814–18002	.PIN, DOWEL .PASADOR DE CLAVIJA	6	6				
7	90338–25004	.PLUG .TAPON	1	1				
8	93210–25647	.O-RING .ANILLO O	1	1				
9	90119–06276	.BOLT, WITH WASHER .TORNILLO CON ARANDELA	1	1				
10	90105–10071	.BOLT, FLANGE .TORNILLO	10	10				
11	63P–11197–00	.PLUG, BLIND .TAPON, CIEGO	1	1				
12	63P–11325–21	.ANODE .ANODO	1	1				
13	98780–05016	.SCREW, FLAT HEAD .TORNILLO, CABEZA PLANA	1	1				
14	90430–14115	.GASKET .JUNTA	1	1				
15	63P–11325–11	.ANODE .ANODO	4	4				
16	90151–06M02	.SCREW, COUNTERSUNK .TORNILLO EMBUTIDO	4	4				
17	90340–27129	.PLUG, STRAIGHT SCREW .TORNILLO, DE DRENAJE	2	2				
18	93210–25552	O-RING ANILLO O	1	1				
19	90119–08M66	BOLT, WITH WASHER TORNILLO CON ARANDELA	10	10				
20	63P–11325–01	ANODE ANODO	1	1				
21	90151–06M02	SCREW, COUNTERSUNK TORNILLO EMBUTIDO	1	1				
22	63P–11119–00	HANGER, ENGINE SOPORTE DEL MOTOR	1	1				
23	63P–11119–10	HANGER, ENGINE SOPORTE DEL MOTOR	1	1				
24	90119–06MA2	BOLT, WITH WASHER TORNILLO CON ARANDELA	5	5				
25	63P–11351–03	GASKET, CYLINDER JUNTA, DE CILINDRO	1	1				
26	6BM–11511–00–94	COVER, CRANK CUBIERTA MANIVELA	1	1				
27	91811–11001	.PIN, DOWEL .PASADOR DE CLAVIJA	2	2				

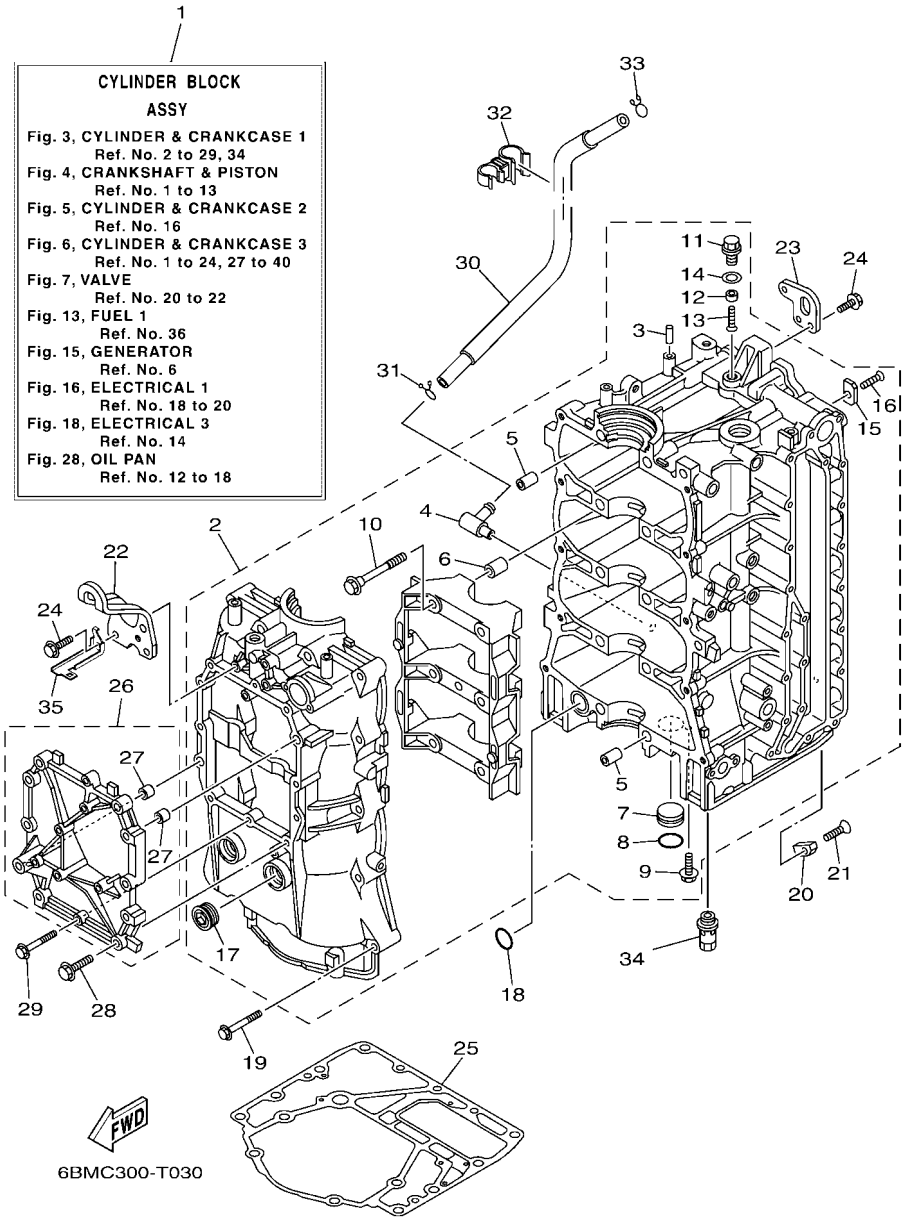

FIG. 3 CYLINDER & CRANKCASE 1 — CILINDRO & CARTER 1

REF. NO.	PART NO. CODIGO Nº	DESCRIPTION DESCRIPCION	6BME	6BNE				REMARKS OBSERVACIONES
28	90119–08022	BOLT, WITH WASHER TORNILLO CON ARANDELA	10	10				
29	90105–06037	BOLT, FLANGE TORNILLO	2	2				
30	63P–11377–10	HOSE MANGUERA	1	1				
31	90467–15M14	CLIP PRESILLA	1	1				
32	90464–15007	CLAMP BRIDA	1	1				
33	90467–15M14	CLIP PRESILLA	1	1				
34	63P–13490–00	RELIEF VALVE ASSY VALVELA DE DESCOMPRESION	1	1				
35	63P–82588–00	PLATE PLACA	1	1				

FIG. 4 CRANKSHAFT & PISTON — CIGUENAL & PISTON

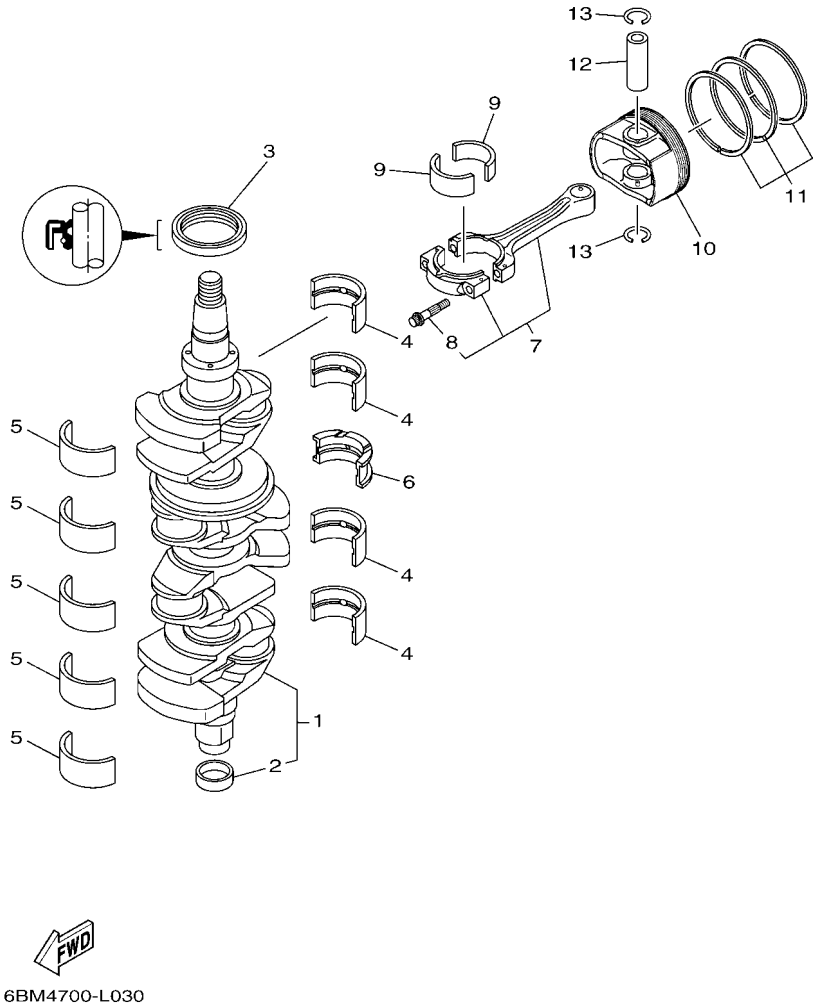

REF. NO.	PART NO. CODIGO Nº	DESCRIPTION DESCRIPCION	6BME	6BNE				REMARKS OBSERVACIONES
1	6BM–11410–02	CRANKSHAFT CIGUENAL	1	1				
2	6CB–11478–00	.COLLAR .COLLAR	1	1				
3	93102–60004	OIL SEAL SELLO ACEITE	1	1				
4	63P–11416–31	PLANE BEARING, CRANKSHAFT 1 COJINETE PLANO 1	4	4				UR GREEN UR GREEN
	63P–11416–41	PLANE BEARING, CRANKSHAFT 1 COJINETE PLANO 1	4	4				UR RED UR RED
	63P–11416–51	PLANE BEARING, CRANKSHAFT 1 COJINETE PLANO 1	4	4				UR YELLOW UR YELLOW
5	63P–11417–41	PLANE BEARING, CRANKSHAFT 2 COJINETE PLANO 2	5	5				UR BROWN UR BROWN
	63P–11417–51	PLANE BEARING, CRANKSHAFT 2 COJINETE PLANO 2	5	5				UR GREEN UR GREEN
	63P–11417–61	PLANE BEARING, CRANKSHAFT 2 COJINETE PLANO 2	5	5				UR RED UR RED
	63P–11417–71	PLANE BEARING, CRANKSHAFT 2 COJINETE PLANO 2	5	5				UR YELLOW UR YELLOW
	63P–11417–81	PLANE BEARING, CRANKSHAFT 2 COJINETE PLANO 2	5	5				UR BLUE UR BLUE
6	63P–11426–31	BEARING, THRUST 1 COJINETE DE EMPUJE 1	1	1				UR GREEN UR GREEN
	63P–11426–41	BEARING, THRUST 1 COJINETE DE EMPUJE 1	1	1				UR RED UR RED
	63P–11426–51	BEARING, THRUST 1 COJINETE DE EMPUJE 1	1	1				UR YELLOW UR YELLOW
7	63P–W1165–10	CONNECTING ROD ASSY BIELA COMPLETA	4	4				
8	63P–11654–10	.BOLT, CONNECTING ROD .TORNILLO DE BIELA	2	2				
9	63P–11656–30	PLANE BEARING, CONNECTING ROD COJINETE PLANO	8	8				UR GREEN UR GREEN
	63P–11656–40	PLANE BEARING, CONNECTING ROD COJINETE PLANO	8	8				UR BLUE UR BLUE
	63P–11656–50	PLANE BEARING, CONNECTING ROD COJINETE PLANO	8	8				UR RED UR RED
10	63P–11631–10–93	PISTON (STD) PISTON (NORMA)	4	4				
	63P–11635–10	PISTON (0.25MM O/S) PISTON (0.25MM O/S)	4	4				AP AP
11	63P–11603–01	PISTON RING SET (STD) JUEGO DE ANILLOS (NORMA)	4	4				
	63P–11604–00	PISTON RING SET (0.25MM O/S) JUEGO DE ANILLOS (0.25MM O/S)	4	4				AP AP
12	63P–11633–10	PIN, PISTON PASADOR, PISTON	4	4				
13	63P–11634–00	CLIP, PISTON PIN PRESILLA, BULON DE PISTON	8	8				

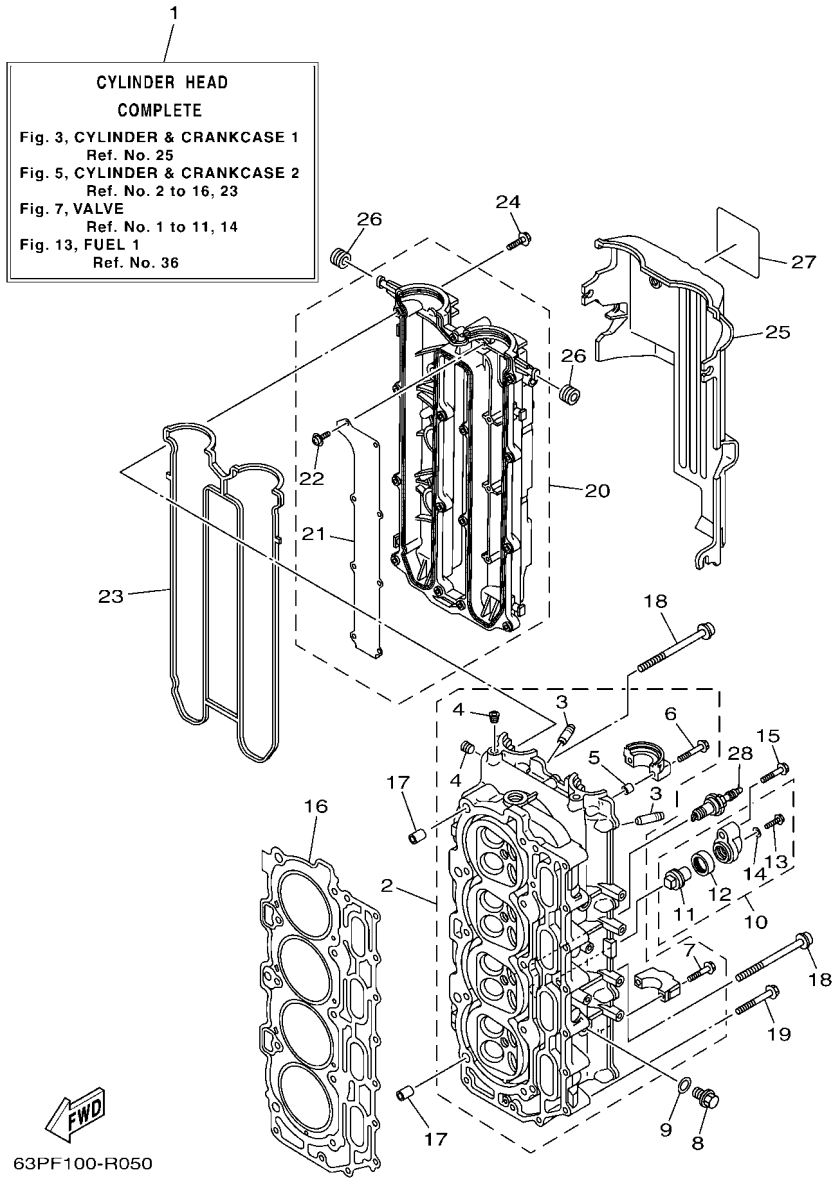

FIG. 5 CYLINDER & CRANKCASE 2 — CILINDRO & CARTER 2

REF. NO.	PART NO. CODIGO Nº	DESCRIPTION DESCRIPCION	6BME	6BNE				REMARKS OBSERVACIONES
1	63P–W009A–06–9S	CYLINDER HEAD COMPLETE CILINDRD CULATA COMPLETO	1	1				～6BM-1012653, ～6BN-1002562 ～6BM-1012653, ～6BN-1002562
	6BM–W009A–10–9S	CYLINDER HEAD COMPLETE CILINDRD CULATA COMPLETO	1	1				6BM-1012654～, 6BN-1002563～ 6BM-1012654～, 6BN-1002563～
2	63P–11110–11–9S	CYLINDER HEAD ASSY CULATA DE CILINDRO COMPLETA	1	1				
3	6DA–11133–10	.GUIDE, VALVE 1 .GUIA DE VALVULA 1	16	16				
4	90344–51019	.PLUG, TAPER SCREW .TAPON DE TORNILLO AHUSADO	3	3				
5	91809–08006	.PIN, DOWEL .PASADOR DE CLAVIJA	4	4				
6	90119–07235	.BOLT/WASHER-CAM CAPS .TORNILLO CON ARANDELA	4	4				
7	90119–07234	.BOLT, WITH WASHER .TORNILLO CON ARANDELA	16	16				
8	90340–14M06	PLUG, STRAIGHT SCREW TORNILLO, DE DRENAJE	2	2				
9	90430–14115	GASKET JUNTA	2	2				
10	69J–11301–01	ANODE COVER ASSY CONJUNTO CUBIERTA DE ANODO	2	2				
11	67F–11325–01	.ANODE .ANODO	1	1				
12	67F–11328–01	.GROMMET, ANODE .TAPON	1	1				
13	90105–06M07	.BOLT, FLANGE .TORNILLO	1	1				
14	90430–06M03	.GASKET .JUNTA	1	1				
15	97E75–08540	BOLT, HEXAGON W/W DEEP RECESS TORNILLO HEXAGONAL CON RONDONA	2	2				
16	63P–11181–00	GASKET, CYLINDER HEAD 1 JUNTA, DE CULATA 1	1	1				
17	99530–14016	PIN, DOWEL PASADOR, DE ESPIGA	2	2				
18	90155–10010	SCREW, FLAT FILLISTER TORNILLO CABEZA PLANA RAN.	10	10				
19	90119–08M91	BOLT, WITH WASHER TORNILLO CON ARANDELA	10	10				
20	63P–11191–00–9S	COVER, CYLINDER HEAD 1 TAPA CULATA DE CILINDRO 1	1	1				
21	63P–11135–00	.PLATE, BREATHER 3 .PLACA RESPIRADERO 3	1	1				
22	97607–04208	.SCREW, WITH WASHER .TORNILLO CAB CON PLANA C/ARAN	8	8				
23	63P–11193–00	GASKET, HEAD COVER 1 EMPAQUE	1	1				
24	97E95–06530	BOLT, HEXAGON W/W DEEP RECESS TORNILLO HEXAGONAL CON RONDONA	13	13				
25	63P–11192–01	COVER, CYLINDER HEAD 2 TAPA CULATA DE CILINDRO 2	1	1				
26	90480–12314	GROMMET TAPON	5	5				

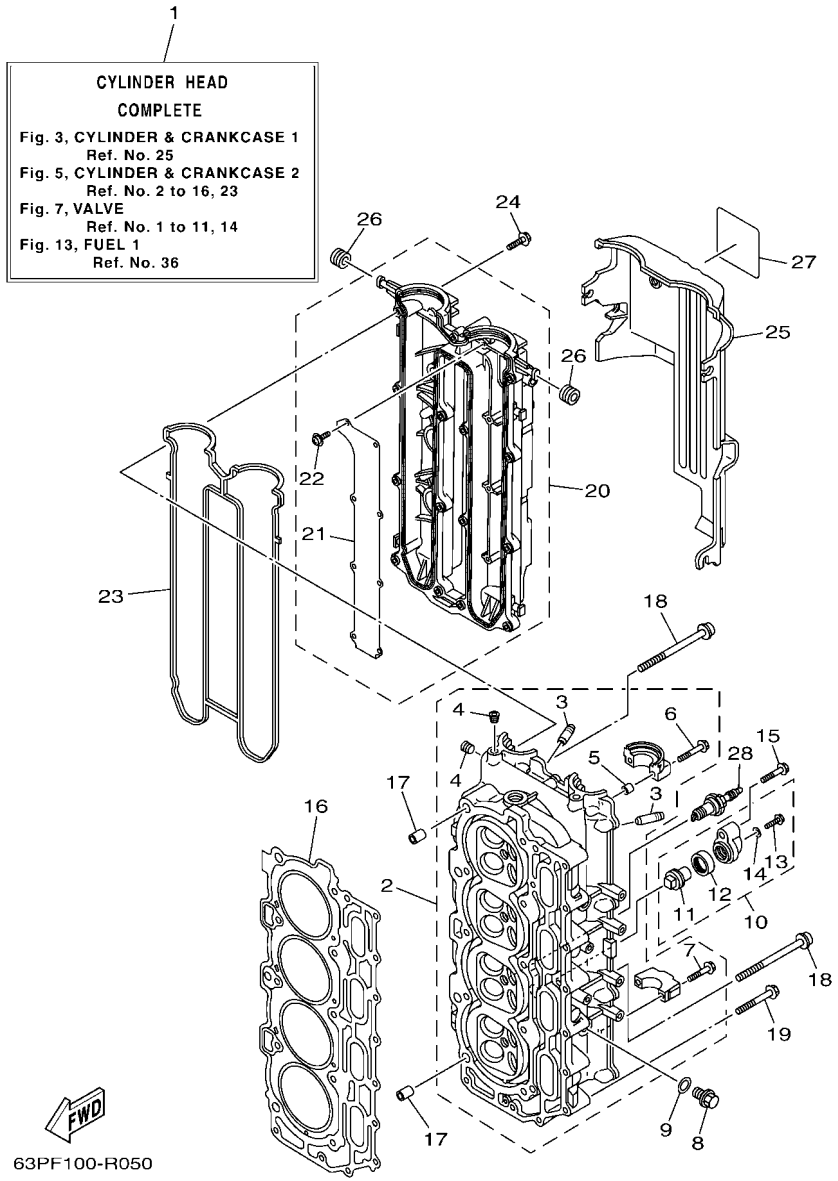

FIG. 5 CYLINDER & CRANKCASE 2 — CILINDRO & CARTER 2

REF. NO.	PART NO. CODIGO Nº	DESCRIPTION DESCRIPCION	6BME	6BNE				REMARKS OBSERVACIONES
27	63P–83626–00	MARK 6 MARCA 6	1	1				
28	94702–00391	PLUG, SPARK (NGK LFR5A-11) BUJIA (NGK LFR5A-11)	4	4				

FIG. 6 CYLINDER & CRANKCASE 3 — CILINDRO & CARTER 3

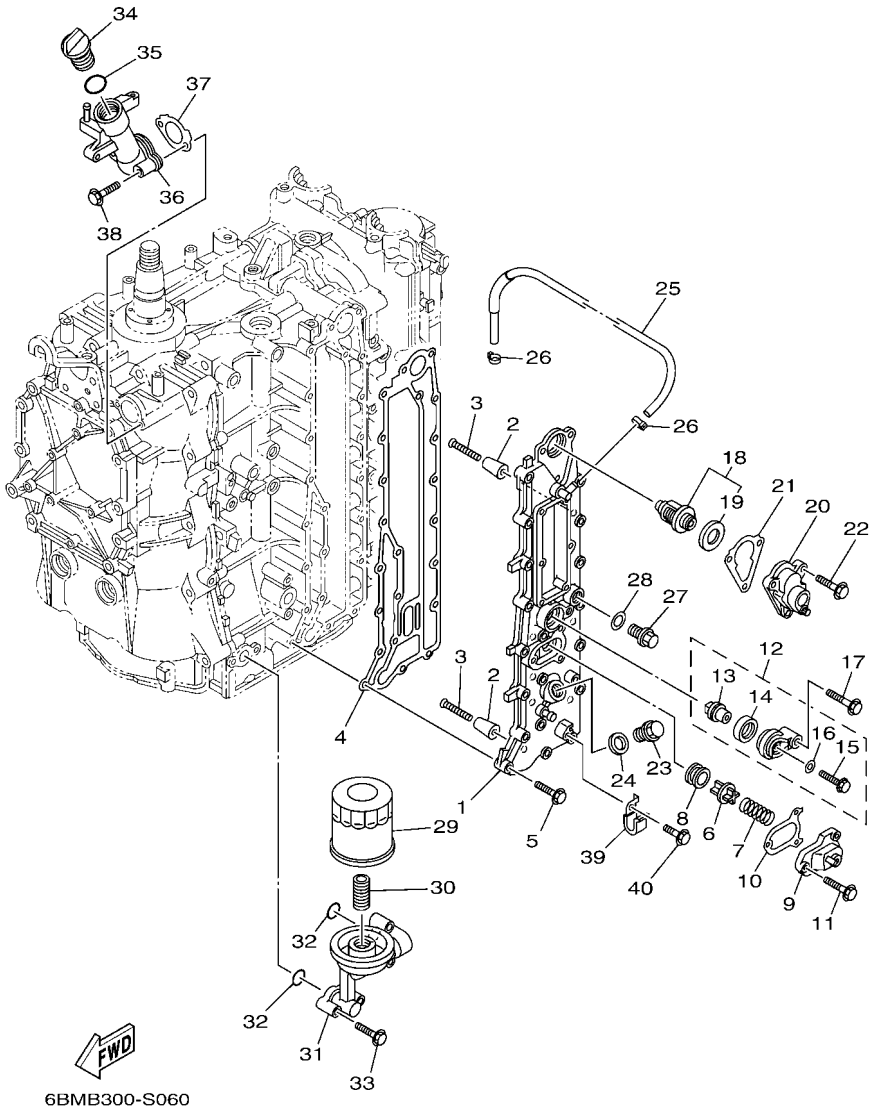

REF. NO.	PART NO. CODIGO Nº	DESCRIPTION DESCRIPCION	6BME	6BNE				REMARKS OBSERVACIONES
1	63P–41113–04–9S	OUTER COVER, EXHAUST CUBOERTA EXTERIOR DE ESCAPE	1	1				
2	68T–11325–00	ANODE ANODO	8	8				
3	90151–05M05	SCREW, COUNTERSUNK TORNILLO EMBUTIDO	8	8				
4	63P–41114–A3	GASKET, EXHAUST OUTER COVER EMPAQUE	1	1				
5	90119–06MA4	BOLT, WITH WASHER TORNILLO CON ARANDELA	19	19				
6	6G5–12416–00	VALVE, PRESSURE CONTROL VALVULA DE CONTROL DE PRESION	1	1				
7	90501–16M11	SPRING, COMPRESSION RESORTE DE COMPRESION	1	1				
8	90480–20M05	GROMMET TAPON	1	1				
9	67F–1246A–A0–9S	COVER 1 CUBIERTA 1	1	1				
10	67F–12435–A0	GASKET EMPAQUE	1	1				
11	90119–06MA2	BOLT, WITH WASHER TORNILLO CON ARANDELA	3	3				
12	69J–11301–01	ANODE COVER ASSY CONJUNTO CUBIERTA DE ANODO	1	1				
13	67F–11325–01	.ANODE .ANODO	1	1				
14	67F–11328–01	.GROMMET, ANODE .TAPON	1	1				
15	90105–06M07	.BOLT, FLANGE .TORNILLO	1	1				
16	90430–06M03	.GASKET .JUNTA	1	1				
17	97E75–08540	BOLT, HEXAGON W/W DEEP RECESS TORNILLO HEXAGONAL CON RONDONA	1	1				
18	67F–12411–01	THERMOSTAT TERMOSTAT	1	1				
19	67F–12412–00	.SEAL, THERMOSTAT .SELLO TERMOSTATO	1	1				
20	63P–1240H–01–9S	COVER ASSEMBLY CUBIERTA COPL.	1	1				
21	63P–12414–00	GASKET, COVER EMPAQUE	1	1				
22	90119–06MA4	BOLT, WITH WASHER TORNILLO CON ARANDELA	3	3				
23	90340–18M09	PLUG, STRAIGHT SCREW TORNILLO, DE DRENAJE	1	1				
24	90201–186F1	WASHER, PLATE ARANDELA PLANA	1	1				
25	63P–1243A–00	HOSE 1 TUBO 1	1	1				
26	90465–11M10	CLAMP BRIDA	2	2				
27	90340–14M06	PLUG, STRAIGHT SCREW TORNILLO, DE DRENAJE	1	1				

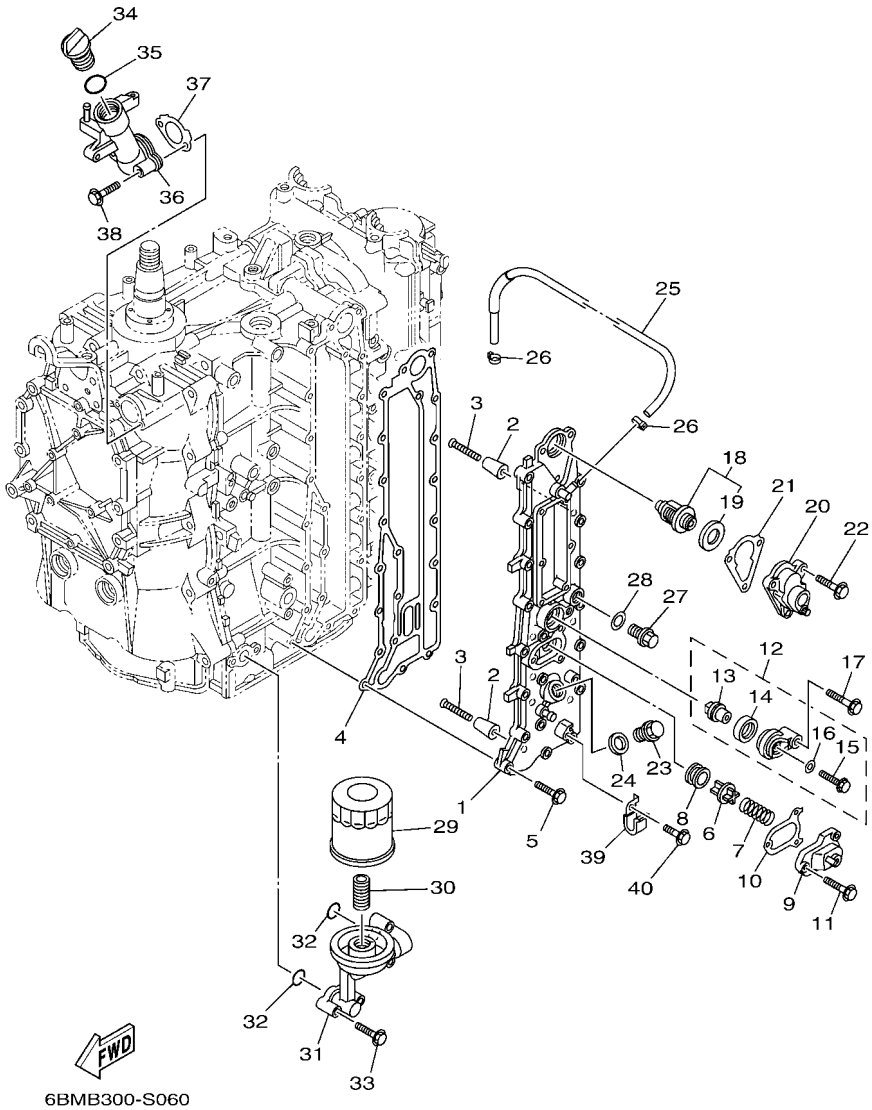

FIG. 6 CYLINDER & CRANKCASE 3 — CILINDRO & CARTER 3

REF. NO.	PART NO. CODIGO Nº	DESCRIPTION DESCRIPCION	6BME	6BNE				REMARKS OBSERVACIONES
28	90430–14115	GASKET JUNTA	1	1				
29	69J–13440–04	ELEMENT ASSY, OIL CLEANER ELEMENTO FILTRO DE ACEITE	1	1				
30	6S5–12858–00	BOLT, UNION PERNO DE UNION	1	1				
31	63P–13446–01	CONNECTOR CONECTOR	1	1				
32	93210–19MJ1	O-RING ANILLO O	2	2				
33	97E75–06540	BOLT, HEXAGON W/W DEEP RECESS TORNILLO HEXAGONAL CON RONDONA	4	4				
34	6G8–15363–00	PLUG, OIL TAPON DE ACEITE	1	1				
35	93210–24M79	O-RING ANILLO O	1	1				
36	63P–15319–00–9S	JOINT CONECTOR	1	1				
37	63P–15364–A0	GASKET, OIL PLUG EMPAQUE TAPON DE ACEITE	1	1				
38	97E95–06545	BOLT, HEXAGON W/W DEEP RECESS TORNILLO HEXAGONAL CON RONDONA	2	2				
39	90462–06013	CLAMP BRIDA	1	1				
40	97E95–06512	BOLT, HEXAGON W/W DEEP RECESS TORNILLO HEXAGONAL CON RONDONA	1	1				

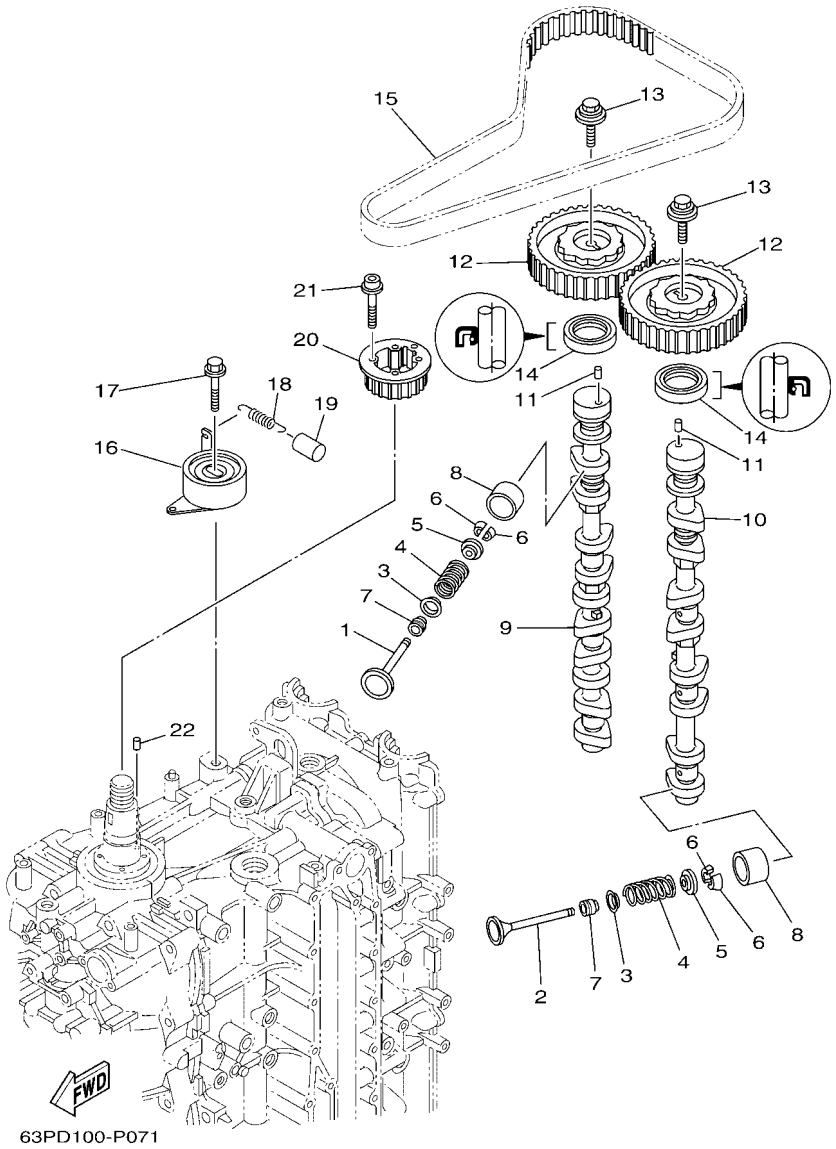

FIG. 7 VALVE — VALVULA

REF. NO.	PART NO. CODIGO Nº	DESCRIPTION DESCRIPCION	6BME	6BNE				REMARKS OBSERVACIONES
1	63P–12111–00	VALVE, INTAKE VALVULA DE ADMISION	8	8				
2	63P–12121–00	VALVE, EXHAUST VALVULA DE ESCAPE	8	8				～6BM-1012653, ～6BN-1002562 ～6BM-1012653, ～6BN-1002562
	6BM–12121–00	VALVE, EXHAUST VALVULA DE ESCAPE	8	8				6BM-1012654～, 6BN-1002563～ 6BM-1012654～, 6BN-1002563～
3	K0F–A3743–00	SEAT, VALVE SPRING ASIENTO RESORTE DE VALVULA	16	16				
4	6CB–12113–00	SPRING, VALVE INNER RESORTE VALVULA INTERNA	16	16				
5	K0F–A3741–00	RETAINER, VALVE SPRING RETEN RESORTE DE VALVULA	16	16				
6	K0F–A3742–00	LOCK, VALVE SPRING RETAINER SEGURO DE VALVULA	32	32				
7	51Y–12119–00	SEAL, VALVE STEM SELLO DE ACEITE VALVULA	16	16				
8	K0F–A3751–00	LIFTER, VALVE (3.000) LEVANTADOR DE VALVULA (3.000)	16	16				UR UR
	K0F–A3751–10	LIFTER, VALVE (3.025) LEVANTADOR DE VALVULA (3.025)	16	16				UR UR
	K0F–A3751–20	LIFTER, VALVE (3.050) LEVANTADOR DE VALVULA (3.050)	16	16				UR UR
	K0F–A3751–30	LIFTER, VALVE (3.075) LEVANTADOR DE VALVULA (3.075)	16	16				UR UR
	K0F–A3751–40	LIFTER, VALVE (3.100) LEVANTADOR DE VALVULA (3.100)	16	16				UR UR
	K0F–A3751–50	LIFTER, VALVE (3.122) LEVANTADOR DE VALVULA (3.122)	16	16				UR UR
	K0F–A3751–60	LIFTER, VALVE (3.142) LEVANTADOR DE VALVULA (3.142)	16	16				UR UR
	K0F–A3751–70	LIFTER, VALVE (3.162) LEVANTADOR DE VALVULA (3.162)	16	16				UR UR
	K0F–A3751–80	LIFTER, VALVE (3.182) LEVANTADOR DE VALVULA (3.182)	16	16				UR UR
	K0F–A3751–90	LIFTER, VALVE (3.202) LEVANTADOR DE VALVULA (3.202)	16	16				UR UR
	K0F–A3751–A0	LIFTER, VALVE (3.222) LEVANTADOR DE VALVULA (3.222)	16	16				UR UR
	K0F–A3751–B0	LIFTER, VALVE (3.242) LEVANTADOR DE VALVULA (3.242)	16	16				UR UR
	K0F–A3751–C0	LIFTER, VALVE (3.262) LEVANTADOR DE VALVULA (3.262)	16	16				UR UR
	K0F–A3751–D0	LIFTER, VALVE (3.282) LEVANTADOR DE VALVULA (3.282)	16	16				UR UR
	K0F–A3751–E0	LIFTER, VALVE (3.302) LEVANTADOR DE VALVULA (3.302)	16	16				UR UR
	K0F–A3751–F0	LIFTER, VALVE (3.322) LEVANTADOR DE VALVULA (3.322)	16	16				UR UR
	K0F–A3751–G0	LIFTER, VALVE (3.342) LEVANTADOR DE VALVULA (3.342)	16	16				UR UR
	K0F–A3751–H0	LIFTER, VALVE (3.362) LEVANTADOR DE VALVULA (3.362)	16	16				UR UR
	K0F–A3751–J0	LIFTER, VALVE (3.382) LEVANTADOR DE VALVULA (3.382)	16	16				UR UR

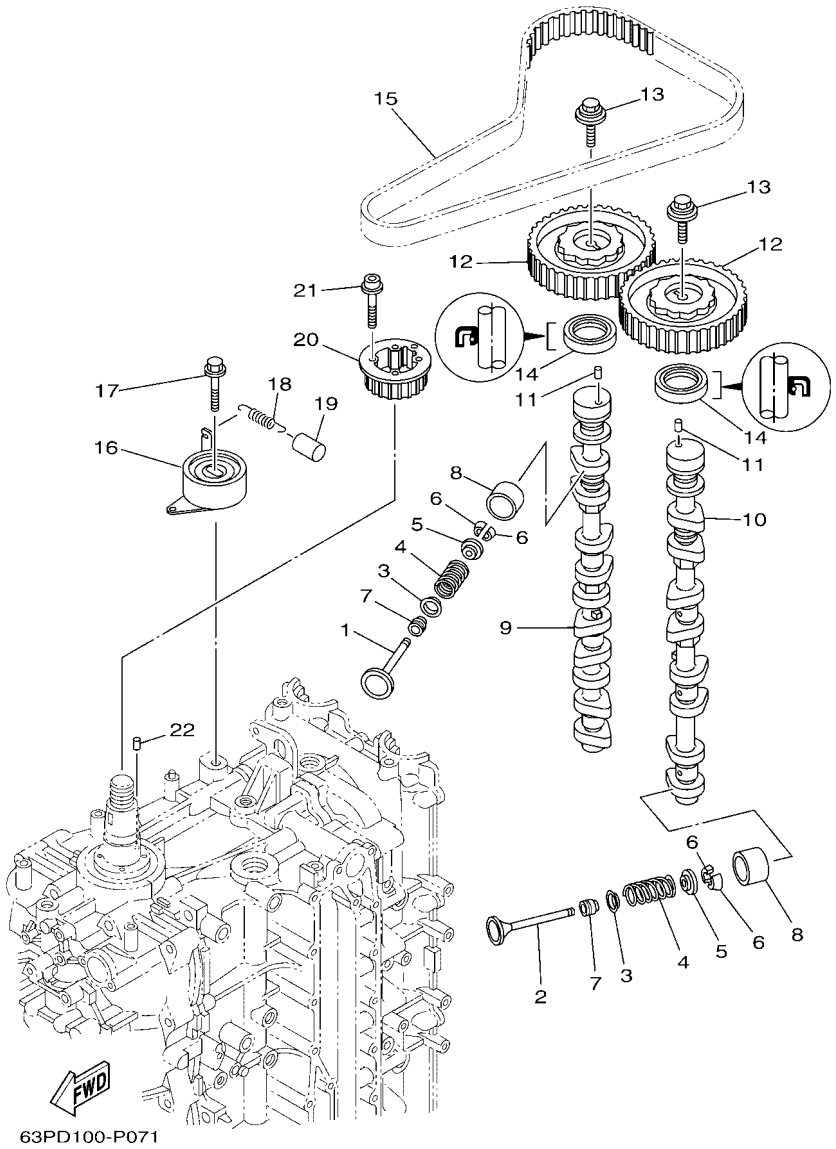

FIG. 7 VALVE — VALVULA

REF. NO.	PART NO. CODIGO Nº	DESCRIPTION DESCRIPCION	6BME	6BNE				REMARKS OBSERVACIONES
8	K0F–A3751–K0	LIFTER, VALVE (3.402) LEVANTADOR DE VALVULA (3.402)	16	16				UR UR
	K0F–A3751–L0	LIFTER, VALVE (3.422) LEVANTADOR DE VALVULA (3.422)	16	16				UR UR
	K0F–A3751–M0	LIFTER, VALVE (3.442) LEVANTADOR DE VALVULA (3.442)	16	16				UR UR
	K0F–A3751–N0	LIFTER, VALVE (3.462) LEVANTADOR DE VALVULA (3.462)	16	16				UR UR
	K0F–A3751–P0	LIFTER, VALVE (3.482) LEVANTADOR DE VALVULA (3.482)	16	16				UR UR
	K0F–A3751–R0	LIFTER, VALVE (3.502) LEVANTADOR DE VALVULA (3.502)	16	16				UR UR
	K0F–A3751–S0	LIFTER, VALVE (3.522) LEVANTADOR DE VALVULA (3.522)	16	16				UR UR
	K0F–A3751–T0	LIFTER, VALVE (3.542) LEVANTADOR DE VALVULA (3.542)	16	16				UR UR
	K0F–A3753–00	LIFTER, VALVE (3.562) LEVANTADOR DE VALVULA (3.562)	16	16				UR UR
	K0F–A3753–10	LIFTER, VALVE (3.582) LEVANTADOR DE VALVULA (3.582)	16	16				UR UR
	K0F–A3753–20	LIFTER, VALVE (3.602) LEVANTADOR DE VALVULA (3.602)	16	16				UR UR
	K0F–A3753–30	LIFTER, VALVE (3.625) LEVANTADOR DE VALVULA (3.625)	16	16				UR UR
	K0F–A3753–40	LIFTER, VALVE (3.650) LEVANTADOR DE VALVULA (3.650)	16	16				UR UR
	K0F–A3753–50	LIFTER, VALVE (3.675) LEVANTADOR DE VALVULA (3.675)	16	16				UR UR
	K0F–A3753–60	LIFTER, VALVE (3.700) LEVANTADOR DE VALVULA (3.700)	16	16				UR UR
	K0F–A3753–70	LIFTER, VALVE (3.725) LEVANTADOR DE VALVULA (3.725)	16	16				UR UR
9	63P–12171–10	CAMSHAFT 1 ARBOL DE LEVAS 1	1	1				
10	63P–12181–10	CAMSHAFT 2 ARBOL DE LEVAS 2	1	1				
11	93605–10108	PIN, DOWEL PASADOR DE CLAVIJA	2	2				
12	63P–11537–00	GEAR, DRIVEN ENGRANAJE TRACCION	2	2				
13	90119–10050	BOLT, WITH WASHER TORNILLO CON ARANDELA	2	2				
14	93102–38008	OIL SEAL SELLO ACEITE	2	2				
15	63P–46241–00	BELT CORREA	1	1				
16	63P–11590–10	TENSIONER ASSY TENSOR COMPLET	1	1				
17	90119–10M07	BOLT, WITH WASHER TORNILLO CON ARANDELA	1	1				
18	90506–16M39	SPRING, TENSION RESORTE DE TENSION	1	1				
19	90445–15M03	HOSE (L23) TUBO (L23)	1	1				

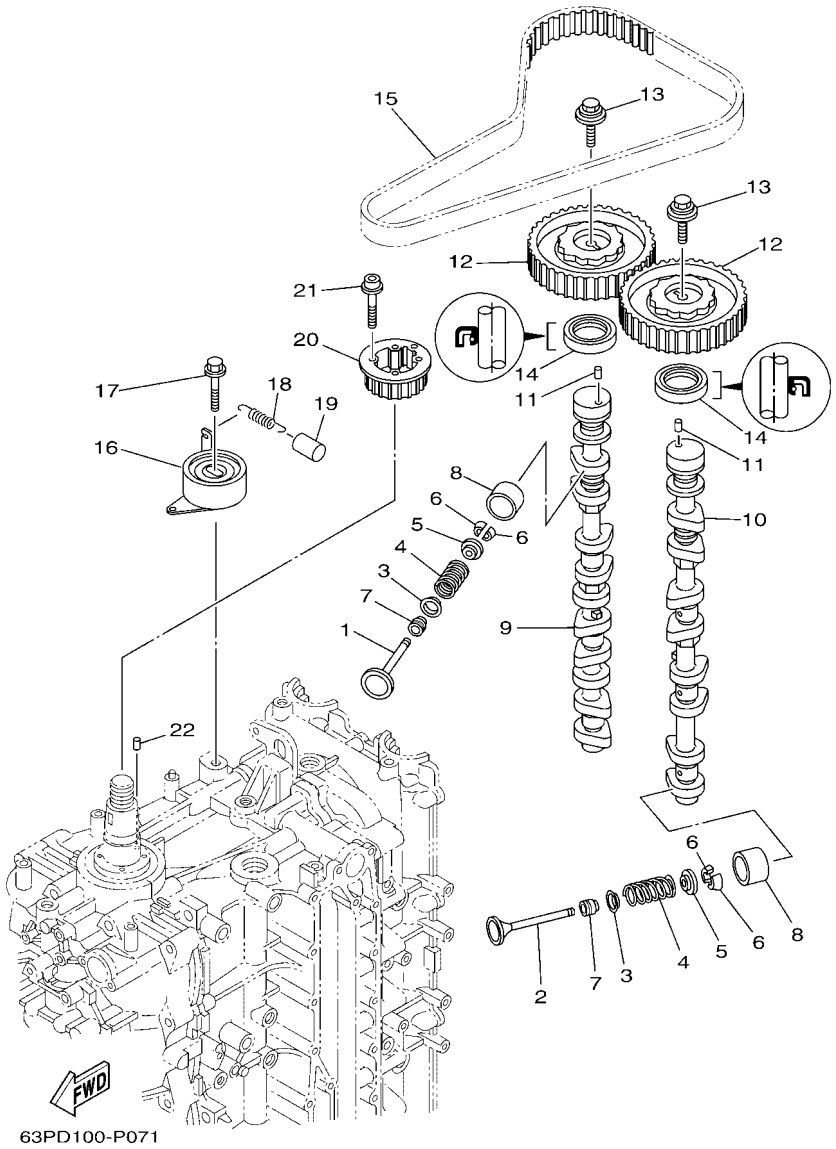

FIG. 7 VALVE — VALVULA

REF. NO.	PART NO. CODIGO Nº	DESCRIPTION DESCRIPCION	6BME	6BNE				REMARKS OBSERVACIONES
20	63P–11536–01	GEAR, DRIVE ENGRANAJE TRACCION	1	1				
21	90110–05020	BOLT, HEXAGON SOCKET HEAD TORNILLO ALLEN	4	4				
22	93605–17002	PIN, DOWEL PASADOR DE CLAVIJA	1	1				

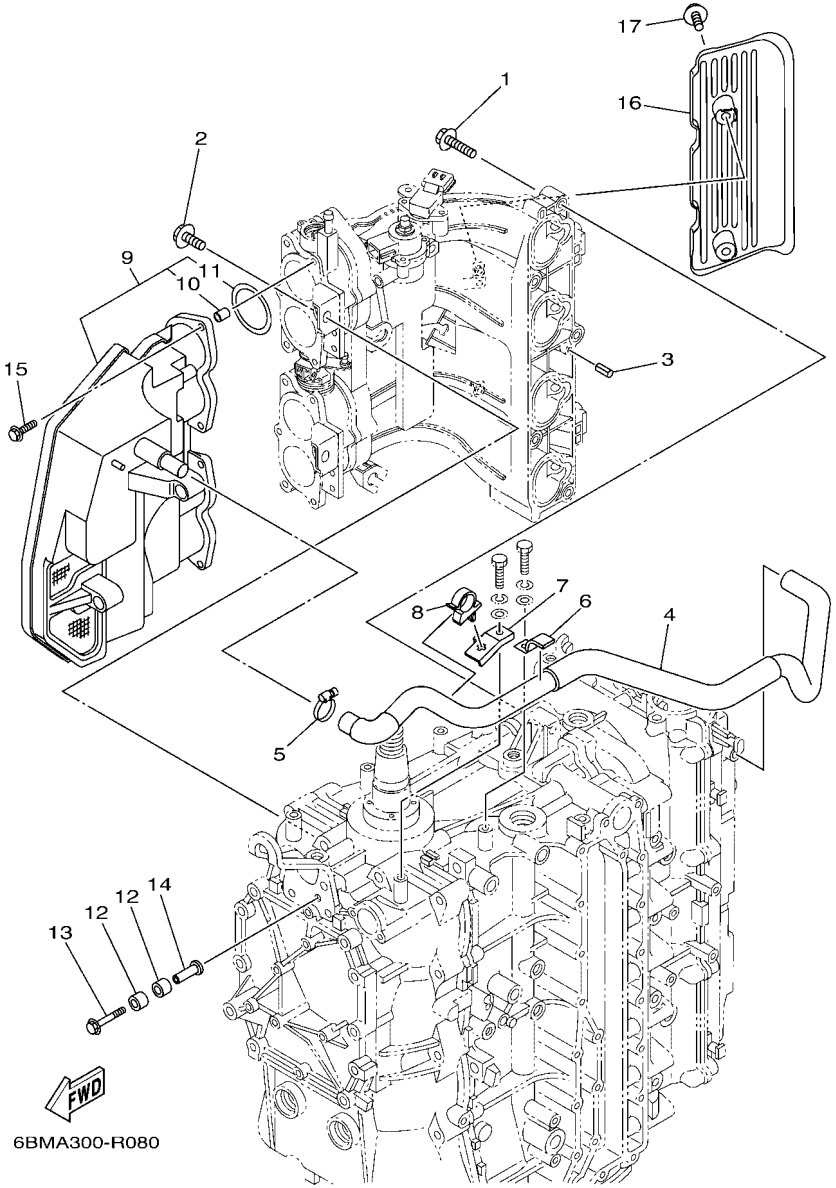

FIG. 8 INTAKE 1 — ADMISION 1

REF. NO.	PART NO. CODIGO Nº	DESCRIPTION DESCRIPCION	6BME	6BNE				REMARKS OBSERVACIONES
1	97E75–08540	BOLT, HEXAGON W/W DEEP RECESS TORNILLO HEXAGONAL CON RONDONA	5	5				
2	97513–08520	BOLT, WITH WASHER PERNO CON ARANDELA	2	2				
3	91690–50014	PIN, SPRING PASADOR DE RESORTE	2	2				
4	6BM–15373–00	PIPE, BREATHER MANGUELA DE RESPIRADERO	1	1				
5	90450–22M14	HOSE CLAMP ASSY BRIDA, MANGUERA	1	1				
6	90462–10051	CLAMP BRIDA	1	1				
7	63P–15378–00	HOLDER SOPORTE	1	1				
8	90464–20006	CLAMP BRIDA	1	1				
9	63P–14440–00	SILENCER ASSY, INTAKE SILENCIADOR COMPL DE ADMISION	1	1				
10	63P–14449–00	.COLLAR .COLLAR	6	6				
11	63P–14457–00	.SEAL .SELLO	4	4				
12	90386–08005	BUSH BUJE	4	4				
13	90119–06301	BOLT, WITH WASHER TORNILLO CON ARANDELA	2	2				
14	90387–06280	COLLAR ESPACIADOR	2	2				
15	90119–06283	BOLT, WITH WASHER TORNILLO CON ARANDELA	6	6				
16	63P–13564–00	COVER, MANIFOLD CUBIERTA DE MULTIPLE	1	1				
17	95D95–06016	BOLT, FLANGE DEEP RECESS CERROJO, REBORDE HUECO PROFUND	2	2				

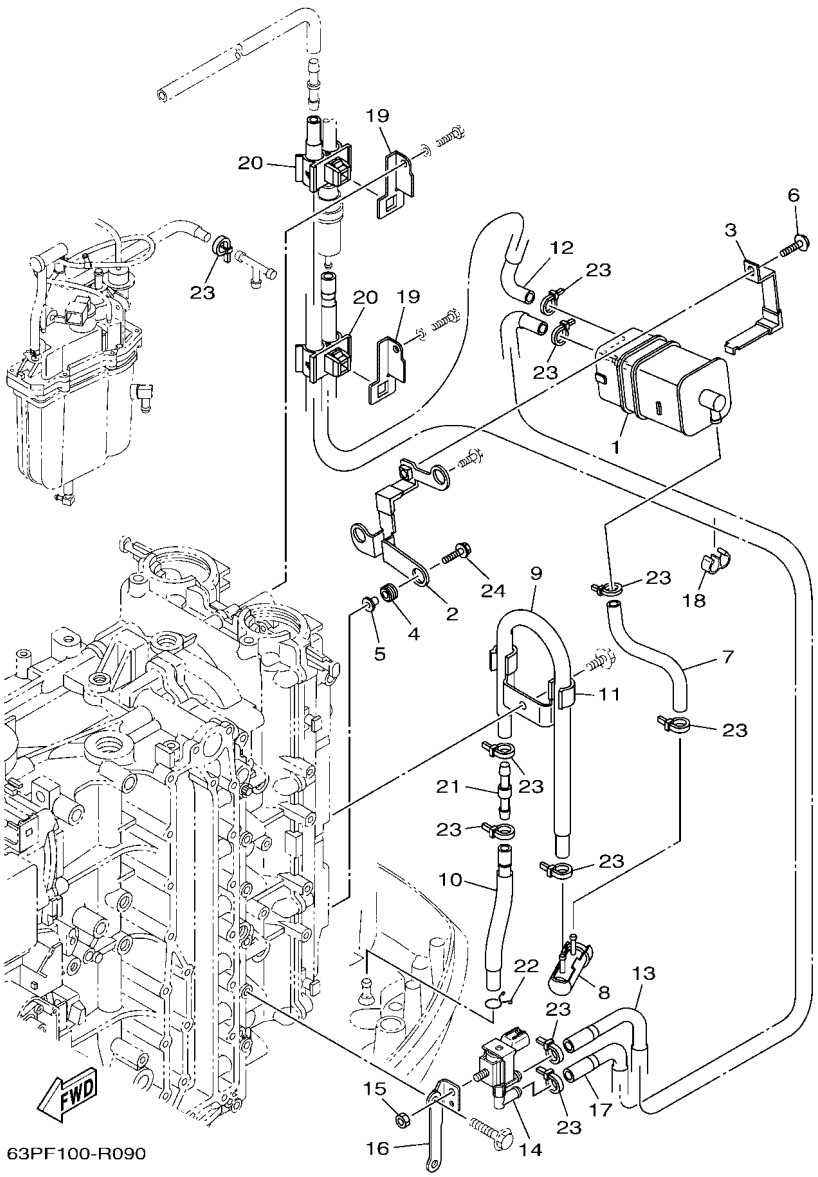

FIG. 9 INTAKE 2 — ADMISION 2

REF. NO.	PART NO. CODIGO Nº	DESCRIPTION DESCRIPCION	6BME	6BNE				REMARKS OBSERVACIONES
1	6P2–24170–00	CANISTER ASSY FRANJA DE DEPOSITO DE COMBUST.	1	1				
2	63P–2134X–00	BRACKET, CANISTER SOPORTE	1	1				
3	63P–2419A–01	HOLDER SOSTEN	1	1				
4	90480–10M23	GROMMET TAPON	3	3				
5	90387–06289	COLLAR ESPACIADOR	3	3				
6	97E95–06516	BOLT, HEXAGON W/W DEEP RECESS TORNILLO HEXAGONAL CON RONDONA	1	1				
7	64P–24313–00	PIPE 3 TUBO 3	1	1				
8	69J–24502–00	FILTER, FUEL FIELTRO	1	1				
9	64P–24312–00	PIPE 2 TUBO 2	1	1				
10	64P–24311–10	PIPE, FUEL 1 TUBO DE COMBUSTIBLE 1	1	1				
11	63P–24367–01	CLAMP, FUEL PIPE 2 GRAMPA DE TUBO DE COMBUST.2	1	1				
12	64P–24315–00	PIPE 5 TUBO DE DESAGUE	1	1				
13	64P–24316–10	PIPE 6 TUBO 6	1	1				
14	6C5–86120–00	SOLENOID VALVE ASSY VALVULA SOLENOIDE CONJ.	1	1				
15	95380–06600	NUT, HEXAGON TUERCA	1	1				
16	63P–81845–20	PLATE PLACA	1	1				
17	64P–24314–10	PIPE 4 TUBO 4	1	1				
18	90464–09M31	CLAMP BRIDA	1	1				
19	63P–24364–01	STAY SOPORTE	2	2				
20	90464–11012	CLAMP BRIDA	2	2				
21	6E5–24379–00	PIPE, JOINT 4 TUBO DE UNION 4	1	1				
22	90467–09M09	CLIP PRESILLA	1	1				
23	90465–11M10	CLAMP BRIDA	10	10				
24	90119–06135	BOLT, WITH WASHER TORNILLO CON ARANDELA	2	2				

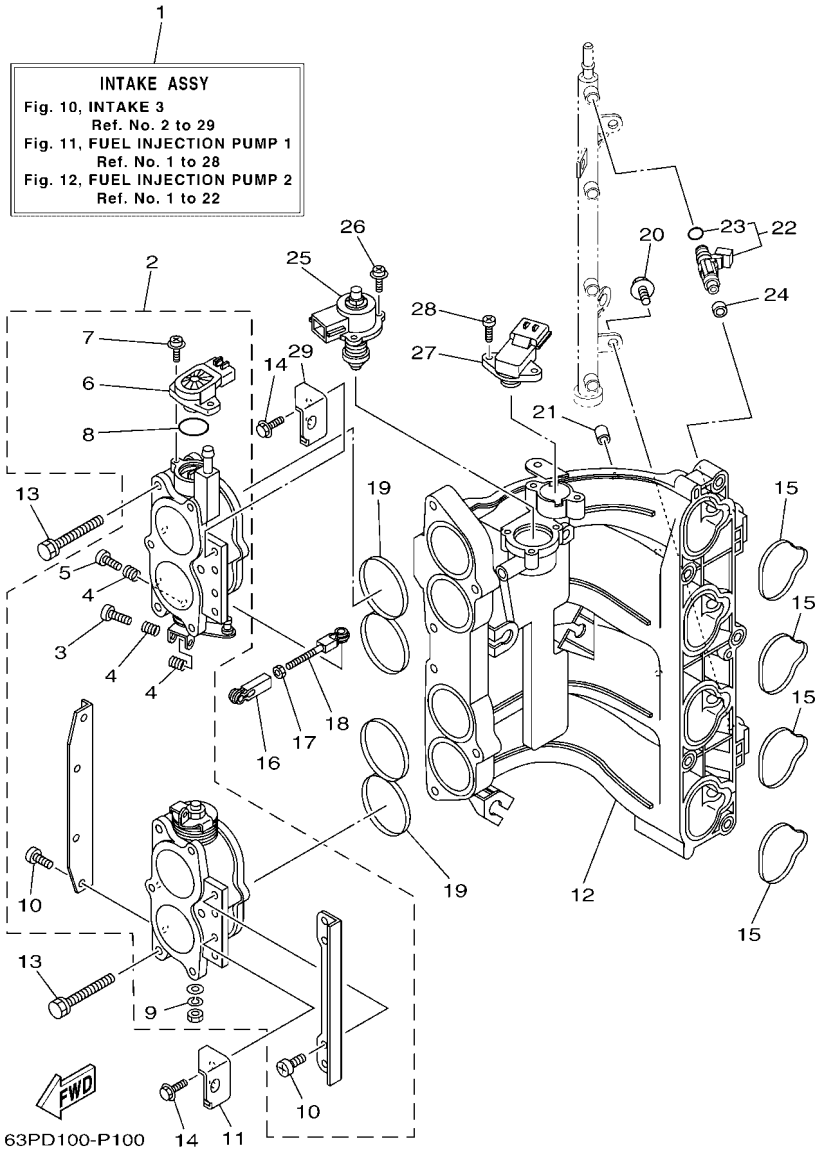

FIG. 10 INTAKE 3 — ADMISION 3

REF. NO.	PART NO. CODIGO Nº	DESCRIPTION DESCRIPCION	6BME	6BNE				REMARKS OBSERVACIONES
1	63P–14200–63	INTAKE ASSY ADMISION COMPL.	1	1				EXCEPT FOR CAR EXCEPT FOR CAR
	63P–14200–83	INTAKE ASSY ADMISION COMPL.	1	1				FOR CAR FOR CAR
2	63P–13751–21	BODY, THROTTLE 1 CAJA 1	1	1				
3	69J–14321–00	.SCREW, THROTTLE .TORNILLO DE OBTURADOR	1	1				
4	68V–14331–00	.SPRING, THROTTLE VALVE .RESORTE VALVULA ACELERADOR	3	3				
5	68V–14323–00	.SCREW, AIR ADJUSTING .TORNILLO DE AJUSTE DE AIRE	1	1				
6	6S1–85885–01	.THROTTLE SENSOR ASSY .TERMICA SENSORIO	1	1				
7	68V–81145–01	.SCREW 1 .TORNILLO 1	2	2				
8	68V–8182L–00	.O-RING 1 .ANILLO EN O	1	1				
9	68V–14356–00	.WASHER, SPRING .ARANDELA DE RESORTE	1	1				
10	68V–14565–00	.SCREW .TORNILLO	8	8				
11	63P–14291–00	BRACKET 1 SOPORTE 1	1	1				
12	63P–13641–10	MANIFOLD, INTAKE 1 CONECTOR DE ADMISSION 1	1	1				
13	63P–14496–00	BOLT PERNO	6	6				
14	97E95–06516	BOLT, HEXAGON W/W DEEP RECESS TORNILLO HEXAGONAL CON RONDONA	4	4				
15	63P–13645–00	GASKET, MANIFOLD 1 EMPAQUE	4	4				
16	6H4–41237–00	JOINT, LINK CONECTOR	1	1				
17	95380–05700	NUT TUERCA	1	1				
18	682–41238–01	JOINT, LINK CONECTOR	1	1				
19	63P–13557–00	GASKET EMPAQUE	2	2				
20	6P2–14446–00	BOLT PERNO	2	2				
21	63P–13643–00	COVER, MANIFOLD CUBIERTA DE COLECTOR	4	4				
22	63P–13761–01	INJECTOR INYECTOR	4	4				
23	68V–1416A–00	.O-RING .ANILLO O	1	1				
24	68V–13766–00	RUBBER, INJECTOR ANILLO PROTECTOR	4	4				
25	63P–1312A–01	VALVE, CONTROL VENTIL,STEUERUNG	1	1				
26	68V–81146–01	SCREW 2 TORNILLO 2	3	3				

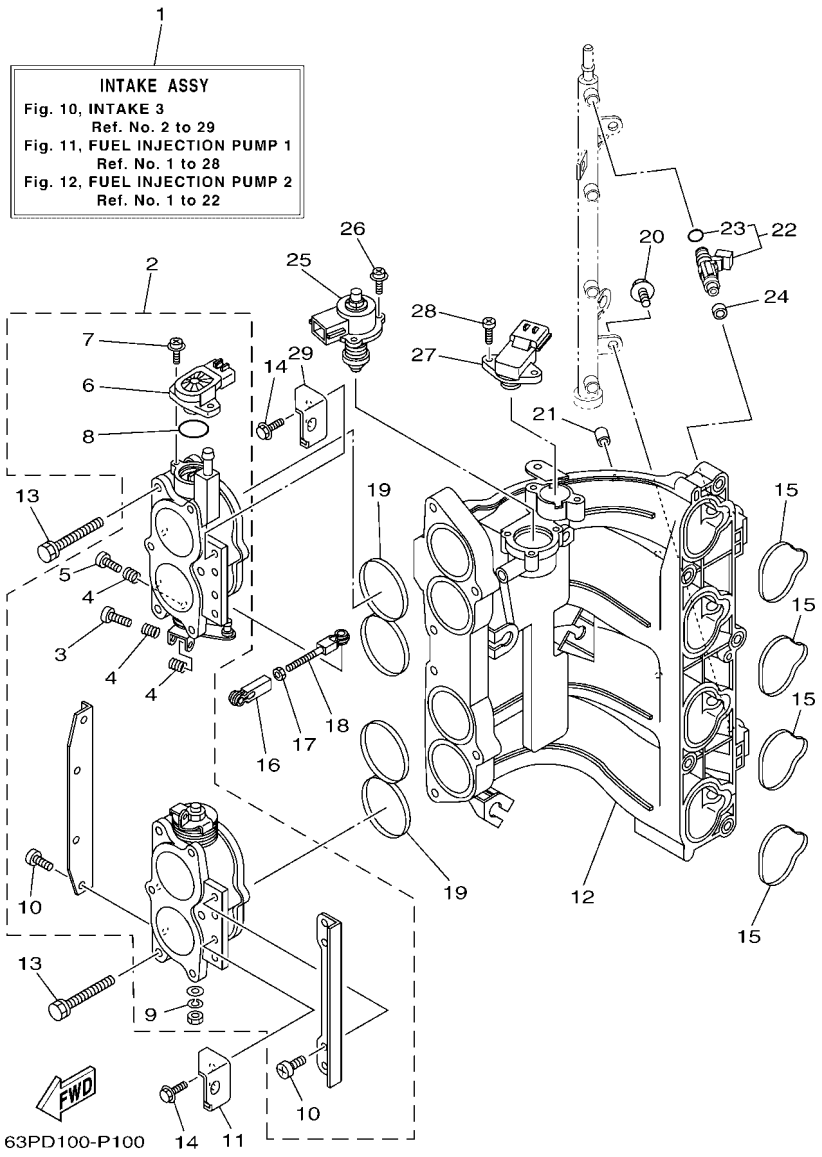

FIG. 10 INTAKE 3 — ADMISION 3

REF. NO.	PART NO. CODIGO Nº	DESCRIPTION DESCRIPCION	6BME	6BNE				REMARKS OBSERVACIONES
27	63P–82380–00	SENSOR, PRESSURE SENSOR DE PRESION	1	1				
28	68V–81147–00	SCREW 3 TORNILLO 3	2	2				
29	63P–14292–00	BRACKET 2 SOPORTE 2	1	1				

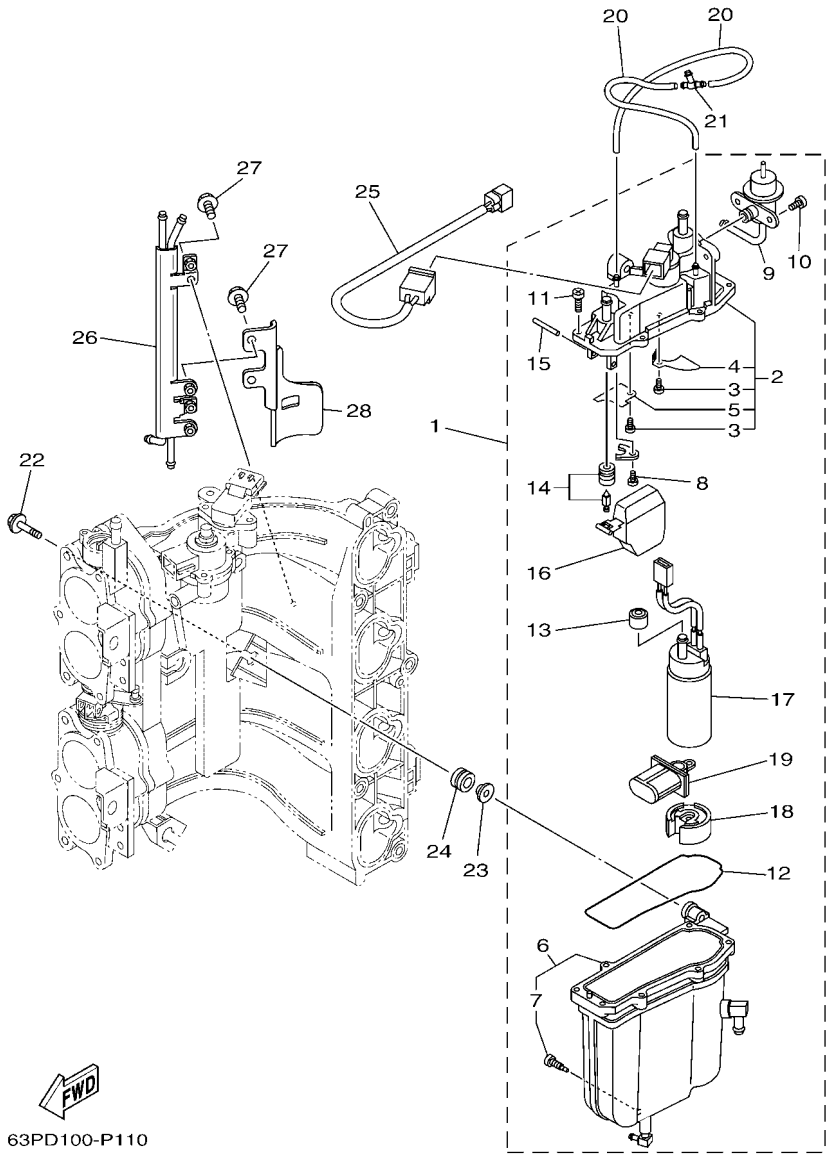

FIG. 11 FUEL INJECTION PUMP 1 — BOMBA DE INYECTOR 1

REF. NO.	PART NO. CODIGO Nº	DESCRIPTION DESCRIPCION	6BME	6BNE				REMARKS OBSERVACIONES
1	63P–14180–21	FLOAT CHAMBER ASSY CAMARA DE BOYA COMPLETE	1	1				
2	63P–14182–20	.COVER, FLOAT CHAMBER .TAPA DE CAMARA DE BOIA	1	1				
3	4SV–24453–00	..SCREW ..TORNILLO	2	2				
4	63P–2411R–00	..PLATE 1 ..PLACA 1	1	1				
5	63P–2411T–00	..PLATE 2 ..PLACA 2	1	1				
6	63P–14181–20	.BODY, FLOAT CHAMBER 1 .CUERPO DE CAMARA DE BOIA	1	1				
7	63P–14191–00	..PLUG, DRAIN ..TORNILLO, DE DRENAJE	1	1				
8	4SV–24453–00	.SCREW .TORNILLO	1	1				
9	63P–13906–00	.REGULATOR, PRESSURE .REGULADOR	1	1				
10	63P–14565–00	.SCREW .TORNILLO	1	1				
11	63P–14567–00	.SCREW .TORNILLO	7	7				
12	63P–14984–00	.GASKET, FLOAT CHAMBER .EMPAQUE CAMARA DE BOIA	1	1				
13	68V–13781–20	.GROMMET & COLLAR SET .TOPON Y COLLAR	1	1				
14	63P–14546–00	.VALVE, NEEDLE .VALVULA DE AGUJA	1	1				
15	68V–14386–00	.PIN, FLOAT .PASADOR DE BOIA	1	1				
16	63P–14985–00	.FLOAT .BOIA	1	1				
17	63P–13907–04	.FUEL PUMP COMP. .BOMBA DE COMBUSTIBLE COMPLETA	1	1				
18	63P–13784–00	.COVER, PUMP .CUBIERTA DE BOMBA	1	1				
19	63P–13915–00	.FILTER .FILTRO	1	1				
20	63P–14148–00	PIPE TUBO	2	2				
21	69J–24379–00	PIPE, JOINT 4 TUBO DE UNION 4	1	1				
22	90119–06299	BOLT, WITH WASHER TORNILLO CON ARANDELA	3	3				
23	63P–13716–00	COLLAR COLLAR	3	3				
24	6BM–13593–00	DAMPER COJINETE DE RODILLOS	3	3				
25	63P–8259L–00	WIRE HARNESS ASSY 1 CONJUNTO DE CABLES 1	1	1				
26	63P–21841–10	COOLER ENFRIADOR	1	1				
27	63P–13573–00	BOLT 1 PERNO 1	3	3				

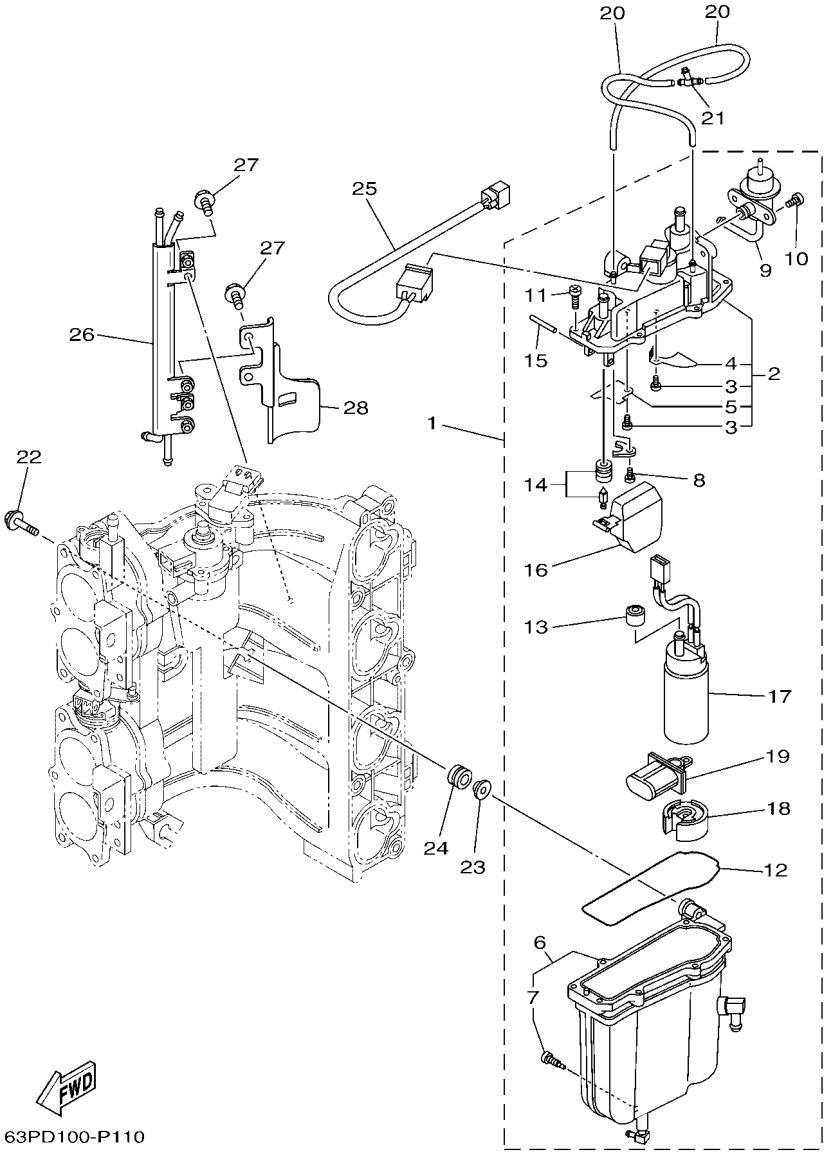

FIG. 11 FUEL INJECTION PUMP 1 — BOMBA DE INYECTOR 1

REF. NO.	PART NO. CODIGO Nº	DESCRIPTION DESCRIPCION	6BME	6BNE				REMARKS OBSERVACIONES
28	63P–13882–00	COVER 2 CUBIERTA 2	1	1				

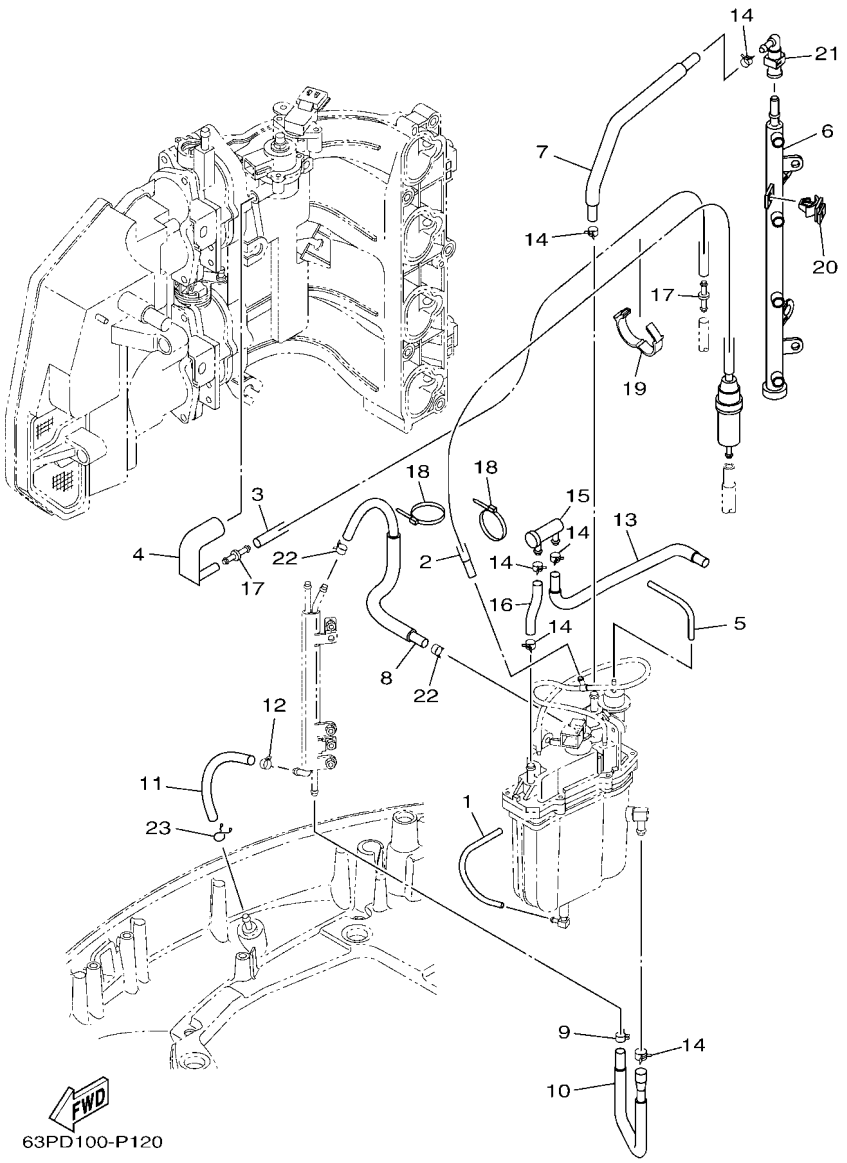

FIG. 12 FUEL INJECTION PUMP 2 — BOMBA DE INYECTOR 2

REF. NO.	PART NO. CODIGO Nº	DESCRIPTION DESCRIPCION	6BME	6BNE				REMARKS OBSERVACIONES
1	63P–14149–00	PIPE TUBO	1	1				
2	63P–13971–10	PIPE, FUEL 1 ANILLO DE ESPACIADOR	1	1				WITH FILTER WITH FILTER
3	63P–13546–00	HOSE 2 SELLO	1	1				
4	63P–13545–00	HOSE 1 SELLO	1	1				
5	63P–13532–10	HOSE, VACUUM SENSING 3 MANGUERA, DE VACIO 3	1	1				
6	63P–13160–10	DELIVERY PIPE ASSY 1 TUBO DE LLEGADA CONJUNTO 1	1	1				
7	63P–13974–40	PIPE, FUEL 4 TUBO, COMBUSTIBLE 4	1	1				
8	63P–13976–40	PIPE, FUEL 6 TUBO, COMBUSTIBLE 6	1	1				EXCEPT FOR CAR EXCEPT FOR CAR
	63P–13976–50	PIPE, FUEL 6 TUBO, COMBUSTIBLE 6	1	1				FOR CAR FOR CAR
9	68V–2411M–00	CLIP PRESILLA	1	1				
10	63P–24317–30	PIPE 7 TUBO 7	1	1				EXCEPT FOR CAR EXCEPT FOR CAR
	63P–24317–40	PIPE 7 TUBO 7	1	1				FOR CAR FOR CAR
11	63P–2247B–10	HOSE 2 TUBO 2	1	1				
12	68V–24519–00	CLIP PRESILLA	1	1				
13	63P–24325–40	PIPE 14 TUBO 14	1	1				EXCEPT FOR CAR EXCEPT FOR CAR
	63P–24325–50	PIPE 14 TUBO 14	1	1				FOR CAR FOR CAR
14	68V–13577–00	CLIP PRESILLA	6	6				
15	69J–24501–10	FILTER, FUEL FIELTRO	1	1				
16	63P–13975–40	PIPE, FUEL 5 TUBO, COMBUSTIBLE 5	1	1				EXCEPT FOR CAR EXCEPT FOR CAR
	63P–13975–50	PIPE, FUEL 5 TUBO, COMBUSTIBLE 5	1	1				FOR CAR FOR CAR
17	6P2–13758–00	PIPE, JOINT TUBO DE JUNTA	2	2				
18	68V–2481H–00	CLAMP GRAMPA	2	2				
19	90464–26001	CLAMP BRIDA	1	1				
20	90464–12002	CLAMP BRIDA	1	1				
21	6AW–24300–01	FUEL PIPE JOINT CONECTOR MANGUERA COMBUSTIBLE	1	1				
22	63P–24519–00	CLIP PRESILLA	2	2				
23	90467–09M09	CLIP PRESILLA	1	1				

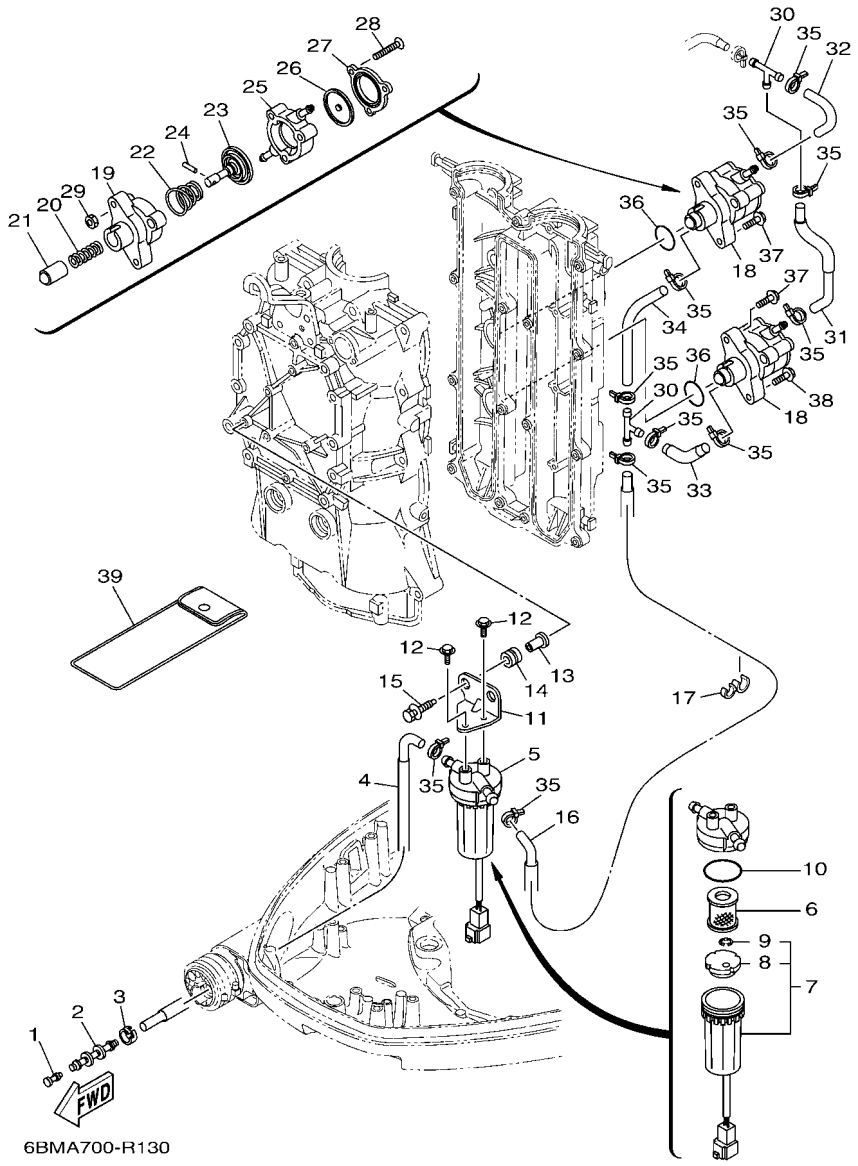

FIG. 13 FUEL 1 — COMBUSTIBLE 1

REF. NO.	PART NO. CODIGO Nº	DESCRIPTION DESCRIPCION	6BME	6BNE				REMARKS OBSERVACIONES
1	689–85547–01	DAMPER AMORTIGUADOR	1	1				
2	6AW–24377–01	PIPE, JOINT 2 TUBO DE UNION 2	1	1				
3	6E5–24351–51	BAND 1 ABRAZADERA 1	1	1				
4	63P–24316–30	PIPE 6 TUBO 6	1	1				EXCEPT FOR CAR EXCEPT FOR CAR
	63P–24316–40	PIPE 6 TUBO 6	1	1				FOR CAR FOR CAR
5	6P3–24560–04	FILTER ASSY FILTRO COMPLETO	1	1				
6	6P3–24563–02	.ELEMENT, FILTER .ELEMENTO DEL FILTRO	1	1				
7	6P3–24562–03	.CUP, FILTER .COPA DE FILTRO	1	1				
8	6P3–24469–00	..FLOAT, WATER LEVEL ..BOIA	1	1				
9	6P3–24519–00	..CLIP ..PRESILLA	1	1				
10	6P3–24564–00	.GASKET .EMPAQUE	1	1				
11	63P–24566–00	BRACKET, FILTER SOPORTE DEL FILTRO	1	1				
12	97E95–06514	BOLT, HEXAGON W/W DEEP RECESS TORNILLO HEXAGONAL CON RONDONA	2	2				
13	90387–06289	COLLAR ESPACIADOR	2	2				
14	90480–10M23	GROMMET TAPON	2	2				
15	90119–06309	BOLT, WITH WASHER TORNILLO CON ARANDELA	2	2				
16	63P–24311–30	PIPE, FUEL 1 TUBO DE COMBUSTIBLE 1	1	1				EXCEPT FOR CAR EXCEPT FOR CAR
	63P–24311–20	PIPE, FUEL 1 TUBO DE COMBUSTIBLE 1	1	1				FOR CAR FOR CAR
17	90464–13M34	CLAMP BRIDA	1	1				
18	63P–24410–20	FUEL PUMP ASSY BOMBA DE COMBUSTIBLE COMPLETA	2	2				
19	68V–24412–00	.BODY 1 .CUERPO 1	1	1				
20	68V–24454–00	.SPRING .RESORTE	1	1				
21	63P–13131–00	.PLUNGER .ESPACIADOR	1	1				
22	63P–24423–00	.SPRING, DIAPHRAGM .RESORTE DE DIAFRAGMA	1	1				
23	68V–24411–00	.DIAPHRAGM .DIAFRAGMA	1	1				
24	68V–24374–00	.PIN .PASADOR	1	1				
25	63P–24413–00	.BODY 2 .CUERPO 2	1	1				

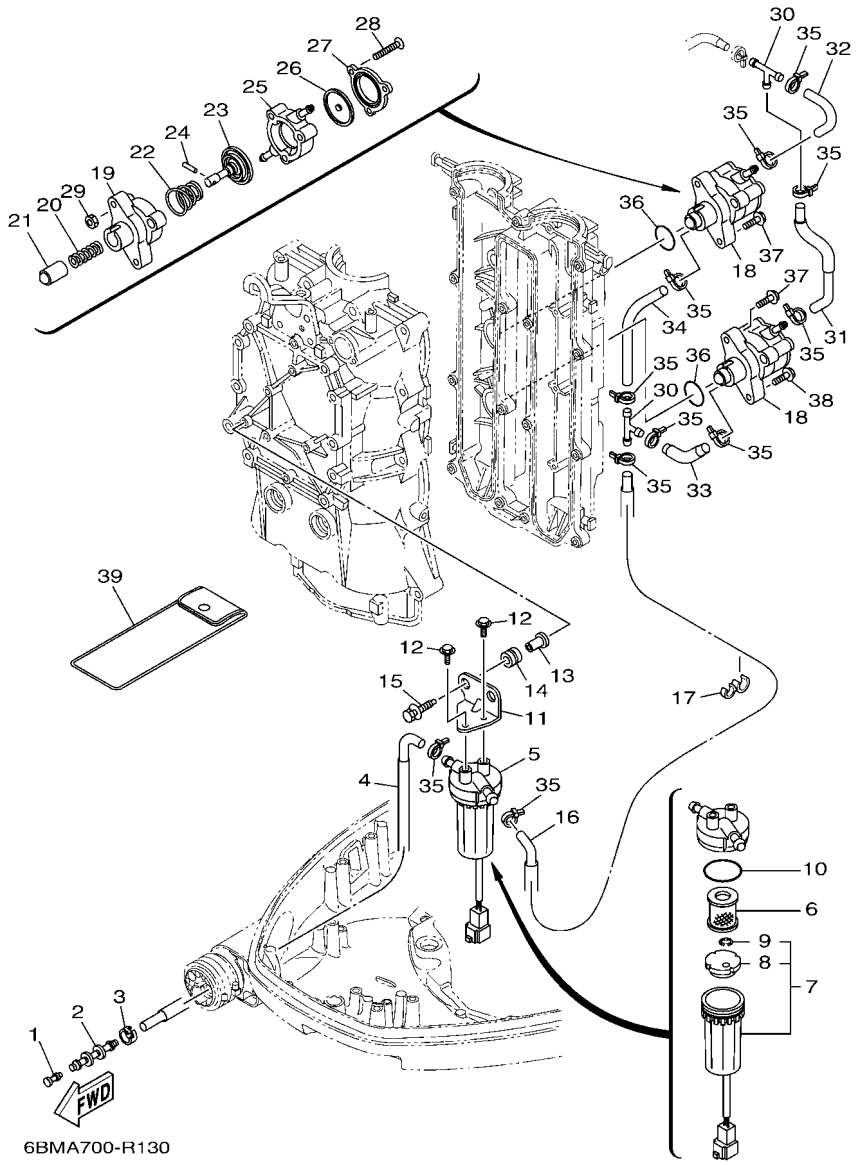

FIG. 13 FUEL 1 — COMBUSTIBLE 1

REF. NO.	PART NO. CODIGO Nº	DESCRIPTION DESCRIPCION	6BME	6BNE				REMARKS OBSERVACIONES
26	68V–24471–10	.DIAPHRAGM .DIAFRAGMA	1	1				
27	63P–24414–00	.BODY 3 .CUERPO 3	1	1				
28	68V–24444–00	.SCREW .TORNILLO	3	3				
29	68V–24149–00	.NUT .TUERCA	3	3				
30	6E5–24378–00	PIPE, JOINT 3 TUBO DE UNION 3	2	2				
31	6BM–24314–00	PIPE 4 TUBO 4	1	1				EXCEPT FOR CAR EXCEPT FOR CAR
	63P–24314–10	PIPE 4 TUBO 4	1	1				FOR CAR FOR CAR
32	63P–24315–00	PIPE 5 TUBO DE DESAGUE	1	1				EXCEPT FOR CAR EXCEPT FOR CAR
	63P–24315–10	PIPE 5 TUBO DE DESAGUE	1	1				FOR CAR FOR CAR
33	63P–24312–10	PIPE 2 TUBO 2	1	1				EXCEPT FOR CAR EXCEPT FOR CAR
	63P–24312–20	PIPE 2 TUBO 2	1	1				FOR CAR FOR CAR
34	63P–24313–10	PIPE 3 TUBO 3	1	1				EXCEPT FOR CAR EXCEPT FOR CAR
	63P–24313–20	PIPE 3 TUBO 3	1	1				FOR CAR FOR CAR
35	90465–11M10	CLAMP BRIDA	11	11				
36	93210–30682	O-RING ANILLO O	2	2				
37	90119–06312	BOLT, WITH WASHER TORNILLO CON ARANDELA	3	3				
38	90119–06135	BOLT, WITH WASHER TORNILLO CON ARANDELA	1	1				
39	67F–28100–03	TOOL KIT JUEGO DE HERRAMIENTAS	1	1				UR UR
	67F–28100–12	TOOL KIT JUEGO DE HERRAMIENTAS	1	1				UR UR

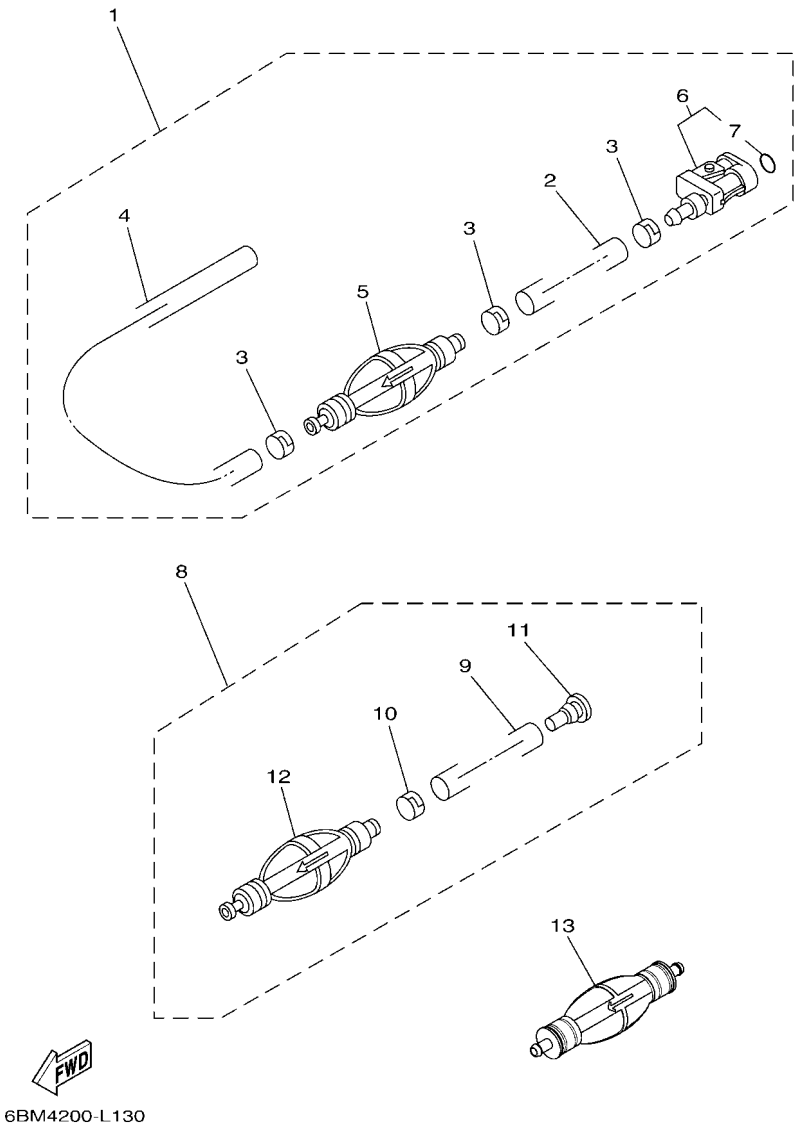

FIG. 14 FUEL 2 — COMBUSTIBLE 2

REF. NO.	PART NO. CODIGO Nº	DESCRIPTION DESCRIPCION	6BME	6BNE				REMARKS OBSERVACIONES
1	6Y2–24306–45	FUEL PIPE COMP. 1 TUBO COMBUST. COMPL 1	1					AP FOR CHN AP FOR CHN
2	90445–13M01	.HOSE (L2050) .MANGUERA (L2050)	1					
3	6E5–24351–51	.BAND 1 .ABRAZADERA 1	3					
4	90445–13M35	.HOSE (L250) .MANGUERA (L250)	1					
5	6Y2–24360–60	.PRIMER PUMP ASSY .SOPORTE BOMBA	1					
6	6Y2–24305–06	.FUEL PIPE JOINT COMP. 2 .CONECTOR MANGUERA COMBUST. 2	1					
7	93210–08287	..O-RING ..ANILLO O	1					
8	6Y2–24307–51	FUEL PIPE COMP. 2 MANGUERA COMPL,COMBUSTIBLE 2	1	1				AP EXCEPT CHN,CAR AP EXCEPT CHN,CAR
9	90445–13M01	.HOSE (L2050) .MANGUERA (L2050)	1	1				
10	6E5–24351–51	.BAND 1 .ABRAZADERA 1	1	1				
11	90480–06M19	.GROMMET .TAPON	1	1				
12	6Y2–24360–60	.PRIMER PUMP ASSY .SOPORTE BOMBA	1	1				
13	6YK–24360–73	PRIMER PUMP ASSY SOPORTE BOMBA	1	1				AP FOR CAR AP FOR CAR

FIG. 15 GENERATOR GENERADOR

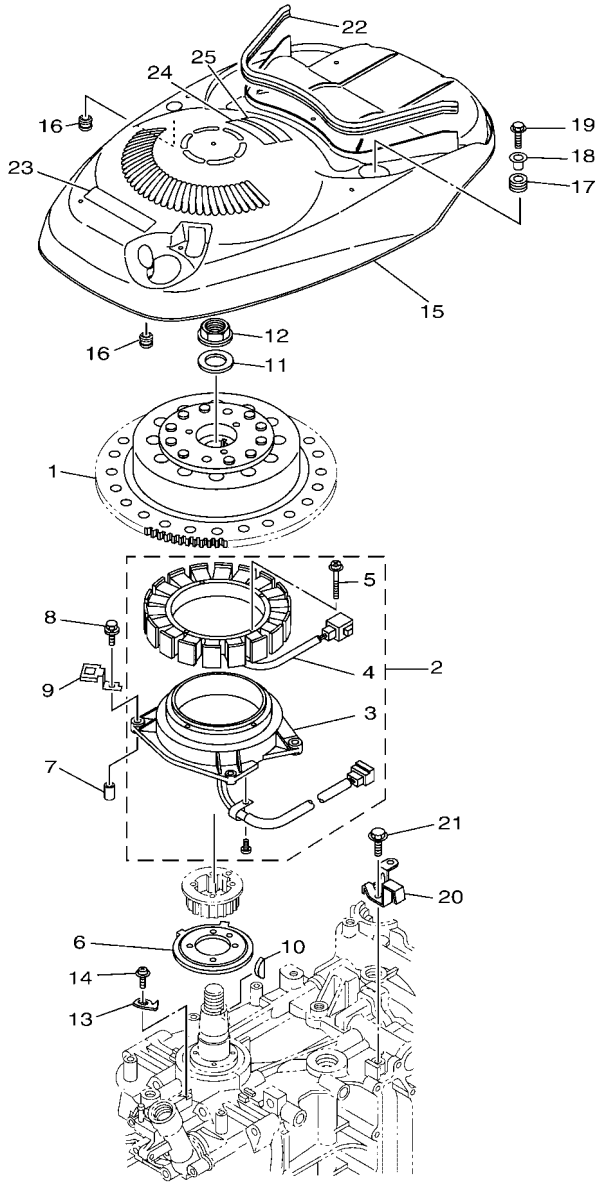

6BMD300-U150

REF. NO.	PART NO. CODIGO Nº	DESCRIPTION DESCRIPCION	6BME	6BNE				REMARKS OBSERVACIONES
1	6BM–81450–00	ROTOR ASSY ROTOR COMPLETO	1	1				
2	63P–81460–00	BASE ASSY CONJUNTO BASE	1	1				
3	63P–85580–00	.COIL, PULSER .BOBINA DE PULSACION	1	1				
4	63P–81410–00	.STATOR ASSY .ESTATOR COMPLETO	1	1				
5	63D–81345–20	.SCREW, WITH WASHER (M6X30) .TORNILLO, CON ARANDELA (M6X30)	4	4				
6	63P–81673–01	ROTOR ROTOR	1	1				
7	99530–08012	PIN, DOWEL PASADOR, DE ESPIGA	2	2				
8	97E95–06635	BOLT, HEXAGON W/W DEEP RECESS TORNILLO HEXAGONAL CON RONDONA	4	4				
9	63P–81845–00	PLATE PLACA	2	2				
10	90280–05015	KEY, WOODRUFF CUNA WOODRUFF	1	1				
11	90201–24014	WASHER, PLATE ARANDELA PLANA	1	1				
12	90179–24002	NUT TUERCA	1	1				
13	6P2–81332–00	PLATE, TIMING PLACA REGULADOR DE TIEMPO	1	1				
14	97985–06210	SCREW, WITH WASHER TORNILLO, CON ARANDELA	1	1				
15	63P–81337–10	COVER, FLYWHEEL CUBIERTA DE VOLANTE	1	1				
16	6A0–82317–01	DAMPER, IGNITION COIL AMORTIGUADOR BOBINA ENCENDIDO	2	2				
17	90480–15M31	GROMMET TAPON	1	1				
18	90387–06285	COLLAR ESPACIADOR	1	1				
19	95D95–06020	BOLT, FLANGE DEEP RECESS CERROJO, REBORDE HUECO PROFUND	1	1				
20	63P–8132G–10	PLATE PLACA	1	1				
21	97E95–06516	BOLT, HEXAGON W/W DEEP RECESS TORNILLO HEXAGONAL CON RONDONA	1	1				
22	6DA–42617–00	DAMPER, FORM HULE DE FORMA	1	1				
23	63P–13437–63	MARK, CAUTION MARKER	1	1				
24	6EE–81994–40	LABEL, SAFETY ETIQUETA DE SEGURIDAD	1	1				
25	6EE–81994–50	LABEL, SAFETY ETIQUETA DE SEGURIDAD	1	1				FOR CAR FOR CAR

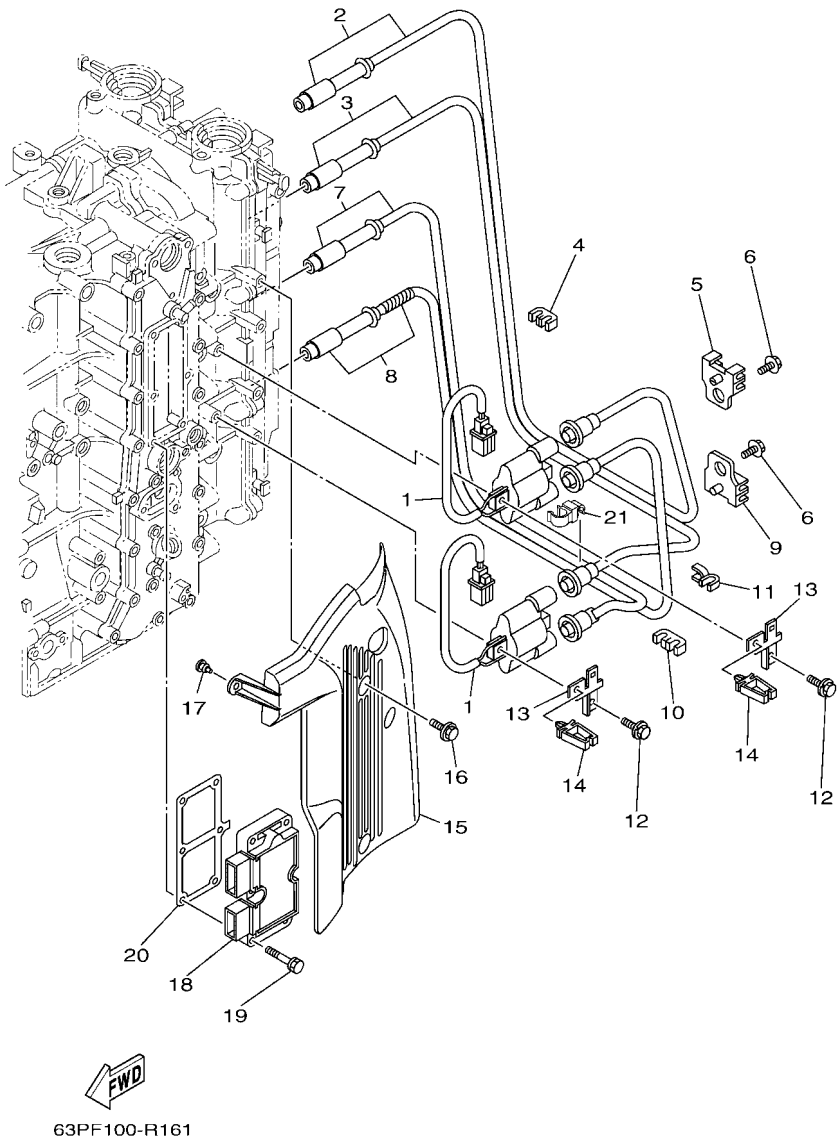

FIG. 16 ELECTRICAL 1 — EQUIPO ELECTRICO 1

REF. NO.	PART NO. CODIGO Nº	DESCRIPTION DESCRIPCION	6BME	6BNE				REMARKS OBSERVACIONES
1	63P–82310–01	IGNITION COIL ASSY BOBINA DE ENCENDIDO COMPLETA	2	2				
2	6BM–W823A–00	CORD, HIGH TENSION 1 CABLE DE ALTA TENSION 1	1	1				
3	6BM–W823B–00	CORD, HIGH TENSION 2 CABLE DE ALTA TENSION 2	1	1				
4	67F–82361–00	CLAMP, CORD GRAMPA DE CABLE	1	1				
5	67F–82362–00	CLAMP, CORD 2 GRAMPA DE CABLE 2	1	1				
6	90119–06275	BOLT, WITH WASHER TORNILLO CON ARANDELA	2	2				
7	6BM–W823C–00	CORD, HIGH TENSION 3 CABLE DE ALTA TENSION 3	1	1				
8	6BM–W823D–00	CORD, HIGH TENSION 4 CABLE DE ALTA TENSION 4	1	1				
9	67F–82362–00	CLAMP, CORD 2 GRAMPA DE CABLE 2	1	1				
10	67F–82361–00	CLAMP, CORD GRAMPA DE CABLE	1	1				
11	90464–07M41	CLAMP BRIDA	1	1				
12	97E95–06625	BOLT, HEXAGON W/W DEEP RECESS TORNILLO HEXAGONAL CON RONDONA	4	4				
13	63P–82388–00	PLATE PLACA	2	2				
14	90464–05141	CLAMP BRIDA	2	2				
15	63P–82314–00	COVER, IGNITION COIL CUBIERTA BOBINA ENCENDIDO	1	1				
16	95D95–06020	BOLT, FLANGE DEEP RECESS CERROJO, REBORDE HUECO PROFUND	2	2				
17	90480–06M19	GROMMET TAPON	1	1				
18	63P–81960–02	RECTIFIER & REGULATOR ASSY RECTIFICADOR Y REGULADOR	1	1				
19	90119–06MA4	BOLT, WITH WASHER TORNILLO CON ARANDELA	6	6				
20	63P–81975–00	PLATE, RECTIFIER FITTING PLACA ACCESORIA RECTIF.	1	1				
21	90464–12017	CLAMP BRIDA	1	1				

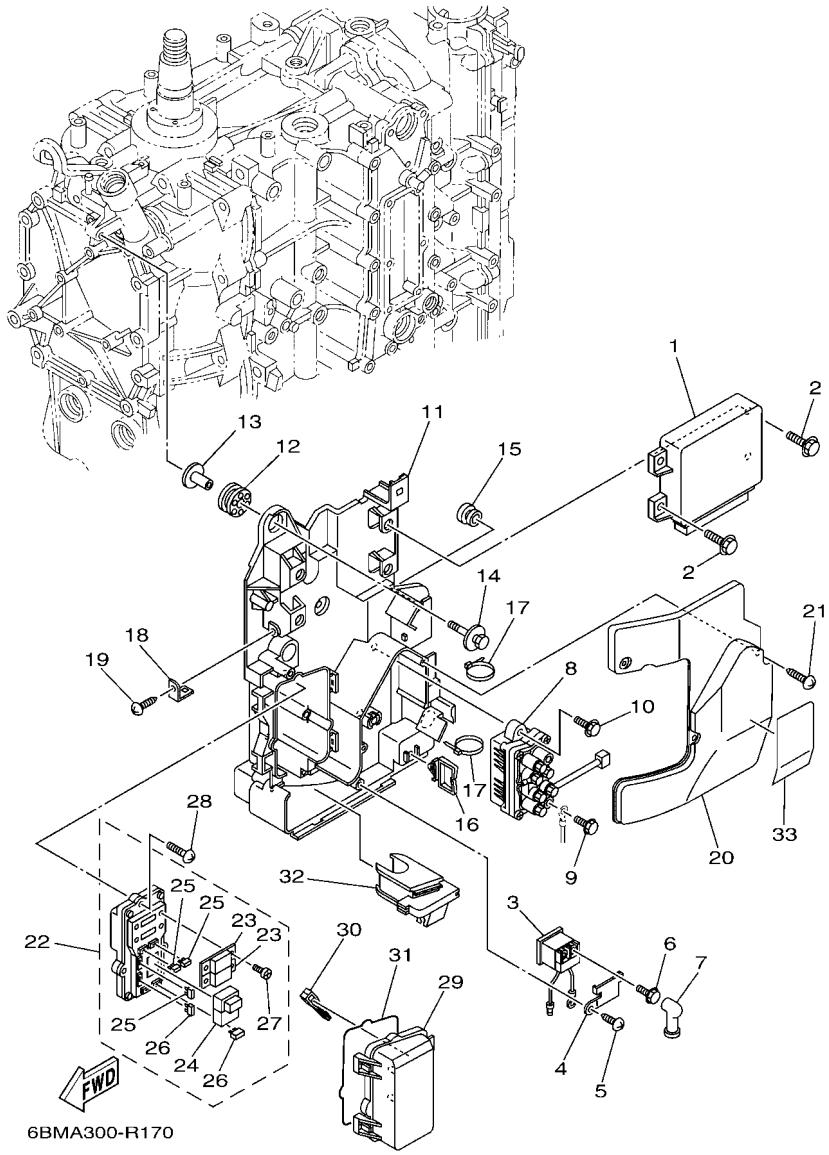

FIG. 17 ELECTRICAL 2 — EQUIPO ELECTRICO 2

REF. NO.	PART NO. CODIGO Nº	DESCRIPTION DESCRIPCION	6BME	6BNE				REMARKS OBSERVACIONES
1	6BM–8591A–05	ENGINE CONTROL UNIT ASSY UNIDAD CONTROL	1	1				
2	97E95–06516	BOLT, HEXAGON W/W DEEP RECESS TORNILLO HEXAGONAL CON RONDONA	4	4				
3	68V–8194A–00	RELAY RELE	1	1				
4	68V–81953–00	STAY, RELAY SOPORTE DE RELE	1	1				
5	97780–60620	SCREW, TAPPING TORNILLO DE CABEZA DE CONO ACH	1	1				
6	97E95–06610	BOLT, HEXAGON W/W DEEP RECESS TORNILLO HEXAGONAL CON RONDONA	2	2				
7	6G5–82119–00	COVER, LEAD WIRE CUBIERTA DE CABLE CONDUCTOR	2	2				
8	63P–81950–00	RELAY ASSY RELE COMPLETO	1	1				
9	97E95–06610	BOLT, HEXAGON W/W DEEP RECESS TORNILLO HEXAGONAL CON RONDONA	2	2				
10	97513–06520	BOLT, WITH WASHER PERNO CON ARANDELA	2	2				
11	63P–81948–01	BRACKET SOPORTE	1	1				
12	68F–85516–01	SPACER ESPACIADOR	3	3				
13	90387–06176	COLLAR ESPACIADOR	3	3				
14	68F–85119–00	BOLT PERNO	3	3				
15	90480–10627	GROMMET TAPON	1	1				
16	90464–23199	CLAMP BRIDA	1	1				
17	90465–13M18	CLAMP BRIDA	3	3				
18	68V–85548–01	HOLDER SOSTEN	1	1				
19	97780–60620	SCREW, TAPPING TORNILLO DE CABEZA DE CONO ACH	1	1				
20	63P–81942–00	COVER CUBIERTA	1	1				
21	90169–05M00	SCREW, TRUSS HEAD TAPPING TORNILLO	3	3				
22	63P–82170–02	FUSE BOX ASSY CAJA DE FUSIBLES COMPL.	1	1				
23	63P–82151–00	.FUSE (50A) .FUSIBLE (50A)	2	2				
24	6AW–8195A–00	.RELAY ASSY .RELE COMPLETO	1	1				
25	67F–82151–00	.FUSE (20A) .FUSIBLE (20A)	3	3				
26	67F–82151–10	.FUSE (30A) .FUSIBLE (30A)	2	2				
27	68F–82846–00	.SCREW, PAN HEAD (M5) .TORNILLO (M5)	4	4				

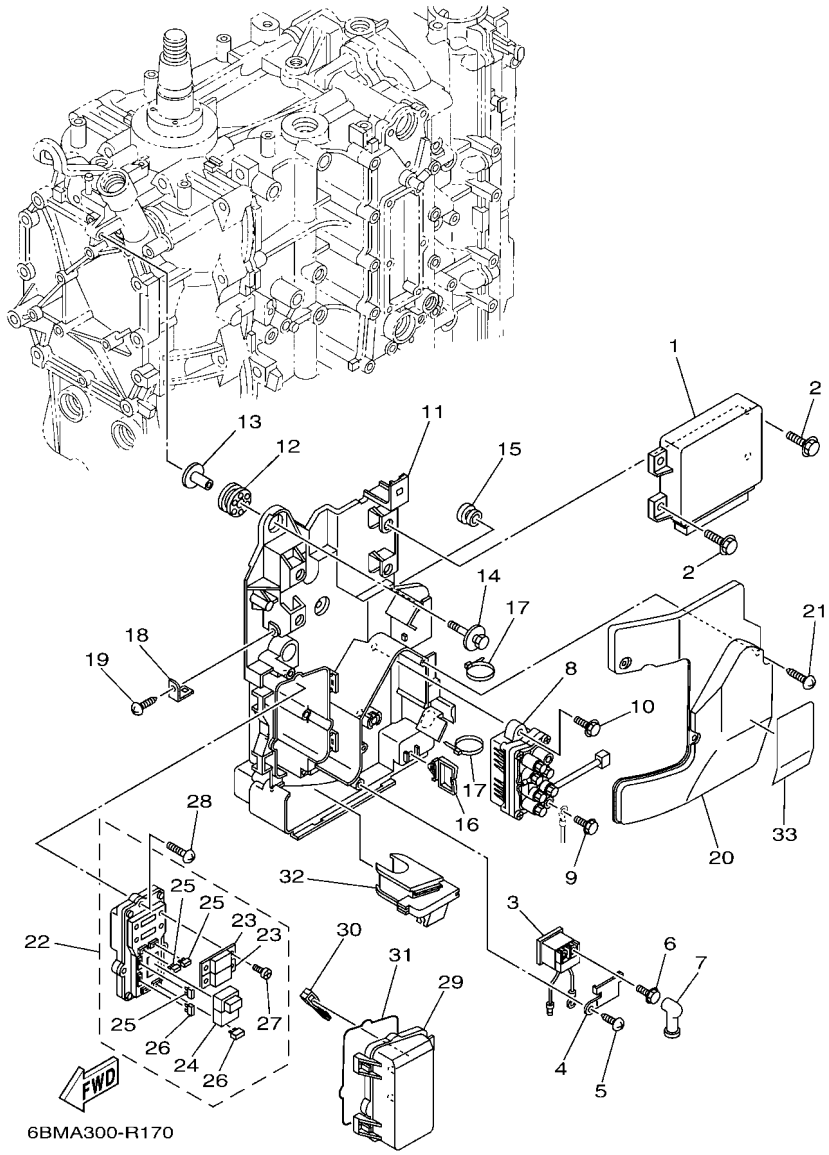

FIG. 17 ELECTRICAL 2 — EQUIPO ELECTRICO 2

REF. NO.	PART NO. CODIGO Nº	DESCRIPTION DESCRIPCION	6BME	6BNE				REMARKS OBSERVACIONES
28	97780–50620	SCREW, TAPPING TORNILLO DE CABEZA DE CONO ACH	3	3				
29	60V–85544–00	CASE CAJA	1	1				
30	67F–2812A–00	PULLER, FUSE TIRADOR DE FUSIBLE	1	1				
31	68F–82176–00	DAMPER AMORTIGUADOR	1	1				
32	63P–81336–01	GROMMET TAPON PROTECTOR	1	1				
33	63P–81919–00	GRAPHIC, REGULATOR CALCAMONIA DE REGULADOR	1	1				

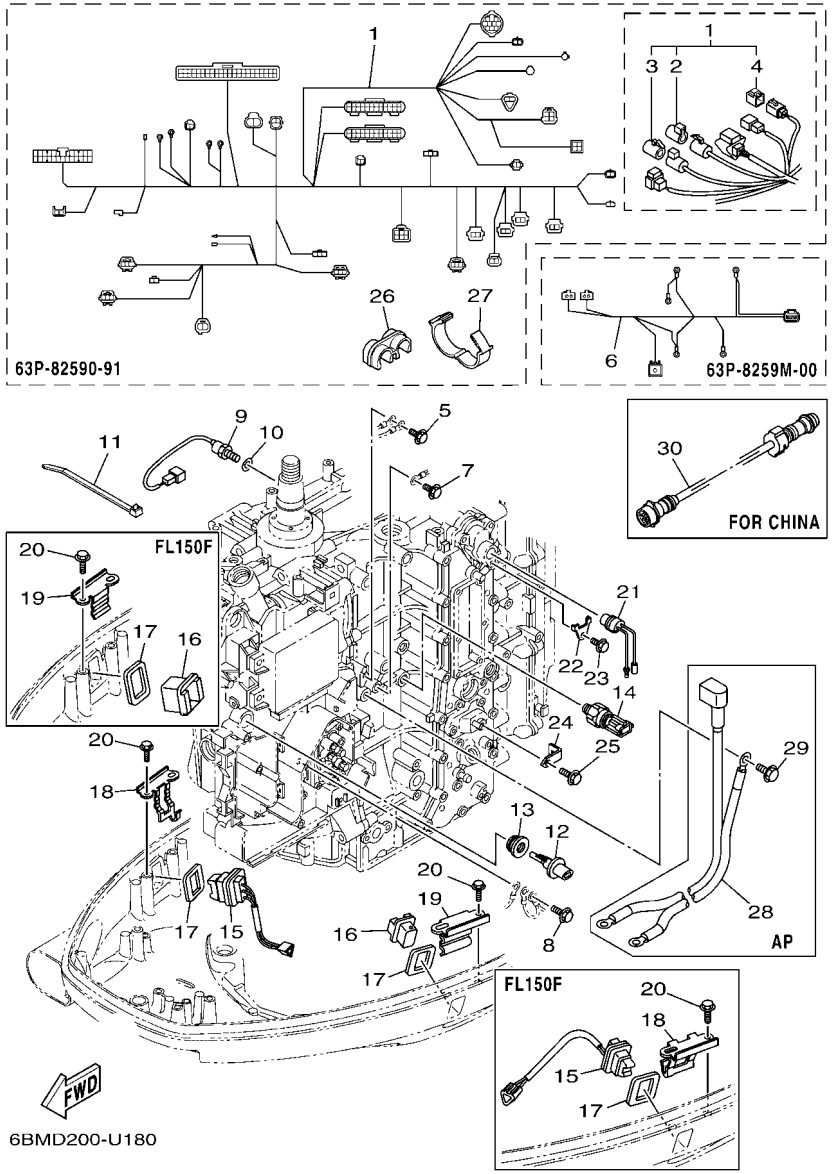

FIG. 18 ELECTRICAL 3 — EQUIPO ELECTRICO 3

REF. NO.	PART NO. CODIGO Nº	DESCRIPTION DESCRIPCION	6BME	6BNE				REMARKS OBSERVACIONES
1	63P–82590–91	WIRE HARNESS ASSY CONJUNTO DE CABLES	1	1				
2	6DA–82582–00	.CAP 1 (FEMALE) .TAPA 1	1	1				
3	6DA–82582–10	.CAP 1 (MALE) .TAPA 1	1	1				
4	6Y8–82582–11	.CAP 1 (4PIN) .TAPA 1 (4P)	1	1				
5	97E95–06516	BOLT, HEXAGON W/W DEEP RECESS TORNILLO HEXAGONAL CON RONDONA	1	1				
6	63P–8259M–00	WIRE HARNESS ASSY 2 ARNES DE CABLES	1	1				
7	97E95–06516	BOLT, HEXAGON W/W DEEP RECESS TORNILLO HEXAGONAL CON RONDONA	1	1				
8	97E95–06512	BOLT, HEXAGON W/W DEEP RECESS TORNILLO HEXAGONAL CON RONDONA	1	1				
9	61A–85790–00	THERMOSENSOR ASSY TERMICA SENSORIO	1	1				
10	92990–10600	WASHER, PLATE ARANDELA PLANA	1	1				
11	90465–11M10	CLAMP BRIDA	1	1				
12	63P–85886–00	SENSOR, AIR TEMPERATURE SENSOR	1	1				
13	63P–14435–00	GROMMET ANILLO PROTECTOR	1	1				
14	6AW–83651–00	SENDER, OIL PRESSURE TRASMISOR DE PRESION DE ACEITE	1	1				
15	69J–82563–01	TRIM & TILT SWITCH ASSY INTERRUPTOR DE INCLINACION	1	1				
16	69J–42723–01	COVER, BOTTOM CUBIERTA INFERIOR	1	1				
17	69J–82587–01	GASKET EMPAQUETADURA	2	2				
18	63P–83614–01	BRACKET SOPORTE	1	1				
19	6DA–83614–00	BRACKET SOPORTE	1	1				
20	90109–06316	BOLT PERNO	4	4				
21	6P2–82560–01	THERMO SWITCH ASSY INTER. DE TERMO	1	1				
22	6E9–82588–00	PLATE PLACA	1	1				
23	90109–06M80	BOLT PERNO	1	1				
24	63P–8366P–01	BRACKET 4 SOPORTE 4	1	1				
25	97E95–06512	BOLT, HEXAGON W/W DEEP RECESS TORNILLO HEXAGONAL CON RONDONA	1	1				
26	90464–12224	CLAMP BRIDA	1	1				
27	90464–26001	CLAMP BRIDA	1	1				

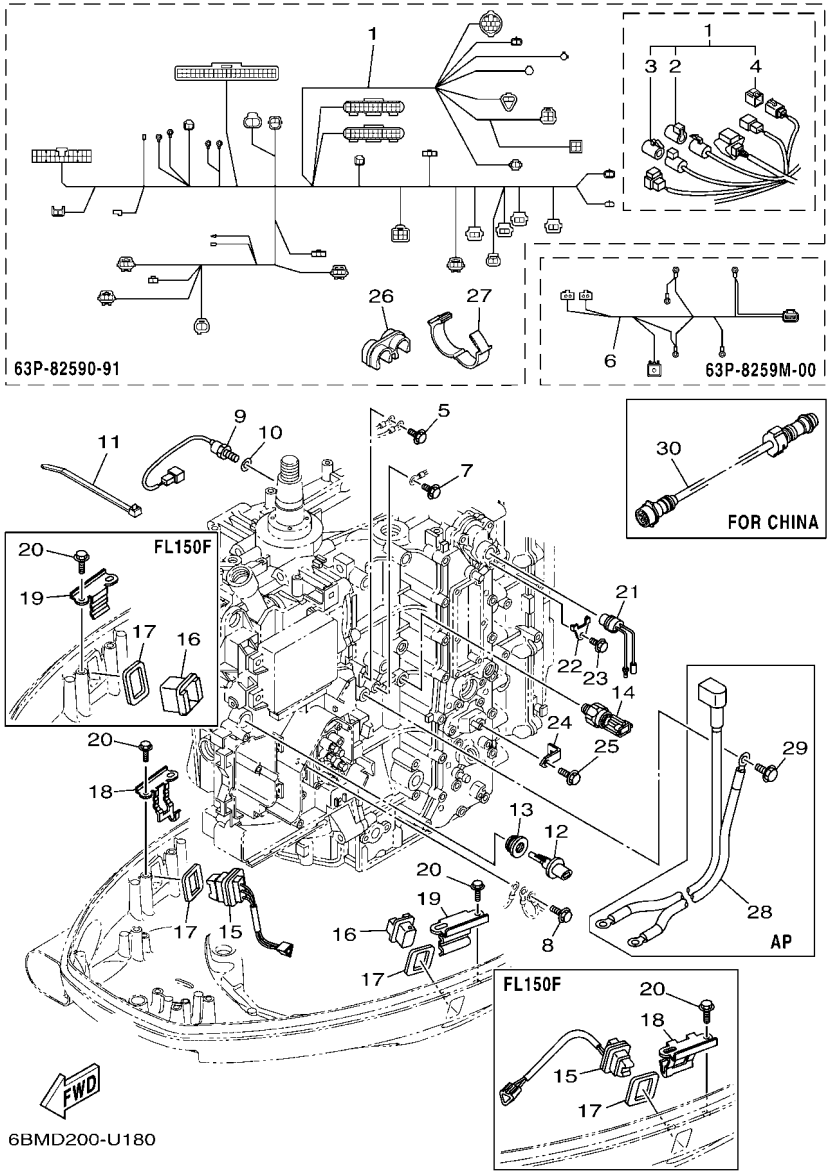

FIG. 18 ELECTRICAL 3 — EQUIPO ELECTRICO 3

REF. NO.	PART NO. CODIGO Nº	DESCRIPTION DESCRIPCION	6BME	6BNE				REMARKS OBSERVACIONES
28	6DA–82105–02	BATTERY CABLE CABLE DE BATERIA	1	1				AP AP
29	97E95–08516	BOLT, HEXAGON W/W DEEP RECESS TORNILLO HEXAGONAL CON RONDONA	1	1				AP AP
30	688–8258A–30	EXTENSION, WIRE HARNESS (3M) EXTENSION, ARNES DE CABLES (3M	1					AP FOR CHN (10P) AP FOR CHN (10P)

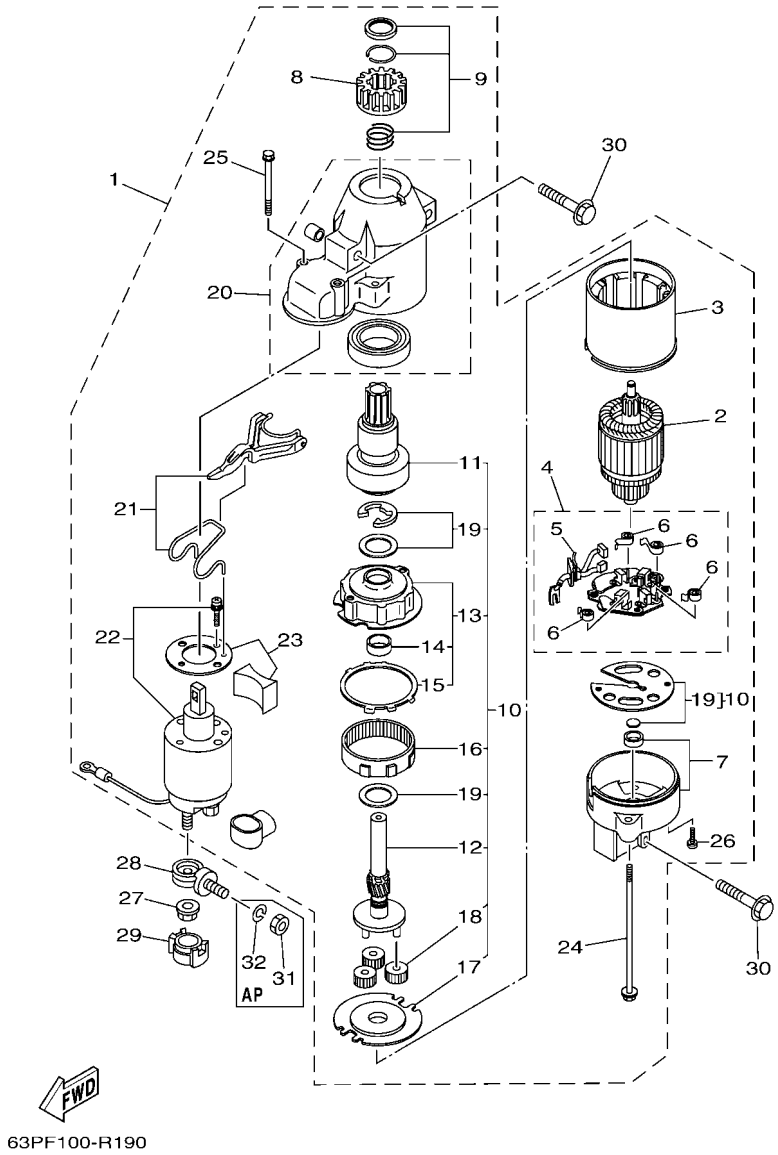

FIG. 19 STARTING MOTOR — MOTOR DE ARRANQUE

REF. NO.	PART NO. CODIGO Nº	DESCRIPTION DESCRIPCION	6BME	6BNE				REMARKS OBSERVACIONES
1	6BR–81800–02	STARTING MOTOR ASSY MOTOR DE ARRANQUE COMPLETO	1	1				
2	67F–81850–00	.ARMATURE ASSY .INDUCIDO COMPLETO	1	1				
3	67F–81810–00	.STATOR ASSY .ESTATOR COMPLETO	1	1				
4	69J–81840–11	.BRUSH HOLDER ASSY .SOSTEN DE ESCOBILLA COMPLETO	1	1				
5	69J–81801–11	..BRUSH SET ..JUEGO DE ESCOBILLA	1	1				
6	67F–81813–00	..SPRING, BRUSH ..RESORTE DE ESCOBILLA	4	4				
7	67F–81820–00	.REAR BRACKET ASSY .CUBIERTA TRASERA COMPL	1	1				
8	67F–81808–00	.PINION ASSY .PINON	1	1				
9	67F–81857–00	.PINION STOPPER SET .JUEGO TAPON PINON	1	1				
10	67F–81807–00	.GEAR ASSY, STARTING MOTOR .PINON CONJUNTO	1	1				
11	67F–81832–00	..CLUTCH, OVER RUN ..PINON COMPL	1	1				
12	67F–81836–00	..SHAFT, PINION ..ARBOL, PINON	1	1				
13	67F–81821–00	..BRACKET, CENTER 1 ..SOPORTE, CENTRO 1	1	1				
14	67F–81841–00	...BEARING ...PORTADOR	1	1				
15	67F–8183R–00	...GASKET ...EMPAQUETADURA	1	1				
16	67F–81891–00	..GEAR, RING ..ENGRANAJE ANILLO	1	1				WITH 67F-8183R-00 WITH 67F-8183R-00
17	67F–81830–00	..BRACKET, CENTER 2 ..SOPORTE, CENTRO 2	1	1				
18	60V–8183T–00	..GEAR, IDLER ..ENGRENAJE NEUTRO	3	3				
19	67F–81809–00	..WASHER KIT ..JUEGO DE ARANDELA	1	1				
20	69J–81842–00	.COVER .TAPA	1	1				
21	6C5–81839–00	.LEVER ASSY .PALANCA COMPL.	1	1				
22	63P–81941–00	.STARTER RELAY ASSY .RELE DE ARRANQUE	1	1				
23	6C5–81869–00	.COVER, DUST .CUBIERTA PARA POLVO	1	1				
24	6K7–81826–11	.BOLT .PERNO	2	2				
25	69J–81828–00	.BOLT 2 .TORNILLO DE EMPUJE 2	2	2				
26	67F–81846–00	.SCREW .TORNILLO	2	2				
27	90179–08003	NUT TUERCA	1	1				

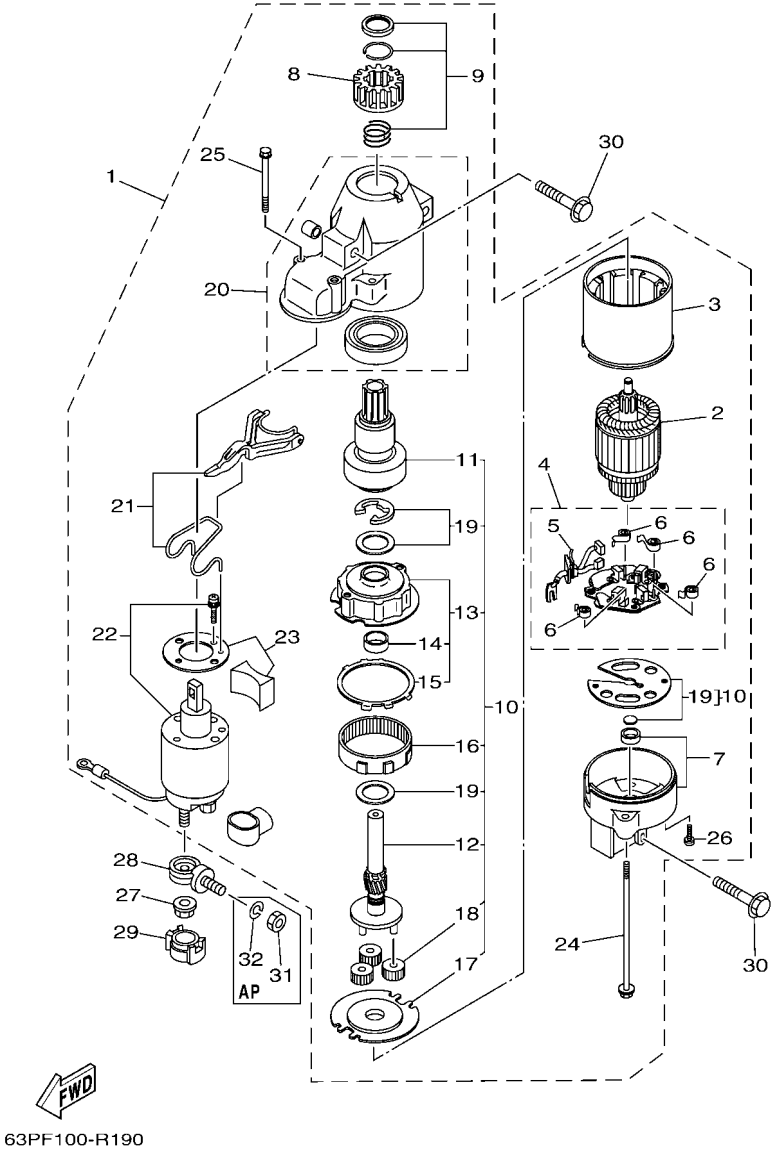

FIG. 19 STARTING MOTOR — MOTOR DE ARRANQUE

REF. NO.	PART NO. CODIGO Nº	DESCRIPTION DESCRIPCION	6BME	6BNE				REMARKS OBSERVACIONES
28	60V–81925–00	TERMINAL TERMINAL	1	1				
29	68F–82582–00	CAP,1 TAPA 1	1	1				
30	97513–08545	BOLT, WITH WASHER PERNO CON ARANDELA	3	3				
31	95333–08600	NUT TUERCA	1	1				AP AP
32	92903–08100	WASHER, SPRING RONDANA SENCILLA	1	1				AP AP

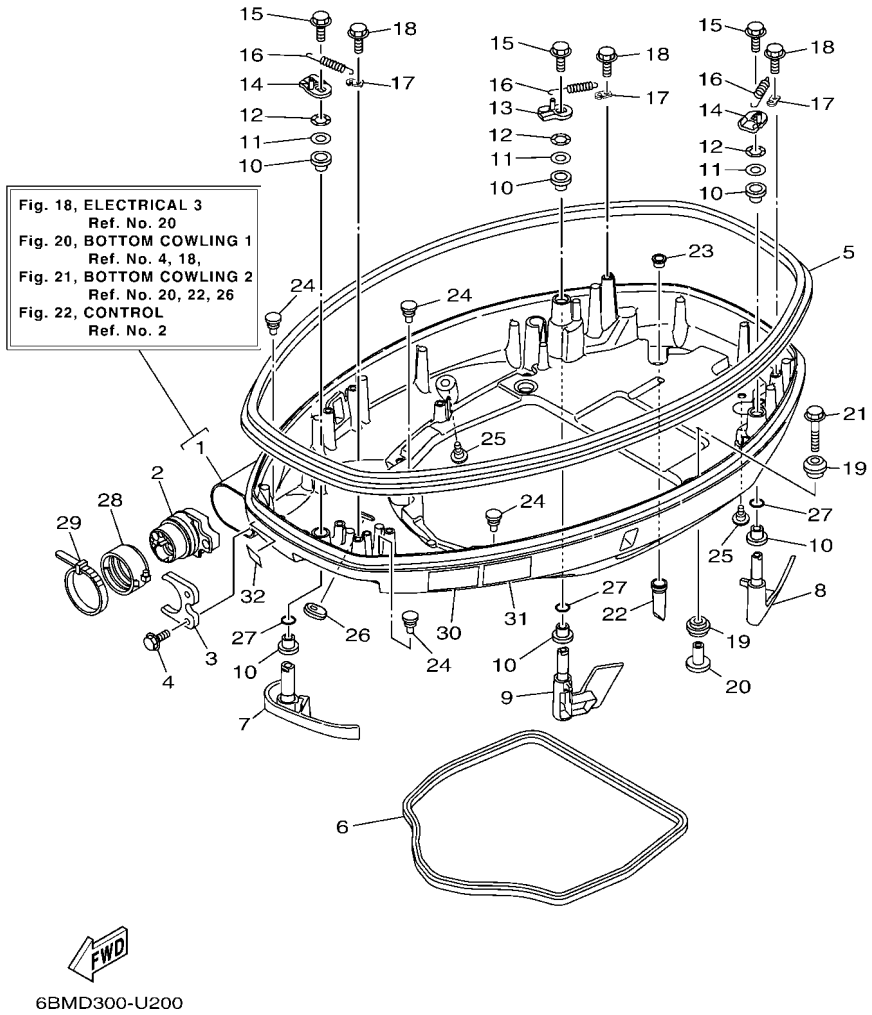

FIG. 20 BOTTOM COWLING 1 — CUBIERTA INFERIOR 1

REF. NO.	PART NO. CODIGO Nº	DESCRIPTION DESCRIPCION	6BME	6BNE				REMARKS OBSERVACIONES
1	63P–42710–11–8D	BOTTOM COWLING ASSY CUBIERTA INFERIOR COMPL.	1	1				
2	6DA–42725–02	GROMMET TAPON	1	1				
3	6CB–42761–00	STOPPER RETEN 1	1	1				
4	90109–06316	BOLT PERNO	2	2				
5	63P–42615–10	SEAL SELLO	1	1				
6	63P–42716–01	RUBBER SEAL 1 SELLO DE GOMA 1	1	1				
7	63P–42815–11–8D	LEVER, CLAMP 1 PALANCA ABRAZADERA 1	1	1				
8	6DA–42816–02–8D	LEVER, CLAMP 2 PALANCA ABRAZADERA 2	1	1				
9	6DA–42817–02–8D	LEVER, CLAMP 3 PALANCA ABRAZADERA 3	1	1				
10	90386–15M73	BUSH BUJE	6	6				
11	90201–156J2	WASHER, PLATE ARANDELA PLANA	3	3				
12	90206–15M18	WASHER, WAVE ARANDELA ONDULADA	3	3				
13	6CB–42818–00	LEVER, CLAMP 4 PALANCA, ABRAZADERA 4	1	1				
14	6CB–42819–00	LEVER, CLAMP 5 PALANCA ABRAZADERA 5	2	2				
15	95D95–08012	BOLT, FLANGE DEEP RECESS CERROJO, REBORDE HUECO PROFUND	3	3				
16	90506–22001	SPRING, TENSION RESORTE DE TENSION	3	3				
17	66T–43144–00	HOOK, SPRING GANCHO	3	3				
18	90109–06316	BOLT PERNO	3	3				
19	90480–22M81	GROMMET TAPON	8	8				
20	90387–08M37	COLLAR ESPACIADOR	4	4				
21	90119–08187	BOLT, WITH WASHER TORNILLO CON ARANDELA	4	4				
22	6DA–42717–01	RUBBER, SEAL 2 GOMA	4	4				
23	6DA–42384–00	SEAL, CAP SELLO DE TAPA	4	4				
24	6H4–42748–01	GROMMET TAPON	4	4				
25	6P2–44391–00	NIPPLE, HOSE NIPLE MANGUERA	2	2				
26	61A–42727–01	GROMMET TAPON	1	1				
27	93210–13M63	O-RING ANILLO O	3	3				

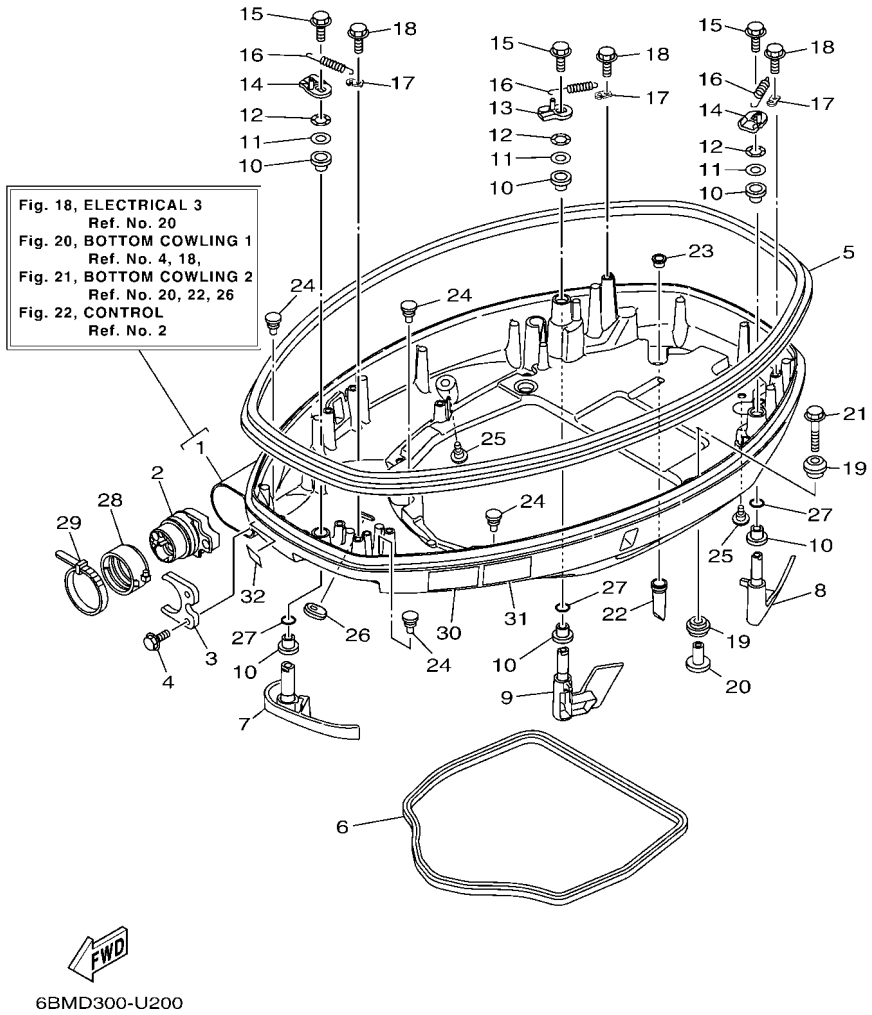

FIG. 20 BOTTOM COWLING 1 — CUBIERTA INFERIOR 1

REF. NO.	PART NO. CODIGO Nº	DESCRIPTION DESCRIPCION	6BME	6BNE				REMARKS OBSERVACIONES
28	68F–42753–00	FASTNER TIRADOR	1	1				AP AP
29	90464–20258	CLAMP BRIDA	1	1				AP AP
30	6EE–42794–40	LABEL, WARNING (GENERAL) ETIQUETA DE PRECAUCION	1	1				
31	6EE–42794–50	LABEL, WARNING (GENERAL) ETIQUETA DE PRECAUCION	1	1				FOR CAR FOR CAR
32	6AH–81996–00	MARK MARCA	1	1				FOR CAR FOR CAR

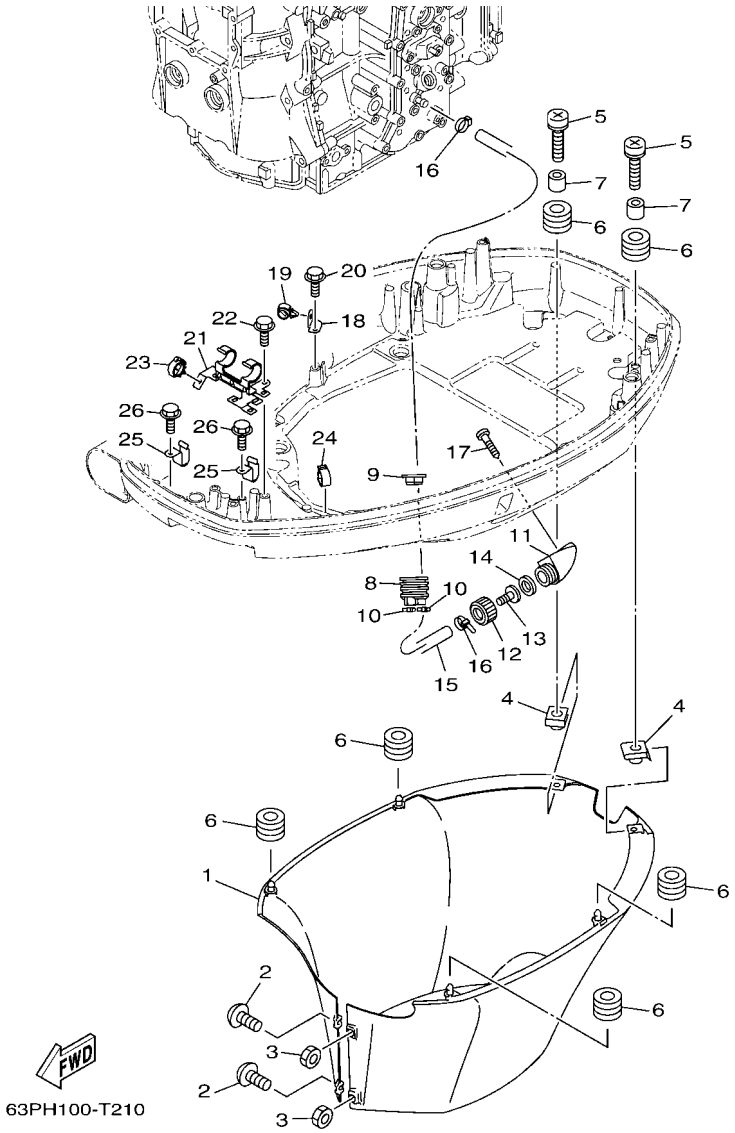

FIG. 21 BOTTOM COWLING 2 — CUBIERTA INFERIOR 2

REF. NO.	PART NO. CODIGO Nº	DESCRIPTION DESCRIPCION	6BME	6BNE				REMARKS OBSERVACIONES
1	6DA–42741–11–8D	APRON MANDIL	1	1				
2	90159–06M28	SCREW, WITH WASHER TORNILLO CON VALONA	2	2				
3	95380–06600	NUT, HEXAGON TUERCA	2	2				
4	90183–061A8	NUT, SPRING TUERCA DE RESORTE	2	2				
5	90159–06053	SCREW, WITH WASHER TORNILLO CON VALONA	2	2				
6	90480–13M24	GROMMET TAPON	6	6				
7	90387–06M43	COLLAR ESPACIADOR	2	2				
8	6H1–42726–22	GROMMET TAPON	1	1				
9	6BG–42384–00	SEAL, CAP SELLO DE TAPA	1	1				
10	90465–11M10	CLAMP BRIDA	2	2				
11	6AW–12572–00	ADAPTER ADAPTADOR	1	1				
12	6R3–12581–00	JOINT, HOSE 1 CONEXION	1	1				
13	6R3–12582–00	JOINT, HOSE 2 CONEXION	1	1				
14	6R3–12583–00	GASKET, HOSE JOINT EMPAQUETADURA JUNTA DE MANGUE	1	1				
15	63P–42541–10	PIPE 1 TUBO 1	1	1				
16	90465–11M10	CLAMP BRIDA	2	2				
17	97780–60520	SCREW, TAPPING TORNILLO DE CABEZA DE CONO ACH	2	2				
18	63P–42756–00	STAY, CLAMP SOPORTE DE GRAMPA	1	1				
19	90464–13249	CLAMP BRIDA	1	1				
20	90109–06316	BOLT PERNO	1	1				
21	63P–8366G–00	BRACKET 3 SOPORTE 3	1	1				
22	90109–06316	BOLT PERNO	2	2				
23	90464–18246	CLAMP BRIDA	2	2				
24	90464–18004	CLAMP BRIDA	1	1				
25	90462–12013	CLAMP BRIDA	2	2				
26	90109–06316	BOLT PERNO	2	2				

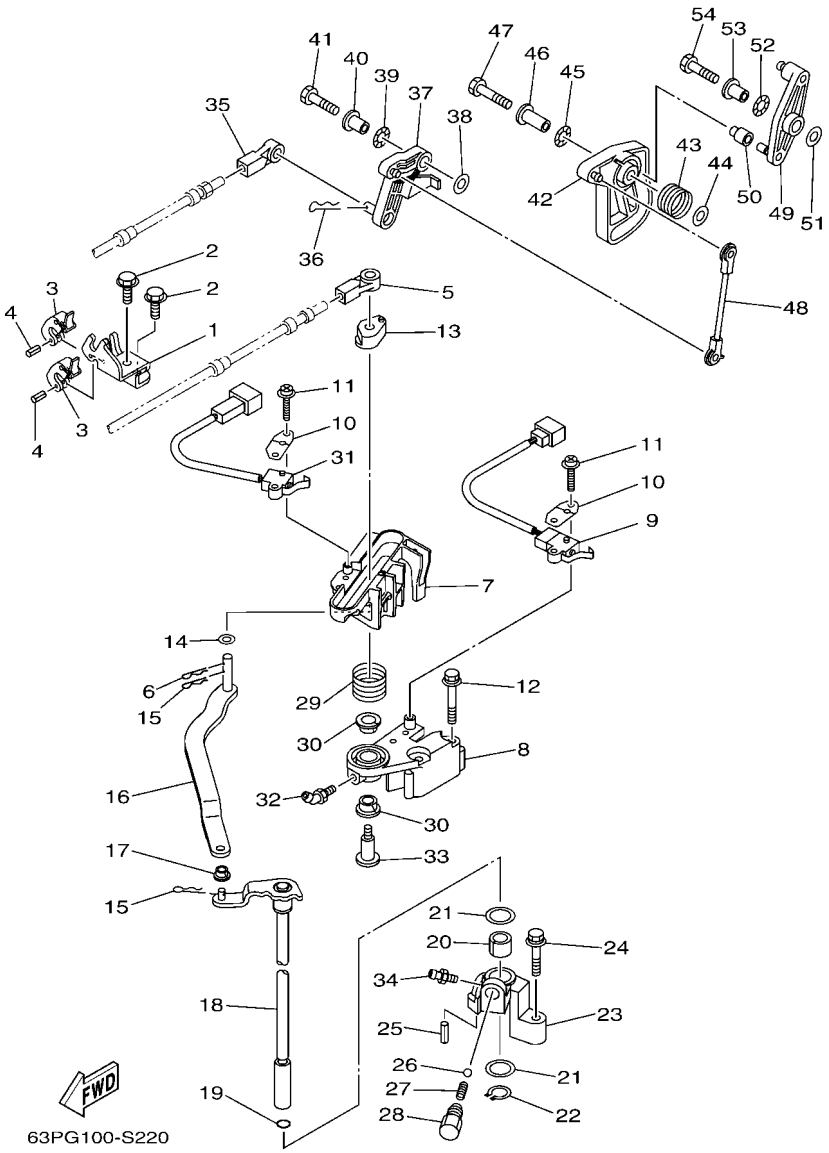

FIG. 22 CONTROL

CONTROL

REF. NO.	PART NO. CODIGO Nº	DESCRIPTION DESCRIPCION	6BME	6BNE				REMARKS OBSERVACIONES
1	63P–48531–10	BRACKET, REMOTE CONTROL 1 SOPORTE DE CONTROL REMOTO	1	1				
2	90109–06316	BOLT PERNO	2	2				
3	6E5–48538–00	CLAMP, CABLE GRAMPA DE CABLE	2	2				
4	91690–30010	PIN, SPRING PASADOR DE RESORTE	2	2				
5	6E5–48344–00	CABLE END, REMOTE CONTROL BASE CONTROL	1	1				
6	90468–18008	CLIP PRESILLA	1	1				
7	6DA–44176–00	BRACKET SOPORTE	1	1				
8	63P–44117–01	BRACKET SOPORTE	1	1				
9	69J–8259F–00	SWITCH ASSY INTERRUPTOR	1	1				
10	61A–82588–01	PLATE PLACA	2	2				
11	97985–04116	SCREW, WITH WASHER TORNILLO, CON ARANDELA	4	4				
12	97E95–06550	BOLT, HEXAGON W/W DEEP RECESS TORNILLO HEXAGONAL CON RONDONA	2	2				
13	63P–44122–00	BUSHING, SHIFT ROD LEVER BUJE PALANCA VARILLA DE CAMBIO	1	1				
14	90202–08M20	WASHER, PLATE ARANDELA DE PLANA	1	1				
15	90468–18008	CLIP PRESILLA	2	2				
16	6DA–44121–00	LEVER, SHIFT ROD PALANCA VARILLA CAMBIOS	1	1				
17	90386–06M12	BUSH BUJE	1	1				
18	6DA–44120–12	HANDLE GEAR SHIFT ASSY MANIJA DE CAMBIO COMPL	1	1				
19	93210–09165	O-RING ANILLO O	1	1				
20	90386–16M66	BUSH BUJE	1	1				
21	90202–16061	WASHER, PLATE ARANDELA DE PLANA	2	2				
22	93410–16006	CIRCLIP SEGURO	1	1				
23	63P–44118–00	BRACKET SOPORTE	1	1				
24	97E75–06535	BOLT, HEXAGON W/W DEEP RECESS TORNILLO HEXAGONAL CON RONDONA	1	1				
25	91690–30010	PIN, SPRING PASADOR DE RESORTE	1	1				
26	93501–04M02	BALL BOLA	1	1				
27	90501–12082	SPRING, COMPRESSION RESORTE DE COMPRESION	1	1				

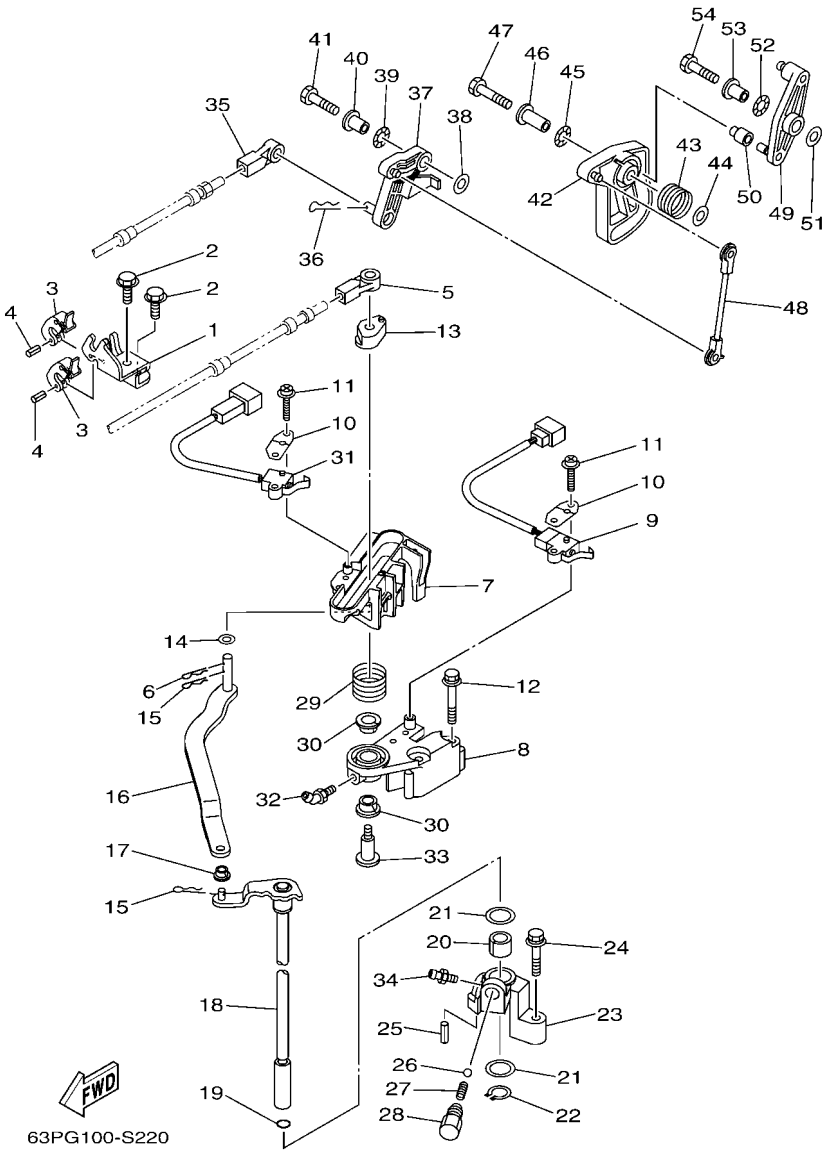

FIG. 22 CONTROL

CONTROL

REF. NO.	PART NO. CODIGO Nº	DESCRIPTION DESCRIPCION	6BME	6BNE				REMARKS OBSERVACIONES
28	648–42715–00	BUSHING 2 BUJE 2	1	1				
29	90508–20M31	SPRING, TORSION RESORTE DE TORSION	1	1				
30	90386–12069	BUSH BUJE	2	2				
31	60V–8259F–00	SWITCH ASSY INTERRUPTOR	1	1				
32	93700–06M01	NIPPLE, GREASE BOQUILLA DE ENGRASAR	1	1				
33	90109–08019	BOLT PERNO	1	1				
34	93700–06M03	NIPPLE, GREASE BOQUILLA DE ENGRASAR	1	1				
35	6E5–48344–00	CABLE END, REMOTE CONTROL BASE CONTROL	1	1				
36	90468–18008	CLIP PRESILLA	1	1				
37	63P–42154–10	LEVER, THROTTLE CONTROL PALANCA CONTROL ACELERADOR	1	1				
38	90201–06M31	WASHER, PLATE ARANDELA PLANA	1	1				
39	90206–10M04	WASHER, WAVE ARANDELA ONDULADA	1	1				
40	90387–06M29	COLLAR ESPACIADOR	1	1				
41	97D95–06025	BOLT, HEXAGON DEEP RECESS TORNILLO HEXAGONAL	1	1				
42	63P–41213–00	CAM, ACCEL. LEVA ACELERADOR	1	1				
43	69J–44135–00	SPRING RESORTE	1	1				
44	90201–06M31	WASHER, PLATE ARANDELA PLANA	1	1				
45	90206–10M04	WASHER, WAVE ARANDELA ONDULADA	1	1				
46	90387–06M82	COLLAR ESPACIADOR	1	1				
47	97D95–06035	BOLT, HEXAGON DEEP RECESS TORNILLO HEXAGONAL	1	1				
48	63P–41237–00	JOINT, LINK CONECTOR	1	1				
49	63P–42157–00	LEVER, THROTTLE PALANCA DE ACELERADOR	1	1				
50	68V–42171–00	BUSHING BUJE	1	1				
51	90201–06M31	WASHER, PLATE ARANDELA PLANA	1	1				
52	90206–10M04	WASHER, WAVE ARANDELA ONDULADA	1	1				
53	90387–06M29	COLLAR ESPACIADOR	1	1				
54	97D95–06025	BOLT, HEXAGON DEEP RECESS TORNILLO HEXAGONAL	1	1				

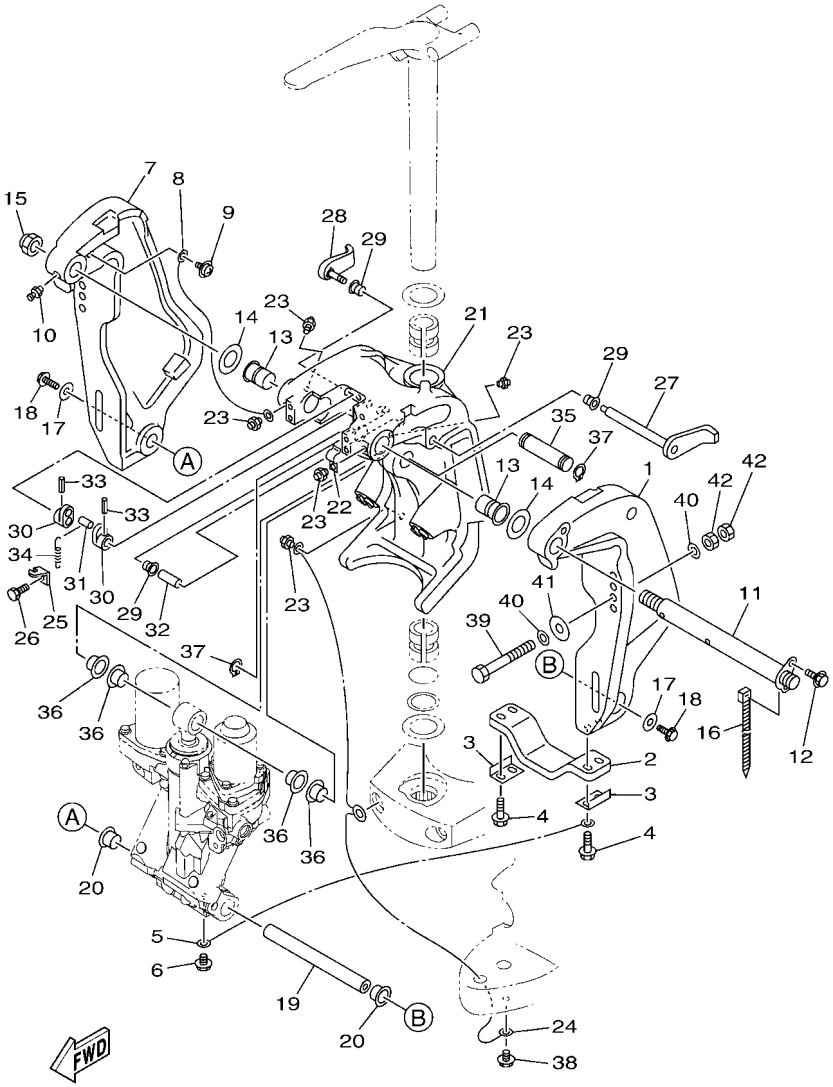

63PG200-S230

FIG. 23 BRACKET 1 — SOPORTE 1

REF. NO.	PART NO. CODIGO Nº	DESCRIPTION DESCRIPCION	6BME	6BNE				REMARKS OBSERVACIONES
1	64E–43111–02–8D	BRACKET, CLAMP 1 SOPORTE DE LA ABRAZADERA 1	1	1				
2	6G5–45251–02	ANODE CATODE	1	1				
3	6G5–44526–00	PLATE PLACA 1	2	2				
4	97E95–06530	BOLT, HEXAGON W/W DEEP RECESS TORNILLO HEXAGONAL CON RONDONA	4	4				
5	6E5–82148–00	WIRE, LEAD 4 CABLE CONDUCTOR 4	1	1				
6	97E95–06510	BOLT, HEXAGON W/W DEEP RECESS TORNILLO HEXAGONAL CON RONDONA	1	1				
7	64E–43112–02–8D	BRACKET, CLAMP 2 SOPORTE DE LA ABRAZADERA 2	1	1				
8	6E5–82148–00	WIRE, LEAD 4 CABLE CONDUCTOR 4	1	1				
9	97985–06212	SCREW, WITH WASHER TORNILLO, CON ARANDELA	1	1				
10	93700–06002	NIPPLE, GREASE BOQUILLA DE ENGRASAR	1	1				
11	64E–43131–01	BOLT, CLAMP BRACKET TORNILLO DE ABRAZADERA DEL SOP	1	1				
12	97E95–08520	BOLT, HEXAGON W/W DEEP RECESS TORNILLO HEXAGONAL CON RONDONA	1	1				
13	90386–25M31	BUSH BUJE	2	2				
14	90201–26M59	WASHER, PLATE ARANDELA PLANA	2	2				
15	90185–22M11	NUT, SELF-LOCKING TUERCA AUTOBLOCANTE	1	1				
16	90465–11M10	CLAMP BRIDA	1	1				
17	90201–10060	WASHER, PLATE ARANDELA PLANA	2	2				
18	90119–10054	BOLT, WITH WASHER TORNILLO CON ARANDELA	2	2				
19	6BC–43818–00	PIN, LOWER SHOCK MOUNT PASADOR AMORTIGUADOR INFERIOR	1	1				
20	90386–22M98	BUSH BUJE	2	2				
21	64E–43311–10–8D	BRACKET, SWIVEL 1 SOPORTE GIRATORIO 1	1	1				
22	90465–08M63	CLAMP BRIDA	1	1				
23	93700–06002	NIPPLE, GREASE BOQUILLA DE ENGRASAR	5	5				
24	66K–82149–00	WIRE, LEAD 3 CABLE CONDUCTOR 3	1	1				
25	6G5–43144–00	HOOK, SPRING GANCHO	1	1				
26	97D95–06010	BOLT, HEXAGON DEEP RECESS TORNILLO HEXAGONAL	1	1				
27	6G5–43181–02	LEVER, TILT STOP 1 PALANCA TOPE INCLINACION 1	1	1				

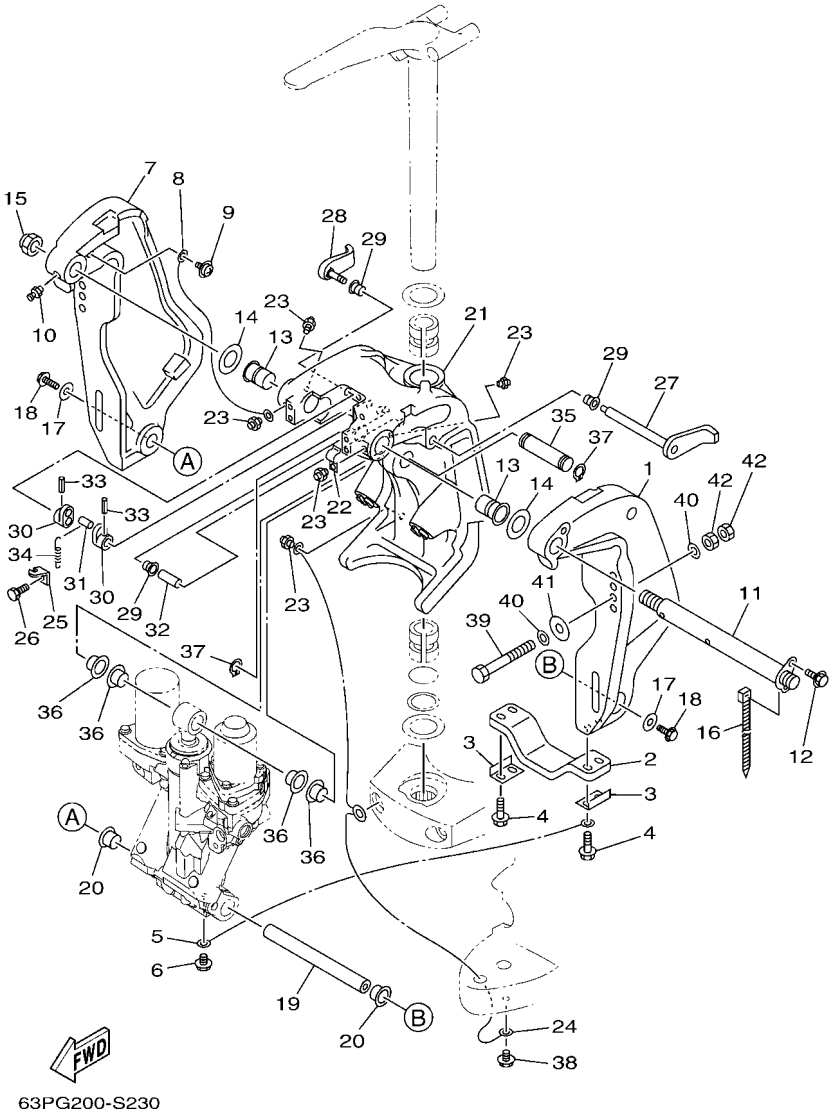

FIG. 23 BRACKET 1 — SOPORTE 1

REF. NO.	PART NO. CODIGO Nº	DESCRIPTION DESCRIPCION	6BME	6BNE				REMARKS OBSERVACIONES
28	6G5–43185–02	LEVER, TILT STOP 2 PALANCA TOPE INCLINACION 2	1	1				
29	90386–10M16	BUSH BUJE	3	3				
30	6G5–43148–00	COLLAR, DISTANCE COLLAR	2	2				
31	90249–06M19	PIN PASADOR	1	1				
32	90387–10M05	COLLAR ESPACIADOR	1	1				
33	91690–30020	PIN, SPRING PASADOR DE RESORTE	2	2				
34	90506–16003	SPRING, TENSION RESORTE DE TENSION	1	1				
35	64E–43126–10	PIN, UPPER SHOCK MOUNT PASADOR DE AMORTIGUADOR SUPERI	1	1				
36	90386–22M98	BUSH BUJE	4	4				
37	93410–22M11	CIRCLIP SEGURO	2	2				
38	95D95–06010	BOLT, FLANGE DEEP RECESS CERROJO, REBORDE HUECO PROFUND	1	1				
39	90101–12065	BOLT (L:130MM) TORNILLO (L:130MM)	4	4				
40	90201–13M01	WASHER, PLATE ARANDELA PLANA	8	8				
41	90201–12426	WASHER, PLATE ARANDELA PLANA	4	4				
42	95380–12600	NUT TUERCA	8	8				

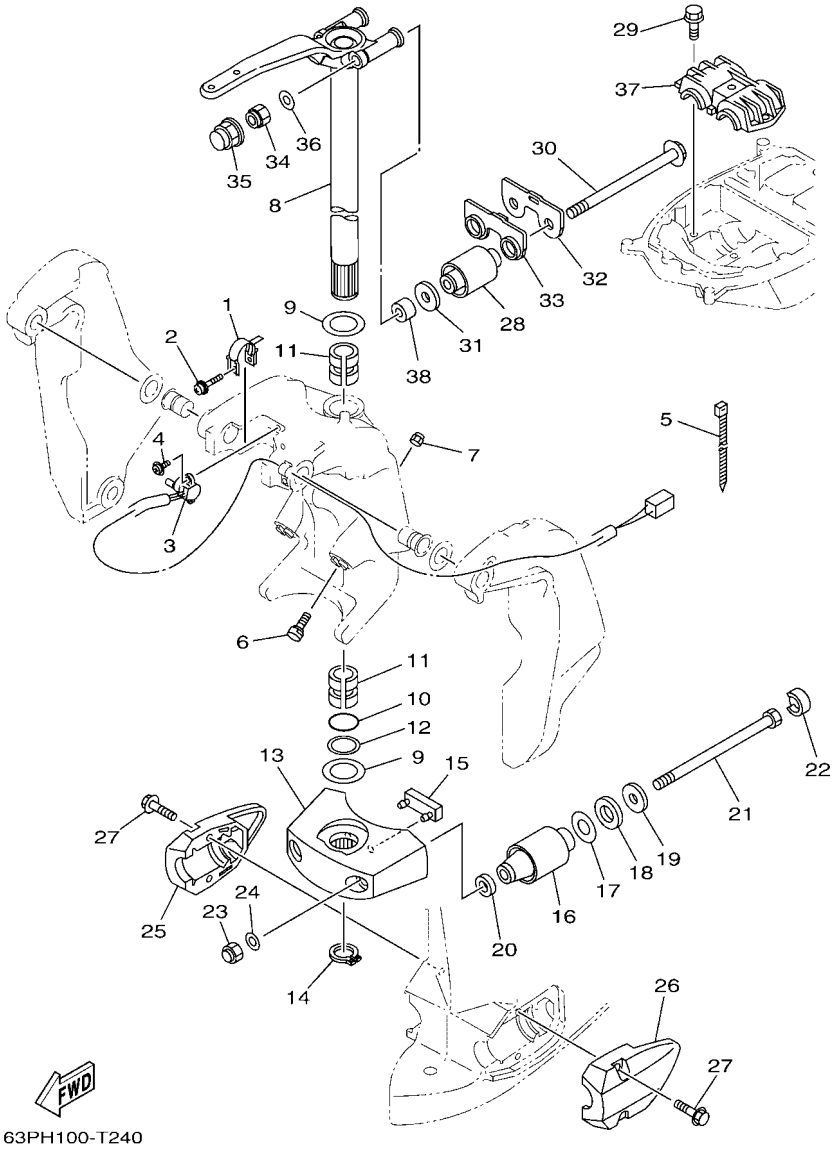

FIG. 24 BRACKET 2 — SOPORTE 2

REF. NO.	PART NO. CODIGO Nº	DESCRIPTION DESCRIPCION	6BME	6BNE				REMARKS OBSERVACIONES
1	64E–43139–11	CAM, TRIM SENDER LEVA TRANSMISOR DE INCLINDOR	1	1				
2	90159–05059	SCREW, WITH WASHER TORNILLO CON VALONA	1	1				
3	67H–83672–02	TRIM SENDER TRANSMISOR DE INCLINADOR	1	1				
4	97985–06216	SCREW, WITH WASHER TORNILLO, CON ARANDELA	2	2				
5	90465–11M10	CLAMP BRIDA	3	3				
6	61A–43376–00	BOLT, THRUST RECEIVER TORNILLO RECEPTOR	2	2				
7	95780–10300	NUT, FLANGE TUERCA	2	2				
8	6DA–42510–10–8D	STEERING BRACKET ASSY SOPORTE DIRECCION COMPL.	1	1				
9	90201–38M60	WASHER, PLATE ARANDELA PLANA	2	2				
10	93210–37MH7	O-RING ANILLO O	1	1				
11	90386–38M32	BUSH BUJE	2	2				
12	90202–40M47	WASHER, PLATE ARANDELA DE PLANA	1	1				
13	68V–44551–00–8D	HOUSING, LOWER MOUNT RUBBER 1 CAJA AMORTIGUADOR INFERIOR HU	1	1				
14	93410–37M04	CIRCLIP SEGURO	1	1				
15	61A–44575–01	DAMPER, LOWER MOUNT RUBBER AMORTIGUADOR INFERIOR	1	1				
16	63P–44555–00	MOUNT DAMPER, LOWER SIDE AMORTIGUADOR DE HULE LADO INFE	2	2				X(25.3") X(25.3")
17	90201–35008	WASHER, PLATE ARANDELA PLANA	2	2				
18	90202–32M19	WASHER, PLATE ARANDELA DE PLANA	2	2				
19	90201–16M55	WASHER, PLATE ARANDELA PLANA	2	2				
20	90201–15M58	WASHER, PLATE ARANDELA PLANA	2	2				
21	90109–14007	BOLT PERNO	2	2				
22	69J–44533–00	DAMPER, UPPER MOUNT RUBBER AMORTIGUADOR SUPERIOR	2	2				
23	90176–14003	NUT, CROWN TUERCA CORONA	2	2				
24	92995–14600	WASHER ARANDELA	2	2				
25	63P–44553–00–8D	COVER, LOWER MOUNT CUBIERTA,AMORTIGUADOR INFERIOR	1	1				
26	63P–44556–00–8D	COVER, LOWER MOUNT 2 CUBIERTA,AMORTIGUADOR INFERIOR	1	1				
27	90119–10058	BOLT, WITH WASHER TORNILLO CON ARANDELA	4	4				

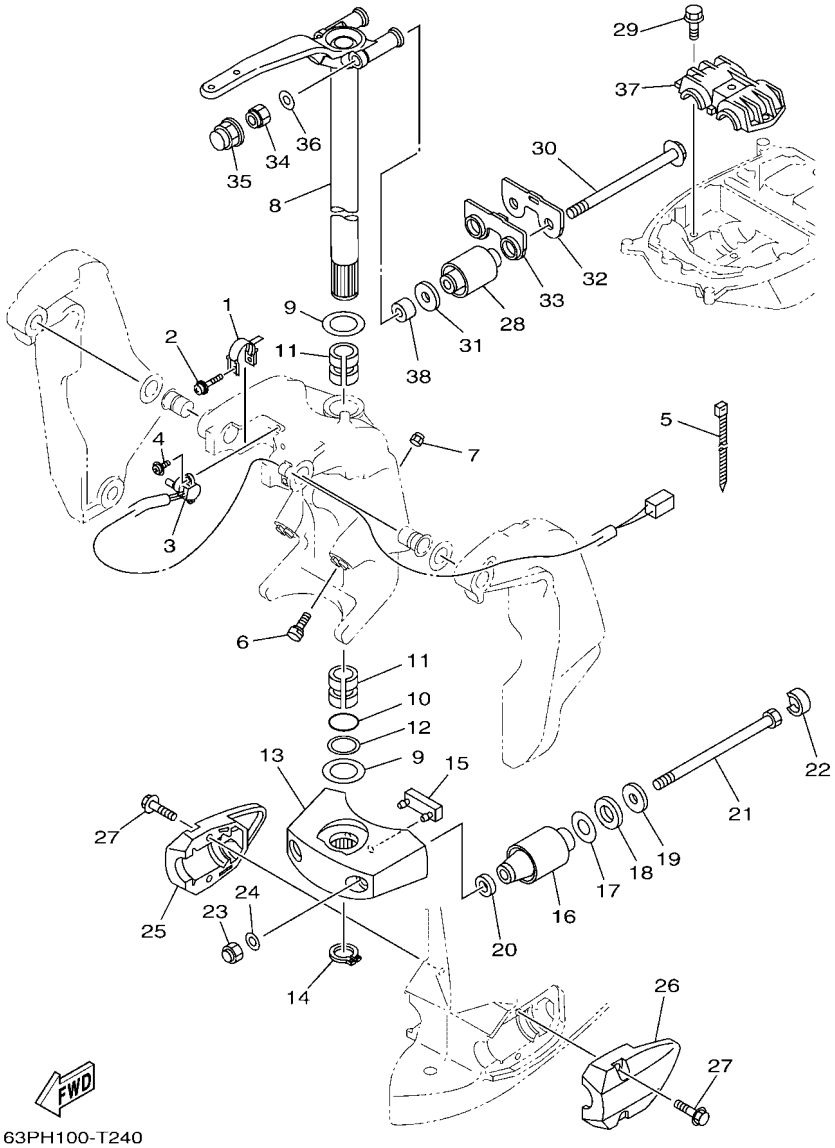

FIG. 24 BRACKET 2 — SOPORTE 2

REF. NO.	PART NO. CODIGO Nº	DESCRIPTION DESCRIPCION	6BME	6BNE				REMARKS OBSERVACIONES
28	6DA–44514–00	MOUNT DAMPER, UPPER SIDE AMORTIGUADOR LADO SUPERIOR	2	2				
29	90119–10024	BOLT, WITH WASHER TORNILLO CON ARANDELA	3	3				
30	90105–14009	BOLT, FLANGE TORNILLO	2	2				
31	90201–16M01	WASHER, PLATE ARANDELA PLANA	2	2				
32	6DA–44526–00	PLATE PLACA 1	1	1				
33	6DA–44532–00	STOPPER, UPPER MOUNT RETEN	1	1				
34	90185–14M00	NUT, SELF-LOCKING TUERCA AUTOBLOCANTE	2	2				
35	6DA–44194–00	CAP TAPA	2	2				
36	92995–14600	WASHER ARANDELA	2	2				
37	63P–44511–00	COVER, UPPER MOUNT CUBIERTA AMORTIGUADOR SUPERIOR	1	1				
38	90387–14004	COLLAR ESPACIADOR	2	2				

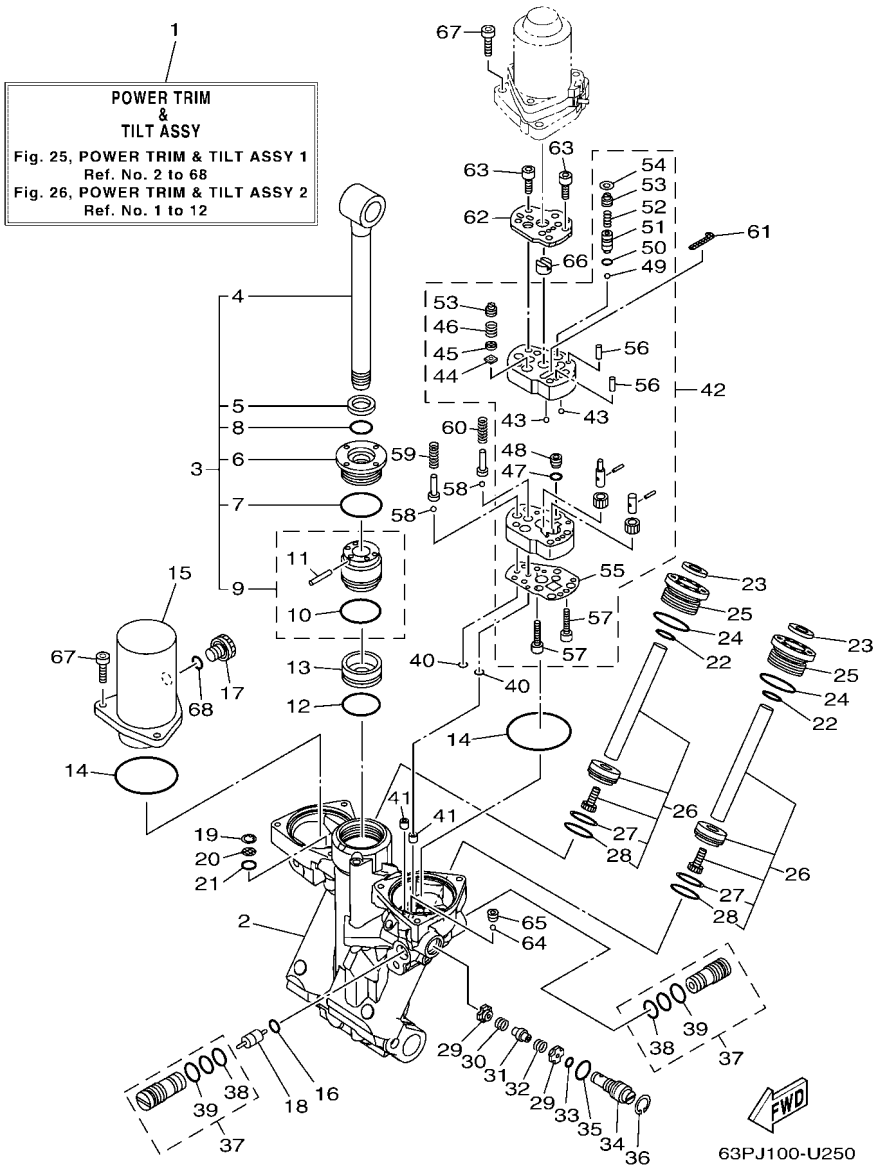

FIG. 25 POWER TRIM & TILT ASSY 1 — COMPONER Y PODER VARILLA 1

REF. NO.	PART NO. CODIGO Nº	DESCRIPTION DESCRIPCION	6BME	6BNE				REMARKS OBSERVACIONES
1	63P–43800–21	POWER TRIM & TILT ASSY ELEVADOR HIDRAULICO COMPL.	1	1				
2	63P–4380L–21	HOUSING, TRIM & TILT SUB ASSY CAJA, INCLINACION Y ADRNO	1	1				
3	63P–43810–21	TILT PISTON SUB ASSY ELEVADOR SUB-PISTON COMPL.	1	1				
4	63P–43801–10	.ROD .VALILLA COMPL INCLINACION	1	1				
5	93106–19001	.OIL SEAL .SELLO ACEITE	1	1				
6	63P–43811–20	.SCREW, CYLINDER END .TORNILLO CILINDRO EXTREMO	1	1				
7	63P–43861–20	.O-RING .ANILLO EN O 1	1	1				
8	63P–43863–10	.O-RING .ANILLO EN O 3	1	1				
9	63P–4380P–20	.PISTON SUB ASSY .SUB-PISTON COMPL	1	1				
10	6H1–43862–00	..O-RING ..ANILLO EN O 2	1	1				
11	91609–16010	..PIN, SPRING ..PASADOR DE RESORTE	1	1				
12	6H1–43862–00	O-RING ANILLO EN O 2	1	1				
13	63P–43814–20	PISTON, FREE PISTON LIBRE	1	1				
14	93210–68N50	O-RING ANILLO O	2	2				
15	63P–4382C–20	BODY, RESERVOIR 2 CUERPO DEPOSITO 2	1	1				
16	93210–09165	O-RING ANILLO O	1	1				
17	6CJ–43829–10	PLUG, RESERVOIR TAPON DEPOSITO	1	1				
18	6H1–43841–11	PISTON, SHUTTLE PISTON	1	1				
19	63P–43876–10	RING, SNAP ANILLO	1	1				
20	63P–43816–10	FILTER 1 FIELTRO 1	1	1				
21	93210–11N52	O-RING ANILLO O	1	1				
22	6D8–43863–00	O-RING ANILLO EN O 3	2	2				
23	63P–43812–20	SEAL, DUST SELLO DE POLVO	2	2				
24	63P–43862–10	O-RING ANILLO EN O 2	2	2				
25	63P–43821–21	SCREW, TRIM CYLINDER END TORNILLO CILINDRO EXTREMO	2	2				
26	63P–43820–20	TRIM PISTON SUB ASSY ELEVADOR PISTON COMPL.	2	2				
27	62X–43871–00	.RING, BACK UP .ANILLO	1	1				

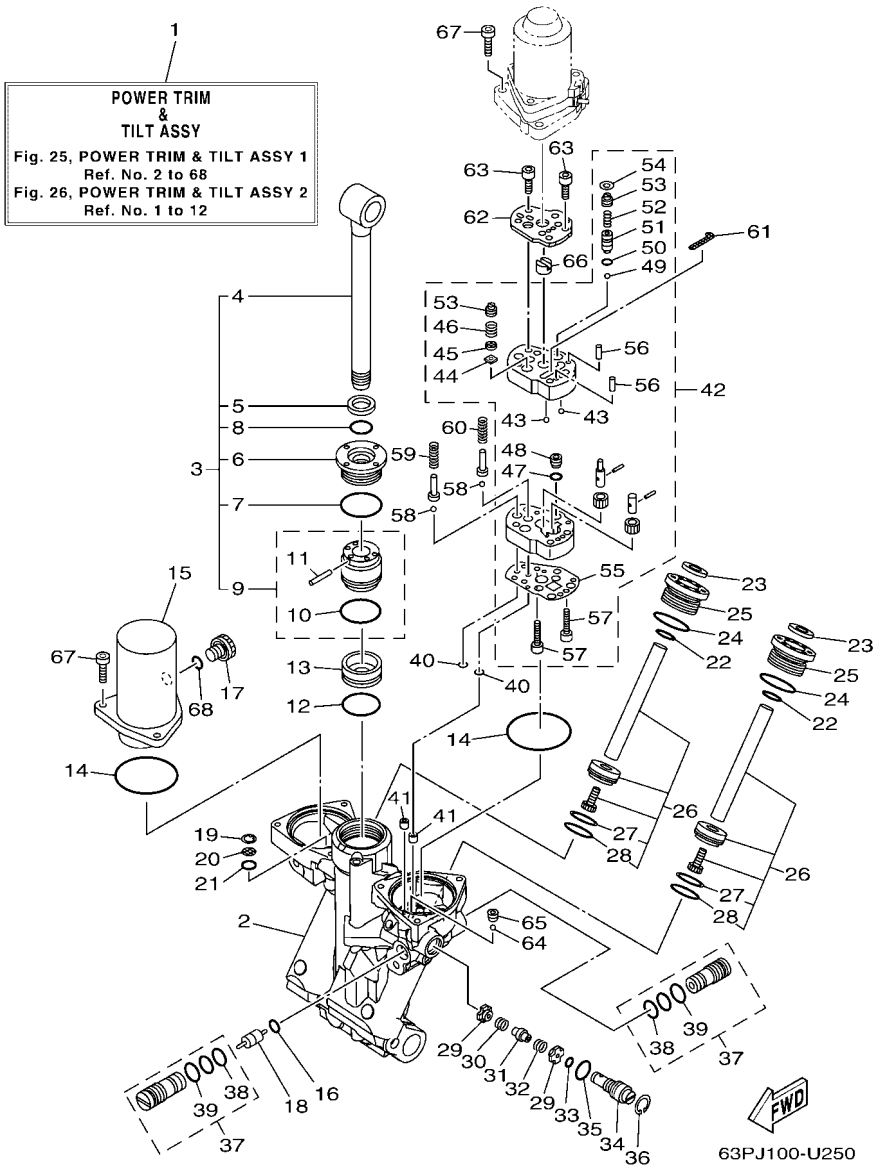

FIG. 25 POWER TRIM & TILT ASSY 1 — COMPONER Y PODER VARILLA 1

REF. NO.	PART NO. CODIGO Nº	DESCRIPTION DESCRIPCION	6BME	6BNE				REMARKS OBSERVACIONES
28	93210–29375	.O-RING .ANILLO O	1	1				
29	63P–43847–10	SEAT, MANUAL VALVE ASIENTO VALVULA MANUAL	2	2				
30	63P–43854–10	SPRING, MANUAL RELEASE RESORTE DESCOPLO MANUAL	1	1				
31	63P–4382A–10	ADAPTOR 1 ADAPTADOR 1	1	1				
32	63P–4384H–10	SPRING RESORTE	1	1				
33	69J–4389J–00	O-RING ANILLO O	1	1				
34	63P–43845–20	SCREW, MANUAL RELEASE TORNILLO DESCOPLO MANUAL	1	1				
35	93210–12327	O-RING ANILLO O	1	1				
36	61A–43876–01	RING, SNAP ANILLO	1	1				
37	63P–43802–20	VALVE SUB ASSY VALVULA PRINCIPAL COMPL.	2	2				
38	93210–12N52	.O-RING .ANILLO O	1	1				
39	6H1–43866–01	.O-RING .ANILLO EN O 6	1	1				
40	93210–064A5	O-RING ANILLO O	2	2				
41	63P–4381C–20	FILTER 3 FIELTRO 3	2	2				
42	63P–43830–20	GEAR PUMP ASSY ENGRANAJE BOMBA COMPL.	1	1				
43	93503–16003	.BALL .ESFERA	2	2				
44	6H1–4384G–11	.SEAL, RELIEF VALVE .ASIENTO	1	1				
45	6H1–43844–10	.PIN, VALVE SUPPORT .PASADOR VALVULA SOPORTE	1	1				
46	6H1–43856–10	.SPRING, DOWN RELIEF .RESORTE SEGURIDAD	1	1				
47	93210–07N51	.O-RING .ANILLO O	1	1				
48	63P–43851–20	.SEAT, RELIEF VALVE .ASIENTO VALVULA DE DESCARGA	1	1				
49	93501–08001	.BALL .BOLA	1	1				
50	93210–064A5	.O-RING .ANILLO O	1	1				
51	63P–43844–20	.PIN, VALVE SUPPORT .PASADOR VALVULA SOPORTE	1	1				
52	69J–43855–00	.SPRING, UP RELIEF .RESORTE SEGURIDAD SUPERIOR	1	1				
53	63P–43843–10	.SCREW, VALVE LOCK .TORNILLO	2	2				
54	63P–43338–10	.WASHER, WAVE .ARANDELA ONDULADA	1	1				

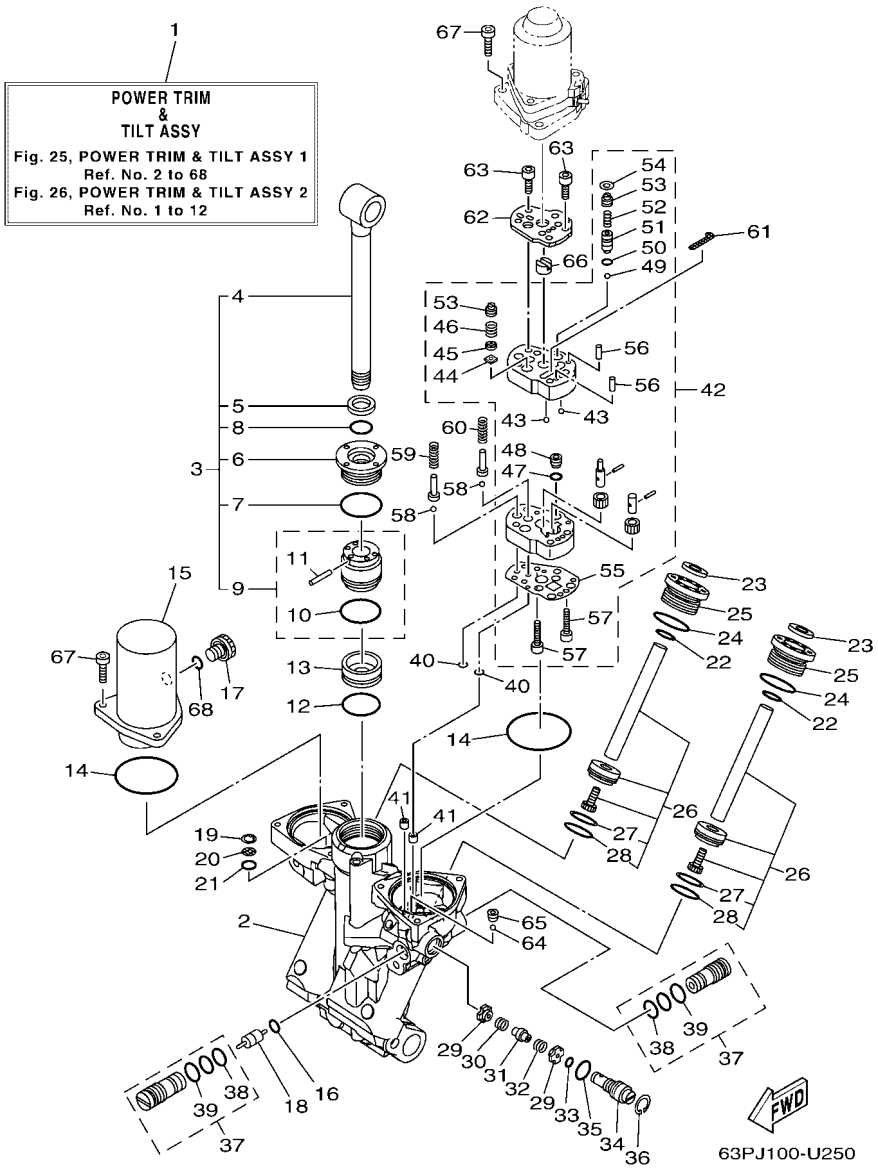

FIG. 25 POWER TRIM & TILT ASSY 1 — COMPONER Y PODER VARILLA 1

REF. NO.	PART NO. CODIGO Nº	DESCRIPTION DESCRIPCION	6BME	6BNE				REMARKS OBSERVACIONES
55	63P–4384G–20	.SEAL, RELIEF VALVE .ASIENTO	1	1				
56	93604–10011	.PIN, DOWEL .PASADOR DE CLAVIJA	2	2				
57	91312–04020	.BOLT, HEXAGON SOCKET HEAD .TORNILLO ALLEN	2	2				
58	93501–08001	BALL BOLA	2	2				
59	63P–43857–10	SPRING, ABSORBER VALVE RESORTE	1	1				
60	63P–4385H–10	SPRING, SEAL RESORTE	1	1				
61	6CJ–43816–00	FILTER 1 FIELTRO 1	1	1				
62	63P–4381J–10	PLATE PLACA	1	1				
63	91312–05035	BOLT, HEXAGON SOCKET HEAD TORNILLO ALLEN	4	4				
64	93505–32038	BALL BOLA	1	1				
65	61A–43878–00	BOLT, SOCKET TORNILLO ENCASTRE	1	1				
66	69J–43831–00	CONNECTOR, SHAFT CONEXION EJE	1	1				
67	91380–06025	BOLT PERNO	6	6				
68	6CJ–43861–10	O-RING ANILLO EN O 1	1	1				

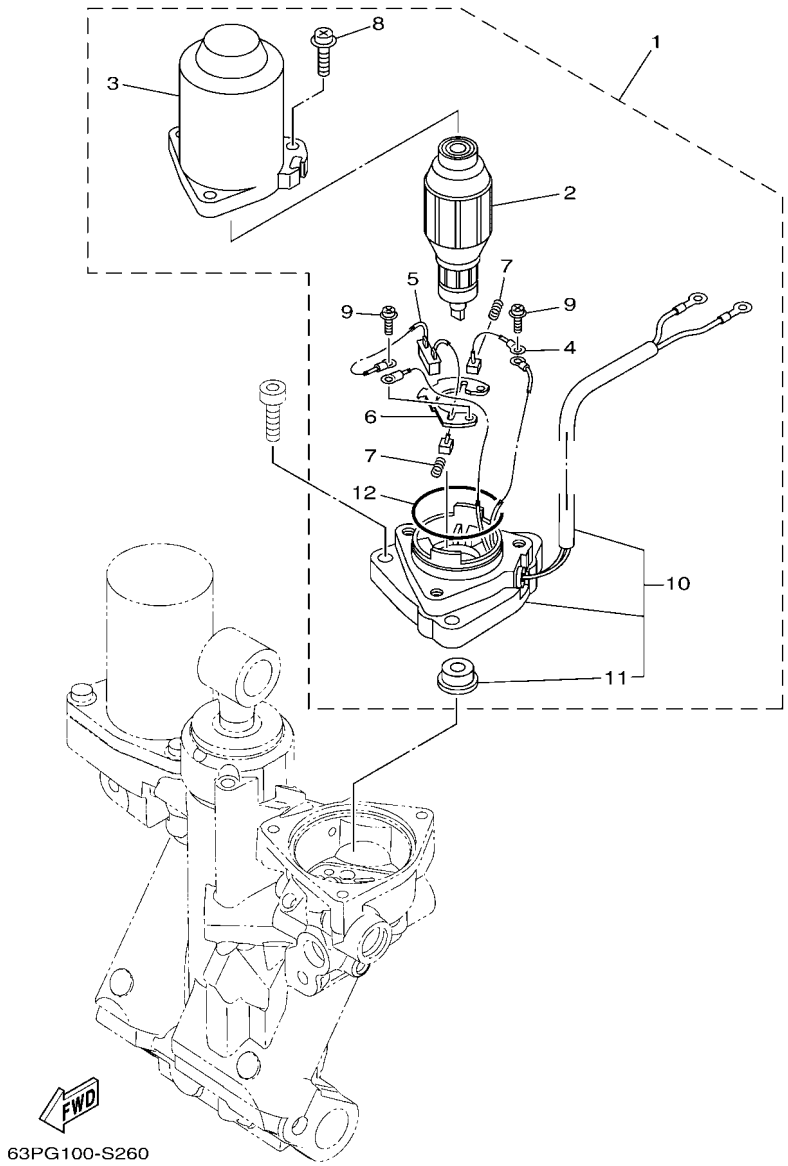

FIG. 26 POWER TRIM & TILT ASSY 2 — COMPONER Y PODER VARILLA 2

REF. NO.	PART NO. CODIGO Nº	DESCRIPTION DESCRIPCION	6BME	6BNE				REMARKS OBSERVACIONES
1	63P–43880–22	MOTOR ASSY MOTOR COMPL.	1	1				
2	6EK–43805–01	.ARMATURE ASSY .INDUCIDO COMPL.	1	1				
3	6EK–43804–11	.STATOR ASSY .ESTATOR COMPL	1	1				
4	6EK–43892–00	.BRUSH 2 .ESCOBILLA 2	1	1				
5	63P–82181–20	.CIRCUIT BREAKER COMP. .RUPTOR DE CIRCUITO COMPL	1	1				
6	6EK–4380F–00	.PLATE, BRUSH HOLDER .PLACA	1	1				
7	62X–4386K–00	.SPRING, BRUSH .RESORTE, ESCOBILLA	2	2				
8	63P–43879–10	.SCREW, WITH WASHER .TORNILLO CON RONDANA	3	3				
9	97602–04316	.SCREW, PAN HEAD WITH WASHER .TORNILLO CON RONDONA	2	2				
10	63P–43881–21	.FRAME, END .CUADRO EXTERMO	1	1				
11	6EK–43882–00	..OIL SEAL ..SELLO ACEITE	1	1				
12	6EK–43862–00	.O-RING .ANILLO EN O 2	1	1				

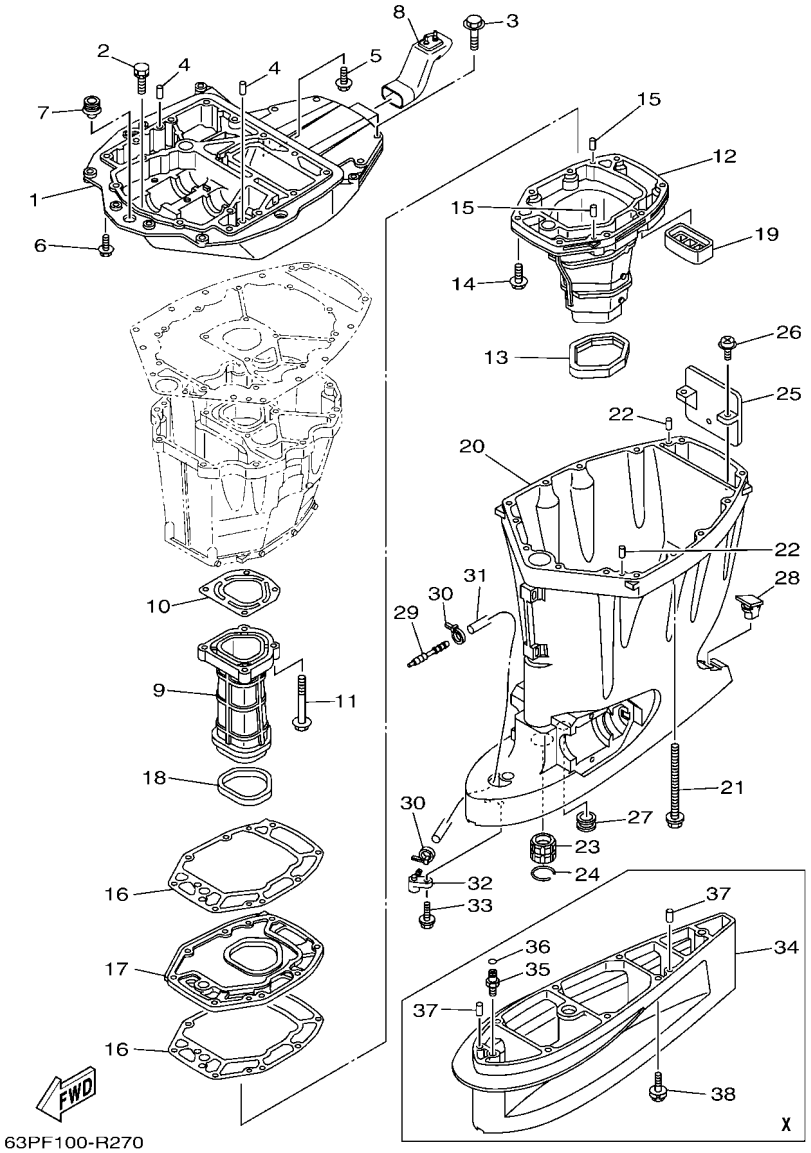

63PF100-R270

FIG. 27 UPPER CASING — FUNDA SUPERIOR

REF. NO.	PART NO. CODIGO Nº	DESCRIPTION DESCRIPCION	6BME	6BNE				REMARKS OBSERVACIONES
1	63P–41137–05	GUIDE, EXHAUST GUIA DE ESCAPE	1	1				
2	90119–08182	BOLT, WITH WASHER TORNILLO CON ARANDELA	2	2				
3	97E75–10545	BOLT, HEXAGON W/W DEEP RECESS TORNILLO HEXAGONAL CON RONDONA	4	4				
4	93608–16M16	PIN, DOWEL PASADOR DE CLAVIJA	2	2				
5	90119–08189	BOLT, WITH WASHER TORNILLO CON ARANDELA	3	3				
6	97E75–10535	BOLT, HEXAGON W/W DEEP RECESS TORNILLO HEXAGONAL CON RONDONA	4	4				
7	6E5–42724–01	GROMMET TAPON	1	1				
8	6DA–42769–01	SEAL, RUBBER SELLO DE GOMA	1	1				
9	63P–41131–02	MANIFOLD, EXT. 1 TUBO MULTIPLE DE ESCAPE	1	1				
10	63P–41133–A0	GASKET, EXHAUST MANIFOLD 1 EMPAQUE ESCAPE MULTIPLE	1	1				
11	97E75–08560	BOLT, HEXAGON W/W DEEP RECESS TORNILLO HEXAGONAL CON RONDONA	4	4				
12	63P–14711–02	MUFFLER 1 SILENCIADOR 1	1	1				
13	69J–45123–00	GASKET, MUFFLER EMPAQUE SILENCIADOR	1	1				
14	97E75–08535	BOLT, HEXAGON W/W DEEP RECESS TORNILLO HEXAGONAL CON RONDONA	8	8				
15	93606–19M23	PIN, DOWEL PASADOR DE CLAVIJA	2	2				
16	63P–41134–A1	GASKET, EXHAUST MANIFOLD EMPAQUE	2	2				
17	63P–45181–02	PLATE PLACA	1	1				
18	63P–41138–00	SEAL, EXT. 1 SELLO, ESCAPE 1	1	1				
19	69J–45127–01	SEAL SELLO DE GOMA	1	1				
20	63P–45111–00–8D	CASING, UPPER CAJA SUPERIOR	1	1				
21	90119–10007	BOLT, WITH WASHER TORNILLO CON ARANDELA	8	8				
22	93608–16M16	PIN, DOWEL PASADOR DE CLAVIJA	2	2				
23	6E5–45318–00	BUSHING, DRIVE SHAFT BUJE, EJE DE MANDO	1	1				
24	93420–36M01	CIRCLIP SEGURO	1	1				
25	69J–14624–01	COVER, EXHAUST CUBIERTA ESCAPE	1	1				
26	97980–06216	SCREW, WITH WASHER TORNILLO, CON ARANDELA	2	2				
27	6E5–44366–01	DAMPER, WATER SEAL 2 GOMA DEL SELLO DE AGUA 2	1	1				

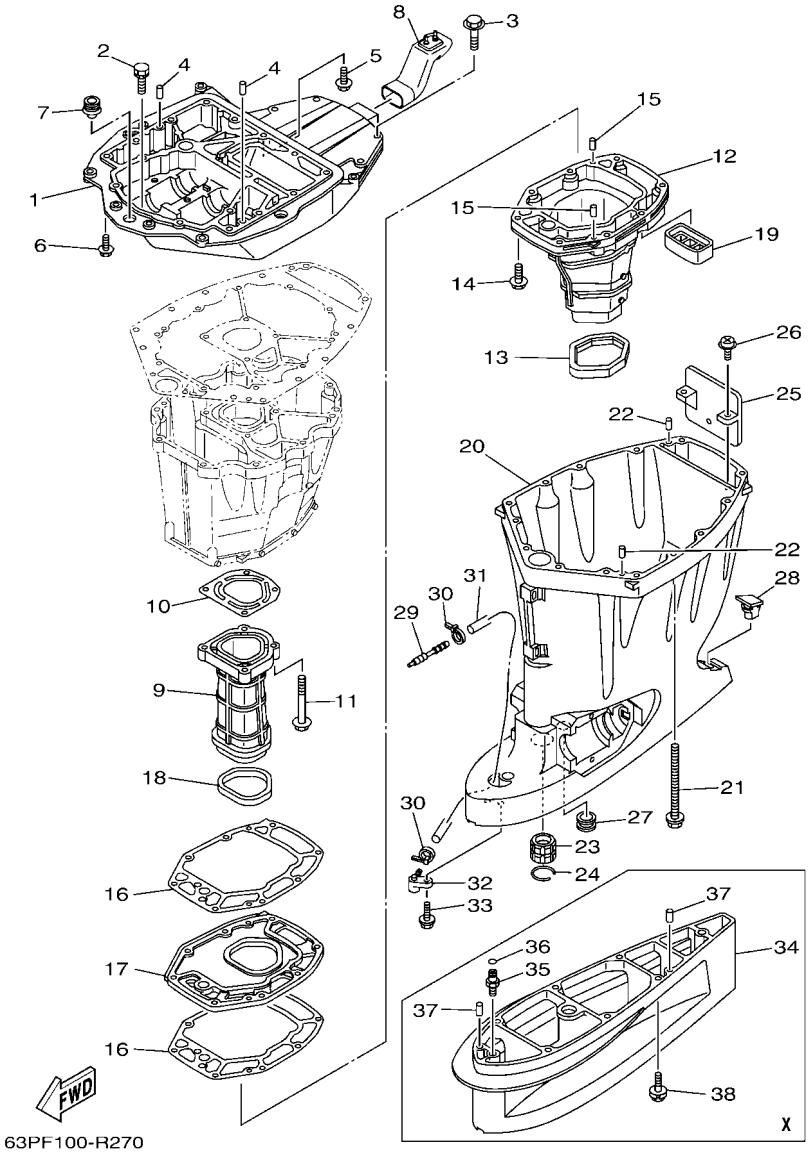

FIG. 27 UPPER CASING — FUNDA SUPERIOR

REF. NO.	PART NO. CODIGO Nº	DESCRIPTION DESCRIPCION	6BME	6BNE				REMARKS OBSERVACIONES
28	6C5–45155–01	CAP TAPA	1	1				
29	6E5–83558–00	END, NIPPLE EXTREMO DE NIPLE	1	1				
30	90465–11M10	CLAMP BRIDA	2	2				
31	90445–070F1	HOSE (L950) TUBO (L950)	1	1				
32	63P–45379–00	NIPPLE, HOSE NIPLE DE MANGUERA	1	1				
33	90119–06287	BOLT, WITH WASHER TORNILLO CON ARANDELA	1	1				
34	6BM–45211–00–8D	EXTENSION EXTENSION	1	1				X(25.3") X(25.3")
35	63P–45378–00	NIPPLE, HOSE NIPLE MANGUERA	1	1				X(25.3") X(25.3")
36	93210–07003	O-RING ANILLO O	1	1				X(25.3") X(25.3")
37	93608–16M16	PIN, DOWEL PASADOR DE CLAVIJA	2	2				X(25.3") X(25.3")
38	97E95–10645	BOLT, HEXAGON W/W DEEP RECESS TORNILLO HEXAGONAL CON RONDONA	6	6				X(25.3") X(25.3")

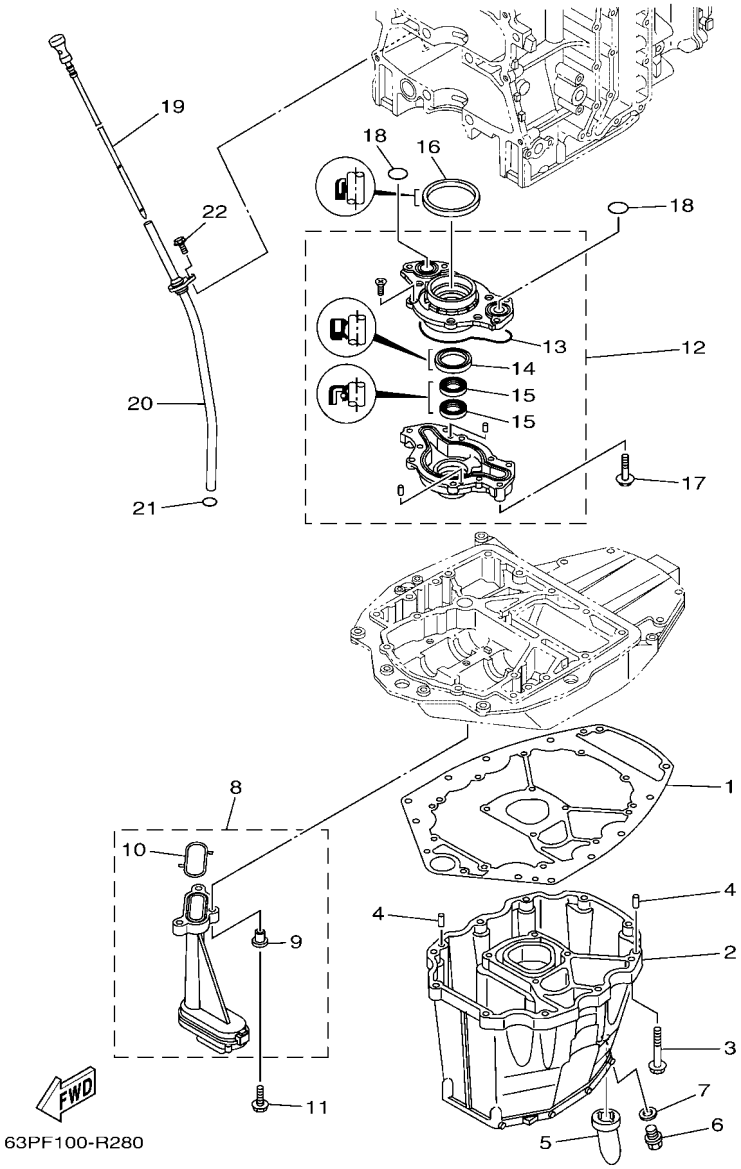

FIG. 28 OIL PAN

OIL PAN

REF. NO.	PART NO. CODIGO Nº	DESCRIPTION DESCRIPCION	6BME	6BNE				REMARKS OBSERVACIONES
1	63P–15312–02	GASKET, OIL PAN EMPAQ BANDEJA DE ACEITE	1	1				
2	63P–15311–11	OIL PAN BANDEJA DE ACEITE	1	1				
3	97E75–08535	BOLT, HEXAGON W/W DEEP RECESS TORNILLO HEXAGONAL CON RONDONA	10	10				
4	93608–16M16	PIN, DOWEL PASADOR DE CLAVIJA	2	2				
5	63P–15316–01	DAMPER 1 AMORTIGUADOR 1	1	1				
6	90340–14M06	PLUG, STRAIGHT SCREW TORNILLO, DE DRENAJE	1	1				
7	90430–14M09	GASKET JUNTA	1	1				
8	63P–13411–00	STRAINER, OIL FILTRO DE ACEITE	1	1				
9	90387–06263	.COLLAR .ESPACIADOR	3	3				
10	63P–13415–00	.SEAL, OIL STRAINER .SELLO COLADOR ACEITE	1	1				
11	95812–06025	BOLT, FLANGE TORNILLO DE REBORDE	3	3				
12	63P–13300–02	OIL PUMP ASSY BOMBA DE ACEITE COMPLETA	1	1				
13	63P–13329–00	.GASKET, PUMP COVER .EMPAQUE TAPA DE BOMBA	1	1				
14	6AW–13119–00	.OIL SEAL .SELLO ACEITE	1	1				
15	69J–13631–00	.OIL SEAL .SELLO ACEITE	2	2				
16	69J–11355–00	SEAL, CYLINDER 1 RETEN ACEITE CILINDRO 1	1	1				
17	97E95–06540	BOLT, HEXAGON W/W DEEP RECESS TORNILLO HEXAGONAL CON RONDONA	4	4				
18	93210–25552	O-RING ANILLO O	2	2				
19	63P–15362–10	PLUG, OIL LEVEL TAPON DEL NIVEL DE ACEITE	1	1				
20	63P–15377–10	GUIDE, INLET GUIA DE ENTRADA	1	1				
21	93210–19MJ3	O-RING ANILLO O	1	1				
22	95D95–06016	BOLT, FLANGE DEEP RECESS CERROJO, REBORDE HUECO PROFUND	1	1				

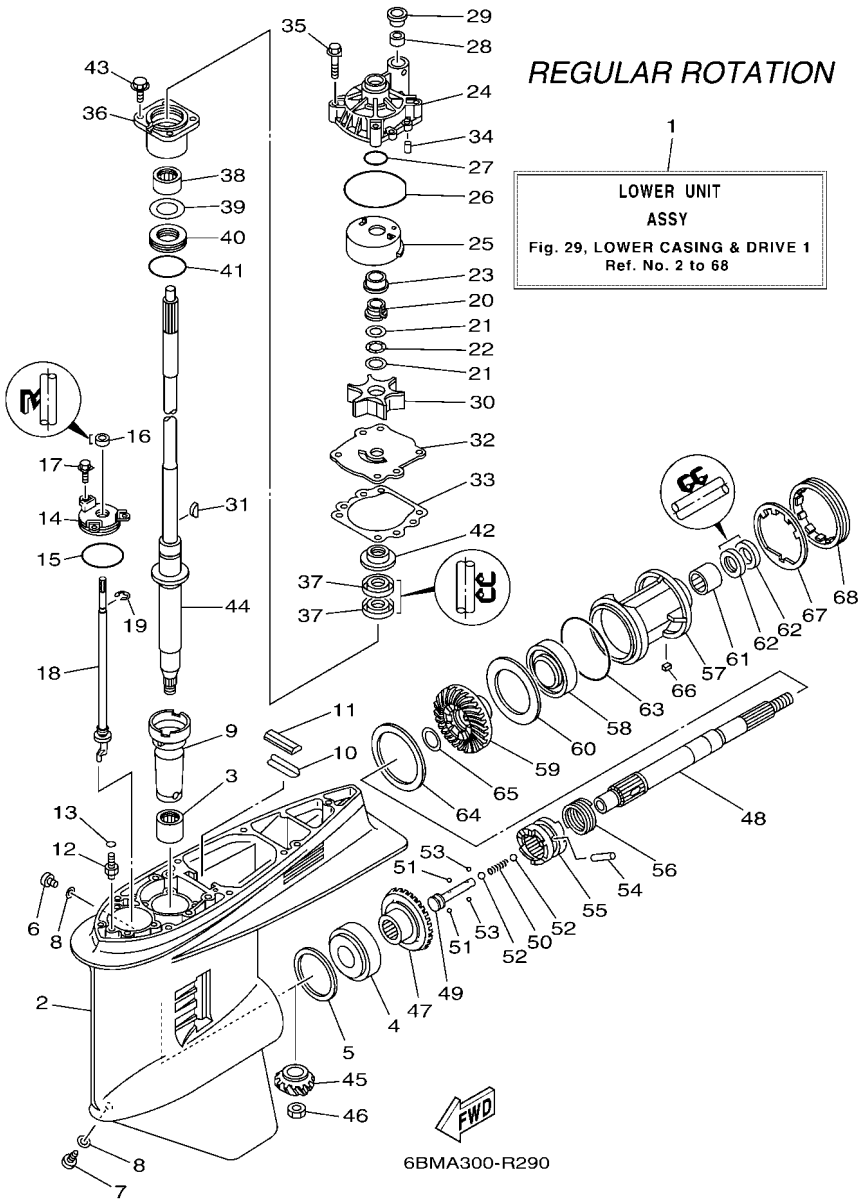

FIG. 29 LOWER CASING & DRIVE 1 — IMPULSOR E INFERIOR 1

REF. NO.	PART NO. CODIGO Nº	DESCRIPTION DESCRIPCION	6BME	6BNE				REMARKS OBSERVACIONES
1	6BM–45300–15–8D	LOWER UNIT ASSY CONJUNTO UNIDAD INFERIOR	1					X(25.3"),RH X(25.3"),RH
2	6BM–45301–01–8D	CASING, LOWER FUNDA INFERIOR COMPLETA	1					
3	93311–928U5	BEARING COJINETE DE RODILLOS	1					
4	93332–000V3	BEARING COJINETE	1					
5	6G5–45567–01	SHIM (T:0.10MM) LAINA (T:0.10MM)	1					UR UR
	6G5–45567–10	SHIM (T:0.12MM) LAINA (T:0.12MM)	1					UR UR
	6G5–45567–20	SHIM (T:0.15MM) LAINA (T:0.15MM)	1					UR UR
	6G5–45567–30	SHIM (T:0.18MM) LAINA (T:0.18MM)	1					UR UR
	6G5–45567–40	SHIM (T:0.30MM) LAINA (T:0.30MM)	1					UR UR
	6G5–45567–50	SHIM (T:0.40MM) LAINA (T:0.40MM)	1					UR UR
	6G5–45567–60	SHIM (T:0.50MM) LAINA (T:0.50MM)	1					UR UR
6	90340–08002	PLUG, STRAIGHT SCREW TORNILLO, DE DRENAJE	1					
7	688–45341–10	PLUG, DRAIN TAPON, DREN	1					
8	90430–08003	GASKET JUNTA	2					
9	6G5–45536–01	SLEEVE, DRIVE SHAFT CAMISA EJE DE MANDO	1					
10	663–45376–00	GUIDE, SEAL DAMPER GUIA DE SELLO GOMA	1					
11	688–45375–00	DAMPER, SEAL GOMA DE SELLO	1					
12	63P–45378–00	NIPPLE, HOSE NIPLE MANGUERA	1					
13	93210–07003	O-RING ANILLO O	1					
14	6E5–45321–00	PLATE PLACA	1					
15	93210–58144	O-RING ANILLO O	1					
16	93106–09014	OIL SEAL SELLO ACEITE	1					
17	90119–06286	BOLT, WITH WASHER TORNILLO CON ARANDELA	3					
18	63P–44150–11	SHIFT CAM ASSY CONJUNTO EJE LEVA COMPL.	1					X(25.3"),RH X(25.3"),RH
19	99001–08600	CIRCLIP PRESILLA REDONDA	1					
20	61A–45538–00	SPACER 1 ESPACIADOR 1	1					
21	90201–22M01	WASHER, PLATE ARANDELA PLANA	2					

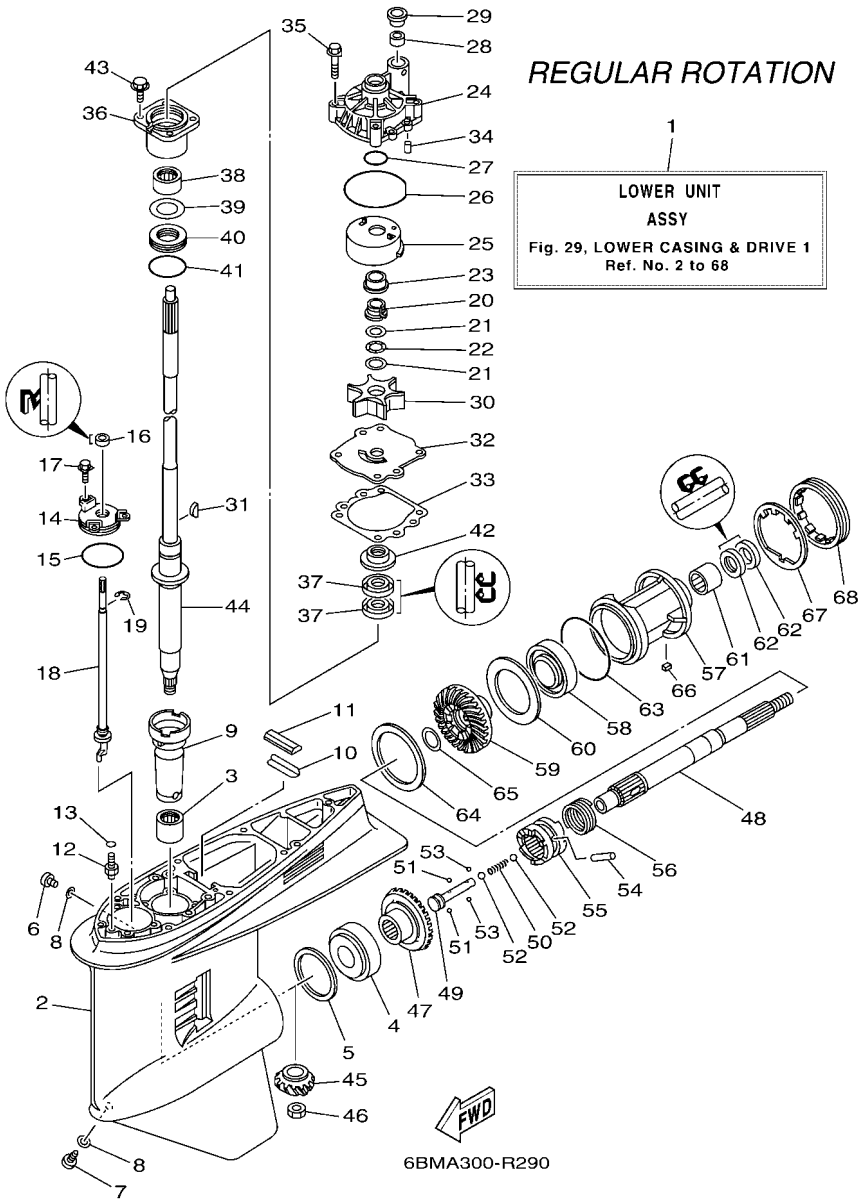

FIG. 29 LOWER CASING & DRIVE 1 — IMPULSOR E INFERIOR 1

REF. NO.	PART NO. CODIGO Nº	DESCRIPTION DESCRIPCION	6BME	6BNE				REMARKS OBSERVACIONES
22	90206–22M19	WASHER, WAVE ARANDELA ONDULADA	1					
23	61A–45527–00	COLLAR, DRIVE SHAFT COLLAR EJE FLECHA DE PROPULSIO	1					
24	61A–44311–01	HOUSING, WATER PUMP CAJA BOMBA DE AGUA	1					
25	6R3–44322–42	INSERT, CARTRIDGE CARTUCHO	1					FOR CHROMATE FOR CHROMATE
26	93210–86M38	O-RING ANILLO O	1					
27	93210–37160	O-RING ANILLO O	1					
28	6E5–44365–01	DAMPER, WATER SEAL 1 HULE DE SELLO DE AGUA 1	1					
29	6E5–44312–00	COVER, WATER PUMP HOUSING CUBIERTA CAJA BOMBA DE AGUA	1					
30	6E5–44352–01	IMPELLER IMPULSOR	1					
31	90280–04M05	KEY, WOODRUFF CUNA WOODRUFF	1					
32	6G5–44323–41	OUTER PLATE, CARTRIDGE PLACA EXTERIOR DEL CARTUCHO	1					FOR CHROMATE FOR CHROMATE
33	6E5–44315–A0	GASKET, WATER PUMP EMPAQUE	1					
34	93606–12019	PIN, DOWEL PASADOR DE CLAVIJA	2					
35	90119–08191	BOLT, WITH WASHER TORNILLO CON ARANDELA	4					
36	6E5–45331–00–9S	HOUSING, BEARING CAJA DE COJINETE	1					
37	93101–28M16	OIL SEAL SELLO ACEITE	2					
38	93317–330U2	BEARING COJINETE	1					
39	6E5–45587–01	SHIM (T:0.10MM) LAINA (T:0.10MM)	1					UR UR
	6E5–45587–10	SHIM (T:0.12MM) LAINA (T:0.12MM)	1					UR UR
	6E5–45587–20	SHIM (T:0.15MM) LAINA (T:0.15MM)	1					UR UR
	6E5–45587–30	SHIM (T:0.18MM) LAINA (T:0.18MM)	1					UR UR
	6E5–45587–40	SHIM (T:0.30MM) LAINA (T:0.30MM)	1					UR UR
	6E5–45587–50	SHIM (T:0.40MM) LAINA (T:0.40MM)	1					UR UR
	6E5–45587–60	SHIM (T:0.50MM) LAINA (T:0.50MM)	1					UR UR
40	93341–930V2	BEARING COJINETES CON RODAMIENTOS	1					
41	93210–55M14	O-RING ANILLO O	1					
42	6E5–45344–00	COVER, OIL SEAL CUBIERTA SELLO ACEITE	1					

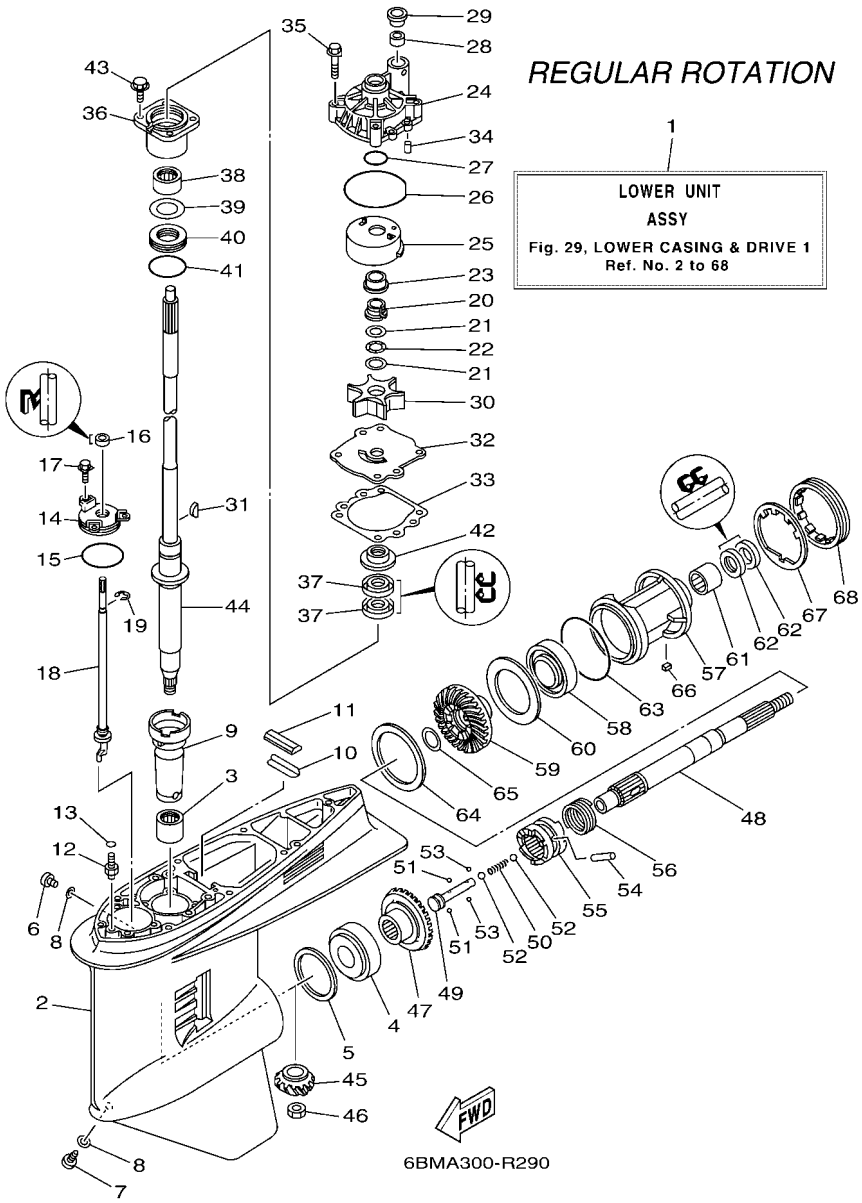

FIG. 29 LOWER CASING & DRIVE 1 — IMPULSOR E INFERIOR 1

REF. NO.	PART NO. CODIGO Nº	DESCRIPTION DESCRIPCION	6BME	6BNE				REMARKS OBSERVACIONES
43	97E95–08525	BOLT, HEXAGON W/W DEEP RECESS TORNILLO HEXAGONAL CON RONDONA	4					
44	63P–45501–11	DRIVE SHAFT COMP. EJE DE MANDO COMPL.	1					X(25.3") X(25.3")
45	63P–45551–00	PINION (14T) PINON (14T)	1					
46	90170–16M01	NUT TUERCA	1					
47	6EH–45560–00	GEAR 1 (28T) ENGRANAJE 1 (28T)	1					
48	6J9–45611–01	SHAFT, PROPELLER EJE PROPUSOR	1					
49	6E5–45634–02	SLIDE, SHIFT DESLIZADOR, CAMBIO	1					
50	90501–16M37	SPRING, COMPRESSION RESORTE DE COMPRESION	1					
51	93507–32009	BALL ESFERA	2					
52	93511–32017	BALL ESFERA	2					
53	93503–16003	BALL ESFERA	2					
54	90250–08M07	PIN, STRAIGHT PASADOR CILINDRICO	1					
55	6DA–45631–01	CLUTCH, DOG EMBRAGUE DE GARRA	1					
56	6E5–45633–01	RING, CROSS PIN ANILLO DE PASADOR	1					
57	6BM–45332–00–9S	HOUSING, BEARING CAJA BALERO 2	1					
58	93306–209U0	BEARING COJINETE	1					
59	6EH–45571–00	GEAR 2 (28T) ENGRANAJE 2 (28T)	1					
60	6G5–45576–10	WASHER, THRUST 2 ARANDELA DE EMPUJE AXIAL 2	1					
61	93315–43061	BEARING COJINETE DE RODILLOS	1					
62	93101–30M17	OIL SEAL SELLO ACEITE	2					
63	93210–97M55	O-RING ANILLO O	1					
64	6G5–45577–02	SHIM (T:0.10MM) LAINA (T:0.10MM)	1					UR UR
	6G5–45577–10	SHIM (T:0.12MM) LAINA (T:0.12MM)	1					UR UR
	6G5–45577–20	SHIM (T:0.15MM) LAINA (T:0.15MM)	1					UR UR
	6G5–45577–30	SHIM (T:0.18MM) LAINA (T:0.18MM)	1					UR UR
	6G5–45577–40	SHIM (T:0.30MM) LAINA (T:0.30MM)	1					UR UR
	6G5–45577–50	SHIM (T:0.40MM) LAINA (T:0.40MM)	1					UR UR

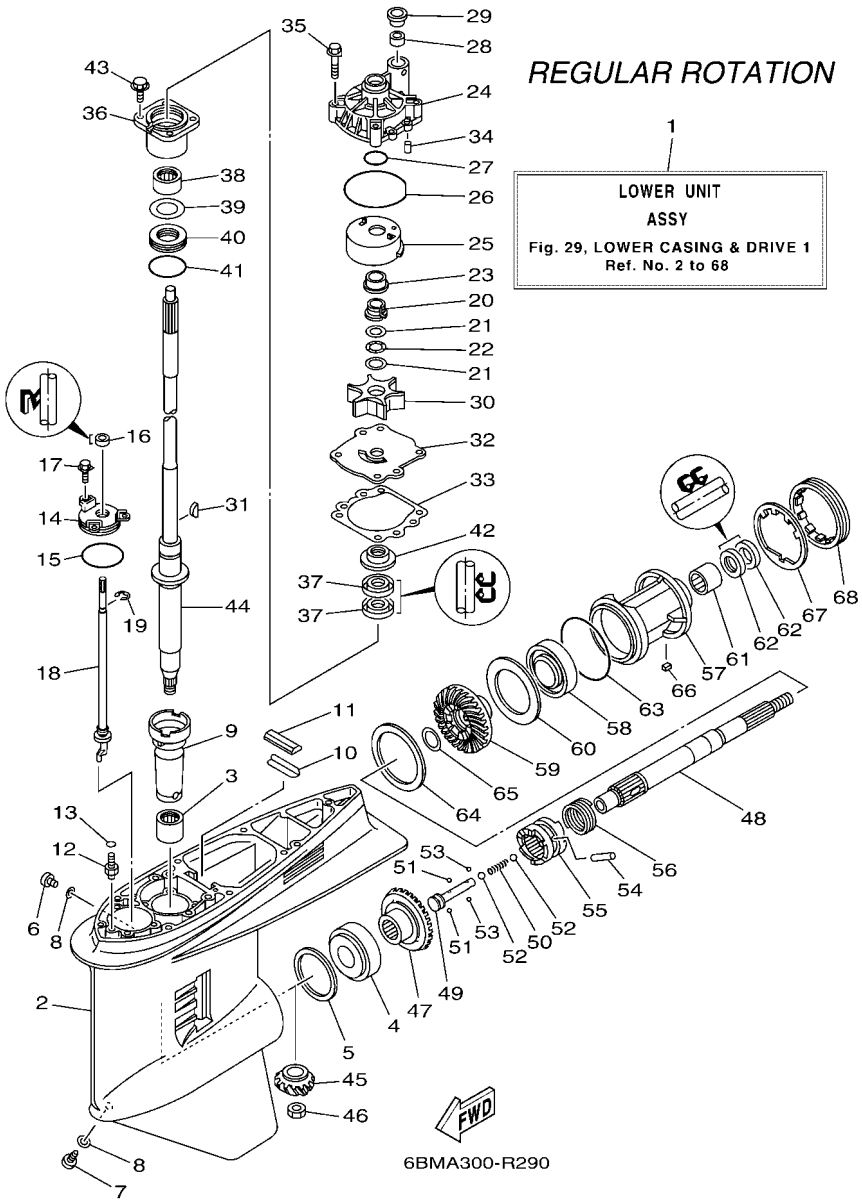

FIG. 29 LOWER CASING & DRIVE 1 — IMPULSOR E INFERIOR 1

REF. NO.	PART NO. CODIGO Nº	DESCRIPTION DESCRIPCION	6BME	6BNE				REMARKS OBSERVACIONES
64	6G5–45577–60	SHIM (T:0.50MM) LAINA (T:0.50MM)	1					UR UR
65	90201–30M92	WASHER, PLATE ARANDELA PLANA	1					
66	90282–04M00	KEY, STRAIGHT CHAVETA, RECTA	1					
67	6G5–45383–01	WASHER, CLAW ARANDELA DE UNA	1					
68	6G5–45384–02	NUT TUERCA	1					

FIG. 30 LOWER CASING & DRIVE 2 — IMPULSOR E INFERIOR 2

REGULAR ROTATION

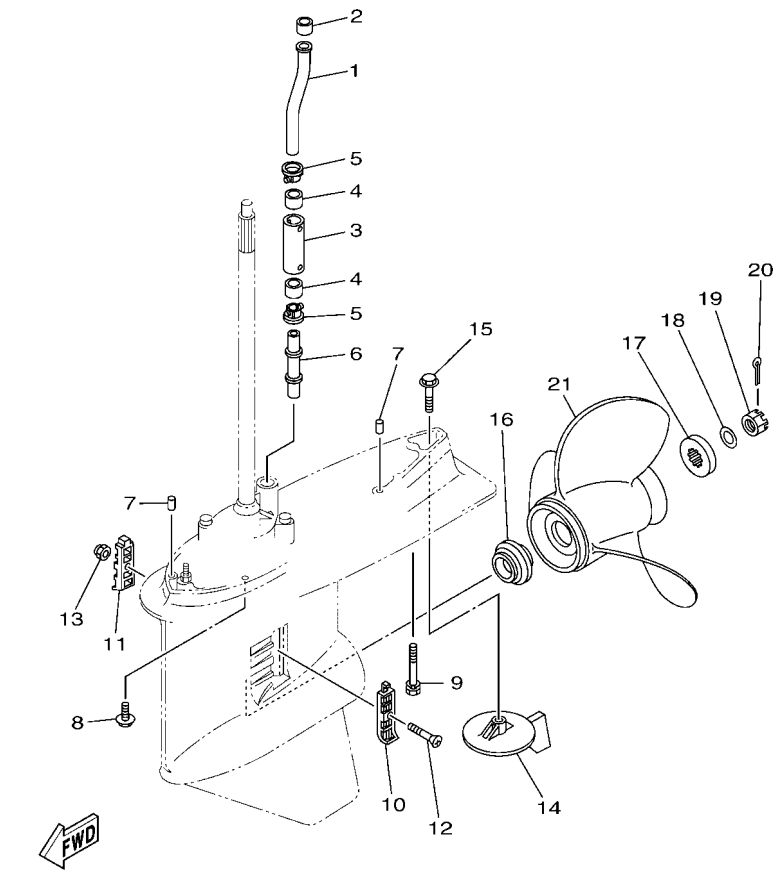

6BMA200-R300

REF. NO.	PART NO. CODIGO Nº	DESCRIPTION DESCRIPCION	6BME	6BNE				REMARKS OBSERVACIONES
1	63P–44361–00	TUBE, WATER 1 TUBO DE AGUA 1	1					
2	6E5–44365–01	DAMPER, WATER SEAL 1 HULE DE SELLO DE AGUA 1	1					
3	63P–44362–00	TUBE, WATER 2 TUBO DE AGUA 2	1					X(25.3") X(25.3")
4	6E5–44365–01	DAMPER, WATER SEAL 1 HULE DE SELLO DE AGUA 1	2					X(25.3") X(25.3")
5	6E5–44312–00	COVER, WATER PUMP HOUSING CUBIERTA CAJA BOMBA DE AGUA	2					X(25.3") X(25.3")
6	63P–44363–00	TUBE, WATER 3 TUBO DE AGUA 3	1					X(25.3") X(25.3")
7	93608–16M16	PIN, DOWEL PASADOR DE CLAVIJA	2					
8	97E95–10645	BOLT, HEXAGON W/W DEEP RECESS TORNILLO HEXAGONAL CON RONDONA	6					
9	90119–10008	BOLT, WITH WASHER TORNILLO CON ARANDELA	1					X(25.3") X(25.3")
10	6J9–45214–00	COVER, WATER INLET 1 CUBIERTA, ENTRADA AGUA 1	1					
11	6J9–45215–00	COVER, WATER INLET 2 CUBIERTA, ENTRADA AGUA 2	1					
12	90152–05M08	SCREW, COUNTERSUNK TORNILLO EMBUTIDO	1					
13	90185–05002	NUT, NYLON TUERCA AUTOBLOCANTE	1					
14	6J9–45371–01	TAB-TRIM QUILLA ESTABILIZADOR	1					
15	90105–10M00	BOLT, FLANGE TORNILLO	1					
16	63P–45987–00	SPACER 1 ESPACIADOR 1	1					
17	688–45997–01	SPACER 2 ESPACIADOR 2	1					
18	92990–18200	WASHER ARANDELA PLANA	1					
19	90171–18M04	NUT, CASTLE TUERCA ENTALLADA	1					
20	91490–40030	PIN. COTTER CHAVETA	1					
21	6G5–45970–02	PROPELLER (3X15-1/4"X15"-M) PROPELA (3X15-1/4"X15"-M)	1					UR UR
	6G5–45978–03	PROPELLER (3X13-3/4"X17"-M2) PROPELA (3X13-3/4"X17"-M2)	1					UR UR

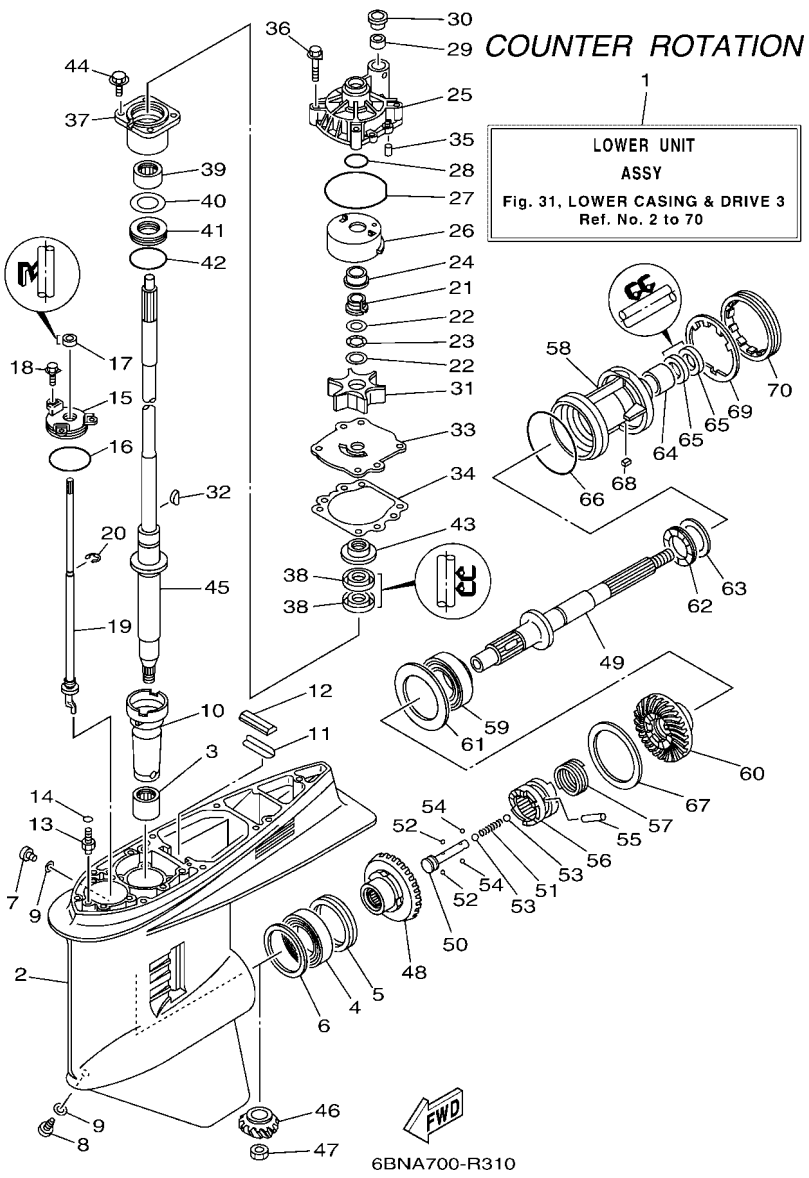

FIG. 31 LOWER CASING & DRIVE 3 — IMPULSOR E INFERIOR 3

REF. NO.	PART NO. CODIGO Nº	DESCRIPTION DESCRIPCION	6BME	6BNE				REMARKS OBSERVACIONES
1	6BN–45300–15–8D	LOWER UNIT ASSY CONJUNTO UNIDAD INFERIOR		1				X(25.3"),LH X(25.3"),LH
2	6BM–45301–01–8D	CASING, LOWER FUNDA INFERIOR COMPLETA		1				
3	93311–928U5	BEARING COJINETE DE RODILLOS		1				
4	93390–000U2	BEARING COJINETE DE RODILLOS		1				
5	93341–465U4	BEARING COJINETES CON RODAMIENTOS		1				
6	6G5–45567–01	SHIM (T:0.10MM) LAINA (T:0.10MM)		1				UR UR
	6G5–45567–10	SHIM (T:0.12MM) LAINA (T:0.12MM)		1				UR UR
	6G5–45567–20	SHIM (T:0.15MM) LAINA (T:0.15MM)		1				UR UR
	6G5–45567–30	SHIM (T:0.18MM) LAINA (T:0.18MM)		1				UR UR
	6G5–45567–40	SHIM (T:0.30MM) LAINA (T:0.30MM)		1				UR UR
	6G5–45567–50	SHIM (T:0.40MM) LAINA (T:0.40MM)		1				UR UR
	6G5–45567–60	SHIM (T:0.50MM) LAINA (T:0.50MM)		1				UR UR
7	90340–08002	PLUG, STRAIGHT SCREW TORNILLO, DE DRENAJE		1				
8	688–45341–10	PLUG, DRAIN TAPON, DREN		1				
9	90430–08003	GASKET JUNTA		2				
10	6G5–45536–01	SLEEVE, DRIVE SHAFT CAMISA EJE DE MANDO		1				
11	663–45376–00	GUIDE, SEAL DAMPER GUIA DE SELLO GOMA		1				
12	688–45375–00	DAMPER, SEAL GOMA DE SELLO		1				
13	63P–45378–00	NIPPLE, HOSE NIPLE MANGUERA		1				
14	93210–07003	O-RING ANILLO O		1				
15	6E5–45321–00	PLATE PLACA		1				
16	93210–58144	O-RING ANILLO O		1				
17	93106–09014	OIL SEAL SELLO ACEITE		1				
18	90119–06286	BOLT, WITH WASHER TORNILLO CON ARANDELA		3				
19	64P–44150–11	SHIFT CAM ASSY CONJUNTO EJE LEVA COMPL.		1				X(25.3"),LH X(25.3"),LH
20	99001–08600	CIRCLIP PRESILLA REDONDA		1				
21	61A–45538–00	SPACER 1 ESPACIADOR 1		1				

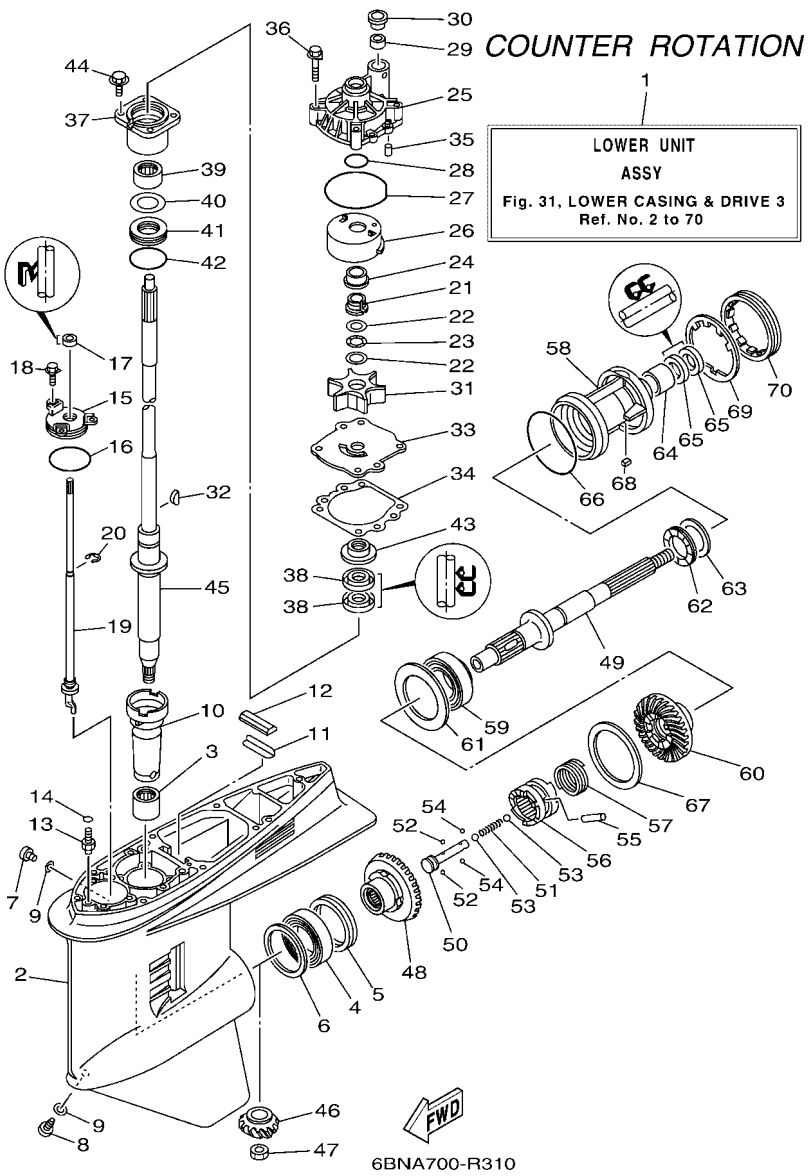

FIG. 31 LOWER CASING & DRIVE 3 — IMPULSOR E INFERIOR 3

REF. NO.	PART NO. CODIGO Nº	DESCRIPTION DESCRIPCION	6BME	6BNE				REMARKS OBSERVACIONES
22	90201–22M01	WASHER, PLATE ARANDELA PLANA		2				
23	90206–22M19	WASHER, WAVE ARANDELA ONDULADA		1				
24	61A–45527–00	COLLAR, DRIVE SHAFT COLLAR EJE FLECHA DE PROPULSIO		1				
25	61A–44311–01	HOUSING, WATER PUMP CAJA BOMBA DE AGUA		1				
26	6R3–44322–42	INSERT, CARTRIDGE CARTUCHO		1				FOR CHROMATE FOR CHROMATE
27	93210–86M38	O-RING ANILLO O		1				
28	93210–37160	O-RING ANILLO O		1				
29	6E5–44365–01	DAMPER, WATER SEAL 1 HULE DE SELLO DE AGUA 1		1				
30	6E5–44312–00	COVER, WATER PUMP HOUSING CUBIERTA CAJA BOMBA DE AGUA		1				
31	6E5–44352–01	IMPELLER IMPULSOR		1				
32	90280–04M05	KEY, WOODRUFF CUNA WOODRUFF		1				
33	6G5–44323–41	OUTER PLATE, CARTRIDGE PLACA EXTERIOR DEL CARTUCHO		1				FOR CHROMATE FOR CHROMATE
34	6E5–44315–A0	GASKET, WATER PUMP EMPAQUE		1				
35	93606–12019	PIN, DOWEL PASADOR DE CLAVIJA		2				
36	90119–08191	BOLT, WITH WASHER TORNILLO CON ARANDELA		4				
37	6E5–45331–00–9S	HOUSING, BEARING CAJA DE COJINETE		1				
38	93101–28M16	OIL SEAL SELLO ACEITE		2				
39	93317–330U2	BEARING COJINETE		1				
40	6E5–45587–01	SHIM (T:0.10MM) LAINA (T:0.10MM)		1				UR UR
	6E5–45587–10	SHIM (T:0.12MM) LAINA (T:0.12MM)		1				UR UR
	6E5–45587–20	SHIM (T:0.15MM) LAINA (T:0.15MM)		1				UR UR
	6E5–45587–30	SHIM (T:0.18MM) LAINA (T:0.18MM)		1				UR UR
	6E5–45587–40	SHIM (T:0.30MM) LAINA (T:0.30MM)		1				UR UR
	6E5–45587–50	SHIM (T:0.40MM) LAINA (T:0.40MM)		1				UR UR
	6E5–45587–60	SHIM (T:0.50MM) LAINA (T:0.50MM)		1				UR UR
41	93341–930V2	BEARING COJINETES CON RODAMIENTOS		1				
42	93210–55M14	O-RING ANILLO O		1				

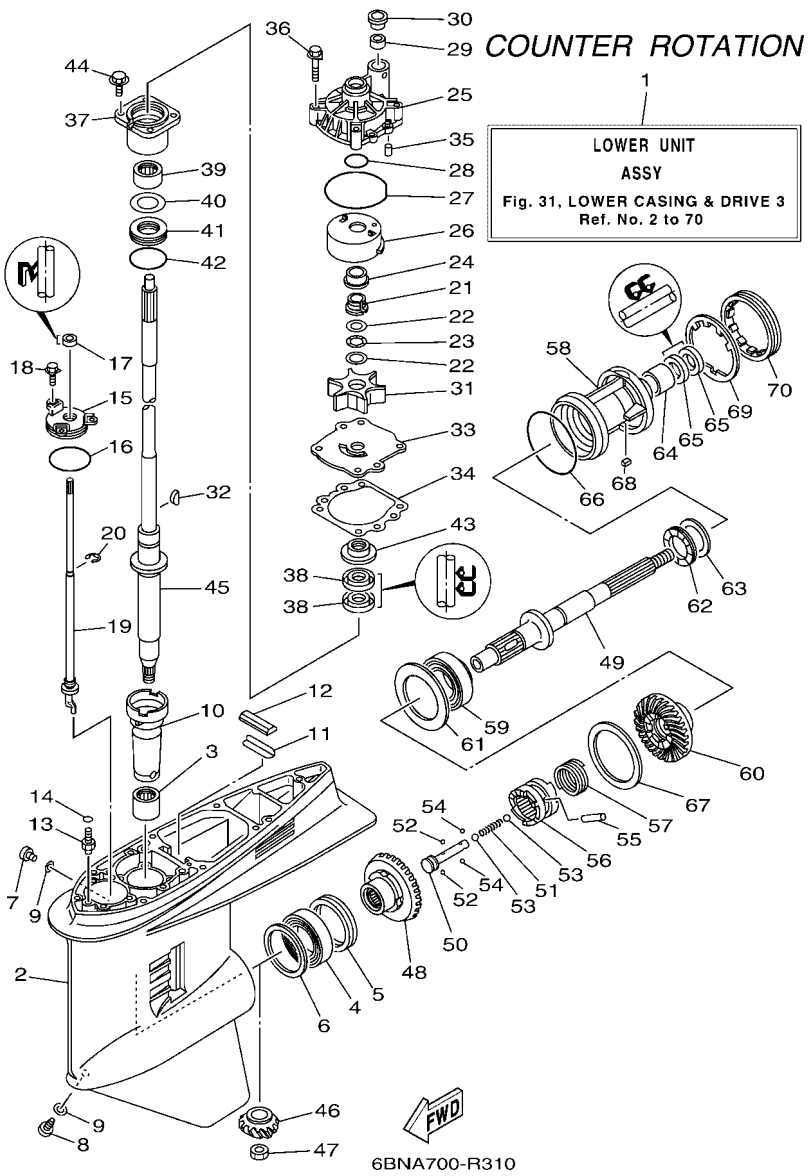

FIG. 31 LOWER CASING & DRIVE 3 — IMPULSOR E INFERIOR 3

REF. NO.	PART NO. CODIGO Nº	DESCRIPTION DESCRIPCION	6BME	6BNE				REMARKS OBSERVACIONES
43	6E5–45344–00	COVER, OIL SEAL CUBIERTA SELLO ACEITE		1				
44	97E95–08525	BOLT, HEXAGON W/W DEEP RECESS TORNILLO HEXAGONAL CON RONDONA		4				
45	63P–45501–11	DRIVE SHAFT COMP. EJE DE MANDO COMPL.		1				X(25.3") X(25.3")
46	63P–45551–00	PINION (14T) PINON (14T)		1				
47	90170–16M01	NUT TUERCA		1				
48	64P–45560–10	GEAR 1 (28T) ENGRANAJE 1 (28T)		1				
49	6K1–45611–11	SHAFT, PROPELLER EJE PROPUSOR		1				
50	6E5–45634–02	SLIDE, SHIFT DESLIZADOR, CAMBIO		1				
51	90501–16M37	SPRING, COMPRESSION RESORTE DE COMPRESION		1				
52	93507–32009	BALL ESFERA		2				
53	93511–32017	BALL ESFERA		2				
54	93503–16003	BALL ESFERA		2				
55	90250–08M07	PIN, STRAIGHT PASADOR CILINDRICO		1				
56	6DA–45631–01	CLUTCH, DOG EMBRAGUE DE GARRA		1				
57	6E5–45633–01	RING, CROSS PIN ANILLO DE PASADOR		1				
58	6BN–45332–00–9S	HOUSING, BEARING CAJA BALERO 2		1				
59	93332–00048	BEARING COJINETE		1				
60	64P–45570–10	GEAR 2 (28T) ENGRANAJE 2 (28T)		1				
61	6K1–45576–00	WASHER, THRUST 2 ARANDELA DE EMPUJE AXIAL 2		1				
62	93341–440U5	BEARING COJINETES CON RODAMIENTOS		1				
63	6K1–45578–01	SHIM (T:0.10MM) LAINA (T:0.10MM)		1				UR UR
	6K1–45578–10	SHIM (T:0.12MM) LAINA (:0.12MM)		1				UR UR
	6K1–45578–20	SHIM (T:0.15MM) LAINA (T:0.15MM)		1				UR UR
	6K1–45578–30	SHIM (T:0.18MM) LAINA (T:0.18MM)		1				UR UR
	6K1–45578–40	SHIM (T:0.30MM) LAINA (T:0.30MM)		1				UR UR
	6K1–45578–50	SHIM (T:0.40MM) LAINA (T:0.40MM)		1				UR UR
	6K1–45578–60	SHIM (T:0.50MM) LAINA (T:0.50MM)		1				UR UR

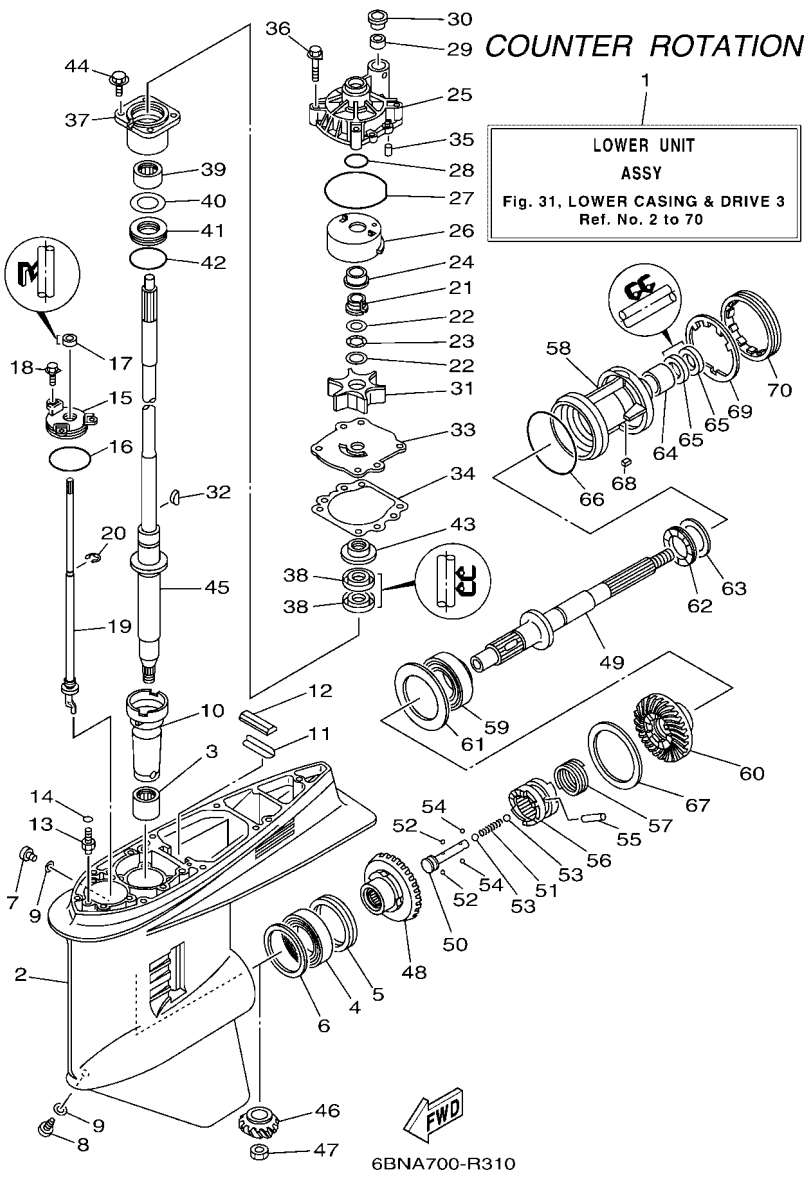

FIG. 31 LOWER CASING & DRIVE 3 — IMPULSOR E INFERIOR 3

REF. NO.	PART NO. CODIGO Nº	DESCRIPTION DESCRIPCION	6BME	6BNE				REMARKS OBSERVACIONES
64	93315–43061	BEARING COJINETE DE RODILLOS		1				
65	93101–30M17	OIL SEAL SELLO ACEITE		2				
66	93210–97M55	O-RING ANILLO O		1				
67	6G5–45577–02	SHIM (T:0.10MM) LAINA (T:0.10MM)		1				UR UR
	6G5–45577–10	SHIM (T:0.12MM) LAINA (T:0.12MM)		1				UR UR
	6G5–45577–20	SHIM (T:0.15MM) LAINA (T:0.15MM)		1				UR UR
	6G5–45577–30	SHIM (T:0.18MM) LAINA (T:0.18MM)		1				UR UR
	6G5–45577–40	SHIM (T:0.30MM) LAINA (T:0.30MM)		1				UR UR
	6G5–45577–50	SHIM (T:0.40MM) LAINA (T:0.40MM)		1				UR UR
	6G5–45577–60	SHIM (T:0.50MM) LAINA (T:0.50MM)		1				UR UR
68	90282–04M00	KEY, STRAIGHT CHAVETA, RECTA		1				
69	6G5–45383–01	WASHER, CLAW ARANDELA DE UNA		1				
70	6G5–45384–02	NUT TUERCA		1				

FIG. 32 LOWER CASING & DRIVE 4 — IMPULSOR E INFERIOR 4

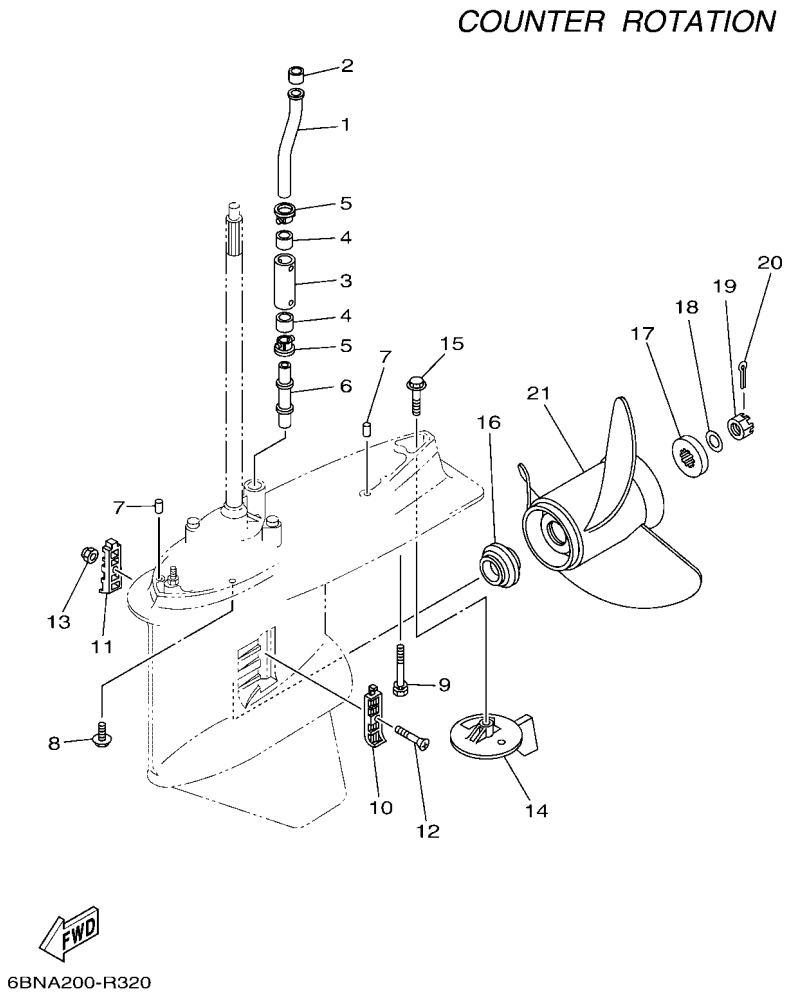

REF. NO.	PART NO. CODIGO Nº	DESCRIPTION DESCRIPCION	6BME	6BNE				REMARKS OBSERVACIONES
1	63P–44361–00	TUBE, WATER 1 TUBO DE AGUA 1		1				
2	6E5–44365–01	DAMPER, WATER SEAL 1 HULE DE SELLO DE AGUA 1		1				
3	63P–44362–00	TUBE, WATER 2 TUBO DE AGUA 2		1				X(25.3") X(25.3")
4	6E5–44365–01	DAMPER, WATER SEAL 1 HULE DE SELLO DE AGUA 1		2				X(25.3") X(25.3")
5	6E5–44312–00	COVER, WATER PUMP HOUSING CUBIERTA CAJA BOMBA DE AGUA		2				X(25.3") X(25.3")
6	63P–44363–00	TUBE, WATER 3 TUBO DE AGUA 3		1				X(25.3") X(25.3")
7	93608–16M16	PIN, DOWEL PASADOR DE CLAVIJA		2				
8	97E95–10645	BOLT, HEXAGON W/W DEEP RECESS TORNILLO HEXAGONAL CON RONDONA		6				
9	90119–10008	BOLT, WITH WASHER TORNILLO CON ARANDELA		1				X(25.3") X(25.3")
10	6J9–45214–00	COVER, WATER INLET 1 CUBIERTA, ENTRADA AGUA 1		1				
11	6J9–45215–00	COVER, WATER INLET 2 CUBIERTA, ENTRADA AGUA 2		1				
12	90152–05M08	SCREW, COUNTERSUNK TORNILLO EMBUTIDO		1				
13	90185–05002	NUT, NYLON TUERCA AUTOBLOCANTE		1				
14	6K1–45371–02	TAB-TRIM QUILLA ESTABILIZADOR		1				
15	90105–10M00	BOLT, FLANGE TORNILLO		1				
16	63P–45987–00	SPACER 1 ESPACIADOR 1		1				
17	688–45997–01	SPACER 2 ESPACIADOR 2		1				
18	92990–18200	WASHER ARANDELA PLANA		1				
19	90171–18M04	NUT, CASTLE TUERCA ENTALLADA		1				
20	91490–40030	PIN. COTTER CHAVETA		1				
21	6K1–45978–02	PROPELLER (3X13-3/4"X17"-ML1) PROPELA (3X13-3/4"X17"-ML1)		1				

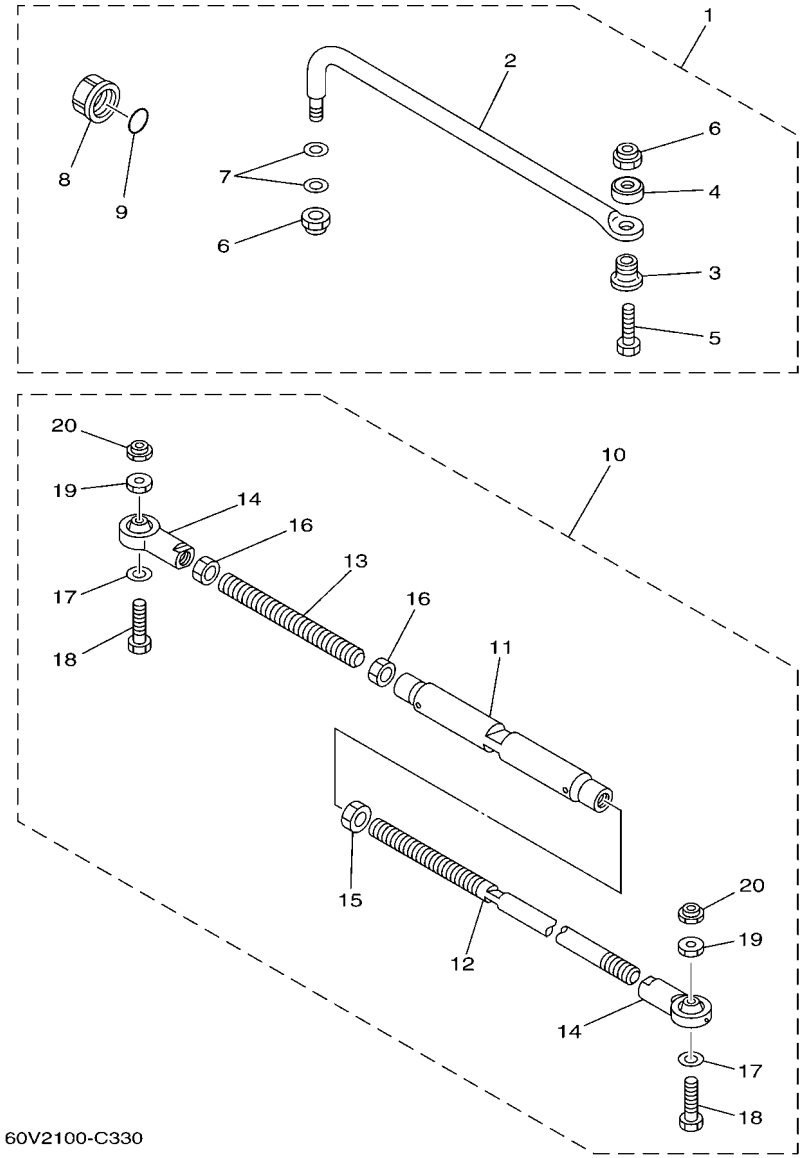

FIG. 33 STEERING GUIDE — DIRECCIONGUIAR

REF. NO.	PART NO. CODIGO Nº	DESCRIPTION DESCRIPCION	6BME	6BNE				REMARKS OBSERVACIONES
1	6E5–61350–02	STEERING GUIDE ATTACHMENT KIT ESTUCHE ADITAMENTO GUIA DE TIM	1					AP EXCEPT CAR,NME AP EXCEPT CAR,NME
2	6E5–61351–01	.ROD, STEERING LINK .VARILLA ESLABON DIRECCION	1					
3	90387–10M61	.COLLAR .ESPACIADOR	1					
4	90560–12M01	.SPACER .SEPARADOR	1					
5	6E5–61355–00	.BOLT .TORNILLO	1					
6	90185–09M01	.NUT, SELF-LOCKING .TUERCA AUTOBLOCANTE	2					
7	90201–10M20	.WASHER, PLATE .ARANDELA PLANA	2					
8	6E5–43145–01	.CAP, CLAMP BRACKET .TAPA	1					
9	93210–16275	.O-RING .ANILLO O	1					
10	6E5–61301–01	TWIN KIT (L:600-800MM) KIT ADITAMENTO (L:600-800MM)		1				AP EXCEPT NME AP EXCEPT NME
11	6E5–61313–00	.ADJUSTER .AJUSTADOR		1				
12	6E5–61311–11	.TIE BAR .BARRA SEPARADORA		1				
13	6E5–61315–00	.TIE BAR .ROTOR DE BOMBA AGUA		1				
14	6E5–61303–01	.STEERING AXLE COMP. .OJO-DIRECCION COMPL.		2				
15	90170–14M06	.NUT .TUERCA		1				
16	95380–14700	.NUT .TUERCA		2				
17	90201–10M76	.WASHER, PLATE .ARANDELA PLANA		2				
18	90101–09M70	.BOLT .TORNILLO		2				
19	90170–09M05	.NUT .TUERCA		2				
20	90185–09M01	.NUT, SELF-LOCKING .TUERCA AUTOBLOCANTE		2				

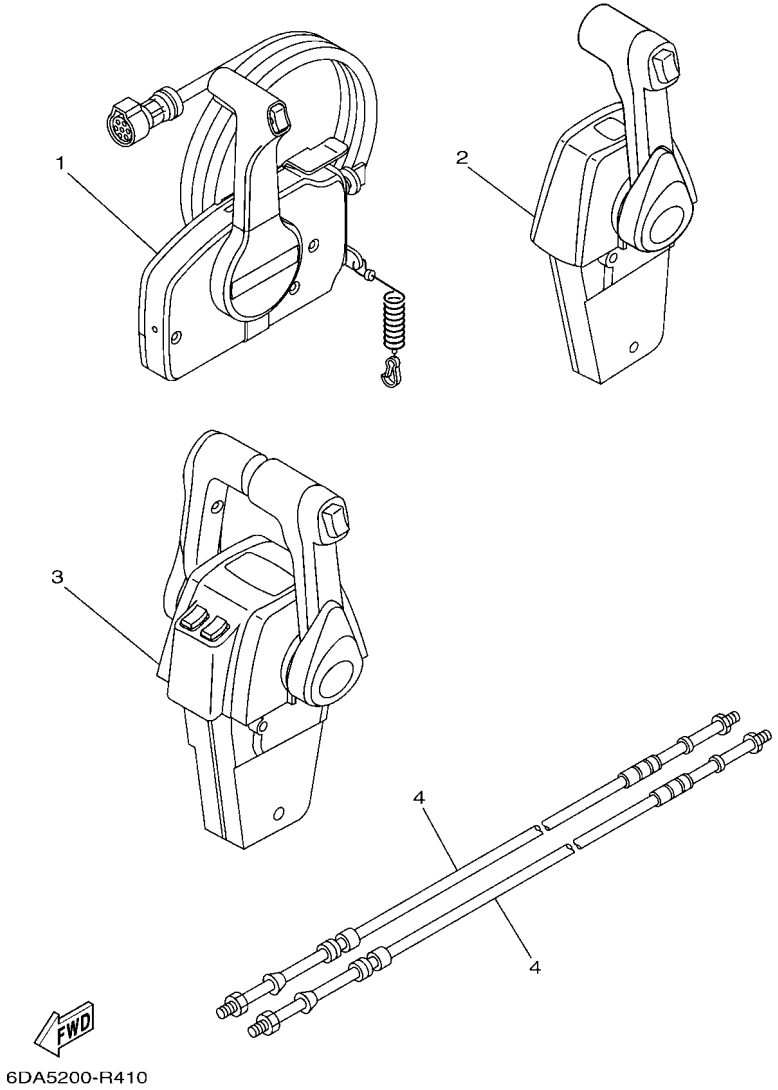

FIG. 34 REMOTE CONTROL BOX — CONTROL REMOTO COMPLETO

REF. NO.	PART NO. CODIGO Nº	DESCRIPTION DESCRIPCION	6BME	6BNE				REMARKS OBSERVACIONES
1	703–48205–23	REMOTE CONTROL ASSY (10P, PTT) REMOTO CONTROL COMPL. (10P)	1					AP AFR WITH PT/T SW. AP AFR WITH PT/T SW.
	703–48207–23	REMOTE CONTROL ASSY (10P, PTT) REMOTO CONTROL COMPL. (10P)	1					AP EXCEPT CAR,NME,AFR AP EXCEPT CAR,NME,AFR
2	704–48205–R1	REMOTE CONTROL ASSY (R/H) REMOTO CONTROL COMPL. (R/H)	1					AP CAR WITH PT/T SW. AP CAR WITH PT/T SW.
3	704–48207–R1	REMOTE CONTROL ASSY REMOTO CONTROL COMPL.		1				AP EXCEPT NME WITH PT/T SW. AP EXCEPT NME WITH PT/T SW.
4	701–48320–50	CABLE, REMOTE CONTROL L=15F CABLE CONTROL REMOTO L=15F	2	2				UR UR
	701–48320–60	CABLE, REMOTE CONTROL L=16F CABLE CONTROL REMOTO L=16F	2	2				UR UR
	701–48320–80	CABLE, REMOTE CONTROL L=17F CABLE CONTROL REMOTO L=17F	2	2				UR UR
	701–48350–00	CABLE, REMOTE CONTROL L=21F CABLE CONTROL REMOTO L=21F	2	2				UR UR
	701–48350–20	CABLE, REMOTE CONTROL L=23F CABLE CONTROL REMOTO L=23F	2	2				UR UR
	701–48350–50	CABLE, REMOTE CONTROL L=26F CABLE CONTROL REMOTO L=26F	2	2				UR UR
	701–48350–80	CABLE, REMOTE CONTROL L=31F CABLE CONTROL REMOTO L=31F	2	2				UR UR

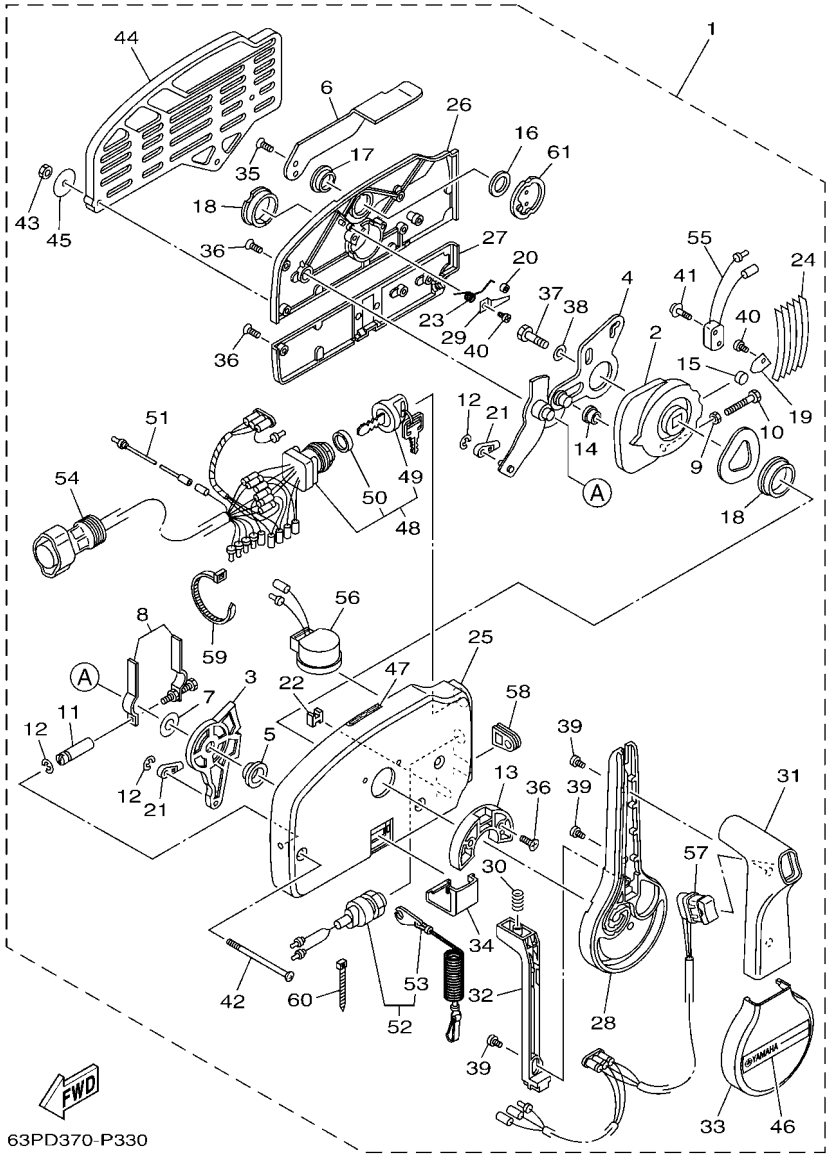

FIG. 35 REMOTE CONTROL ASSY 1 — CONTROL REMOTO COMPL 1

REF. NO.	PART NO. CODIGO Nº	DESCRIPTION DESCRIPCION	6BME	6BNE				REMARKS OBSERVACIONES
1	703–48205–23	REMOTE CONTROL ASSY (10P, PTT) REMOTO CONTROL COMPL. (10P)	1					AP AFR WITH PT/T SW. AP AFR WITH PT/T SW.
	703–48207–23	REMOTE CONTROL ASSY (10P, PTT) REMOTO CONTROL COMPL. (10P)	1					AP EXCEPT CAR,NME,AFR AP EXCEPT CAR,NME,AFR
2	703–48232–00	.GEAR .ENGRANAJE 1	1					
3	703–48271–00	.ARM, SHIFT .BRAZO CAMBIADOR	1					
4	703–48261–01	.ARM, THROTTLE .BRAZO ACELERADOR	1					
5	703–48235–00	.BUSHING .BUJE	1					
6	703–48152–10	.KNOB, FREE ACCEL. .PERILLA	1					
7	703–48268–00	.SPACER .ESPACIADOR 3	1					
8	703–48264–00	.FRICTION, THROTTLE .FRICCION DE ACELERADOR	1					
9	95380–05600	.NUT .TUERCA	1					
10	97380–05025	.BOLT .TORNILLO HEXAGONAL	1					
11	703–48265–10	.SHAFT, FRICTION .EJE FRICCION	1					
12	93430–06024	.CIRCLIP .SEGURO	3					
13	703–48245–00	.PLATE, LOCK .PLACA CERRADURA	1					
14	703–48252–00	.ROLLER, CAM .RODILLO LEVA	1					
15	701–48248–00	.ROLLER, FREE ACCEL. .RODILLO ACELERADOR LIBRE	1					
16	703–48198–00	.WASHER, WAVE .RONDANA ONDULADA 3	1					
17	703–48243–00	.BUSHING .BUJE 3	1					
18	703–48236–00	.BUSHING 1 .BUJE	2					
19	703–48189–00	.RETAINER .RETENEDOR	1					
20	703–48234–00	.ROLLER, DETENT .RODILLO	1					
21	703–48345–01	.CABLE END, REMOTE CONTROL 2 .TERMINAL CABLE DE CONTROL REMO	2					
22	703–48358–01	.ANCHOR, CABLE .ABRAZADERA CABLE	1					
23	703–48244–00	.SPRING, FREE ACCEL. .RESORTE ACELERADOR LIBRE	1					
24	703–48238–00	.SPRING, DETENT .RESORTE	5					
25	703–48211–10	.HOUSING,1 .CAJA	1					
26	703–48212–10	.BACK PLATE 1 .PLACA TRASERA 1	1					

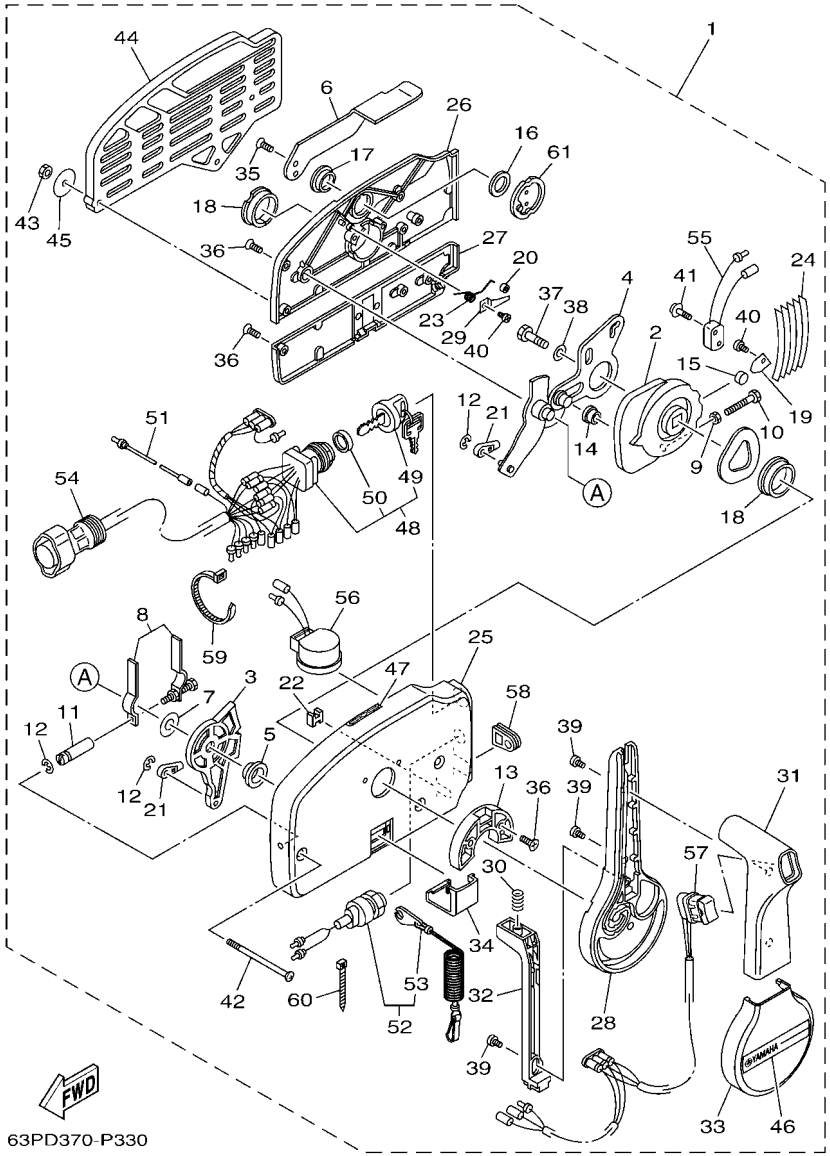

FIG. 35 REMOTE CONTROL ASSY 1 — CONTROL REMOTO COMPL 1

REF. NO.	PART NO. CODIGO Nº	DESCRIPTION DESCRIPCION	6BME	6BNE				REMARKS OBSERVACIONES
27	703–48213–10	.BACK PLATE 2 .PLACA TRASERA 2	1					
28	703–48221–10	.LEVER, CONTROL .PALANCA CONTROL	1					
29	703–48246–00	.SPACER .ESPACIADOR	1					
30	703–48227–00	.SPRING, NEUTRAL LOCK .RESORTE DE SEGURO	1					
31	703–48222–20	.GRIP, CONTROL LEVER .MANGO DE PALANCA CONTROL	1					SINGLE SINGLE
32	703–48223–10	.LOCK, NEUTRAL .CERRADURA NEUTRO	1					
33	703–48225–10	.COVER .CUBIERTA	1					
34	703–48219–10	.COVER, LEAD .CUBIERTA	1					
35	703–48281–00	.SCREW .TORNILLO 1	2					
36	703–44189–20	.SCREW .TORNILLO	7					
37	97380–08030	.BOLT .TORNILLO HEXAGONAL	1					
38	92990–08600	.WASHER, PLATE .ARANDELA PLANA	1					
39	703–48128–10	.SCREW 2 .TORNILLO 2	3					
40	98580–04006	.SCREW, PAN HEAD .TORNILLO DE CABEZA CRUZADA	2					
41	703–48129–00	.SCREW 3 .TORNILLO 3	2					
42	703–44189–30	.SCREW .TORNILLO	3					
43	95380–06600	.NUT, HEXAGON .TUERCA	3					
44	703–48293–10	.SPACER, REMOTE CONTROL .ESPACIADOR	1					SINGLE SINGLE
45	701–48287–00	.WASHER .ARANDELA	3					
46	703–48215–11	.GRAPHIC .CALCOMANIA 1	1					
47	6X3–44191–00	.INDICATOR, SHIFT .INDICADOR DE CAMBIOS	1					
48	703–82510–45	.MAIN SWITCH ASSY .CONJUNTO DE LLAVE IGNICION	1					
49	703–82577–00	..CAP, KEY ..TAPA	1					
50	6K1–82532–00	..CAP ..TAPA	1					
51	703–82531–00	.WIRE, LEAD (L70) .CABLE CONDUCTOR (L70)	1					
52	688–82575–02	.ENGINE STOP SWITCH ASSY .INTERRUPTOR DE PARADA COMPL	1					
53	682–82556–00	..LANYARD, STOP SWITCH ..CORDON DE INTERRUPTOR PARADA	1					

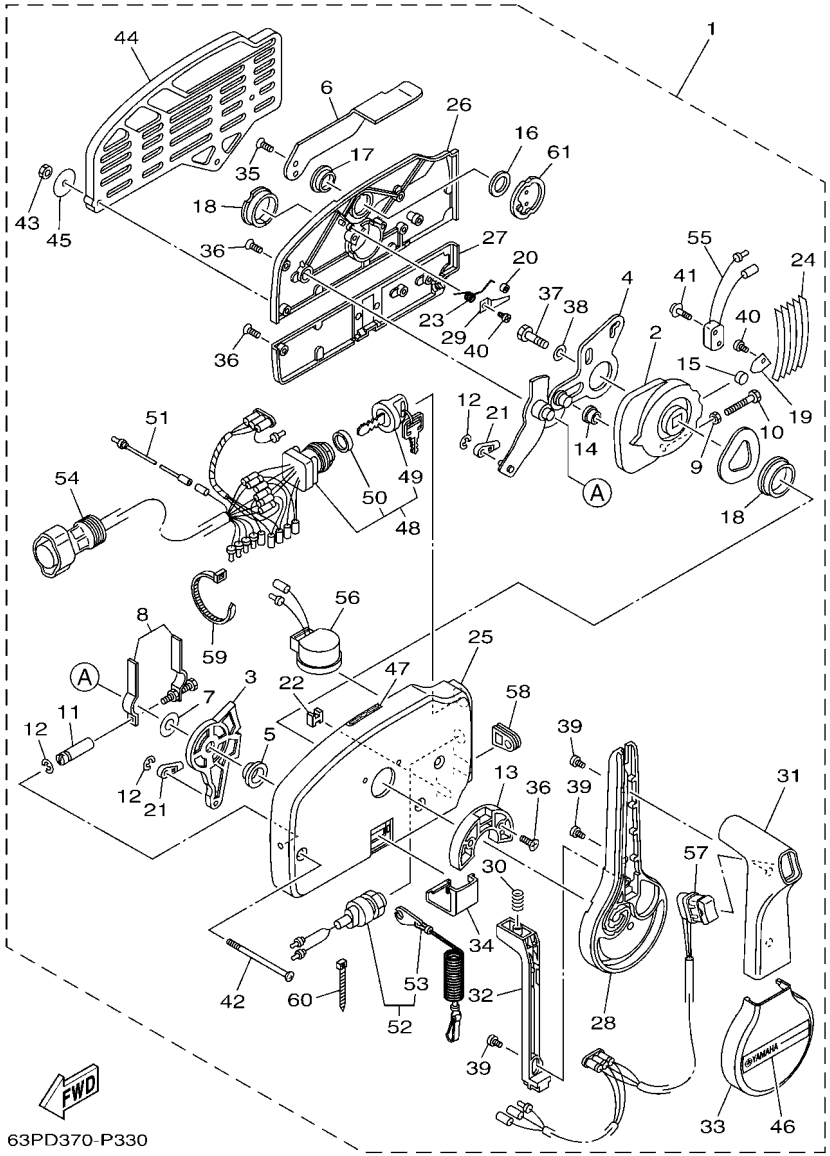

FIG. 35 REMOTE CONTROL ASSY 1 — CONTROL REMOTO COMPL 1

REF. NO.	PART NO. CODIGO Nº	DESCRIPTION DESCRIPCION	6BME	6BNE				REMARKS OBSERVACIONES
54	688–8258A–20	.EXTENSION, WIRE HARNESS (4.9M) .EXTENSION, ARNES DE CABLES (4.	1					(10P) (10P)
55	703–82540–00	.NEUTRAL SWITCH ASSY .INTERRUPTOR NEUTRAL COMPL	1					
56	703–83383–11	.BUZZER .ZUMBADOR	1					
57	703–82563–31	.TRIM & TILT SWITCH ASSY .INTERRUPTOR DE INCLINACION	1					FOR 703-48205-23 FOR 703-48205-23
	703–82563–21	.TRIM & TILT SWITCH ASSY .INTERRUPTOR DE INCLINACION	1					FOR 703-48207-23 FOR 703-48207-23
58	703–48284–00	.GROMMET .TAPON	1					FOR 703-48205-23 FOR 703-48205-23
	703–48284–10	.GROMMET .TAPON	1					FOR 703-48207-23 FOR 703-48207-23
59	703–82591–00	.BAND .BANDA	1					
60	703–82592–00	.BAND .BANDA	1					
61	703–48153–00	.SHAFT, FREE ACCEL. .EJE	1					

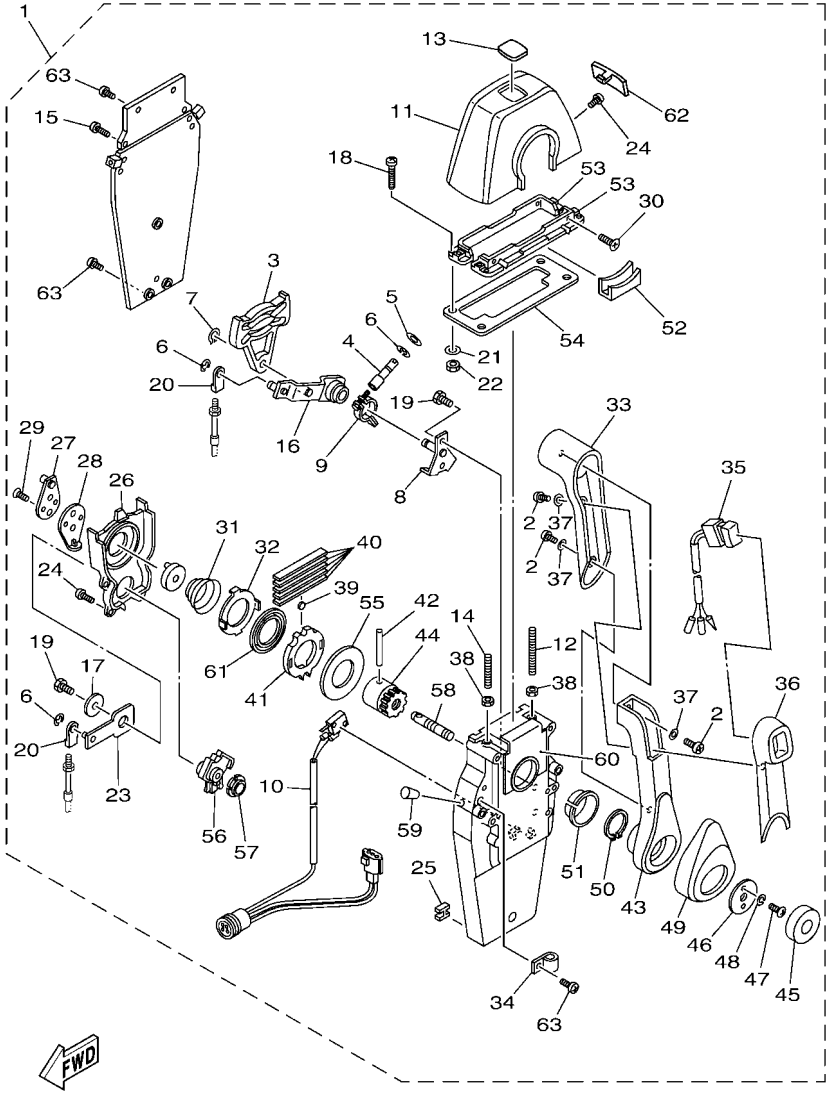

6DA5200-R430

FIG. 36 REMOTE CONTROL ASSY 2 — CONTROL REMOTO COMPL 2

REF. NO.	PART NO. CODIGO Nº	DESCRIPTION DESCRIPCION	6BME	6BNE				REMARKS OBSERVACIONES
1	704–48205–R1	REMOTE CONTROL ASSY (R/H) REMOTO CONTROL COMPL. (R/H)	1					AP CAR WITH PT/T SW. AP CAR WITH PT/T SW.
2	704–48129–11	.SCREW 3 .TORNILLO 3	3					
3	EL8–48251–00	.PLATE, CAM .PLACA,LEVA	1					
4	704–48265–00	.SHAFT, FRICTION .EJE FRICCION	1					
5	701–48246–00	.SPACER .ESPACIADOR	1					
6	93430–06024	.CIRCLIP .SEGURO	4					
7	EL8–48259–00	.CIRCLIP 1 .SEGURO	1					
8	704–48262–00	.SHAFT, THROTTLE .EJE DE ACELERADOR	1					
9	704–48264–00	.THROTTLE, FRICTION .FRICCION DE ACELERADOR	1					
10	704–82540–40	.NEUTRAL SWITCH ASSY .INTERRUPTOR NEUTRAL COMPL	1					
11	704–48119–50	.COVER .CUBIERTA	1					
12	EL8–48281–00	.SCREW .TORNILLO 1	1					
13	704–48215–60	.GRAPHIC .CALCOMANIA 1	1					
14	704–48281–00	.SCREW .TORNILLO 1	1					
15	97890–05025	.SCREW, PAN HEAD .TORNILLO	2					
16	704–48261–00	.ARM, THROTTLE .BRAZO ACELERADOR	1					
17	EL8–48191–00	.WASHER 1 .ARANDELA	1					
18	704–48283–00	.SCREW .TORNILLO 3	4					
19	97380–06018	.BOLT .TORNILLO HEXAGONAL	3					
20	703–48345–01	.CABLE END, REMOTE CONTROL 2 .TERMINAL CABLE DE CONTROL REMO	2					
21	704–48287–00	.WASHER .ARANDELA	4					
22	95380–05600	.NUT .TUERCA	4					
23	704–48271–00	.ARM, SHIFT .BRAZO CAMBIADOR	1					
24	EL8–48127–00	.SCREW 1 .TORNILLO 1	10					
25	703–48358–01	.ANCHOR, CABLE .ABRAZADERA CABLE	1					
26	704–48231–00	.HOUSING, GEAR .CAJA,ENGRANAJE	1					
27	EL8–48241–00	.ARM, DRIVE .BRAZO,MANDO	1					

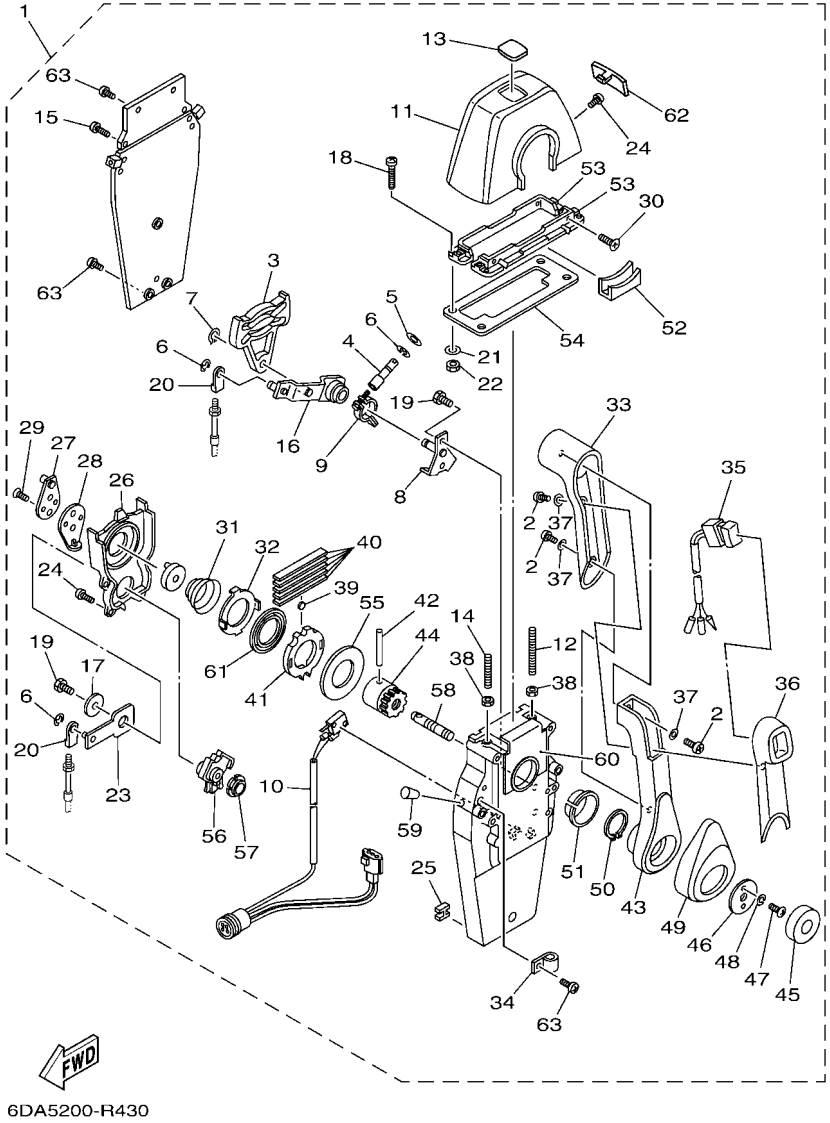

FIG. 36 REMOTE CONTROL ASSY 2 — CONTROL REMOTO COMPL 2

REF. NO.	PART NO. CODIGO Nº	DESCRIPTION DESCRIPCION	6BME	6BNE				REMARKS OBSERVACIONES
28	EL8–48254–00	.STOPPER, THROTTLE ADJUSTING .TAPON	1					
29	92780–06020	.SCREW, FLAT HEAD .TORNILLO CABEZA PLANA	2					
30	98780–05018	.SCREW, FLAT HEAD .TORNILLO, CABEZA PLANA	4					
31	EL8–48244–00	.SPRING, FREE ACCEL. .RESORTE ACELERADOR LIBRE	1					
32	EL8–48245–00	.PLATE, LOCK .PLACA CERRADURA	1					
33	704–48222–10	.GRIP, CONTROL LEVER .MANGO DE PALANCA CONTROL	1					
34	704–82594–00	.CLAMP .GRAMPA	1					
35	704–82563–60	.TRIM & TILT SWITCH ASSY .INTERRUPTOR DE INCLINACION	1					
36	704–48229–30	.GRIP, CONTROL LEVER .MANGO DE PALANCA CONTROL 2	1					
37	92990–05300	.WASHER, INTERNAL TOOTH .ARANDELA PLANA	3					
38	95380–06600	.NUT, HEXAGON .TUERCA	2					
39	701–48248–00	.ROLLER, FREE ACCEL. .RODILLO ACELERADOR LIBRE	1					
40	704–48238–00	.SPRING, DETENT .RESORTE	5					
41	704–48232–P1	.GEAR .ENGRANAJE 1	1					
42	EL8–48164–00	.PIN 2 .PASADOR 2	1					
43	704–48221–R0	.LEVER, CONTROL .PALANCA CONTROL	1					
44	704–48242–10	.SHAFT, DRIVE .EJE, PROPULSION	1					
45	704–48225–R0	.COVER .CUBIERTA	1					
46	704–48192–00	.WASHER 2 .RONDANA 2	1					
47	97890–06018	.SCREW, PAN HEAD .TORNILLO	2					
48	92990–06300	.WASHER, INTERNAL TOOTH .ARANDELA PLANA	2					
49	704–48224–R0	.COVER, CONTROL LEVER .CUBIERTA DE PALANCA CONTROL	1					
50	EL8–48279–00	.CIRCLIP 2 .SEGURO2	1					
51	704–48234–00	.BUSHING 1 .BUJE	1					
52	704–48219–R0	.COVER, LEAD .CUBIERTA	1					
53	704–48144–10	.PLATE, STOPPER 2 .PLACA, RETEN 2	2					
54	704–48176–00	.GROMMET .TOPON	1					

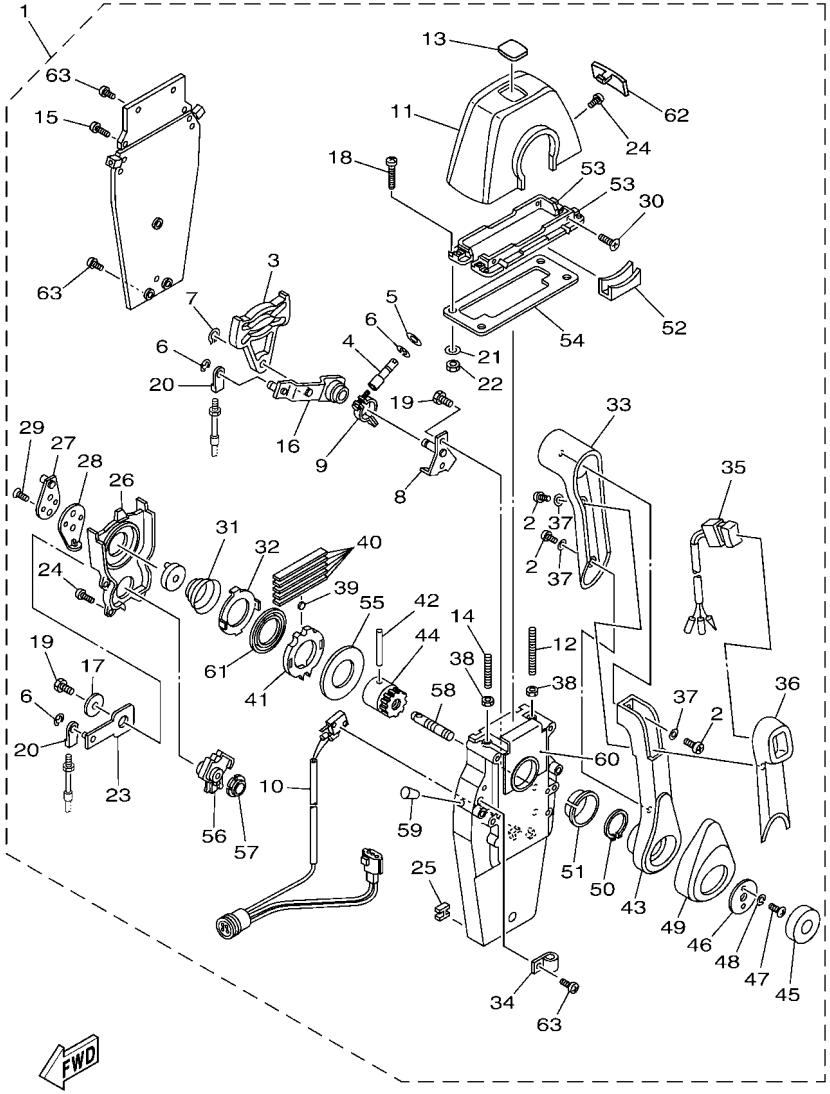

6DA5200-R430

FIG. 36 REMOTE CONTROL ASSY 2 — CONTROL REMOTO COMPL 2

REF. NO.	PART NO. CODIGO Nº	DESCRIPTION DESCRIPCION	6BME	6BNE				REMARKS OBSERVACIONES
55	704–48192–P0	.WASHER 2 .RONDANA 2	1					
56	704–48233–00	.GEAR 2 .ENGRANAJE 2	1					
57	704–48235–00	.BUSHING .BUJE	1					
58	704–48153–00	.SHAFT, FREE ACCEL. .EJE	1					
59	704–48166–00	.PLUG .TAPON	1					
60	704–48284–P0	.GROMMET .TAPON	1					
61	704–48178–10	.PLATE, SHIFT .PLACA	1					
62	704–48167–20	.PLUG .TAPON AGUJERO	1					
63	97890–05016	.SCREW, PAN HEAD .TORNILLO	3					

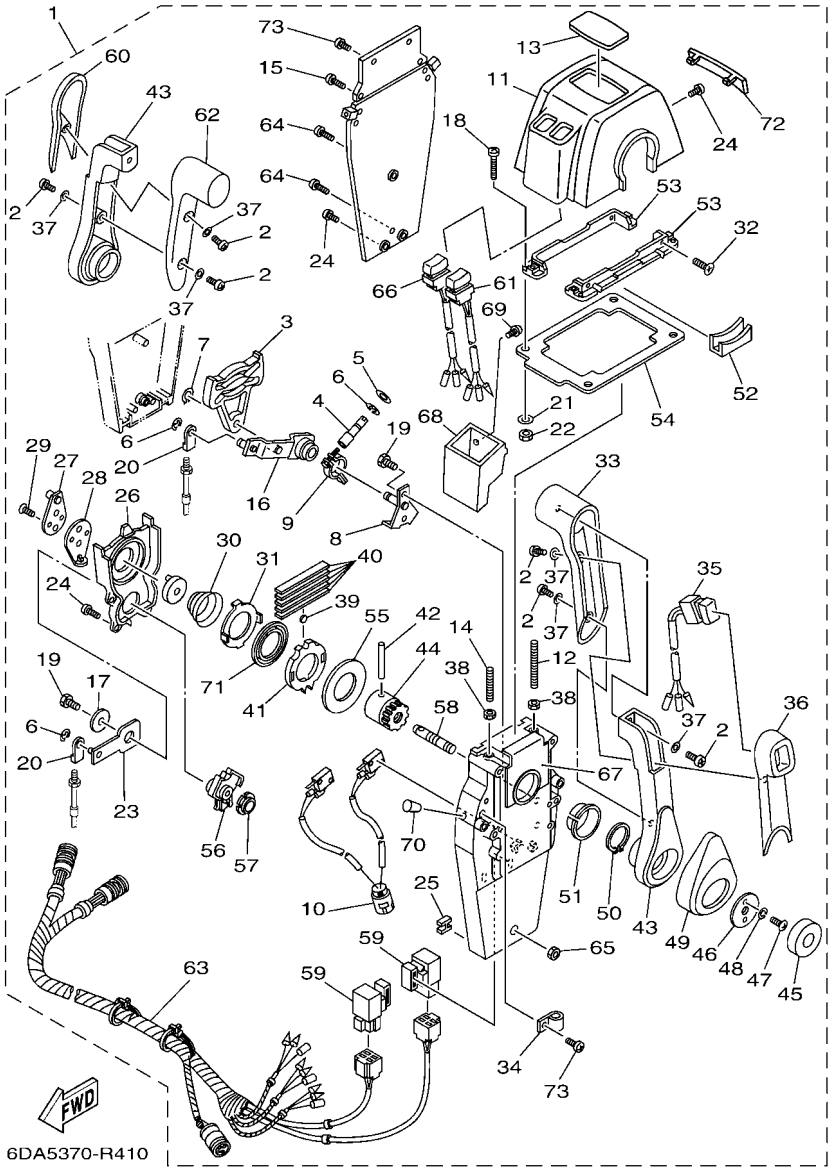

FIG. 37 REMOTE CONTROL ASSY 3 — CONTROL REMOTO COMPL 3

REF. NO.	PART NO. CODIGO Nº	DESCRIPTION DESCRIPCION	6BME	6BNE				REMARKS OBSERVACIONES
1	704–48207–R1	REMOTE CONTROL ASSY REMOTO CONTROL COMPL.		1				AP EXCEPT NME WITH PT/T SW. AP EXCEPT NME WITH PT/T SW.
2	704–48129–11	.SCREW 3 .TORNILLO 3		6				
3	EL8–48251–00	.PLATE, CAM .PLACA,LEVA		2				
4	704–48265–00	.SHAFT, FRICTION .EJE FRICCION		2				
5	701–48246–00	.SPACER .ESPACIADOR		2				
6	93430–06024	.CIRCLIP .SEGURO		8				
7	EL8–48259–00	.CIRCLIP 1 .SEGURO		2				
8	704–48262–00	.SHAFT, THROTTLE .EJE DE ACELERADOR		2				
9	704–48264–00	.THROTTLE, FRICTION .FRICCION DE ACELERADOR		2				
10	704–82540–30	.NEUTRAL SWITCH ASSY .INTERRUPTOR NEUTRAL COMPL		1				
11	704–48119–60	.COVER .CUBIERTA		1				
12	EL8–48281–00	.SCREW .TORNILLO 1		2				
13	704–48215–70	.GRAPHIC .CALCOMANIA 1		1				
14	704–48281–00	.SCREW .TORNILLO 1		2				
15	97890–05025	.SCREW, PAN HEAD .TORNILLO		4				
16	704–48261–00	.ARM, THROTTLE .BRAZO ACELERADOR		2				
17	EL8–48191–00	.WASHER 1 .ARANDELA		2				
18	704–48283–00	.SCREW .TORNILLO 3		4				
19	97380–06018	.BOLT .TORNILLO HEXAGONAL		6				
20	703–48345–01	.CABLE END, REMOTE CONTROL 2 .TERMINAL CABLE DE CONTROL REMO		4				
21	704–48287–00	.WASHER .ARANDELA		4				
22	95380–05600	.NUT .TUERCA		4				
23	704–48271–00	.ARM, SHIFT .BRAZO CAMBIADOR		2				
24	EL8–48127–00	.SCREW 1 .TORNILLO 1		18				
25	703–48358–01	.ANCHOR, CABLE .ABRAZADERA CABLE		2				
26	704–48231–00	.HOUSING, GEAR .CAJA,ENGRANAJE		2				
27	EL8–48241–00	.ARM, DRIVE .BRAZO,MANDO		2				

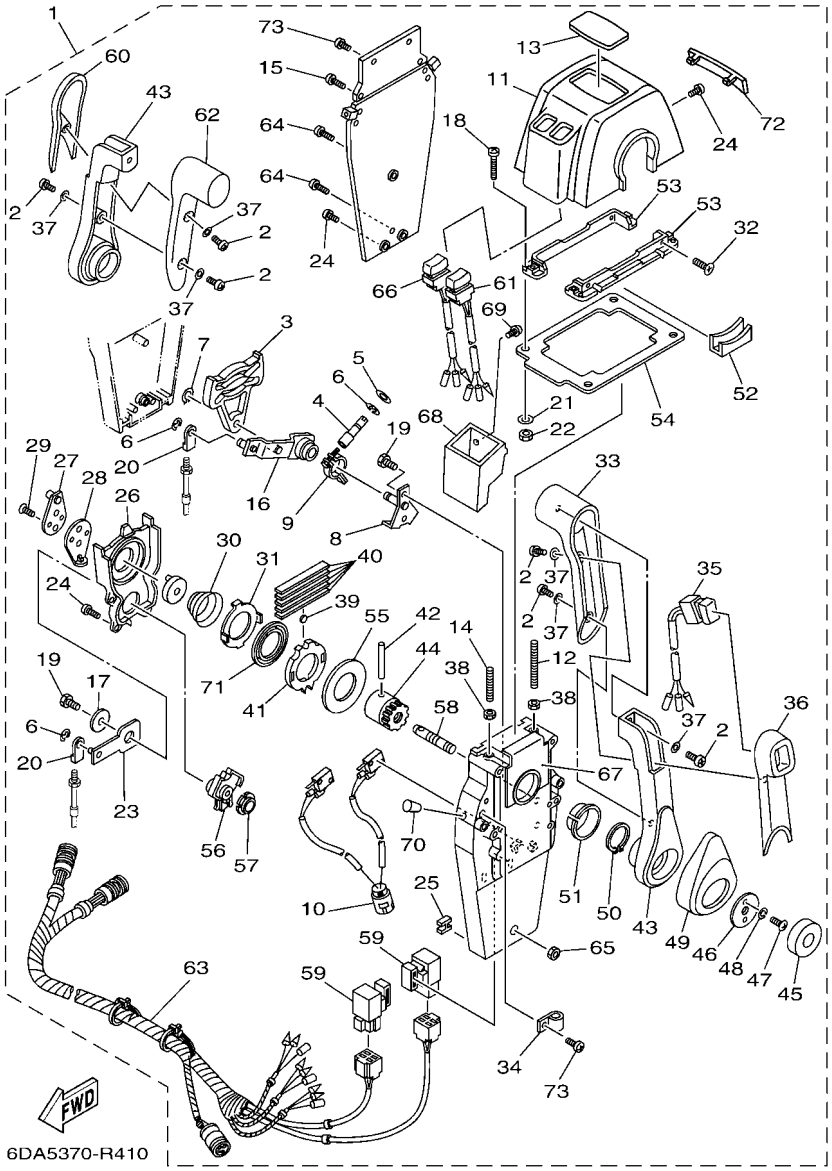

FIG. 37 REMOTE CONTROL ASSY 3 — CONTROL REMOTO COMPL 3

REF. NO.	PART NO. CODIGO Nº	DESCRIPTION DESCRIPCION	6BME	6BNE				REMARKS OBSERVACIONES
28	EL8–48254–00	.STOPPER, THROTTLE ADJUSTING .TAPON		2				
29	92780–06020	.SCREW, FLAT HEAD .TORNILLO CABEZA PLANA		4				
30	EL8–48244–00	.SPRING, FREE ACCEL. .RESORTE ACELERADOR LIBRE		2				
31	EL8–48245–00	.PLATE, LOCK .PLACA CERRADURA		2				
32	98780–05018	.SCREW, FLAT HEAD .TORNILLO, CABEZA PLANA		4				
33	704–48222–30	.GRIP, CONTROL LEVER .MANGO DE PALANCA CONTROL		2				
34	704–82594–00	.CLAMP .GRAMPA		1				
35	704–82563–70	.TRIM & TILT SWITCH ASSY .INTERRUPTOR DE INCLINACION		1				
36	704–48229–30	.GRIP, CONTROL LEVER .MANGO DE PALANCA CONTROL 2		1				
37	92990–05300	.WASHER, INTERNAL TOOTH .ARANDELA PLANA		6				
38	95380–06600	.NUT, HEXAGON .TUERCA		4				
39	701–48248–00	.ROLLER, FREE ACCEL. .RODILLO ACELERADOR LIBRE		2				
40	704–48238–00	.SPRING, DETENT .RESORTE		10				
41	704–48232–P1	.GEAR .ENGRANAJE 1		2				
42	EL8–48164–00	.PIN 2 .PASADOR 2		2				
43	704–48221–R0	.LEVER, CONTROL .PALANCA CONTROL		2				
44	704–48242–10	.SHAFT, DRIVE .EJE, PROPULSION		2				
45	704–48225–R0	.COVER .CUBIERTA		2				
46	704–48192–00	.WASHER 2 .RONDANA 2		2				
47	97890–06018	.SCREW, PAN HEAD .TORNILLO		4				
48	92990–06300	.WASHER, INTERNAL TOOTH .ARANDELA PLANA		4				
49	704–48224–R0	.COVER, CONTROL LEVER .CUBIERTA DE PALANCA CONTROL		2				
50	EL8–48279–00	.CIRCLIP 2 .SEGURO2		2				
51	704–48234–00	.BUSHING 1 .BUJE		2				
52	704–48219–R0	.COVER, LEAD .CUBIERTA		2				
53	704–48144–20	.PLATE, STOPPER 2 .PLACA, RETEN 2		2				
54	704–48176–10	.GROMMET .TOPON		1				

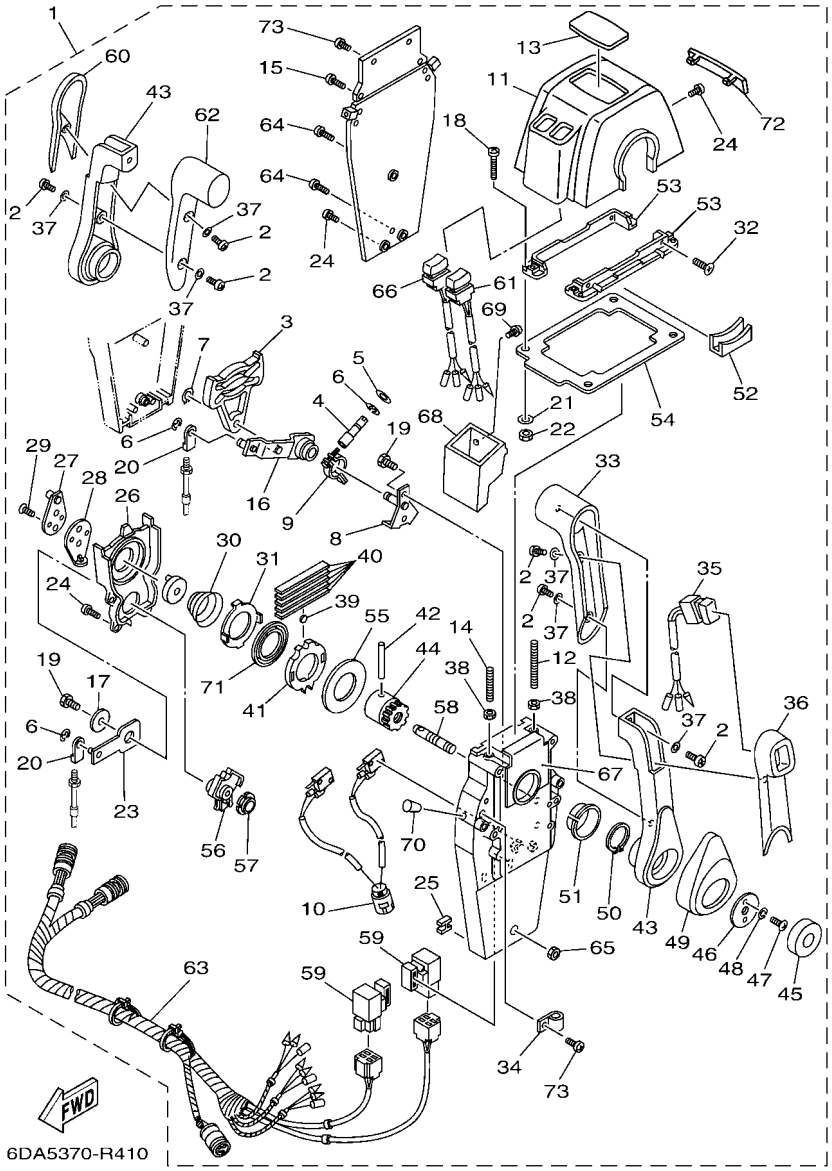

FIG. 37 REMOTE CONTROL ASSY 3 — CONTROL REMOTO COMPL 3

REF. NO.	PART NO. CODIGO Nº	DESCRIPTION DESCRIPCION	6BME	6BNE				REMARKS OBSERVACIONES
55	704–48192–P0	.WASHER 2 .RONDANA 2		2				
56	704–48233–00	.GEAR 2 .ENGRANAJE 2		2				
57	704–48235–00	.BUSHING .BUJE		2				
58	704–48153–00	.SHAFT, FREE ACCEL. .EJE		2				
59	704–81950–10	.RELAY ASSY .RELE COMPLETO		2				
60	704–48229–20	.GRIP, CONTROL LEVER .MANGO DE PALANCA CONTROL 2		1				
61	704–82563–80	.TRIM & TILT SWITCH ASSY .INTERRUPTOR DE INCLINACION		1				
62	704–48222–20	.GRIP, CONTROL LEVER .MANGO DE PALANCA CONTROL		1				
63	704–82590–10	.WIRE HARNESS ASSY .CONJUNTO DE CABLES		1				
64	704–48128–00	.SCREW 2 .TORNILLO 2		3				
65	704–48156–00	.NUT 1 .TUERCA 1		1				
66	704–82563–90	.TRIM & TILT SWITCH ASSY .INTERRUPTOR DE INCLINACION		1				
67	704–48284–P0	.GROMMET .TAPON		2				
68	704–48285–20	.GROMMET 2 .TAPON 2		1				
69	704–48129–60	.SCREW 3 .TORNILLO 3		2				
70	704–48166–00	.PLUG .TAPON		2				
71	704–48178–00	.PLATE, SHIFT .PLACA		2				
72	704–48167–30	.PLUG .TAPON AGUJERO		1				
73	97890–05016	.SCREW, PAN HEAD .TORNILLO		5				

FIG. 38 METER 1 — MEDIDOR 1

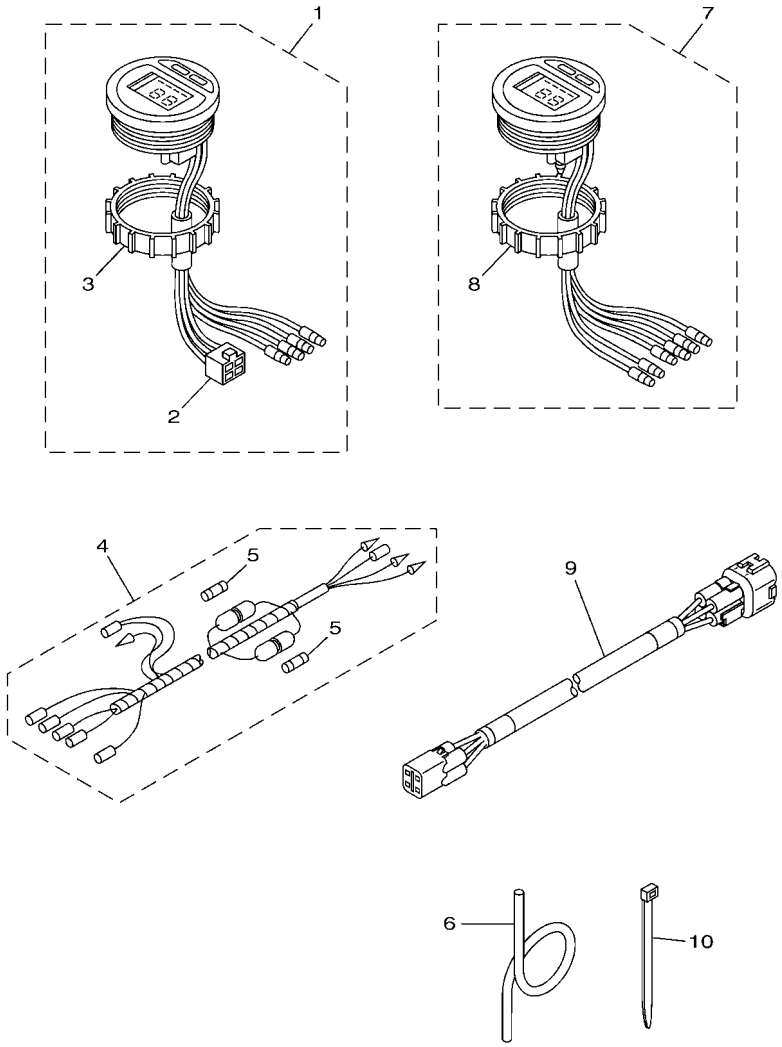

6S1G200-U420

REF. NO.	PART NO. CODIGO Nº	DESCRIPTION DESCRIPCION	6BME	6BNE				REMARKS OBSERVACIONES
1	6Y5–8350T–E0	TACHOMETER ASSY TACOMETRO COMPLETO	1					AP EXCEPT CAR,CHN,NME,AFR AP EXCEPT CAR,CHN,NME,AFR
2	9E450–04533	.CONNECTOR .CONECTOR	1					F-4-W F-4-W
3	6Y8–84383–00	.NUT, RING .TUERCA ANILLO	1					
4	6Y5–83553–M1	WIRE, LEAD (L=2.5M) CABLE CONDUCTOR (L=2.5M)	1					AP EXCEPT CAR,CHN,NME,AFR AP EXCEPT CAR,CHN,NME,AFR
5	6G1–82151–01	.FUSE (10A) .FUSIBLE (10A)	2					
6	6Y5–83557–10	TUBE (8M) TUBO (8M)	1					AP EXCEPT CAR,CHN,NME,AFR AP EXCEPT CAR,CHN,NME,AFR
7	6Y5–83570–A0	SPEEDOMETER ASSY VELOCIMETRO COMPLETO	1					AP EXCEPT CAR,CHN,NME,AFR AP EXCEPT CAR,CHN,NME,AFR
8	6Y8–84383–00	.NUT, RING .TUERCA ANILLO	1					
9	6Y5–83653–30	WIRE, LEAD (L=8.0M) CABLE CONDUCTOR (L=8.0M)	1					AP EXCEPT CAR,CHN,NME,AFR AP EXCEPT CAR,CHN,NME,AFR
10	90465–11M10	CLAMP BRIDA	2					AP EXCEPT CAR,CHN,NME,AFR AP EXCEPT CAR,CHN,NME,AFR

FIG. 39 METER 2 — MEDIDOR 2

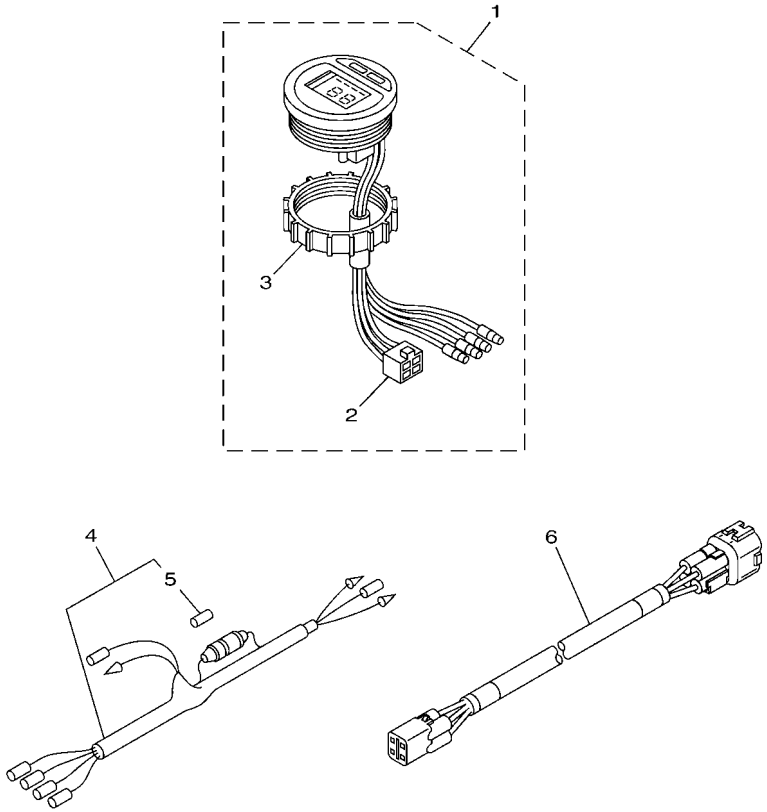

6DA5200-R460

REF. NO.	PART NO. CODIGO Nº	DESCRIPTION DESCRIPCION	6BME	6BNE				REMARKS OBSERVACIONES
1	6Y5–8350T–E0	TACHOMETER ASSY TACOMETRO COMPLETO		1				AP EXCEPT CAR,NME,CHN AP EXCEPT CAR,NME,CHN
2	9E450–04533	.CONNECTOR .CONECTOR		1				F-4-W F-4-W
3	6Y8–84383–00	.NUT, RING .TUERCA ANILLO		1				
4	6Y5–83553–01	WIRE, LEAD (L=2.5M) CABLE CONDUCTOR (L=2.5M)		1				AP EXCEPT CAR,NME,CHN AP EXCEPT CAR,NME,CHN
5	6G1–82151–01	.FUSE (10A) .FUSIBLE (10A)		1				
6	6Y5–83653–40	WIRE, LEAD (L=9.0M) CABLE CONDUCTOR (L=9.0M)		1				AP EXCEPT CAR,NME,CHN AP EXCEPT CAR,NME,CHN

FIG. 40 SWITCH & PANEL 1 — PANEL DE INTERRUPTOR 1

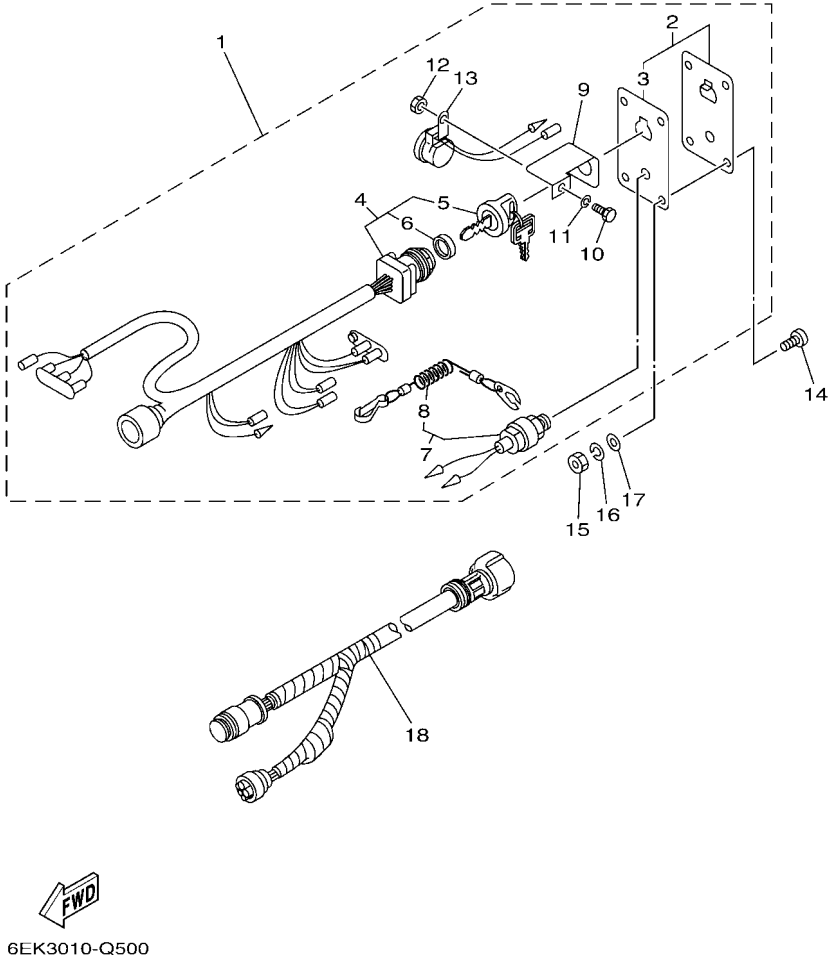

REF. NO.	PART NO. CODIGO Nº	DESCRIPTION DESCRIPCION	6BME	6BNE				REMARKS OBSERVACIONES
1	6R5–82570–0A	PANEL SWITCH ASSY INTERRUPTOR DE PANEL COMPL.	1					AP FOR CAR AP FOR CAR
2	704–82571–02	.PANEL, SWITCH .PANEL DE INTERRUPTOR	1					
3	6R5–82588–01	..PLATE ..PLACA	1					
4	6R5–82510–04	.MAIN SWITCH ASSY .CONJUNTO DE LLAVE IGNICION	1					
5	676–82577–01	..CAP, KEY ..TAPA	1					
6	703–82532–00	..CAP ..TAPA	1					
7	688–82575–02	.ENGINE STOP SWITCH ASSY .INTERRUPTOR DE PARADA COMPL	1					
8	682–82556–00	..LANYARD, STOP SWITCH ..CORDON DE INTERRUPTOR PARADA	1					
9	64D–82581–00	.STAY, CORD CLAMP .SOPORTE DE GRAMPA DE CABLE	1					
10	97303–05012	.BOLT .TORNILLO	1					
11	92903–05100	.WASHER, SPRING .RONDANA SENCILLA	1					
12	95303–05700	.NUT .TUERCA	1					
13	6R5–83383–00	.BUZZER .ZUMBADOR	1					
14	90149–05M05	SCREW TORNILLO DE REGLAJE	4					AP FOR CAR AP FOR CAR
15	95303–05600	NUT TUERCA	4					AP FOR CAR AP FOR CAR
16	92903–05100	WASHER, SPRING RONDANA SENCILLA	4					AP FOR CAR AP FOR CAR
17	92903–05600	WASHER, PLATE RONDANA SENCILLA	4					AP FOR CAR AP FOR CAR
18	6K1–8258A–40	EXTENSION, WIRE HARNESS (8M) EXTENSION, ARNES DE CABLES (8M	1					AP FOR CAR (10P) AP FOR CAR (10P)

FIG. 41 SWITCH & PANEL 2 — PANEL DE INTERRUPTOR 2

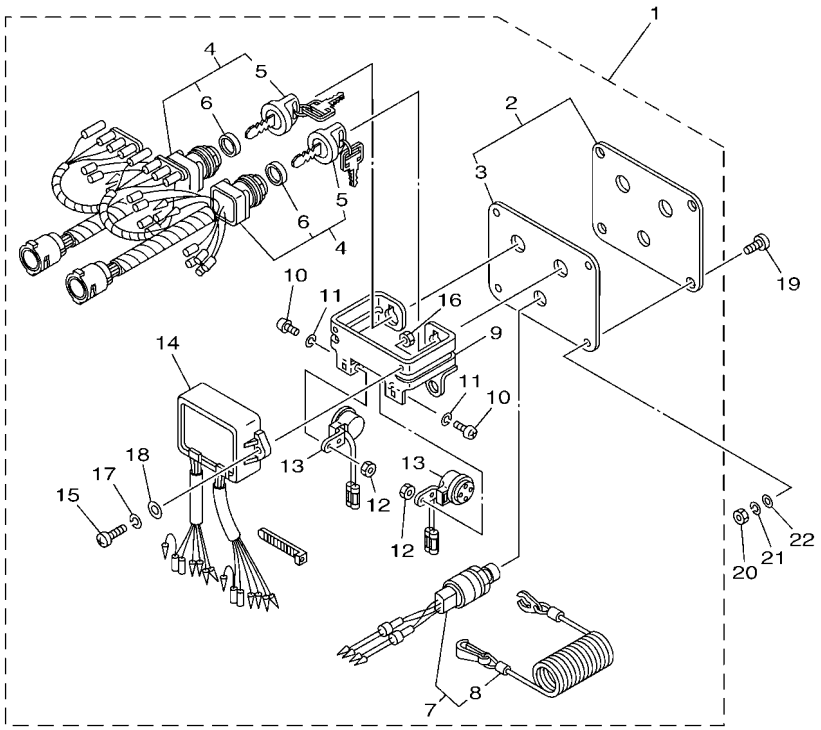

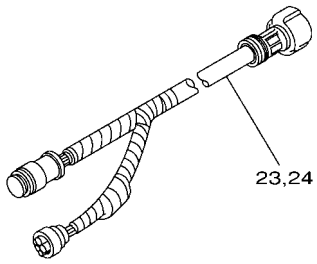

6BM4200-L380

REF. NO.	PART NO. CODIGO Nº	DESCRIPTION DESCRIPCION	6BME	6BNE				REMARKS OBSERVACIONES
1	61B–82570–07	PANEL SWITCH ASSY INTERRUPTOR DE PANEL COMPL.		1				AP EXCEPT CAR,NME,CHN AP EXCEPT CAR,NME,CHN
2	6K1–82571–02	.PLATE, PANEL SWITCH .PANEL DE INTERRUPTOR		1				
3	61B–82588–01	..PLATE ..PLACA		1				
4	61B–82510–03	.MAIN SWITCH ASSY .CONJUNTO DE LLAVE IGNICION		2				
5	676–82577–01	..CAP, KEY ..TAPA		1				
6	703–82532–00	..CAP ..TAPA		1				
7	6K1–82575–01	.ENGINE STOP SWITCH ASSY .INTERRUPTOR DE PARADA COMPL		1				
8	682–82556–00	..LANYARD, STOP SWITCH ..CORDON DE INTERRUPTOR PARADA		1				
9	6K1–83614–01	.BRACKET .SOPORTE		1				
10	98980–05010	.SCREW, BIND .TORNILLO DE LIGAR		2				
11	92990–05100	.WASHER, SPRING .ARANDELA PLANA		2				
12	95380–05600	.NUT .TUERCA		2				
13	6R5–83383–00	.BUZZER .ZUMBADOR		2				
14	61B–85830–01	.CONTROL UNIT ASSY .UNIDAD CONTROL		1				
15	98980–06020	.SCREW, BIND .TORNILLO DE LIGAR		2				
16	95380–06600	.NUT, HEXAGON .TUERCA		2				
17	92990–06100	.WASHER, SPRING .ARANDELA PLANA		2				
18	92990–06600	.WASHER, PLATE .ARANDELA PLANA		2				
19	90149–05M05	SCREW TORNILLO DE REGLAJE		4				AP EXCEPT CAR,NME,CHN AP EXCEPT CAR,NME,CHN
20	95380–05600	NUT TUERCA		4				AP EXCEPT CAR,NME,CHN AP EXCEPT CAR,NME,CHN
21	92990–05100	WASHER, SPRING ARANDELA PLANA		4				AP EXCEPT CAR,NME,CHN AP EXCEPT CAR,NME,CHN
22	92990–05600	WASHER, PLATE ARANDELA PLANA		4				AP EXCEPT CAR,NME,CHN AP EXCEPT CAR,NME,CHN
23	6K1–8258A–40	EXTENSION, WIRE HARNESS (8M) EXTENSION, ARNES DE CABLES (8M		1				AP EXCEPT CAR,NME,CHN AP EXCEPT CAR,NME,CHN
24	61B–8258A–01	EXTENSION, WIRE HARNESS (9.5M) EXTENSION, ARNES DE CABLES(9.5		1				AP EXCEPT CAR,NME,CHN AP EXCEPT CAR,NME,CHN

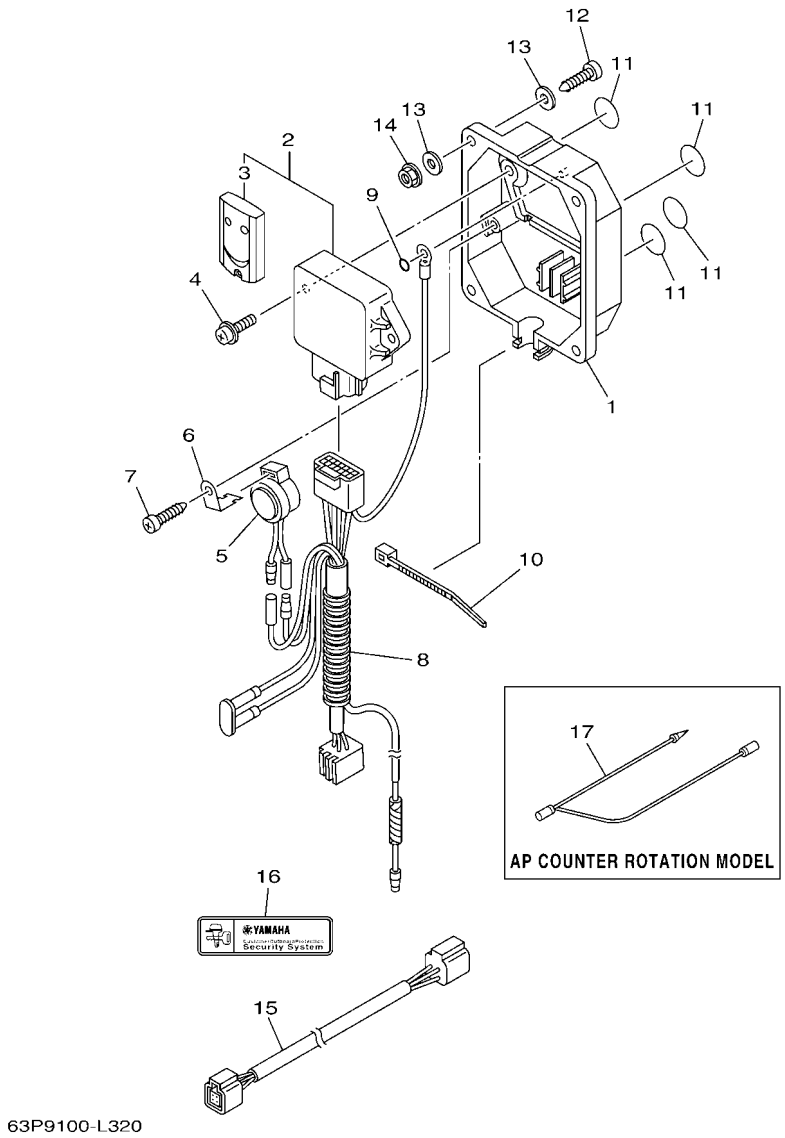

FIG. 42 OPTIONAL PARTS 1 — PARTES OPCIONALES 1

REF. NO.	PART NO. CODIGO Nº	DESCRIPTION DESCRIPCION	6BME	6BNE				REMARKS OBSERVACIONES
1	6Y8–86267–00	CASE COMPLETE 1 CAJA COMPLETA 1	1					FOR CAR FOR CAR
2	6Y8–86260–12	REMOTE CONTROL UNIT ASSY UNIDAD DE CONTROL REMOTO COMPL	1					FOR CAR FOR CAR
3	6AA–86261–22	.XMTR. COMP. .XMTR. COMP.	2					
4	97980–06216	SCREW, WITH WASHER TORNILLO, CON ARANDELA	2					FOR CAR FOR CAR
5	6X4–83383–00	BUZZER ZUMBADOR	1					FOR CAR FOR CAR
6	6X4–83386–00	STAY, BUZZER TIRANTE DE ZUMBADOR	1					FOR CAR FOR CAR
7	97780–60620	SCREW, TAPPING TORNILLO DE CABEZA DE CONO ACH	1					FOR CAR FOR CAR
8	6Y8–82509–10	WIRE, SUB LEAD CABLE SUBCONDUCTOR	1					FOR CAR FOR CAR
9	93210–04279	O-RING ANILLO O	1					FOR CAR FOR CAR
10	90465–11M10	CLAMP BRIDA	1					FOR CAR FOR CAR
11	6Y8–8454G–00	PATCH 1 PARCHE 1	4					FOR CAR FOR CAR
12	90167–06M00	SCREW, TAPPING TORNILLO DE ROSCA HEMBRA	4					UR FOR CAR UR FOR CAR
	97880–06035	SCREW, PAN HEAD TORNILLO DE CABEZA CON PLANA	4					UR FOR CAR UR FOR CAR
13	90201–06M30	WASHER, PLATE ARANDELA PLANA	8					FOR CAR FOR CAR
14	95780–06300	NUT, FLANGE TUERCA	4					FOR CAR FOR CAR
15	6Y8–82521–11	2FT PIGTAIL BUS CABLE CONDUCTOR	1					FOR CAR FOR CAR
16	6Y8–48277–00	STICKER 1 ETIQUETTE 1	4					FOR CAR FOR CAR
17	6H5–81315–00	LEAD WIRE ASSY CABLE CONDUCTOR COMPLETO		1				AP FOR CAR AP FOR CAR

FIG. 43 OPTIONAL PARTS 2 — PARTES OPCIONALES 2

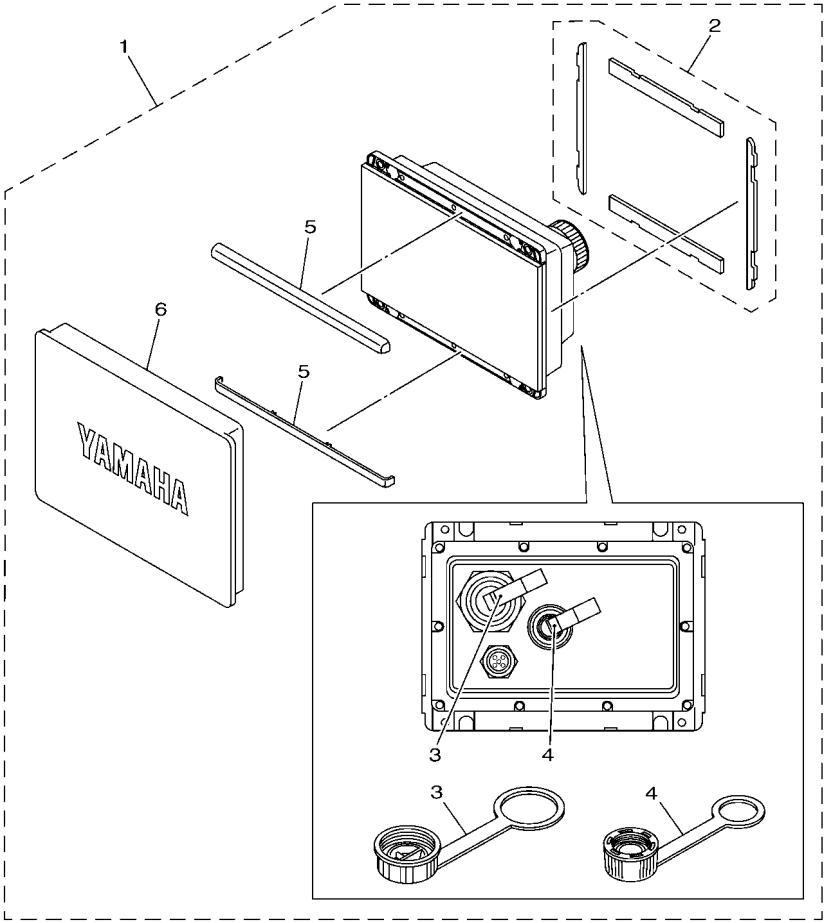

6ALH300-V410

REF. NO.	PART NO. CODIGO Nº	DESCRIPTION DESCRIPCION	6BME	6BNE				REMARKS OBSERVACIONES
1	6YM–83710–10	CL5 DISPLAY METRO DE INDICACION PLURAL	1					FOR CAR,CHN WITHOUT Wi-Fi FOR CAR,CHN WITHOUT Wi-Fi
2	6YM–22480–00	.SEAL ASSY .JUEGO DE JUNTO	1					
3	6YM–83956–00	.CAP 1 .TAPA 1	1					
4	6YD–83957–00	.CAP 2 .TAPA 2	1					
5	6YM–83512–00	.RING, SPEED METER .ANILLO	2					
6	6YM–87278–00	.COVER, METER .CUBIERTA DE MEDIDOR	1					

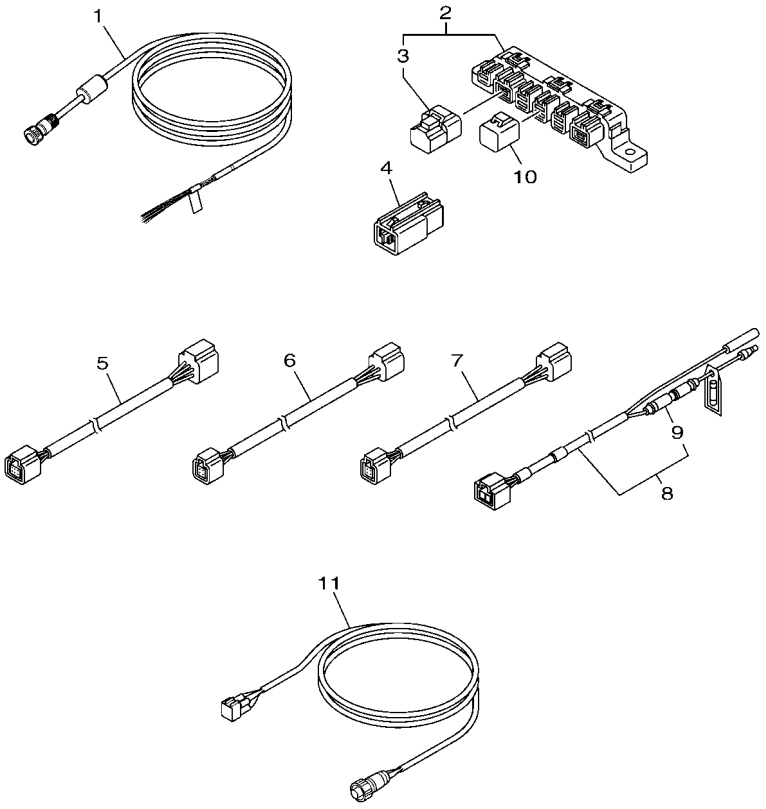

6ALH300-V420

FIG. 44 OPTIONAL PARTS 3 — PARTES OPCIONALES 3

REF. NO.	PART NO. CODIGO Nº	DESCRIPTION DESCRIPCION	6BME	6BNE				REMARKS OBSERVACIONES
1	6YD–8356N–00	WIRE, LEAD CABLE CONDUCTOR	1					FOR CAR,CHN FOR CAR,CHN
2	6Y8–81920–01	MULTI HUB ASSY TERMINAL COMPLETO	1					FOR CAR,CHN FOR CAR,CHN
3	6Y8–85371–01	.END OF LINE RESISTOR .RESISTENCIA DE FIN DE LINEA	1					
4	6Y8–81920–11	IN-LINE HUB ASSY TERMINAL COMPLETO	1					FOR CAR,CHN FOR CAR,CHN
5	6Y8–82553–31	25FT MAIN BUS CABLE	1					FOR CAR,CHN FOR CAR,CHN
6	6Y8–82521–11	2FT PIGTAIL BUS CABLE CONDUCTOR	1					FOR CAR,CHN FOR CAR,CHN
7	6Y8–82521–51	12FT PIGTAIL BUS CABLE CONDUCTOR	1					FOR CAR,CHN FOR CAR,CHN
8	6Y8–83553–02	8FT POWER WIRE CABLE CONDUCTOR	1					FOR CAR,CHN FOR CAR,CHN
9	6G1–82151–01	.FUSE (10A) .FUSIBLE (10A)	1					
10	6Y8–82582–11	CAP 1 (4PIN) TAPA 1 (4P)	2					FOR CAR,CHN FOR CAR,CHN
11	6YM–83553–00	CONVERSION HARNESS CABLE CONDUCTOR	1					FOR CAR,CHN FOR CAR,CHN

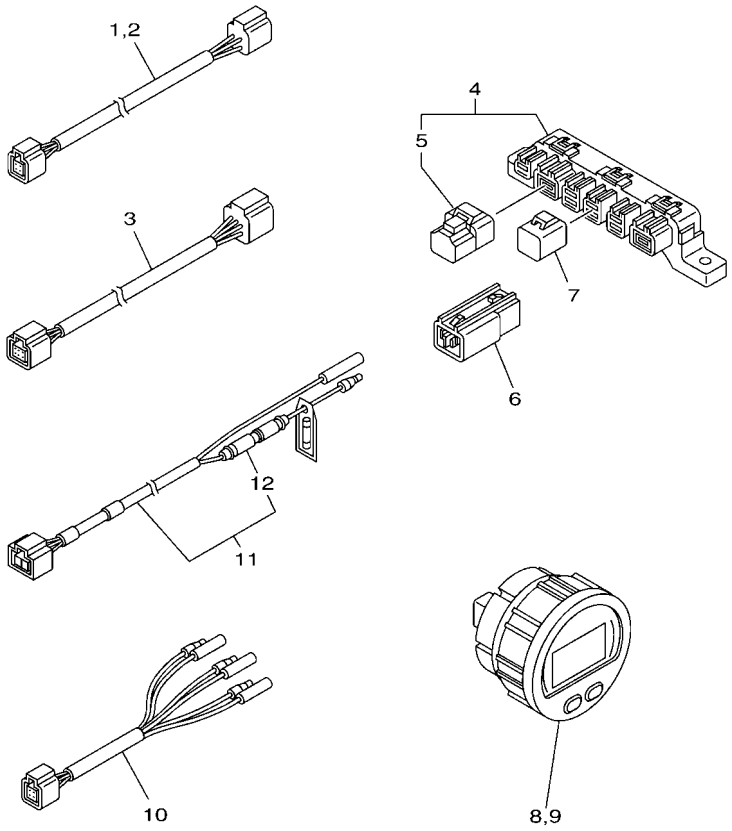

6P2B300-N420

FIG. 45 OPTIONAL PARTS 4 — PARTES OPCIONALES 4

REF. NO.	PART NO. CODIGO Nº	DESCRIPTION DESCRIPCION	6BME	6BNE				REMARKS OBSERVACIONES
1	6Y8–82521–11	2FT PIGTAIL BUS CABLE CONDUCTOR	2					FOR AFR FOR AFR
2	6Y8–82521–51	12FT PIGTAIL BUS CABLE CONDUCTOR	1					FOR AFR FOR AFR
3	6Y8–82553–31	25FT MAIN BUS CABLE	1					FOR AFR FOR AFR
4	6Y8–81920–01	MULTI HUB ASSY TERMINAL COMPLETO	1					FOR AFR FOR AFR
5	6Y8–85371–01	.END OF LINE RESISTOR .RESISTENCIA DE FIN DE LINEA	1					
6	6Y8–81920–11	IN-LINE HUB ASSY TERMINAL COMPLETO	1					FOR AFR FOR AFR
7	6Y8–82582–11	CAP 1 (4PIN) TAPA 1 (4P)	1					FOR AFR FOR AFR
8	6Y8–8350T–21	TACHOMETER, RD TACOMETRO COMPLETO	1					FOR AFR FOR AFR
9	6Y8–83500–21	S & FM METER, RD METRO COMPLETO	1					FOR AFR FOR AFR
10	6Y8–8356N–01	LEAD, FUEL TANK & GPS SENDER CABLE CONDUCTOR	1					FOR AFR FOR AFR
11	6Y8–83553–02	8FT POWER WIRE CABLE CONDUCTOR	1					FOR AFR FOR AFR
12	6G1–82151–01	.FUSE (10A) .FUSIBLE (10A)	1					

FIG. 46 OPTIONAL PARTS 5 — PARTES OPCIONLES 5

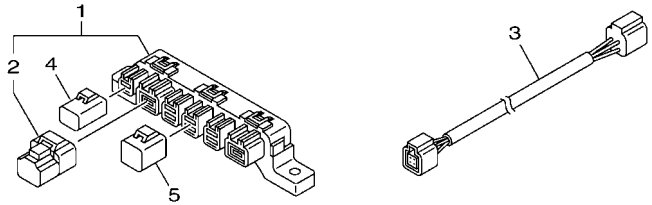

6BME200-V460

REF. NO.	PART NO. CODIGO Nº	DESCRIPTION DESCRIPCION	6BME	6BNE				REMARKS OBSERVACIONES
1	6Y8–81920–01	MULTI HUB ASSY TERMINAL COMPLETO		1				FOR CAR,CHN FOR CAR,CHN
2	6Y8–85371–01	.END OF LINE RESISTOR .RESISTENCIA DE FIN DE LINEA		1				
3	6Y8–82521–51	12FT PIGTAIL BUS CABLE CONDUCTOR		1				FOR CAR,CHN FOR CAR,CHN
4	6Y8–82582–01	CAP 1 (2PIN) TAPA 1		1				FOR CAR,CHN FOR CAR,CHN
5	6Y8–82582–11	CAP 1 (4PIN) TAPA 1 (4P)		3				FOR CAR,CHN FOR CAR,CHN

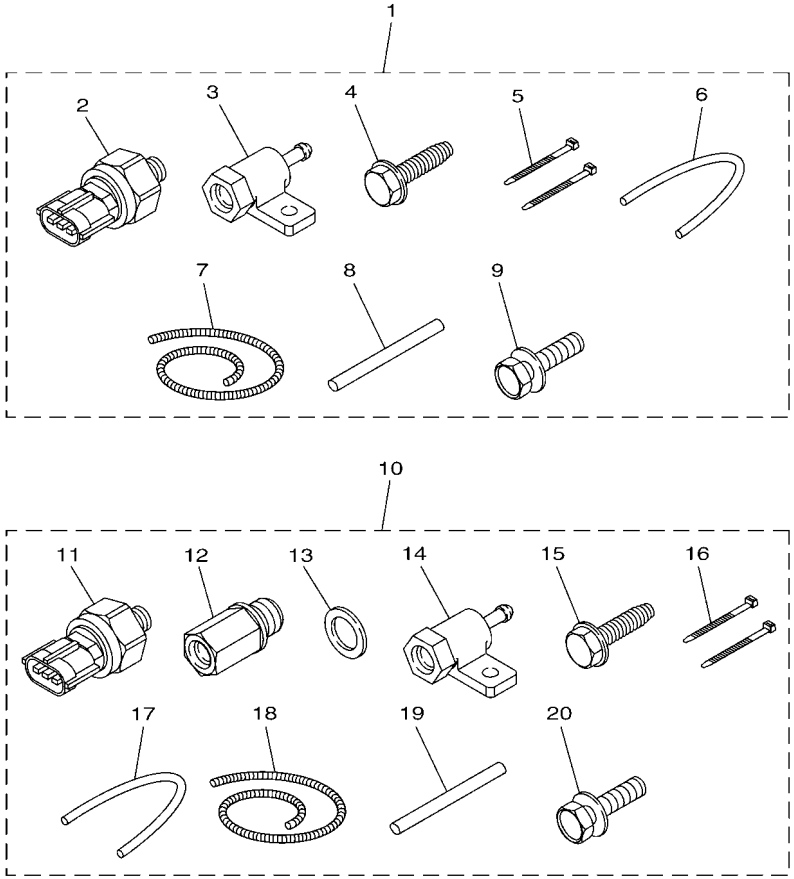

63PD370-P350

FIG. 47 OPTIONAL PARTS 6 — PARTES OPCIONALES 6

REF. NO.	PART NO. CODIGO Nº	DESCRIPTION DESCRIPCION	6BME	6BNE				REMARKS OBSERVACIONES
1	60V–8A4L1–1B	SENSOR, MODULE 1 SENSOR COMP. 1	1					FOR CHN,AFR FOR CHN,AFR
2	6AW–8366B–01	.SENSOR, WATER PRESSURE .SENSOR DE PRESION AGUA	1					
3	60V–8366D–00	.ADAPTOR, INPUT .CONECTOR BANJO 3	1					
4	90109–06M81	.BOLT .PERNO	1					
5	90465–11M10	.CLAMP .BRIDA	2					
6	90445–07017	.HOSE (L: 550MM) .TUBO (L: 550MM)	1					
7	90447–07013	.HOSE, COVER (L: 700MM) .MANGUERA DE CUBIERTA (L:700MM)	1					
8	60V–42629–01	.SEAL .SELLO 2	1					
9	97E95–06516	.BOLT, HEXAGON W/W DEEP RECESS .TORNILLO HEXAGONAL CON RONDONA	1					
10	63P–8A4L2–06	SENSOR, MODULE 2 SENSOR COMP. 2	1					FOR CAR FOR CAR
11	6AW–8366B–01	.SENSOR, WATER PRESSURE .SENSOR DE PRESION AGUA	2					
12	63P–8366C–00	.ADAPTOR, INPUT .CONECTOR BANJO 2	1					
13	90430–14115	.GASKET .JUNTA	1					
14	60V–8366D–00	.ADAPTOR, INPUT .CONECTOR BANJO 3	1					
15	90109–06M81	.BOLT .PERNO	1					
16	90465–11M10	.CLAMP .BRIDA	2					
17	90445–07017	.HOSE (L: 550MM) .TUBO (L: 550MM)	1					
18	90447–07013	.HOSE, COVER (L: 700MM) .MANGUERA DE CUBIERTA (L:700MM)	1					
19	60V–42629–01	.SEAL .SELLO 2	1					
20	97E95–06516	.BOLT, HEXAGON W/W DEEP RECESS .TORNILLO HEXAGONAL CON RONDONA	1					

FIG. 48 OPTIONAL PARTS 7 — PARTES OPCIONALES 7

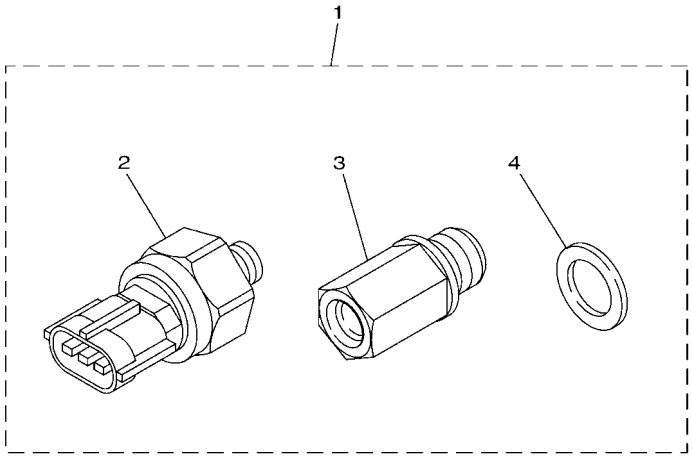

6P2B300-N410

REF. NO.	PART NO. CODIGO Nº	DESCRIPTION DESCRIPCION	6BME	6BNE				REMARKS OBSERVACIONES
1	63P–8A4L0–11	SENSOR, MODULE SENSOR COMP.		1				FOR CAR FOR CAR
2	6AW–8366B–01	.SENSOR, WATER PRESSURE .SENSOR DE PRESION AGUA		1				
3	63P–8366C–00	.ADAPTOR, INPUT .CONECTOR BANJO 2		1				
4	90430–14115	.GASKET .JUNTA		1				

FIG. 49 OPTIONAL PARTS 8 — PARTES OPCIONALES 8

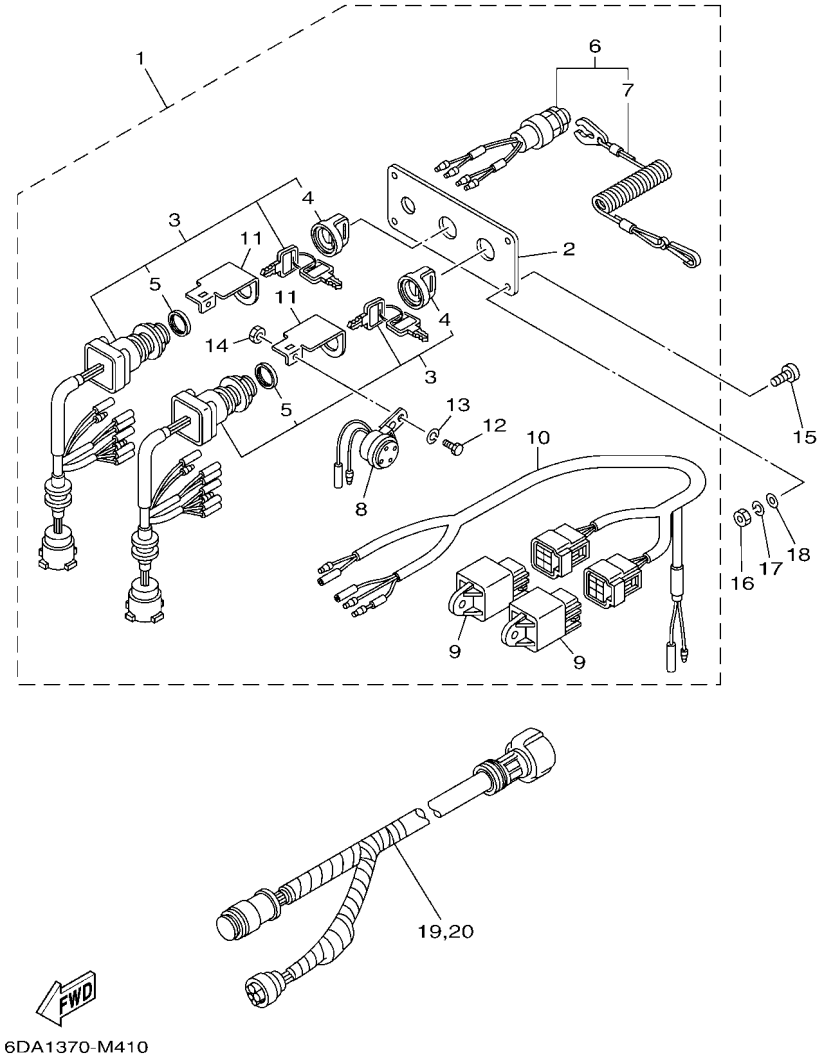

REF. NO.	PART NO. CODIGO Nº	DESCRIPTION DESCRIPCION	6BME	6BNE				REMARKS OBSERVACIONES
1	6Y8–82570–05	PANEL SWITCH ASSY INTERRUPTOR DE PANEL COMPL.		1				FOR CAR,CHN FOR CAR,CHN
2	6Y8–82571–01	.PLATE, PANEL SWITCH .PANEL DE INTERRUPTOR		1				
3	6Y8–82510–03	.MAIN SWITCH ASSY .CONJUNTO DE LLAVE IGNICION		2				
4	676–82577–01	..CAP, KEY ..TAPA		1				
5	703–82532–00	..CAP ..TAPA		1				
6	6K1–82575–01	.ENGINE STOP SWITCH ASSY .INTERRUPTOR DE PARADA COMPL		1				
7	682–82556–00	..LANYARD, STOP SWITCH ..CORDON DE INTERRUPTOR PARADA		1				
8	6R5–83383–00	.BUZZER .ZUMBADOR		2				
9	68V–81950–00	.RELAY ASSY .RELE COMPLETO		2				
10	6Y8–82507–00	.LEAD, IGNITION SWITCH RELAY .CABLE CONDUCTOR		1				
11	64D–82581–00	.STAY, CORD CLAMP .SOPORTE DE GRAMPA DE CABLE		2				
12	97003–05012	.BOLT .PERNO		2				
13	92903–05100	.WASHER, SPRING .RONDANA SENCILLA		2				
14	95303–05700	.NUT .TUERCA		2				
15	90149–05M05	SCREW TORNILLO DE REGLAJE		4				FOR CAR,CHN FOR CAR,CHN
16	95380–05600	NUT TUERCA		4				FOR CAR,CHN FOR CAR,CHN
17	92990–05100	WASHER, SPRING ARANDELA PLANA		4				FOR CAR,CHN FOR CAR,CHN
18	92990–05600	WASHER, PLATE ARANDELA PLANA		4				FOR CAR,CHN FOR CAR,CHN
19	6K1–8258A–40	EXTENSION, WIRE HARNESS (8M) EXTENSION, ARNES DE CABLES (8M		1				FOR CHN (10P) FOR CHN (10P)
20	61B–8258A–01	EXTENSION, WIRE HARNESS (9.5M) EXTENSION, ARNES DE CABLES(9.5		1				FOR CAR,CHN (10P) FOR CAR,CHN (10P)

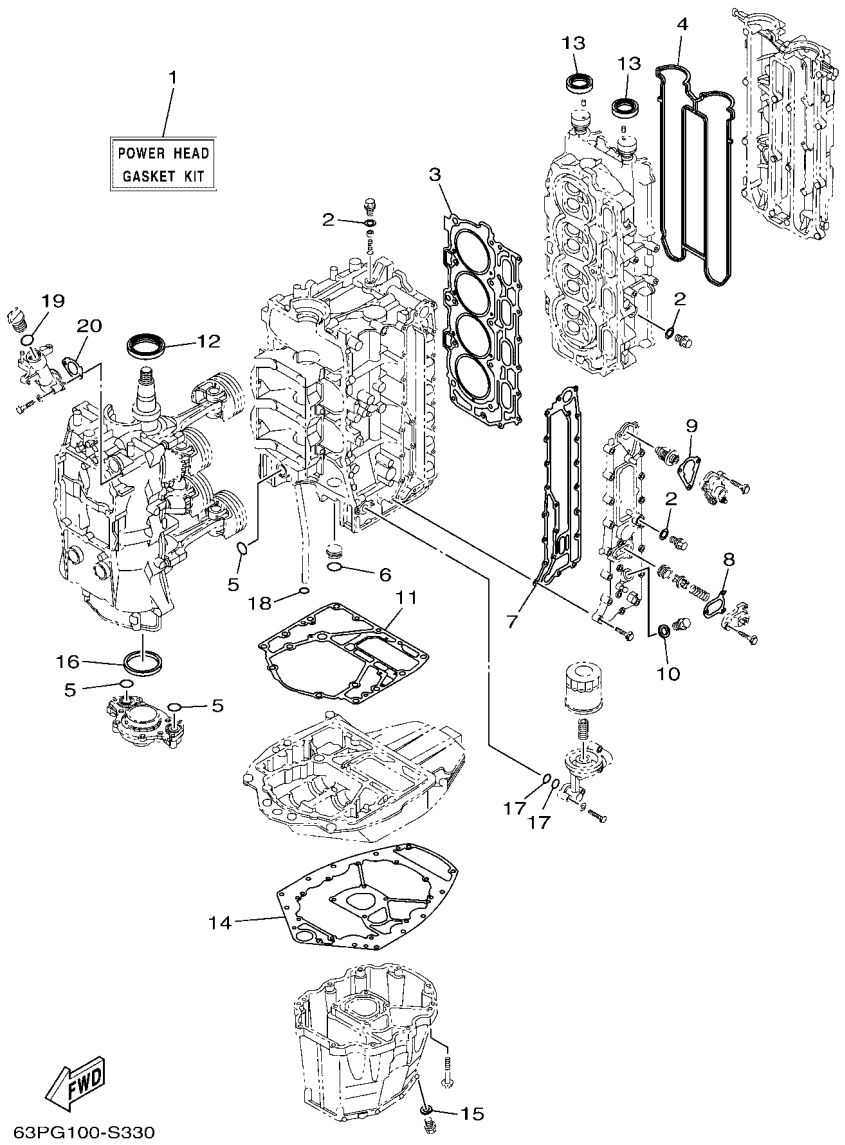

FIG. 50 REPAIR KIT 1 — ESTUCHE REPARATION 1

REF. NO.	PART NO. CODIGO Nº	DESCRIPTION DESCRIPCION	6BME	6BNE				REMARKS OBSERVACIONES
1	63P–W0001–04	POWER HEAD GASKET KIT JUEGO DE EMPAQUE DE MOTOR	1	1				
2	90430–14115	.GASKET .JUNTA	4	4				
3	63P–11181–00	.GASKET, CYLINDER HEAD 1 .JUNTA, DE CULATA 1	1	1				
4	63P–11193–00	.GASKET, HEAD COVER 1 .EMPAQUE	1	1				
5	93210–25552	.O-RING .ANILLO O	3	3				
6	93210–25647	.O-RING .ANILLO O	1	1				
7	63P–41114–A3	.GASKET, EXHAUST OUTER COVER .EMPAQUE	1	1				
8	67F–12435–A0	.GASKET .EMPAQUE	1	1				
9	63P–12414–00	.GASKET, COVER .EMPAQUE	1	1				
10	90201–186F1	.WASHER, PLATE .ARANDELA PLANA	1	1				
11	63P–11351–03	.GASKET, CYLINDER .JUNTA, DE CILINDRO	1	1				
12	93102–60004	.OIL SEAL .SELLO ACEITE	1	1				
13	93102–38008	.OIL SEAL .SELLO ACEITE	2	2				
14	63P–15312–02	.GASKET, OIL PAN .EMPAQ BANDEJA DE ACEITE	1	1				
15	90430–14M09	.GASKET .JUNTA	1	1				
16	69J–11355–00	.SEAL, CYLINDER 1 .RETEN ACEITE CILINDRO 1	1	1				
17	93210–19MJ1	.O-RING .ANILLO O	2	2				
18	93210–19MJ3	.O-RING .ANILLO O	1	1				
19	93210–24M79	.O-RING .ANILLO O	1	1				
20	63P–15364–A0	.GASKET, OIL PLUG .EMPAQUE TAPON DE ACEITE	1	1				

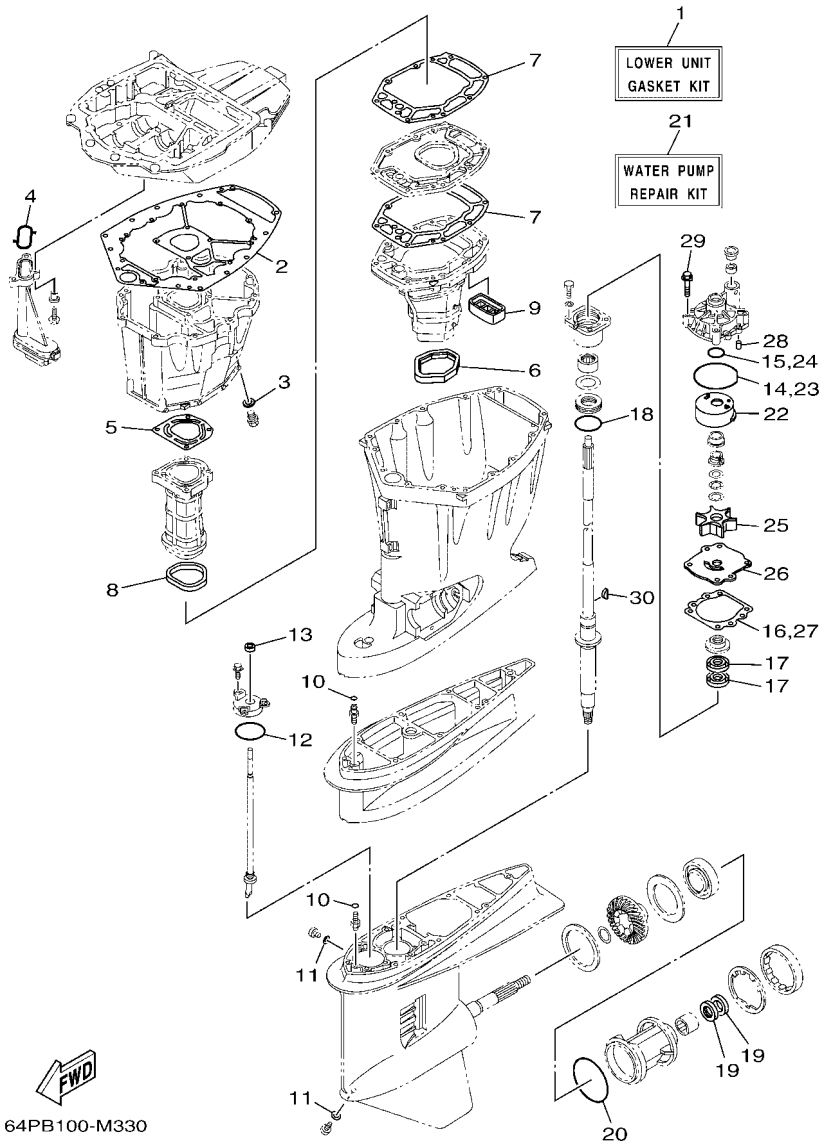

FIG. 51 REPAIR KIT 2 — ESTUCHE REPARATION 2

REF. NO.	PART NO. CODIGO Nº	DESCRIPTION DESCRIPCION	6BME	6BNE				REMARKS OBSERVACIONES
1	63P–W0001–22	LOWER UNIT GASKET KIT JUEGO DE EMPAQUE UNIDAD INFER.	1	1				
2	63P–15312–02	.GASKET, OIL PAN .EMPAQ BANDEJA DE ACEITE	1	1				
3	90430–14M09	.GASKET .JUNTA	1	1				
4	63P–13415–00	.SEAL, OIL STRAINER .SELLO COLADOR ACEITE	1	1				
5	63P–41133–A0	.GASKET, EXHAUST MANIFOLD 1 .EMPAQUE ESCAPE MULTIPLE	1	1				
6	69J–45123–00	.GASKET, MUFFLER .EMPAQUE SILENCIADOR	1	1				
7	63P–41134–A1	.GASKET, EXHAUST MANIFOLD .EMPAQUE	2	2				
8	63P–41138–00	.SEAL, EXT. 1 .SELLO, ESCAPE 1	1	1				
9	69J–45127–01	.SEAL .SELLO DE GOMA	1	1				
10	93210–07003	.O-RING .ANILLO O	2	2				
11	90430–08003	.GASKET .JUNTA	2	2				
12	93210–58144	.O-RING .ANILLO O	1	1				
13	93106–09014	.OIL SEAL .SELLO ACEITE	1	1				
14	93210–86M38	.O-RING .ANILLO O	1	1				
15	93210–37160	.O-RING .ANILLO O	1	1				
16	6E5–44315–A0	.GASKET, WATER PUMP .EMPAQUE	1	1				
17	93101–28M16	.OIL SEAL .SELLO ACEITE	2	2				
18	93210–55M14	.O-RING .ANILLO O	1	1				
19	93101–30M17	.OIL SEAL .SELLO ACEITE	2	2				
20	93210–97M55	.O-RING .ANILLO O	1	1				
21	6S1–W0078–01	WATER PUMP REPAIR KIT ESTUCHE REPARACION BOMBA AGUA	1	1				
22	6R3–44322–42	.INSERT, CARTRIDGE .CARTUCHO	1	1				
23	93210–86M38	.O-RING .ANILLO O	1	1				
24	93210–37160	.O-RING .ANILLO O	1	1				
25	6E5–44352–01	.IMPELLER .IMPULSOR	1	1				
26	6G5–44323–41	.OUTER PLATE, CARTRIDGE .PLACA EXTERIOR DEL CARTUCHO	1	1				
27	6E5–44315–A0	.GASKET, WATER PUMP .EMPAQUE	1	1				

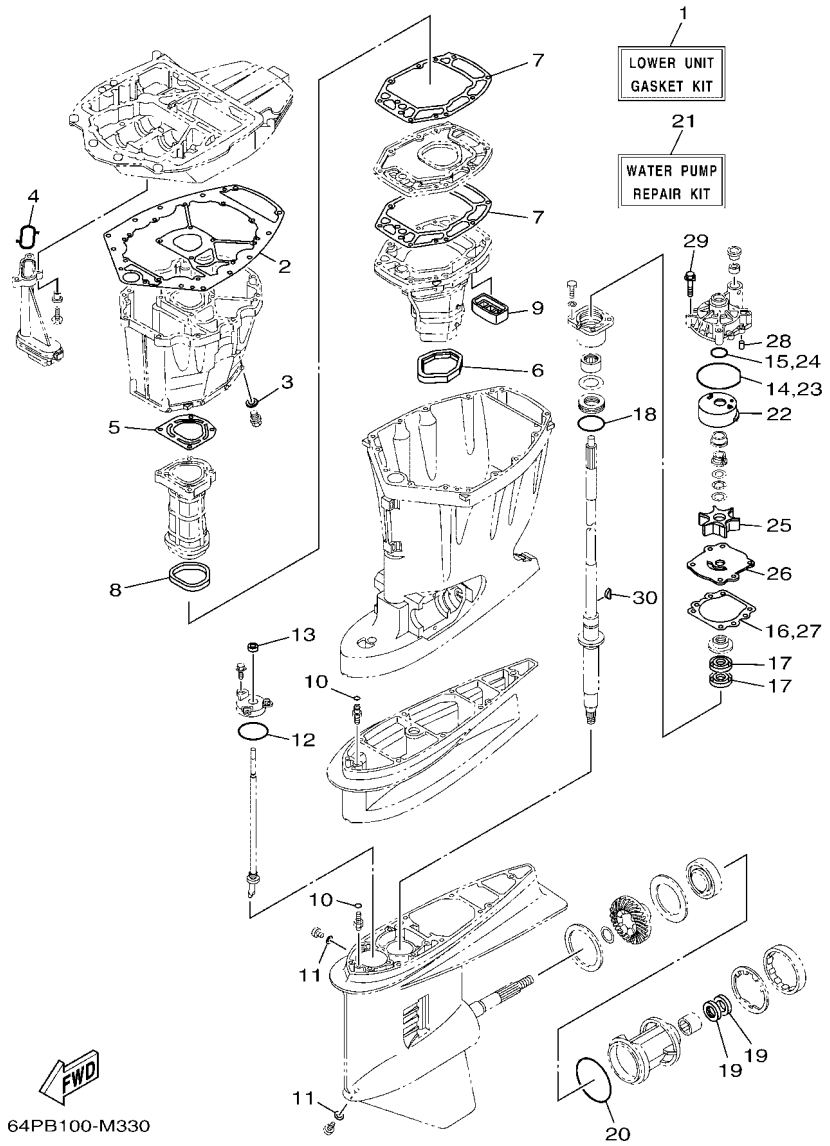

FIG. 51 REPAIR KIT 2 — ESTUCHE REPARATION 2

REF. NO.	PART NO. CODIGO Nº	DESCRIPTION DESCRIPCION	6BME	6BNE				REMARKS OBSERVACIONES
28	93606–12019	.PIN, DOWEL .PASADOR DE CLAVIJA	2	2				
29	90119–08191	.BOLT, WITH WASHER .TORNILLO CON ARANDELA	4	4				
30	90280–04M05	.KEY, WOODRUFF .CUNA WOODRUFF	1	1				

NUMERICAL INDEX
INDICE NUMERICO

PART NO. CODIGO Nº	REF. NO.
63P–11110–11–9S	5 – 2
63P–11119–00	3 – 22
63P–11119–10	3 – 23
6DA–11133–10	5 – 3
63P–11135–00	5 – 21
63P–11181–00	5 – 16
	50 – 3
63P–11191–00–9S	5 – 20
63P–11192–01	5 – 25
63P–11193–00	5 – 23
	50 – 4
63P–11197–00	3 – 11
69J–11301–01	5 – 10
	6 – 12
68T–11325–00	1 – 6
	6 – 2
63P–11325–01	1 – 3
	3 – 20
67F–11325–01	1 – 4
	1 – 7
	5 – 11
	6 – 13
63P–11325–11	1 – 2
	3 – 15
63P–11325–21	1 – 1
	3 – 12
67F–11328–01	5 – 12
	6 – 14
63P–11351–03	3 – 25
	50 – 11
69J–11355–00	28 – 16
	50 – 16
63P–11372–00	3 – 4
63P–11377–10	3 – 30
6BM–11410–02	4 – 1
63P–11416–31	4 – 4
63P–11416–41	4 – 4
63P–11416–51	4 – 4
63P–11417–41	4 – 5
63P–11417–51	4 – 5
63P–11417–61	4 – 5
63P–11417–71	4 – 5
63P–11417–81	4 – 5
63P–11426–31	4 – 6
63P–11426–41	4 – 6
63P–11426–51	4 – 6
6CB–11478–00	4 – 2
6BM–11511–00–94	3 – 26

PART NO. CODIGO Nº	REF. NO.
63P–11536–01	7 – 20
63P–11537–00	7 – 12
63P–11590–10	7 – 16
63P–11603–01	4 – 11
63P–11604–00	4 – 11
63P–11631–10–93	4 – 10
63P–11633–10	4 – 12
63P–11634–00	4 – 13
63P–11635–10	4 – 10
63P–11654–10	4 – 8
63P–11656–30	4 – 9
63P–11656–40	4 – 9
63P–11656–50	4 – 9
63P–12111–00	7 – 1
6CB–12113–00	7 – 4
51Y–12119–00	7 – 7
63P–12121–00	7 – 2
6BM–12121–00	7 – 2
63P–12171–10	7 – 9
63P–12181–10	7 – 10
63P–1240H–01–9S	6 – 20
67F–12411–01	1 – 8
	6 – 18
67F–12412–00	6 – 19
63P–12414–00	1 – 9
	6 – 21
	50 – 9
6G5–12416–00	6 – 6
67F–12435–A0	6 – 10
	50 – 8
63P–1243A–00	6 – 25
67F–1246A–A0–9S	6 – 9
6AW–12572–00	21 – 11
6R3–12581–00	21 – 12
6R3–12582–00	21 – 13
6R3–12583–00	21 – 14
6S5–12858–00	6 – 30
6AW–13119–00	28 – 14
63P–1312A–01	10 – 25
63P–13131–00	13 – 21
63P–13160–10	12 – 6
63P–13300–02	28 – 12
63P–13329–00	28 – 13
63P–13411–00	28 – 8
63P–13415–00	28 – 10
	51 – 4
63P–13437–63	15 – 23
69J–13440–04	1 – 10

PART NO. CODIGO Nº	REF. NO.
69J–13440–04	6 – 29
63P–13446–01	6 – 31
63P–13490–00	3 – 34
63P–13532–10	12 – 5
63P–13545–00	12 – 4
63P–13546–00	12 – 3
63P–13557–00	10 – 19
63P–13564–00	8 – 16
63P–13573–00	11 – 27
68V–13577–00	12 – 14
6BM–13593–00	11 – 24
69J–13631–00	28 – 15
63P–13641–10	10 – 12
63P–13643–00	10 – 21
63P–13645–00	10 – 15
63P–13716–00	11 – 23
63P–13751–21	10 – 2
6P2–13758–00	12 – 17
63P–13761–01	10 – 22
68V–13766–00	10 – 24
68V–13781–20	11 – 13
63P–13784–00	11 – 18
63P–13882–00	11 – 28
63P–13906–00	11 – 9
63P–13907–04	11 – 17
63P–13915–00	1 – 12
	11 – 19
63P–13971–10	12 – 2
63P–13974–40	12 – 7
63P–13975–40	12 – 16
63P–13975–50	12 – 16
63P–13976–40	12 – 8
63P–13976–50	12 – 8
63P–14148–00	11 – 20
63P–14149–00	12 – 1
68V–1416A–00	10 – 23
63P–14180–21	11 – 1
63P–14181–20	11 – 6
63P–14182–20	11 – 2
63P–14191–00	11 – 7
63P–14200–63	10 – 1
63P–14200–83	10 – 1
63P–14291–00	10 – 11
63P–14292–00	10 – 29
69J–14321–00	10 – 3
68V–14323–00	10 – 5
68V–14331–00	10 – 4
68V–14356–00	10 – 9

PART NO. CODIGO Nº	REF. NO.
68V–14386–00	11 – 15
63P–14435–00	18 – 13
63P–14440–00	8 – 9
6P2–14446–00	10 – 20
63P–14449–00	8 – 10
63P–14457–00	8 – 11
63P–14496–00	10 – 13
63P–14546–00	11 – 14
63P–14565–00	11 – 10
68V–14565–00	10 – 10
63P–14567–00	11 – 11
69J–14624–01	27 – 25
63P–14711–02	27 – 12
63P–14984–00	1 – 11
	11 – 12
63P–14985–00	11 – 16
63P–15311–11	28 – 2
63P–15312–02	28 – 1
	50 – 14
	51 – 2
63P–15316–01	28 – 5
63P–15319–00–9S	6 – 36
63P–15362–10	28 – 19
6G8–15363–00	6 – 34
63P–15364–A0	6 – 37
	50 – 20
6BM–15373–00	8 – 4
63P–15377–10	28 – 20
63P–15378–00	8 – 7
63P–2134X–00	9 – 2
63P–21841–10	11 – 26
63P–2247B–10	12 – 11
6YM–22480–00	43 – 2
68V–2411M–00	12 – 9
63P–2411R–00	11 – 4
63P–2411T–00	11 – 5
68V–24149–00	13 – 29
6P2–24170–00	9 – 1
63P–2419A–01	9 – 3
6AW–24300–01	12 – 21
6Y2–24305–06	14 – 6
6Y2–24306–45	14 – 1
6Y2–24307–51	14 – 8
64P–24311–10	9 – 10
63P–24311–20	13 – 16
63P–24311–30	13 – 16
64P–24312–00	9 – 9
63P–24312–10	13 – 33

PART NO. CODIGO Nº	REF. NO.
63P–24312–20	13 – 33
64P–24313–00	9 – 7
63P–24313–10	13 – 34
63P–24313–20	13 – 34
6BM–24314–00	13 – 31
63P–24314–10	13 – 31
64P–24314–10	9 – 17
63P–24315–00	13 – 32
64P–24315–00	9 – 12
63P–24315–10	13 – 32
64P–24316–10	9 – 13
63P–24316–30	13 – 4
63P–24316–40	13 – 4
63P–24317–30	12 – 10
63P–24317–40	12 – 10
63P–24325–40	12 – 13
63P–24325–50	12 – 13
6E5–24351–51	13 – 3
	14 – 3
	14 – 10
6Y2–24360–60	14 – 5
	14 – 12
6YK–24360–73	14 – 13
63P–24364–01	9 – 19
63P–24367–01	9 – 11
68V–24374–00	13 – 24
6AW–24377–01	13 – 2
6E5–24378–00	13 – 30
69J–24379–00	11 – 21
6E5–24379–00	9 – 21
63P–24410–20	13 – 18
68V–24411–00	13 – 23
68V–24412–00	13 – 19
63P–24413–00	13 – 25
63P–24414–00	13 – 27
63P–24423–00	13 – 22
68V–24444–00	13 – 28
4SV–24453–00	11 – 3
	11 – 8
68V–24454–00	13 – 20
6P3–24469–00	13 – 8
68V–24471–10	13 – 26
69J–24501–10	1 – 13
	12 – 15
69J–24502–00	9 – 8
63P–24519–00	12 – 22
68V–24519–00	12 – 12
6P3–24519–00	13 – 9

PART NO. CODIGO Nº	REF. NO.
6P3–24560–04	13 – 5
6P3–24562–03	13 – 7
6P3–24563–01	1 – 14
6P3–24563–02	13 – 6
6P3–24564–00	1 – 15
	13 – 10
63P–24566–00	13 – 11
68V–2481H–00	12 – 18
67F–28100–03	13 – 39
67F–28100–12	13 – 39
67F–2812A–00	17 – 30
63P–41113–04–9S	6 – 1
63P–41114–A3	6 – 4
	50 – 7
63P–41131–02	27 – 9
63P–41133–A0	27 – 10
	51 – 5
63P–41134–A1	27 – 16
	51 – 7
63P–41137–05	27 – 1
63P–41138–00	27 – 18
	51 – 8
63P–41213–00	22 – 42
63P–41237–00	22 – 48
6H4–41237–00	10 – 16
682–41238–01	10 – 18
63P–42154–10	22 – 37
63P–42157–00	22 – 49
68V–42171–00	22 – 50
6BG–42384–00	21 – 9
6DA–42384–00	20 – 23
6DA–42510–10–8D	24 – 8
63P–42541–10	21 – 15
6BM–42610–01	2 – 1
63P–42615–10	20 – 5
6DA–42617–00	15 – 22
63P–4261A–11	2 – 2
6CB–42628–00	2 – 13
60V–42629–01	47 – 8
	47 – 19
6CB–42647–A0	2 – 3
6AW–42663–01	2 – 9
6BM–42675–01	2 – 15
6BM–42676–01	2 – 16
6BM–42677–01	2 – 17
6BM–42678–01	2 – 14
6S1–4267A–01	2 – 19
6S1–42681–01	2 – 18

NUMERICAL INDEX
INDICE NUMERICO

PART NO. CODIGO Nº	REF. NO.
6DA–42697–00	2 – 12
63P–42710–11–8D	20 – 1
648–42715–00	22 – 28
63P–42716–01	20 – 6
6DA–42717–01	20 – 22
69J–42723–01	18 – 16
6E5–42724–01	27 – 7
6DA–42725–02	20 – 2
6H1–42726–22	21 – 8
61A–42727–01	20 – 26
6DA–42741–11–8D	21 – 1
6H4–42748–01	20 – 24
68F–42753–00	20 – 28
63P–42756–00	21 – 18
6CB–42761–00	20 – 3
6DA–42769–01	27 – 8
6EE–42794–40	20 – 30
6EE–42794–50	20 – 31
63P–42815–11–8D	20 – 7
6DA–42816–02–8D	20 – 8
6DA–42817–02–8D	20 – 9
6CB–42818–00	20 – 13
6CB–42819–00	20 – 14
64E–43111–02–8D	23 – 1
64E–43112–02–8D	23 – 7
64E–43126–10	23 – 35
64E–43131–01	23 – 11
64E–43139–11	24 – 1
66T–43144–00	20 – 17
6G5–43144–00	23 – 25
6E5–43145–01	33 – 8
6G5–43148–00	23 – 30
6G5–43181–02	23 – 27
6G5–43185–02	23 – 28
64E–43311–10–8D	23 – 21
63P–43338–10	25 – 54
61A–43376–00	24 – 6
63P–43800–21	25 – 1
63P–43801–10	25 – 4
63P–43802–20	25 – 37
6EK–43804–11	26 – 3
6EK–43805–01	26 – 2
6EK–4380F–00	26 – 6
63P–4380L–21	25 – 2
63P–4380P–20	25 – 9
63P–43810–21	25 – 3
63P–43811–20	25 – 6
63P–43812–20	25 – 23
63P–43814–20	25 – 13
6CJ–43816–00	25 – 61
63P–43816–10	25 – 20
6BC–43818–00	23 – 19
63P–4381C–20	25 – 41
63P–4381J–10	25 – 62
63P–43820–20	25 – 26
63P–43821–21	25 – 25
6CJ–43829–10	25 – 17
63P–4382A–10	25 – 31
63P–4382C–20	25 – 15
63P–43830–20	25 – 42
69J–43831–00	25 – 66
6H1–43841–11	25 – 18
63P–43843–10	25 – 53
6H1–43844–10	25 – 45
63P–43844–20	25 – 51
63P–43845–20	25 – 34
63P–43847–10	25 – 29
6H1–4384G–11	25 – 44
63P–4384G–20	25 – 55
63P–4384H–10	25 – 32
63P–43851–20	25 – 48
63P–43854–10	25 – 30
69J–43855–00	25 – 52
6H1–43856–10	25 – 46
63P–43857–10	25 – 59
63P–4385H–10	25 – 60
6CJ–43861–10	25 – 68
63P–43861–20	25 – 7
6EK–43862–00	26 – 12
6H1–43862–00	25 – 10
	25 – 12
63P–43862–10	25 – 24
6D8–43863–00	25 – 22
63P–43863–10	25 – 8
6H1–43866–01	25 – 39
62X–4386K–00	26 – 7
62X–43871–00	25 – 27
61A–43876–01	25 – 36
63P–43876–10	25 – 19
61A–43878–00	25 – 65
63P–43879–10	26 – 8
63P–43880–22	26 – 1
63P–43881–21	26 – 10
6EK–43882–00	26 – 11
6EK–43892–00	26 – 4
69J–4389J–00	25 – 33
63P–44117–01	22 – 8
63P–44118–00	22 – 23
6DA–44120–12	22 – 18
6DA–44121–00	22 – 16
63P–44122–00	22 – 13
69J–44135–00	22 – 43
63P–44150–11	29 – 18
64P–44150–11	31 – 19
6DA–44176–00	22 – 7
703–44189–20	35 – 36
703–44189–30	35 – 42
6X3–44191–00	35 – 47
6DA–44194–00	24 – 35
61A–44311–01	29 – 24
	31 – 25
6E5–44312–00	29 – 29
	30 – 5
	31 – 30
	32 – 5
6E5–44315–A0	29 – 33
	31 – 34
	51 – 16
	51 – 27
6R3–44322–42	29 – 25
	31 – 26
	51 – 22
6G5–44323–41	29 – 32
	31 – 33
	51 – 26
6E5–44352–01	29 – 30
	31 – 31
	51 – 25
63P–44361–00	30 – 1
	32 – 1
63P–44362–00	30 – 3
	32 – 3
63P–44363–00	30 – 6
	32 – 6
6E5–44365–01	29 – 28
	30 – 2
	30 – 4
	31 – 29
	32 – 2
	32 – 4
6E5–44366–01	27 – 27
6P2–44391–00	20 – 25
63P–44511–00	24 – 37
6DA–44514–00	24 – 28
6DA–44526–00	24 – 32
6G5–44526–00	23 – 3
6DA–44532–00	24 – 33
69J–44533–00	24 – 22
68V–44551–00–8D	24 – 13
63P–44553–00–8D	24 – 25
63P–44555–00	24 – 16
63P–44556–00–8D	24 – 26
61A–44575–01	24 – 15
63P–45111–00–8D	27 – 20
69J–45123–00	27 – 13
	51 – 6
69J–45127–01	27 – 19
	51 – 9
6C5–45155–01	27 – 28
63P–45181–02	27 – 17
6BM–45211–00–8D	27 – 34
6J9–45214–00	30 – 10
	32 – 10
6J9–45215–00	30 – 11
	32 – 11
6G5–45251–02	1 – 16
	23 – 2
6BM–45300–15–8D	29 – 1
6BN–45300–15–8D	31 – 1
6BM–45301–01–8D	29 – 2
	31 – 2
6E5–45318–00	27 – 23
6E5–45321–00	29 – 14
	31 – 15
6E5–45331–00–9S	29 – 36
	31 – 37
6BM–45332–00–9S	29 – 57
6BN–45332–00–9S	31 – 58
688–45341–10	29 – 7
	31 – 8
6E5–45344–00	29 – 42
	31 – 43
6J9–45371–01	1 – 19
	30 – 14
6K1–45371–02	1 – 19
	32 – 14
688–45375–00	29 – 11
	31 – 12
663–45376–00	29 – 10
	31 – 11
63P–45378–00	27 – 35
	29 – 12
63P–45378–00	31 – 13
63P–45379–00	27 – 32
6G5–45383–01	29 – 67
	31 – 69
6G5–45384–02	29 – 68
	31 – 70
63P–45501–11	29 – 44
	31 – 45
61A–45527–00	29 – 23
	31 – 24
6G5–45536–01	29 – 9
	31 – 10
61A–45538–00	29 – 20
	31 – 21
63P–45551–00	29 – 45
	31 – 46
6EH–45560–00	29 – 47
64P–45560–10	31 – 48
6G5–45567–01	29 – 5
	31 – 6
6G5–45567–10	29 – 5
	31 – 6
6G5–45567–20	29 – 5
	31 – 6
6G5–45567–30	29 – 5
	31 – 6
6G5–45567–40	29 – 5
	31 – 6
6G5–45567–50	29 – 5
	31 – 6
6G5–45567–60	29 – 5
	31 – 6
64P–45570–10	31 – 60
6EH–45571–00	29 – 59
6K1–45576–00	31 – 61
6G5–45576–10	29 – 60
6G5–45577–02	29 – 64
	31 – 67
6G5–45577–10	29 – 64
	31 – 67
6G5–45577–20	29 – 64
	31 – 67
6G5–45577–30	29 – 64
	31 – 67
6G5–45577–40	29 – 64
	31 – 67
6G5–45577–50	29 – 64
	31 – 67
6G5–45577–60	29 – 64
	31 – 67
6K1–45578–01	31 – 63
6K1–45578–10	31 – 63
6K1–45578–20	31 – 63
6K1–45578–30	31 – 63
6K1–45578–40	31 – 63
6K1–45578–50	31 – 63
6K1–45578–60	31 – 63
6E5–45587–01	29 – 39
	31 – 40
6E5–45587–10	29 – 39
	31 – 40
6E5–45587–20	29 – 39
	31 – 40
6E5–45587–30	29 – 39
	31 – 40
6E5–45587–40	29 – 39
	31 – 40
6E5–45587–50	29 – 39
	31 – 40
6E5–45587–60	29 – 39
	31 – 40
6J9–45611–01	29 – 48
6K1–45611–11	31 – 49
6DA–45631–01	29 – 55
	31 – 56
6E5–45633–01	29 – 56
	31 – 57
6E5–45634–02	29 – 49
	31 – 50
6G5–45970–02	30 – 21
6K1–45978–02	32 – 21
6G5–45978–03	30 – 21
63P–45987–00	30 – 16
	32 – 16
688–45997–01	30 – 17
	32 – 17
63P–46241–00	7 – 15
704–48119–50	36 – 11
704–48119–60	37 – 11
EL8–48127–00	36 – 24
	37 – 24
704–48128–00	37 – 64
703–48128–10	35 – 39
703–48129–00	35 – 41
704–48129–11	36 – 2
	37 – 2

NUMERICAL INDEX
INDICE NUMERICO

PART NO. CODIGO Nº	REF. NO.
704–48129–60	37 – 69
704–48144–10	36 – 53
704–48144–20	37 – 53
703–48152–10	35 – 6
703–48153–00	35 – 61
704–48153–00	36 – 58
	37 – 58
704–48156–00	37 – 65
EL8–48164–00	36 – 42
	37 – 42
704–48166–00	36 – 59
	37 – 70
704–48167–20	36 – 62
704–48167–30	37 – 72
704–48176–00	36 – 54
704–48176–10	37 – 54
704–48178–00	37 – 71
704–48178–10	36 – 61
703–48189–00	35 – 19
EL8–48191–00	36 – 17
	37 – 17
704–48192–00	36 – 46
	37 – 46
704–48192–P0	36 – 55
	37 – 55
703–48198–00	35 – 16
703–48205–23	34 – 1
	35 – 1
704–48205–R1	34 – 2
	36 – 1
703–48207–23	34 – 1
	35 – 1
704–48207–R1	34 – 3
	37 – 1
703–48211–10	35 – 25
703–48212–10	35 – 26
703–48213–10	35 – 27
703–48215–11	35 – 46
704–48215–60	36 – 13
704–48215–70	37 – 13
703–48219–10	35 – 34
704–48219–R0	36 – 52
	37 – 52
703–48221–10	35 – 28
704–48221–R0	36 – 43
	37 – 43
704–48222–10	36 – 33
703–48222–20	35 – 31

PART NO. CODIGO Nº	REF. NO.
704–48222–20	37 – 62
704–48222–30	37 – 33
703–48223–10	35 – 32
704–48224–R0	36 – 49
	37 – 49
703–48225–10	35 – 33
704–48225–R0	36 – 45
	37 – 45
703–48227–00	35 – 30
704–48229–20	37 – 60
704–48229–30	36 – 36
	37 – 36
704–48231–00	36 – 26
	37 – 26
703–48232–00	35 – 2
704–48232–P1	36 – 41
	37 – 41
704–48233–00	36 – 56
	37 – 56
703–48234–00	35 – 20
704–48234–00	36 – 51
	37 – 51
703–48235–00	35 – 5
704–48235–00	36 – 57
	37 – 57
703–48236–00	35 – 18
703–48238–00	35 – 24
704–48238–00	36 – 40
	37 – 40
EL8–48241–00	36 – 27
	37 – 27
704–48242–10	36 – 44
	37 – 44
703–48243–00	35 – 17
703–48244–00	35 – 23
EL8–48244–00	36 – 31
	37 – 30
703–48245–00	35 – 13
EL8–48245–00	36 – 32
	37 – 31
701–48246–00	36 – 5
	37 – 5
703–48246–00	35 – 29
701–48248–00	35 – 15
	36 – 39
	37 – 39
EL8–48251–00	36 – 3
	37 – 3

PART NO. CODIGO Nº	REF. NO.
703–48252–00	35 – 14
EL8–48254–00	36 – 28
	37 – 28
EL8–48259–00	36 – 7
	37 – 7
704–48261–00	36 – 16
	37 – 16
703–48261–01	35 – 4
704–48262–00	36 – 8
	37 – 8
703–48264–00	35 – 8
704–48264–00	36 – 9
	37 – 9
704–48265–00	36 – 4
	37 – 4
703–48265–10	35 – 11
703–48268–00	35 – 7
703–48271–00	35 – 3
704–48271–00	36 – 23
	37 – 23
6Y8–48277–00	42 – 16
EL8–48279–00	36 – 50
	37 – 50
703–48281–00	35 – 35
704–48281–00	36 – 14
	37 – 14
EL8–48281–00	36 – 12
	37 – 12
704–48283–00	36 – 18
	37 – 18
703–48284–00	35 – 58
703–48284–10	35 – 58
704–48284–P0	36 – 60
	37 – 67
704–48285–20	37 – 68
701–48287–00	35 – 45
704–48287–00	36 – 21
	37 – 21
703–48293–10	35 – 44
701–48320–50	34 – 4
701–48320–60	34 – 4
701–48320–80	34 – 4
6E5–48344–00	22 – 5
	22 – 35
703–48345–01	35 – 21
	36 – 20
	37 – 20
701–48350–00	34 – 4

PART NO. CODIGO Nº	REF. NO.
701–48350–20	34 – 4
701–48350–50	34 – 4
701–48350–80	34 – 4
703–48358–01	35 – 22
	36 – 25
	37 – 25
63P–48531–10	22 – 1
6E5–48538–00	22 – 3
6E5–61301–01	33 – 10
6E5–61303–01	33 – 14
6E5–61311–11	33 – 12
6E5–61313–00	33 – 11
6E5–61315–00	33 – 13
6E5–61350–02	33 – 1
6E5–61351–01	33 – 2
6E5–61355–00	33 – 5
68V–81145–01	10 – 7
68V–81146–01	10 – 26
68V–81147–00	10 – 28
6H5–81315–00	42 – 17
63P–8132G–10	15 – 20
6P2–81332–00	15 – 13
63P–81336–01	17 – 32
63P–81337–10	15 – 15
63D–81345–20	15 – 5
63P–81410–00	15 – 4
6BM–81450–00	15 – 1
63P–81460–00	15 – 2
63P–81673–01	15 – 6
6BR–81800–02	19 – 1
69J–81801–11	19 – 5
67F–81807–00	19 – 10
67F–81808–00	19 – 8
67F–81809–00	19 – 19
67F–81810–00	19 – 3
67F–81813–00	19 – 6
67F–81820–00	19 – 7
67F–81821–00	19 – 13
6K7–81826–11	19 – 24
69J–81828–00	19 – 25
68V–8182L–00	10 – 8
67F–81830–00	19 – 17
67F–81832–00	19 – 11
67F–81836–00	19 – 12
6C5–81839–00	19 – 21
67F–8183R–00	19 – 15
60V–8183T–00	19 – 18
69J–81840–11	19 – 4

PART NO. CODIGO Nº	REF. NO.
67F–81841–00	19 – 14
69J–81842–00	19 – 20
63P–81845–00	15 – 9
63P–81845–20	9 – 16
67F–81846–00	19 – 26
67F–81850–00	19 – 2
67F–81857–00	19 – 9
6C5–81869–00	19 – 23
67F–81891–00	19 – 16
63P–81919–00	17 – 33
6Y8–81920–01	44 – 2
	45 – 4
	46 – 1
6Y8–81920–11	44 – 4
	45 – 6
60V–81925–00	19 – 28
63P–81941–00	19 – 22
63P–81942–00	17 – 20
63P–81948–01	17 – 11
68V–8194A–00	17 – 3
63P–81950–00	17 – 8
68V–81950–00	49 – 9
704–81950–10	37 – 59
68V–81953–00	17 – 4
6AW–8195A–00	17 – 24
63P–81960–02	16 – 18
63P–81975–00	16 – 20
6EE–81994–40	15 – 24
6EE–81994–50	15 – 25
6AH–81996–00	20 – 32
6DA–82105–02	18 – 28
6G5–82119–00	17 – 7
6E5–82148–00	23 – 5
	23 – 8
66K–82149–00	23 – 24
63P–82151–00	17 – 23
67F–82151–00	17 – 25
6G1–82151–01	38 – 5
	39 – 5
	44 – 9
	45 – 12
67F–82151–10	17 – 26
63P–82170–02	17 – 22
68F–82176–00	17 – 31
63P–82181–20	26 – 5
63P–82310–01	16 – 1
63P–82314–00	16 – 15
6A0–82317–01	15 – 16

PART NO. CODIGO Nº	REF. NO.
67F–82361–00	16 – 4
	16 – 10
67F–82362–00	16 – 5
	16 – 9
63P–82380–00	10 – 27
63P–82388–00	16 – 13
6Y8–82507–00	49 – 10
6Y8–82509–10	42 – 8
61B–82510–03	41 – 4
6Y8–82510–03	49 – 3
6R5–82510–04	40 – 4
703–82510–45	35 – 48
6Y8–82521–11	42 – 15
	44 – 6
	45 – 1
6Y8–82521–51	44 – 7
	45 – 2
	46 – 3
703–82531–00	35 – 51
6K1–82532–00	35 – 50
703–82532–00	40 – 6
	41 – 6
	49 – 5
703–82540–00	35 – 55
704–82540–30	37 – 10
704–82540–40	36 – 10
6Y8–82553–31	44 – 5
	45 – 3
682–82556–00	35 – 53
	40 – 8
	41 – 8
	49 – 7
6P2–82560–01	18 – 21
69J–82563–01	18 – 15
703–82563–21	35 – 57
703–82563–31	35 – 57
704–82563–60	36 – 35
704–82563–70	37 – 35
704–82563–80	37 – 61
704–82563–90	37 – 66
6Y8–82570–05	49 – 1
61B–82570–07	41 – 1
6R5–82570–0A	40 – 1
6Y8–82571–01	49 – 2
6K1–82571–02	41 – 2
704–82571–02	40 – 2
6K1–82575–01	41 – 7
	49 – 6

NUMERICAL INDEX
INDICE NUMERICO

PART NO. CODIGO Nº	REF. NO.
688–82575–02	35 – 52
	40 – 7
703–82577–00	35 – 49
676–82577–01	40 – 5
	41 – 5
	49 – 4
64D–82581–00	40 – 9
	49 – 11
68F–82582–00	19 – 29
6DA–82582–00	18 – 2
6Y8–82582–01	46 – 4
6DA–82582–10	18 – 3
6Y8–82582–11	18 – 4
	44 – 10
	45 – 7
	46 – 5
69J–82587–01	18 – 17
63P–82588–00	3 – 35
6E9–82588–00	18 – 22
61A–82588–01	22 – 10
61B–82588–01	41 – 3
6R5–82588–01	40 – 3
61B–8258A–01	41 – 24
	49 – 20
688–8258A–20	35 – 54
688–8258A–30	18 – 30
6K1–8258A–40	40 – 18
	41 – 23
	49 – 19
704–82590–10	37 – 63
63P–82590–91	18 – 1
703–82591–00	35 – 59
703–82592–00	35 – 60
704–82594–00	36 – 34
	37 – 34
60V–8259F–00	22 – 31
69J–8259F–00	22 – 9
63P–8259L–00	11 – 25
63P–8259M–00	18 – 6
68F–82846–00	17 – 27
6R5–83383–00	40 – 13
	41 – 13
	49 – 8
6X4–83383–00	42 – 5
703–83383–11	35 – 56
6X4–83386–00	42 – 6
6Y8–83500–21	45 – 9
6Y8–8350T–21	45 – 8

PART NO. CODIGO Nº	REF. NO.
6Y5–8350T–E0	38 – 1
	39 – 1
6YM–83512–00	43 – 5
6YM–83553–00	44 – 11
6Y5–83553–01	39 – 4
6Y8–83553–02	44 – 8
	45 – 11
6Y5–83553–M1	38 – 4
6Y5–83557–10	38 – 6
6E5–83558–00	27 – 29
6YD–8356N–00	44 – 1
6Y8–8356N–01	45 – 10
6Y5–83570–A0	38 – 7
6DA–83614–00	18 – 19
63P–83614–01	18 – 18
6K1–83614–01	41 – 9
63P–83626–00	5 – 27
6AW–83651–00	18 – 14
6Y5–83653–30	38 – 9
6Y5–83653–40	39 – 6
6AW–8366B–01	47 – 2
	47 – 11
	48 – 2
63P–8366C–00	47 – 12
	48 – 3
60V–8366D–00	47 – 3
	47 – 14
63P–8366G–00	21 – 21
63P–8366P–01	18 – 24
67H–83672–02	24 – 3
6YM–83710–10	43 – 1
6YM–83956–00	43 – 3
6YD–83957–00	43 – 4
6Y8–84383–00	38 – 3
	38 – 8
	39 – 3
6Y8–8454G–00	42 – 11
68F–85119–00	17 – 14
6Y8–85371–01	44 – 3
	45 – 5
	46 – 2
68F–85516–01	17 – 12
60V–85544–00	17 – 29
689–85547–01	13 – 1
68V–85548–01	17 – 18
63P–85580–00	15 – 3
61A–85790–00	18 – 9
61B–85830–01	41 – 14

PART NO. CODIGO Nº	REF. NO.
6S1–85885–01	10 – 6
63P–85886–00	18 – 12
6BM–8591A–05	17 – 1
6C5–86120–00	9 – 14
6Y8–86260–12	42 – 2
6AA–86261–22	42 – 3
6Y8–86267–00	42 – 1
6YM–87278–00	43 – 6
63P–8A4L0–11	48 – 1
60V–8A4L1–1B	47 – 1
63P–8A4L2–06	47 – 10
K0F–A3741–00	7 – 5
K0F–A3742–00	7 – 6
K0F–A3743–00	7 – 3
K0F–A3751–00	7 – 8
K0F–A3751–10	7 – 8
K0F–A3751–20	7 – 8
K0F–A3751–30	7 – 8
K0F–A3751–40	7 – 8
K0F–A3751–50	7 – 8
K0F–A3751–60	7 – 8
K0F–A3751–70	7 – 8
K0F–A3751–80	7 – 8
K0F–A3751–90	7 – 8
K0F–A3751–A0	7 – 8
K0F–A3751–B0	7 – 8
K0F–A3751–C0	7 – 8
K0F–A3751–D0	7 – 8
K0F–A3751–E0	7 – 8
K0F–A3751–F0	7 – 8
K0F–A3751–G0	7 – 8
K0F–A3751–H0	7 – 8
K0F–A3751–J0	7 – 8
K0F–A3751–K0	7 – 8
K0F–A3751–L0	7 – 8
K0F–A3751–M0	7 – 8
K0F–A3751–N0	7 – 8
K0F–A3751–P0	7 – 8
K0F–A3751–R0	7 – 8
K0F–A3751–S0	7 – 8
K0F–A3751–T0	7 – 8
K0F–A3753–00	7 – 8
K0F–A3753–10	7 – 8
K0F–A3753–20	7 – 8
K0F–A3753–30	7 – 8
K0F–A3753–40	7 – 8
K0F–A3753–50	7 – 8
K0F–A3753–60	7 – 8

PART NO. CODIGO Nº	REF. NO.
K0F–A3753–70	7 – 8
63P–W0001–04	50 – 1
63P–W0001–22	51 – 1
6S1–W0078–01	1 – 20
	51 – 21
63P–W009A–06–9S	5 – 1
6BM–W009A–10–9S	5 – 1
6BM–W009B–05–9S	3 – 1
63P–W1165–10	4 – 7
63P–W1510–04–9S	3 – 2
6BM–W823A–00	16 – 2
6BM–W823B–00	16 – 3
6BM–W823C–00	16 – 7
6BM–W823D–00	16 – 8
90101–09M70	33 – 18
90101–12065	23 – 39
90105–06037	3 – 29
90105–06M07	5 – 13
	6 – 15
90105–10071	3 – 10
90105–10M00	30 – 15
	32 – 15
90105–14009	24 – 30
90109–06316	18 – 20
	20 – 4
	20 – 18
	21 – 20
	21 – 22
	21 – 26
	22 – 2
90109–06M80	18 – 23
90109–06M81	47 – 4
	47 – 15
90109–08019	22 – 33
90109–14007	24 – 21
90110–05020	7 – 21
90111–08078	2 – 4
90119–06135	9 – 24
	13 – 38
90119–06275	16 – 6
90119–06276	3 – 9
90119–06283	8 – 15
90119–06286	29 – 17
	31 – 18
90119–06287	27 – 33
90119–06299	11 – 22
90119–06301	8 – 13
90119–06309	13 – 15

PART NO. CODIGO Nº	REF. NO.
90119–06312	13 – 37
90119–06MA2	3 – 24
	6 – 11
90119–06MA4	6 – 5
	6 – 22
	16 – 19
90119–07234	5 – 7
90119–07235	5 – 6
90119–08022	3 – 28
90119–08182	27 – 2
90119–08187	20 – 21
90119–08189	27 – 5
90119–08191	29 – 35
	31 – 36
	51 – 29
90119–08M66	3 – 19
90119–08M91	5 – 19
90119–10007	27 – 21
90119–10008	30 – 9
	32 – 9
90119–10024	24 – 29
90119–10050	7 – 13
90119–10054	23 – 18
90119–10058	24 – 27
90119–10M07	7 – 17
90149–05M05	40 – 14
	41 – 19
	49 – 15
90151–05M05	6 – 3
90151–06M02	3 – 16
	3 – 21
90152–05M08	30 – 12
	32 – 12
90155–10010	5 – 18
90159–05059	24 – 2
90159–06053	21 – 5
90159–06M28	21 – 2
90167–06M00	42 – 12
90169–05M00	17 – 21
90170–09M05	33 – 19
90170–14M06	33 – 15
90170–16M01	29 – 46
	31 – 47
90171–18M04	30 – 19
	32 – 19
90176–14003	24 – 23
90179–08003	19 – 27
90179–24002	15 – 12

PART NO. CODIGO Nº	REF. NO.
90183–061A8	21 – 4
90185–05002	30 – 13
	32 – 13
90185–09M01	33 – 6
	33 – 20
90185–14M00	24 – 34
90185–22M11	23 – 15
90201–06M30	42 – 13
90201–06M31	22 – 38
	22 – 44
	22 – 51
90201–10060	23 – 17
90201–10M20	33 – 7
90201–10M76	33 – 17
90201–12426	23 – 41
90201–13M01	23 – 40
90201–156J2	20 – 11
90201–15M58	24 – 20
90201–16M01	24 – 31
90201–16M55	24 – 19
90201–186F1	6 – 24
	50 – 10
90201–22M01	29 – 21
	31 – 22
90201–24014	15 – 11
90201–26M59	23 – 14
90201–30M92	29 – 65
90201–35008	24 – 17
90201–38M60	24 – 9
90202–08M20	22 – 14
90202–16061	22 – 21
90202–32M19	24 – 18
90202–40M47	24 – 12
90206–10M04	22 – 39
	22 – 45
	22 – 52
90206–15M18	20 – 12
90206–22M19	29 – 22
	31 – 23
90249–06M19	23 – 31
90250–08M07	29 – 54
	31 – 55
90280–04M05	29 – 31
	31 – 32
	51 – 30
90280–05015	15 – 10
90282–04M00	29 – 66
	31 – 68

NUMERICAL INDEX
INDICE NUMERICO

PART NO. CODIGO Nº	REF. NO.
90338–25004	3 – 7
90340–08002	29 – 6
	31 – 7
90340–14M06	5 – 8
	6 – 27
	28 – 6
90340–18M09	6 – 23
90340–27129	3 – 17
90344–51019	5 – 4
90386–06M12	22 – 17
90386–08005	8 – 12
90386–10M16	23 – 29
90386–12069	22 – 30
90386–15M73	20 – 10
90386–16M66	22 – 20
90386–22M98	23 – 20
	23 – 36
90386–25M31	23 – 13
90386–38M32	24 – 11
90387–06176	17 – 13
90387–06263	28 – 9
90387–06280	8 – 14
90387–06285	15 – 18
90387–06289	9 – 5
	13 – 13
90387–06M29	22 – 40
	22 – 53
90387–06M43	21 – 7
90387–06M82	22 – 46
90387–08M37	20 – 20
90387–08M45	2 – 7
90387–10094	2 – 5
90387–10M05	23 – 32
90387–10M61	33 – 3
90387–14004	24 – 38
90430–06M03	5 – 14
	6 – 16
90430–08003	1 – 18
	29 – 8
	31 – 9
	51 – 11
90430–14115	3 – 14
	5 – 9
	6 – 28
	47 – 13
	48 – 4
	50 – 2
90430–14M09	1 – 17

PART NO. CODIGO Nº	REF. NO.
90430–14M09	28 – 7
	50 – 15
	51 – 3
90445–07017	47 – 6
	47 – 17
90445–070F1	27 – 31
90445–13M01	14 – 2
	14 – 9
90445–13M35	14 – 4
90445–15M03	7 – 19
90447–07013	47 – 7
	47 – 18
90450–22M14	8 – 5
90462–06013	6 – 39
90462–10051	8 – 6
90462–12013	21 – 25
90464–05141	16 – 14
90464–07M41	16 – 11
90464–09M31	9 – 18
90464–11012	9 – 20
90464–12002	12 – 20
90464–12017	16 – 21
90464–12224	18 – 26
90464–13249	21 – 19
90464–13M34	13 – 17
90464–15007	3 – 32
90464–18004	21 – 24
90464–18246	21 – 23
90464–20006	8 – 8
90464–20258	20 – 29
90464–23199	17 – 16
90464–26001	12 – 19
	18 – 27
90465–08M63	23 – 22
90465–11M10	6 – 26
	9 – 23
	13 – 35
	18 – 11
	21 – 10
	21 – 16
	23 – 16
	24 – 5
	27 – 30
	38 – 10
	42 – 10
	47 – 5
	47 – 16
90465–13M18	17 – 17

PART NO. CODIGO Nº	REF. NO.
90467–09M09	9 – 22
	12 – 23
90467–15M14	3 – 31
	3 – 33
90468–18008	22 – 6
	22 – 15
	22 – 36
90480–06M19	14 – 11
	16 – 17
90480–10627	17 – 15
90480–10M23	9 – 4
	13 – 14
90480–12314	5 – 26
90480–13M24	21 – 6
90480–15M31	15 – 17
90480–20M05	6 – 8
90480–22M81	20 – 19
90501–12082	22 – 27
90501–16M11	6 – 7
90501–16M37	29 – 50
	31 – 51
90506–16003	23 – 34
90506–16M39	7 – 18
90506–22001	20 – 16
90508–20M31	22 – 29
90560–12M01	33 – 4
91312–04020	25 – 57
91312–05035	25 – 63
91380–06025	25 – 67
91490–40030	30 – 20
	32 – 20
91609–16010	25 – 11
91690–30010	22 – 4
	22 – 25
91690–30020	23 – 33
91690–50014	8 – 3
91809–08006	5 – 5
91811–11001	3 – 27
91814–18002	3 – 5
	3 – 6
92780–06020	36 – 29
	37 – 29
92903–05100	40 – 11
	40 – 16
	49 – 13
92903–05600	40 – 17
92903–08100	19 – 32
92990–05100	41 – 11

PART NO. CODIGO Nº	REF. NO.
92990–05100	41 – 21
	49 – 17
92990–05300	36 – 37
	37 – 37
92990–05600	41 – 22
	49 – 18
92990–06100	2 – 10
	41 – 17
92990–06300	36 – 48
	37 – 48
92990–06600	41 – 18
92990–08600	2 – 6
	35 – 38
92990–10600	18 – 10
92990–18200	30 – 18
	32 – 18
92995–14600	24 – 24
	24 – 36
93101–28M16	29 – 37
	31 – 38
	51 – 17
93101–30M17	29 – 62
	31 – 65
	51 – 19
93102–38008	7 – 14
	50 – 13
93102–60004	4 – 3
	50 – 12
93106–09014	29 – 16
	31 – 17
	51 – 13
93106–19001	25 – 5
93210–04279	42 – 9
93210–064A5	25 – 40
	25 – 50
93210–07003	27 – 36
	29 – 13
	31 – 14
	51 – 10
93210–07N51	25 – 47
93210–08287	14 – 7
93210–09165	22 – 19
	25 – 16
93210–11N52	25 – 21
93210–12327	25 – 35
93210–12N52	25 – 38
93210–13M63	20 – 27
93210–16275	33 – 9

PART NO. CODIGO Nº	REF. NO.
93210–19MJ1	6 – 32
	50 – 17
93210–19MJ3	28 – 21
	50 – 18
93210–24M79	6 – 35
	50 – 19
93210–25552	3 – 18
	28 – 18
	50 – 5
93210–25647	3 – 8
	50 – 6
93210–29375	25 – 28
93210–30682	13 – 36
93210–37160	29 – 27
	31 – 28
	51 – 15
	51 – 24
93210–37MH7	24 – 10
93210–55M14	29 – 41
	31 – 42
	51 – 18
93210–58144	29 – 15
	31 – 16
	51 – 12
93210–68N50	25 – 14
93210–86M38	29 – 26
	31 – 27
	51 – 14
	51 – 23
93210–97M55	29 – 63
	31 – 66
	51 – 20
93306–209U0	29 – 58
93311–928U5	29 – 3
	31 – 3
93315–43061	29 – 61
	31 – 64
93317–330U2	29 – 38
	31 – 39
93332–00048	31 – 59
93332–000V3	29 – 4
93341–440U5	31 – 62
93341–465U4	31 – 5
93341–930V2	29 – 40
	31 – 41
93390–000U2	31 – 4
93410–16006	22 – 22
93410–22M11	23 – 37

PART NO. CODIGO Nº	REF. NO.
93410–37M04	24 – 14
93420–36M01	27 – 24
93430–06024	35 – 12
	36 – 6
	37 – 6
93501–04M02	22 – 26
93501–08001	25 – 49
	25 – 58
93503–16003	25 – 43
	29 – 53
	31 – 54
93505–32038	25 – 64
93507–32009	29 – 51
	31 – 52
93511–32017	29 – 52
	31 – 53
93604–10011	25 – 56
93605–10108	7 – 11
93605–17002	7 – 22
93606–12019	3 – 3
	29 – 34
	31 – 35
	51 – 28
93606–19M23	27 – 15
93608–16M16	27 – 4
	27 – 22
	27 – 37
	28 – 4
	30 – 7
	32 – 7
93700–06002	23 – 10
	23 – 23
93700–06M01	22 – 32
93700–06M03	22 – 34
94702–00391	1 – 5
	5 – 28
95303–05600	40 – 15
95303–05700	40 – 12
	49 – 14
95333–08600	19 – 31
95380–05600	35 – 9
	36 – 22
	37 – 22
	41 – 12
	41 – 20
	49 – 16
95380–05700	10 – 17
95380–06600	2 – 11

NUMERICAL INDEX
INDICE NUMERICO

PART NO. CODIGO Nº	REF. NO.
95380–06600	9 – 15
	21 – 3
	35 – 43
	36 – 38
	37 – 38
	41 – 16
95380–12600	23 – 42
95380–14700	33 – 16
95780–06300	42 – 14
95780–08300	2 – 8
95780–10300	24 – 7
95812–06025	28 – 11
95D95–06010	23 – 38
95D95–06016	8 – 17
	28 – 22
95D95–06020	15 – 19
	16 – 16
95D95–08012	20 – 15
97003–05012	49 – 12
97303–05012	40 – 10
97380–05025	35 – 10
97380–06018	36 – 19
	37 – 19
97380–08030	35 – 37
97513–06520	17 – 10
97513–08520	8 – 2
97513–08545	19 – 30
97602–04316	26 – 9
97607–04208	5 – 22
97780–50620	17 – 28
97780–60520	21 – 17
97780–60620	17 – 5
	17 – 19
	42 – 7
97880–06035	42 – 12
97890–05016	36 – 63
	37 – 73
97890–05025	36 – 15
	37 – 15
97890–06018	36 – 47
	37 – 47
97980–06216	27 – 26
	42 – 4
97985–04116	22 – 11
97985–06210	15 – 14
97985–06212	23 – 9
97985–06216	24 – 4
97D95–06010	23 – 26

PART NO. CODIGO Nº	REF. NO.
97D95–06025	22 – 41
	22 – 54
97D95–06035	22 – 47
97E75–06535	22 – 24
97E75–06540	6 – 33
97E75–08535	27 – 14
	28 – 3
97E75–08540	5 – 15
	6 – 17
	8 – 1
97E75–08560	27 – 11
97E75–10535	27 – 6
97E75–10545	27 – 3
97E95–06510	23 – 6
97E95–06512	6 – 40
	18 – 8
	18 – 25
97E95–06514	13 – 12
97E95–06516	9 – 6
	10 – 14
	15 – 21
	17 – 2
	18 – 5
	18 – 7
	47 – 9
	47 – 20
97E95–06530	5 – 24
	23 – 4
97E95–06540	28 – 17
97E95–06545	6 – 38
97E95–06550	22 – 12
97E95–06610	17 – 6
	17 – 9
97E95–06625	16 – 12
97E95–06635	15 – 8
97E95–08516	18 – 29
97E95–08520	23 – 12
97E95–08525	29 – 43
	31 – 44
97E95–10645	27 – 38
	30 – 8
	32 – 8
98580–04006	35 – 40
98780–05016	3 – 13
98780–05018	36 – 30
	37 – 32
98980–05010	41 – 10
98980–06020	41 – 15

PART NO. CODIGO Nº	REF. NO.
99001–08600	29 – 19
	31 – 20
99530–08012	15 – 7
99530–14016	5 – 17
9E450–04533	38 – 2
	39 – 2

PART NO. CODIGO Nº	REF. NO.

PART NO. CODIGO Nº	REF. NO.

PART NO. CODIGO Nº	REF. NO.