YAMAHA

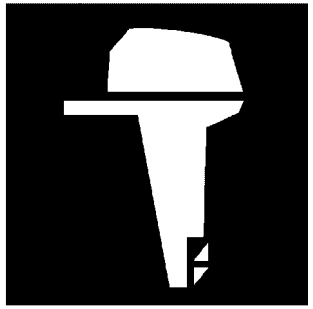

PARTS CATALOGUE
CATALOGO DE REPUESTOS

F300DET'19 (6JD1)
FL300DET'19 (6JE1)

1T6JD-200SA

( )

YAMAHA GENUINE Parts & Accessories

2022/10/26

NEWS NO.	DATE	COMMENT
PE0-OM-220001	Jan.,17,2022	MOD:FIG.29 BRACKET 2 LIST REVISION
PE0-OM-220007	Oct.,25,2022	MOD:F200-F300 MOTOR ASSY LIST/ILLUSTRATION REVISION

F300DET/FL300DET
PARTS CATALOGUE
©2019 by Yamaha Motor Co., Ltd.
1st edition, February 2019
All rights reserved.
Any reprinting or unauthorized use
without the written permission of
Yamaha Motor Co., Ltd.
is expressly prohibited.
Printed in Japan.

F300DET/FL300DET
CATALOGO DE REPUESTOS
©2019 por Yamaha Motor Co., Ltd.
1ª edición, febrero 2019
Todos los derechos reservados.
Toda reproducción o uso no autorizado
sin el consentimiento escrito de
Yamaha Motor Co., Ltd.
quedan expresamente prohibidos
Impreso en Japón.

FOREWORD

This Parts Catalogue is related to the parts for the model(s) on the cover page. When you are ordering replacement parts, please refer to this Parts Catalogue and quote both part numbers and part names correctly.

1. Modifications or additions which have been made after the issue of the Parts Catalogue will be announced in the Parts News.
   It is advisable that you make the necessary corrections to the Parts Catalogue according to the Parts News.

2. Abbreviations
   The following abbreviations are used in this Parts Catalogue.
   "UR" Use specified parts number.
   "UN" Use as many as needed.
   "AP" Alternate Parts
   "LM" Locally Made (Parts need to be ordered locally)
   "F#" Frame No. (Applicable machine No.)
   "O/S" Over Size

3. The number of components for assembly
   - Parts, which are to be supplied in an assembly, are listed with a dot (.) in front of the part name as shown below.
   - The numeral appearing to the right of each component part indicates the quantity of parts for each assembly unit.

PART NO.	DESCRIPTION	Q'TY	REMARKS
2F5–83310–60	FRONT FLASHER LIGHT ASSY	2	
115–83311–60	.BULB (6V–18W)	1	

4. Applicable colours of graphics are represented in the "REMARKS" as shown below.

PART NO.	DESCRIPTION	Q'TY	REMARKS
2N4–24110–00–X5	FUEL TANK COMP.	2	MXR
3J1–24240–10	.GRAPHIC, FUEL TANK	1	FOR MXR

5. Note that the illustrations for reference in finding parts numbers are not to be used for assembling. When assembling, please use the applicable service manual.

6. The asterisk (*) before a reference number indicates modified items after the first edition.

7. Applicable Serial No.
   Engine Serial No.

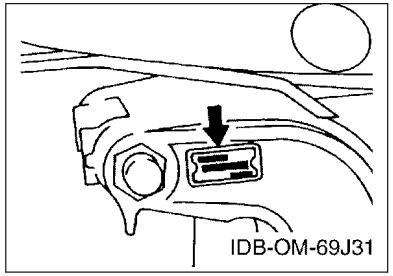

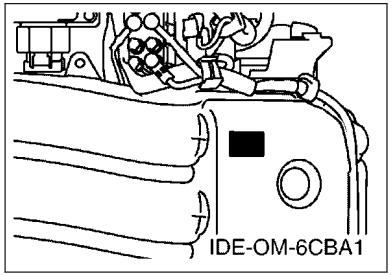

8. Applicable Engine Starting Serial No.

Model	Serial No.	Model	Serial No.
F300D	6JD-1000001	FL300D	6JE-1000001

9. Applicable Colour Code

Abbreviation	Colour Name	Colour Code
DBN1	DARK BLUISH GRAY 1	008D

10. Quantity Column Information

Column No.	Name Of Q'ty Column	Applicable Model
1	6JD1	F300DET
2	6JE1	FL300DET

PROLOGO

Este catálogo de repuestos corresponde a las piezas para el o los modelos que figuran en la página de portada. Al formular el pedido de repuestos, se ruega citar este catálogo y especificar correctamente el número y el nombre de las piezas.

1. Las modificaciones y agregados que se hayan realizado después de la edición de este Catálogo de Repuestos, serán anunciados en las Informaciones de Recambios.
   Es recomendable que se hagan las correcciones necesarias en el Catálogo de Repuestos de acuerdo con las Informaciones de Recambios.

2. Abreviaciones
   En este. Catálogo de Repuestos se emplean las siguientes abreviaciones.
   "UR" Usar el número de partes especificado
   "UN" Usar la cantidad necesaria
   "AP" Piezas sustitutivas
   "LM" Fabricación local (Hay que pedir los repuestos en las cercanías)
   "F#" Nº de bastidor (Nº aplicable a la máquina)
   "O/S" Sobredimensionado

3. La cantidad de componentes para el montaje
   - Los componentes, suministrados como conjunto, se describen con un punto (.) que precede al nombre del parte como se indica a continuación.
   - La numeración que aparece a la derecha de cada descripción indica la cantidad de partes por cada unidad de conjunto.

CODIGO Nº	DESCRIPCION	CANT.	OBSERVACIONES
2F5–83310–60	ENSAMBLAJE DE LA LUZ	2	
115–83311–60	.BOMBILLA (6V–18W)	1	

4. Los colores de los componentes se indican como sigue en la columna de "OBSERVACIONES".

CODIGO Nº	DESCRIPCION	CANT.	OBSERVACIONES
2N4–24110–00–X5	COMP. DEL TANQUE	2	MXR
3J1–24240–10	.GRAFICO, DEL TANQUE	1	PARA MXR

5. Debe tenerse en cuenta que las ilustraciones sirven como guia para la búsqueda de los números de partes y no deben usarse para el montaje. Durante el montaje, se recomienda usar el manual de taller correspondiente.

6. EL asterisco (*) antes del número de referencia indica los elementos modificados después de la primera edición.

7. Números de serie
   Nº de Serie del motor

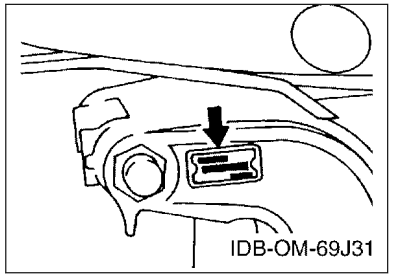

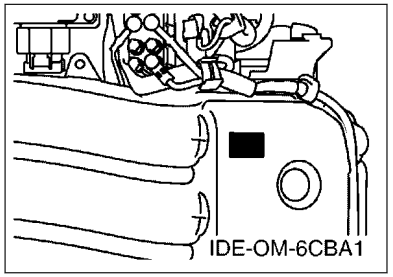

8. Números de serie del motor

Modelo	Nº de serie	Modelo	Nº de serie
F300D	6JD-1000001	FL300D	6JE-1000001

9. Códigos de color aplicables

Abreviatura	Nombre de color	Código de color
DBN1	DARK BLUISH GRAY 1	008D

10. Informacion para la columna de cantidades

Columna Nº	Nombre de la columna de cantidades	Modelo aplicable
1	6JD1	F300DET
2	6JE1	FL300DET

CONTENTS

SCHEDULED SERVICE PARTS....1
TOP COWLING....2
CYLINDER & CRANKCASE 1....3
CRANKSHAFT & PISTON....5
CYLINDER & CRANKCASE 2....6
CYLINDER & CRANKCASE 3....8
CYLINDER & CRANKCASE 4....9
VALVE....10
INTAKE 1....13
INTAKE 2....14
THROTTLE BODY ASSY 1....16
THROTTLE BODY ASSY 2....17
FUEL INJECTION PUMP 1....18
FUEL INJECTION PUMP 2....20
FUEL 1....21
FUEL 2....22
GENERATOR....23
ELECTRICAL 1....24
ELECTRICAL 2....26
ELECTRICAL 3....27
ELECTRICAL 4....29
ELECTRICAL 5....31
STARTING MOTOR....32
BOTTOM COWLING 1....33
BOTTOM COWLING 2....35
BOTTOM COWLING 3....37
CONTROL....38
BRACKET 1....40
BRACKET 2....42
POWER TRIM & TILT ASSY 1....44
POWER TRIM & TILT ASSY 2....48
UPPER CASING....49
OIL PAN....51
LOWER CASING & DRIVE 1....52
LOWER CASING & DRIVE 2....56
LOWER CASING & DRIVE 3....58
LOWER CASING & DRIVE 4....62
STEERING GUIDE ATTACHMENT 1....64
STEERING GUIDE ATTACHMENT 2....65
DBW REMOTE CONTROL 1 (SINGLE)....66
DBW REMOTE CONTROL 2 (TWIN)....69
OPTIONAL PARTS 1....73
OPTIONAL PARTS 2....74
OPTIONAL PARTS 3....75
OPTIONAL PARTS 4....76
OPTIONAL PARTS 5....77
OPTIONAL PARTS 6....78
OPTIONAL PARTS 7....79
OPTIONAL PARTS 8....80
REPAIR KIT 1....81
REPAIR KIT 2....82

INDEX

NUMERICAL INDEX....84

CONTENIDO

PARTES DE REPUESTO TEMPORALES..... 1
SOPORTE SUPERIOR..... 2
CILINDRO & CARTER 1..... 3
CIGUENAL & PISTON.....5
CILINDRO & CARTER 2..... 6
CILINDRO & CARTER 3..... 8
CILINDRO & CARTER 4..... 9
VALVULA.....10
ADMISION 1.....13
ADMISION 2.....14
CAJA DE ACELERADOR COMPL 1.....16
CAJA DE ACELERADOR COMPL 2.....17
BOMBA DE INYECTOR 1..... 18
BOMBA DE INYECTOR 2..... 20
COMBUSTIBLE 1.....21
COMBUSTIBLE 2.....22
GENERADOR.....23
EQUIPO ELECTRICO 1..... 24
EQUIPO ELECTRICO 2..... 26
EQUIPO ELECTRICO 3..... 27
EQUIPO ELECTRICO 4..... 29
EQUIPO ELECTRICO 5..... 31
MOTOR DE ARRANQUE.....32
CUBIERTA INFERIOR 1..... 33
CUBIERTA INFERIOR 2..... 35
CUBIERTA INFERIOR 3..... 37
CONTROL..... 38
SOPORTE 1..... 40
SOPORTE 2..... 42
COMPONER Y PODER VARILLA 1.....44
COMPONER Y PODER VARILLA 2.....48
FUNDA SUPERIOR.....49
OIL PAN.....51
IMPULSOR E INFERIOR 1..... 52
IMPULSOR E INFERIOR 2..... 56
IMPULSOR E INFERIOR 3..... 58
IMPULSOR E INFERIOR 4..... 62
ADITAMENTO GUIA DE GOBIERNO 1.....64
ADITAMENTO GUIA DE GOBIERNO 2.....65
CAJA DE CONTROL 1 (UNICO).....66
CAJA DE CONTROL 2 (DOBLE)..... 69
PARTES OPCIONALES 1.....73
PARTES OPCIONALES 2.....74
PARTES OPCIONALES 3.....75
PARTES OPCIONALES 4.....76
PARTES OPCIONLES 5..... 77
PARTES OPCIONALES 6.....78
PARTES OPCIONALES 7.....79
PARTES OPCIONALES 8.....80
ESTUCHE REPARATION 1..... 81
ESTUCHE REPARATION 2..... 82

INDICE

INDICE NUMERICO.....84

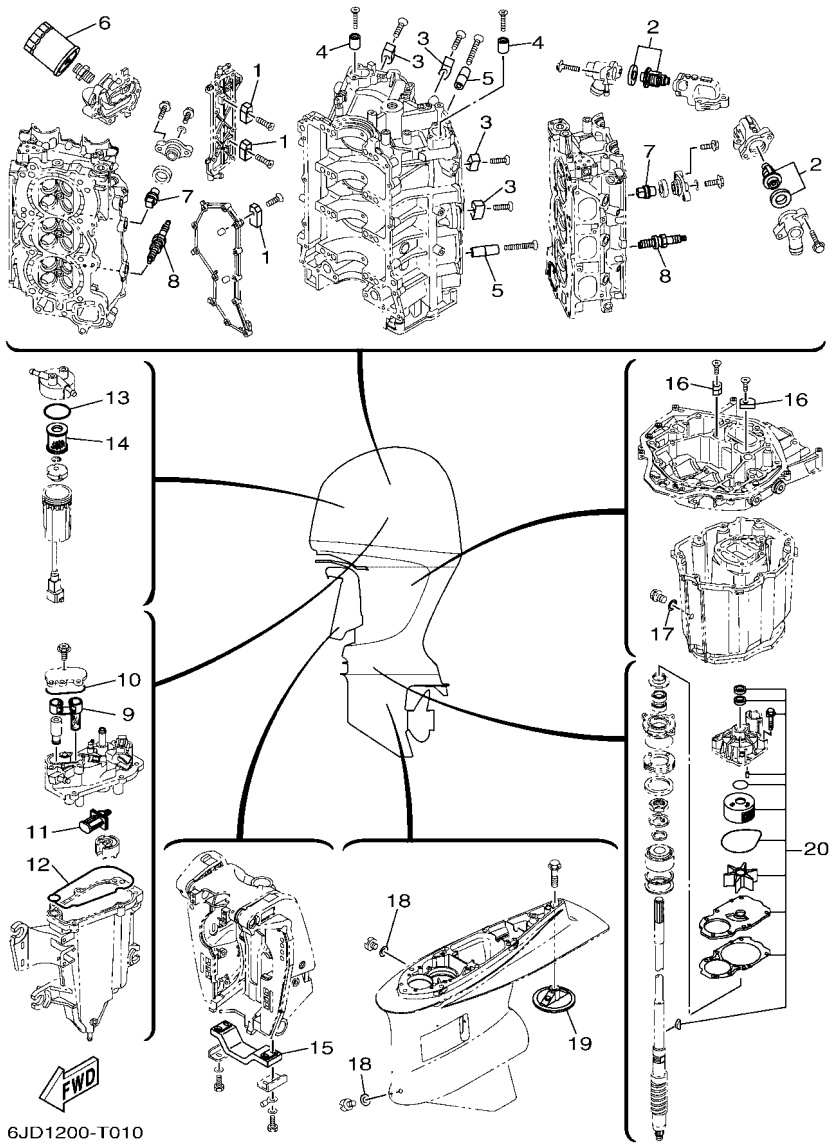

FIG. 1 SCHEDULED SERVICE PARTS — PARTES DE REPUESTO TEMPORALES

REF. NO.	PART NO. CODIGO Nº	DESCRIPTION DESCRIPCION	6JD1	6JE1				REMARKS OBSERVACIONES
1	63P–11325–01	ANODE ANODO	4	4				
2	6CE–12411–00	THERMOSTAT TERMOSTAT	2	2				
3	6AW–1132P–00	ANODE 5 ANODO 5	4	4				
4	68T–11325–00	ANODE ANODO	2	2				
5	6AW–1132N–01	ANODE 4 ANODO 4	2	2				
6	N26–13440–02	ELEMENT ASSY, OIL CLEANER ELEMENTO FILTRO DE ACEITE	1	1				
7	67F–11325–01	ANODE ANODO	8	8				
8	94702–00400	PLUG, SPARK (NGK LFR6A-11) BUJIA (NGK LFR6A-11)	6	6				
9	6CB–24501–01	FILTER, FUEL FIELTRO	1	1				
10	6CB–13016–00	O-RING ANILLO O	1	1				
11	63P–13915–00	FILTER FILTRO	1	1				
12	6CB–14984–00	GASKET, FLOAT CHAMBER EMPAQUE CAMARA DE BOIA	1	1				
13	6P3–24564–00	GASKET EMPAQUE	1	1				
14	6P3–24563–01	ELEMENT, FILTER ELEMENTO DEL FILTRO	1	1				
15	6G5–45251–02	ANODE CATODE	1	1				
16	63P–11325–11	ANODE ANODO	2	2				
17	90430–14M09	GASKET JUNTA	1	1				
18	90430–08003	GASKET JUNTA	2	2				
19	6CE–45373–00	ANODE ANODO	1	1				
20	6JD–W0078–00	WATER PUMP REPAIR KIT ESTUCHE REPARACION BOMBA AGUA	1	1				

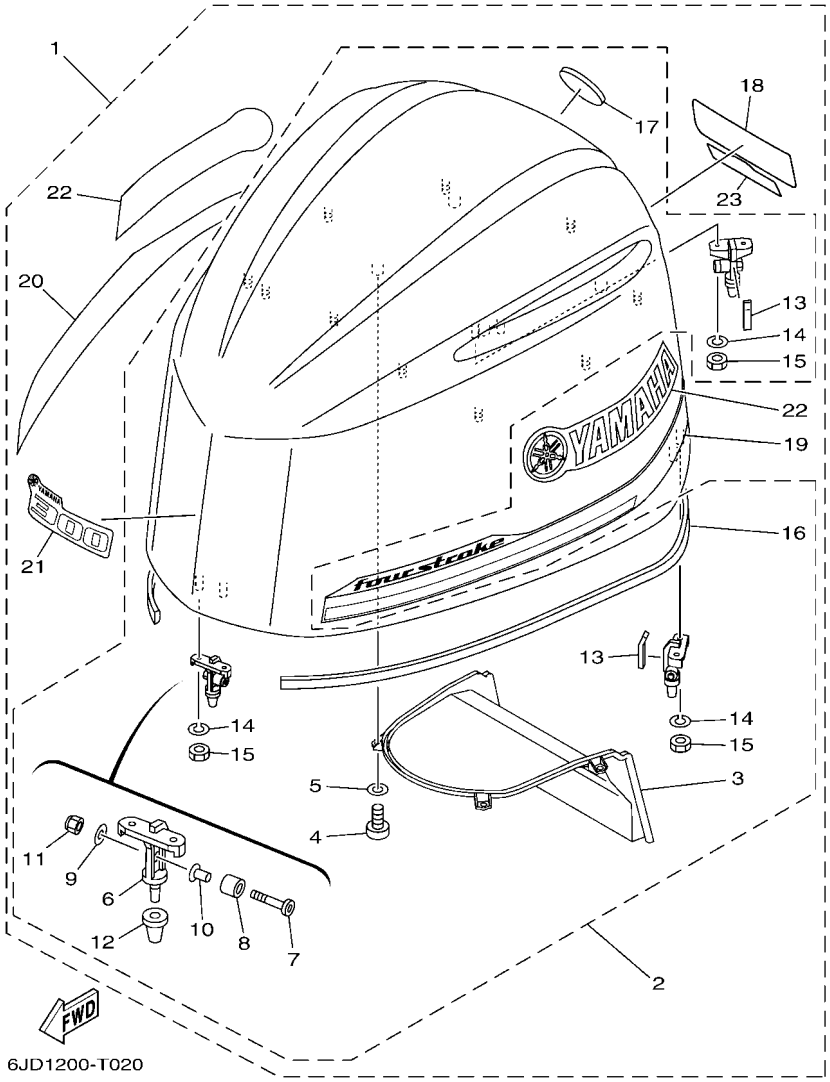

FIG. 2 TOP COWLING — SOPORTE SUPERIOR

REF. NO.	PART NO. CODIGO Nº	DESCRIPTION DESCRIPCION	6JD1	6JE1				REMARKS OBSERVACIONES
1	6JD–42610–00	TOP COWLING ASSY SOPORTE SUPERIOR COMPL.	1	1				
2	6CE–4261A–00	.TOP COWLING W/O GRAPHICS .SOPORTE SUPERIOR SIN GRAFICOS	1	1				
3	6CE–42635–00	..DUCT, WATER SEPARATOR ..CONDUCTO DE SEPARADOR AGUA	1	1				
4	97780–60516	..SCREW, TAPPING ..TORNILLO DE CABEZA DE CONO ACH	4	4				
5	92990–06200	..WASHER, PLAIN ..ARANDELA PLANA	4	4				
6	6CB–42647–A0	..HOLDER, CLAMP BAND ..MORDAZA DE ABRAZADERA	3	3				
7	90111–08078	..BOLT,HEX. SOCKET BUTTON ..TORNILLO	3	3				
8	90387–10094	..COLLAR ..ESPACIADOR	3	3				
9	92990–08600	..WASHER, PLATE ..ARANDELA PLANA	3	3				
10	90387–08M45	..COLLAR ..ESPACIADOR	3	3				
11	95780–08300	..NUT, FLANGE ..TUERCA	3	3				
12	6AW–42663–00	..DAMPER 2 ..AMORTIGUADOR 2	3	3				
13	6CB–42134–00	..COVER ..CUBIERTA	2	2				
14	92990–06100	..WASHER, SPRING ..ARANDELA PLANA	6	6				
15	95380–06600	..NUT, HEXAGON ..TUERCA	6	6				
16	6CB–42628–00	..SEAL ..SELLO DE GOMA	1	1				
17	6AW–42697–10	..TUNING FORK MARK ..MARCA, YAMAHA	1	1				
18	6JD–42678–00	.GRAPHIC, REAR .CALCAMONIA TRASERA	1	1				
19	6JD–42675–00	.GRAPHIC, SIDE 1 .CALCAMONIA LATERAL 1	1	1				
20	6JD–42676–00	.GRAPHIC, SIDE 2 .CALCAMONIA LATERAL 2	1	1				
21	6JD–42677–00	.GRAPHIC, FRONT .CALCAMONIA FRONTAL	1	1				
22	6JD–42681–00	.MARK, COWLING .MARCA DE CUBIERTA	2	2				
23	6S1–4267A–00	.GRAPHIC, REAR 2 .CALCAMONIA TRASERA 2	1	1				

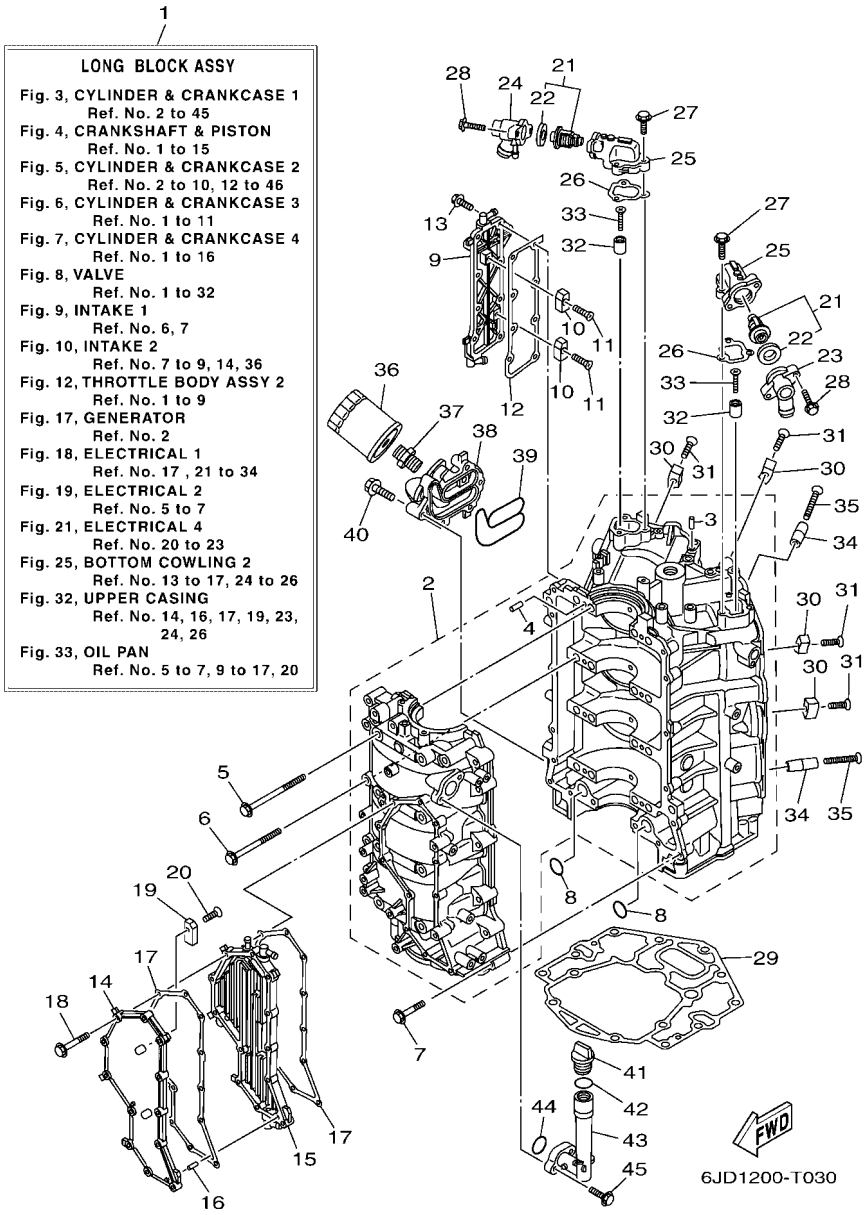

FIG. 3 CYLINDER & CRANKCASE 1 — CILINDRO & CARTER 1

REF. NO.	PART NO. CODIGO Nº	DESCRIPTION DESCRIPCION	6JD1	6JE1				REMARKS OBSERVACIONES
1	6JD–11000–00	LONG BLOCK ASSY SUBENSAMBLAJE DEL MOTOR	1	1				
2	6CE–15100–10	CRANKCASE ASSY CARTER COMPLETO	1	1				
3	93606–12019	.PIN, DOWEL .PASADOR DE CLAVIJA	3	3				
4	93606–12019	.PIN, DOWEL .PASADOR DE CLAVIJA	8	8				
5	6CB–15187–00	BOLT PERNO	8	8				
6	6CB–15481–00	BOLT 1 PERNO 1	8	8				
7	90105–08175	BOLT, FLANGE TORNILLO	16	16				
8	93210–26658	O-RING ANILLO O	2	2				
9	6CE–1131C–00–9S	COVER, JOINT CUBIERTA DE UNION	1	1				
10	63P–11325–01	ANODE ANODO	2	2				
11	90151–06M02	SCREW, COUNTERSUNK TORNILLO EMBUTIDO	2	2				
12	6CB–1131B–00	GASKET, COVER EMPAQUE DE CUBIERTA	1	1				
13	90105–06M07	BOLT, FLANGE TORNILLO	8	8				
14	6CE–15411–00–9S	COVER, CRANKCASE 1 CUBIERTA DE CARTER 1	1	1				
15	6CE–15421–10–9S	COVER, CRANKCASE 2 TAPA DE CARTER DERECHA	1	1				
16	91690–40010	PIN, SPRING PASADOR DE RESORTE	1	1				
17	6CB–15451–01	GASKET, CRANKCASE COVER 1 EMPAQ DE CUBIERTA DE CARTER	2	2				
18	90105–06151	BOLT, FLANGE TORNILLO	12	12				
19	63P–11325–01	ANODE ANODO	2	2				
20	90151–06M02	SCREW, COUNTERSUNK TORNILLO EMBUTIDO	2	2				
21	6CE–12411–00	THERMOSTAT TERMOSTAT	2	2				
22	67F–12412–00	.SEAL, THERMOSTAT .SELLO TERMOSTATO	1	1				
23	6CE–12413–B0–9S	COVER, THERMOSTAT CUBIERTA TERMOSTATO	1	1				
24	6CE–12413–A0–9S	COVER, THERMOSTAT CUBIERTA TERMOSTATO	1	1				
25	6CB–12422–10–9S	COVER, HOUSING CUBIERTA DE CAJA	2	2				
26	6CB–12427–11	GASKET, HOUSING COVER 1 EMPAQUE DE TAPA	2	2				
27	95027–06025	BOLT, FLANGE PERNO, DE BRIDA	6	6				

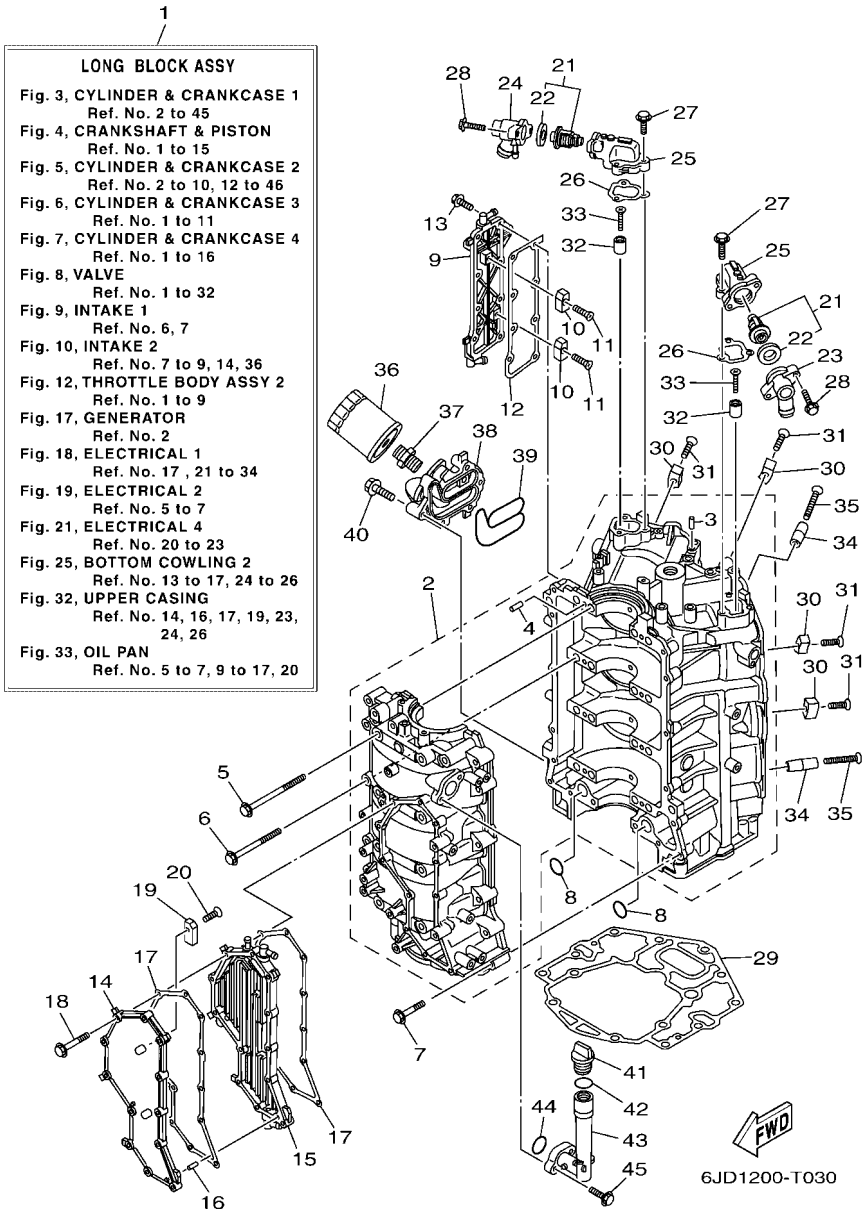

FIG. 3 CYLINDER & CRANKCASE 1 — CILINDRO & CARTER 1

REF. NO.	PART NO. CODIGO Nº	DESCRIPTION DESCRIPCION	6JD1	6JE1				REMARKS OBSERVACIONES
28	90105–06037	BOLT, FLANGE TORNILLO	4	4				
29	6CB–11351–00	GASKET, CYLINDER JUNTA, DE CILINDRO	1	1				
30	6AW–1132P–00	ANODE 5 ANODO 5	4	4				
31	98780–06530	SCREW, FLAT HEAD TORNILLO CABEZA PLANA	4	4				
32	68T–11325–00	ANODE ANODO	2	2				
33	90151–05M05	SCREW, COUNTERSUNK TORNILLO EMBUTIDO	2	2				
34	6AW–1132N–01	ANODE 4 ANODO 4	2	2				
35	98780–06550	SCREW, FLAT HEAD TORNILLO CABEZA PLANA	2	2				
36	N26–13440–02	ELEMENT ASSY, OIL CLEANER ELEMENTO FILTRO DE ACEITE	1	1				
37	90401–19001	BOLT, UNION PERNO DE UNION	1	1				
38	6CE–13446–10–9S	CONNECTOR CONECTOR	1	1				
39	6CB–13477–00	GASKET EMPAQUE	1	1				
40	90105–06151	BOLT, FLANGE TORNILLO	5	5				
41	6G8–15363–00	PLUG, OIL TAPON DE ACEITE	1	1				
42	93210–24M79	O-RING ANILLO O	1	1				
43	6CB–15319–00	JOINT CONECTOR	1	1				
44	93210–27370	O-RING ANILLO O	1	1				
45	90105–06037	BOLT, FLANGE TORNILLO	2	2				

FIG. 4 CRANKSHAFT & PISTON — CIGUENAL & PISTON

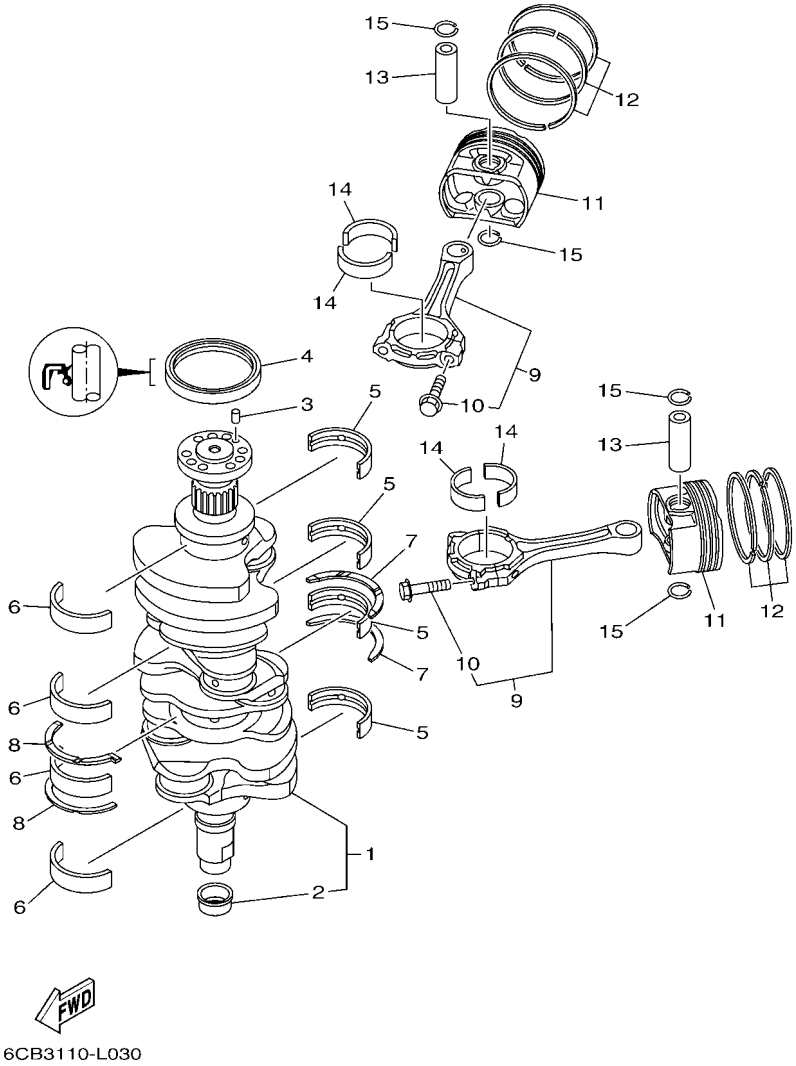

REF. NO.	PART NO. CODIGO Nº	DESCRIPTION DESCRIPCION	6JD1	6JE1				REMARKS OBSERVACIONES
1	6CB–11410–00	CRANKSHAFT CIGUENAL	1	1				
2	6CB–11478–00	.COLLAR .COLLAR	1	1				
3	93606–12019	PIN, DOWEL PASADOR DE CLAVIJA	1	1				
4	93102–85008	OIL SEAL SELLO ACEITE	1	1				
5	6CB–11416–00	PLANE BEARING, CRANKSHAFT 1 COJINETE PLANO 1	4	4				UR PURPLE UR PURPLE
	6CB–11416–10	PLANE BEARING, CRANKSHAFT 1 COJINETE PLANO 1	4	4				UR YELLOW UR YELLOW
	6CB–11416–20	PLANE BEARING, CRANKSHAFT 1 COJINETE PLANO 1	4	4				UR RED UR RED
	6CB–11416–30	PLANE BEARING, CRANKSHAFT 1 COJINETE PLANO 1	4	4				UR GREEN UR GREEN
	6CB–11416–40	PLANE BEARING, CRANKSHAFT 1 COJINETE PLANO 1	4	4				UR BROWN UR BROWN
6	6CB–11417–00	PLANE BEARING, CRANKSHAFT 2 COJINETE PLANO 2	4	4				UR PURPLE UR PURPLE
	6CB–11417–10	PLANE BEARING, CRANKSHAFT 2 COJINETE PLANO 2	4	4				UR YELLOW UR YELLOW
	6CB–11417–20	PLANE BEARING, CRANKSHAFT 2 COJINETE PLANO 2	4	4				UR RED UR RED
	6CB–11417–30	PLANE BEARING, CRANKSHAFT 2 COJINETE PLANO 2	4	4				UR GREEN UR GREEN
	6CB–11417–40	PLANE BEARING, CRANKSHAFT 2 COJINETE PLANO 2	4	4				UR BROWN UR BROWN
7	6CB–11426–03	BEARING, THRUST 1 COJINETE DE EMPUJE 1	2	2				
8	6CB–11427–03	BEARING, THRUST 2 COJINETE DE EMPUJE 2	2	2				
9	6CB–W1165–00	CONNECTING ROD ASSY BIELA COMPLETA	6	6				
10	6CB–11654–00	.BOLT, CONNECTING ROD .TORNILLO DE BIELA	2	2				
11	6CE–11631–02	PISTON (STD) PISTON (NORMA)	6	6				
12	6GR–11603–00	PISTON RING SET (STD) JUEGO DE ANILLOS (NORMA)	6	6				
13	6CB–11633–00	PIN, PISTON PASADOR, PISTON	6	6				
14	6CB–11656–00	PLANE BEARING, CONNECTING ROD COJINETE PLANO	12	12				UR YELLOW UR YELLOW
	6CB–11656–10	PLANE BEARING, CONNECTING ROD COJINETE PLANO	12	12				UR GREEN UR GREEN
	6CB–11656–20	PLANE BEARING, CONNECTING ROD COJINETE PLANO	12	12				UR BLUE UR BLUE
15	K0F–A3233–00	RING,HOLE SNAP PRESILLA	12	12				

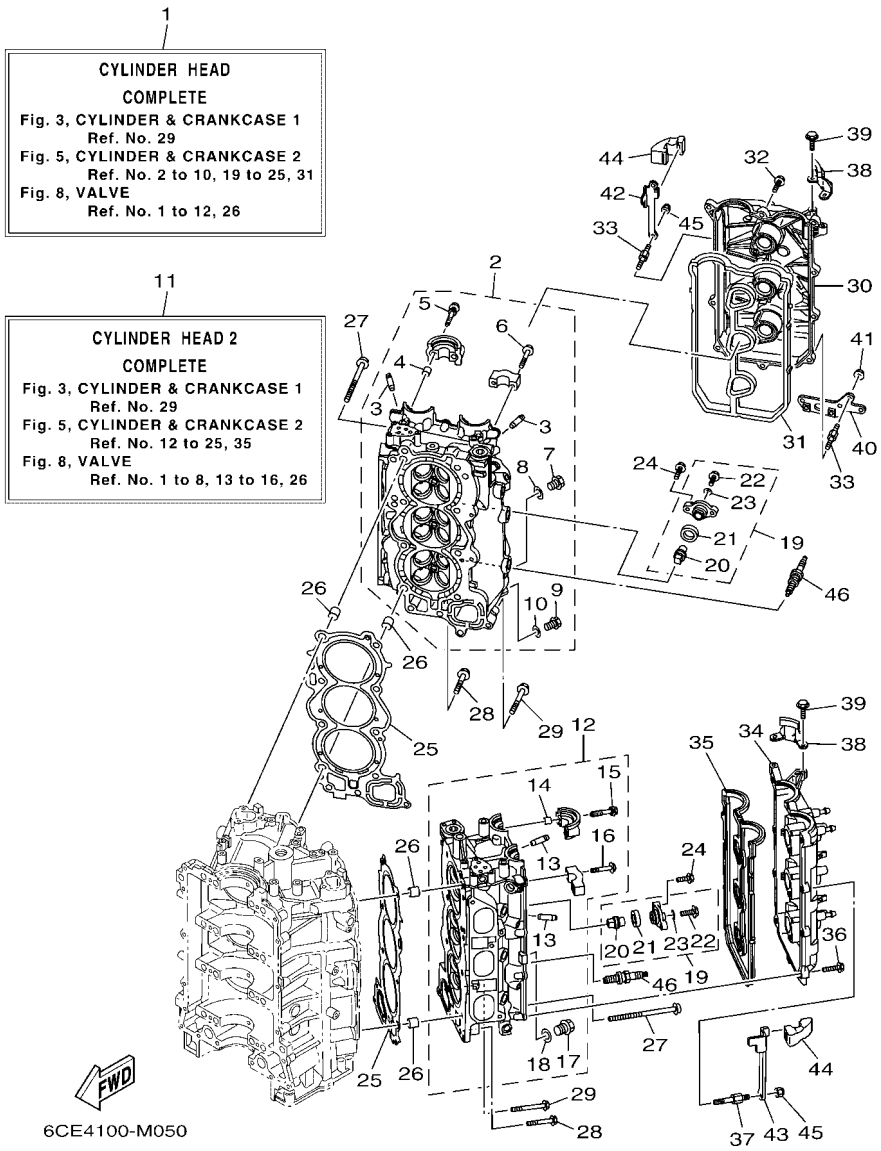

FIG. 5 CYLINDER & CRANKCASE 2 — CILINDRO & CARTER 2

REF. NO.	PART NO. CODIGO Nº	DESCRIPTION DESCRIPCION	6JD1	6JE1				REMARKS OBSERVACIONES
1	6JD–W009A–00–9S	CYLINDER HEAD COMPLETE CILINDRD CULATA COMPLETO	1	1				
2	6CE–11110–12–9S	CYLINDER HEAD ASSY CULATA DE CILINDRO COMPLETA	1	1				
3	6S5–11133–10	.GUIDE, VALVE 1 .GUIA DE VALVULA 1	12	12				
4	91809–08006	.PIN, DOWEL .PASADOR DE CLAVIJA	4	4				
5	90119–07001	.BOLT, WITH WASHER .TORNILLO CON ARANDELA	4	4				
6	90119–07234	.BOLT, WITH WASHER .TORNILLO CON ARANDELA	12	12				
7	90340–18M09	.PLUG, STRAIGHT SCREW .TORNILLO, DE DRENAJE	1	1				
8	90201–186F1	.WASHER, PLATE .ARANDELA PLANA	1	1				
9	90340–14M06	.PLUG, STRAIGHT SCREW .TORNILLO, DE DRENAJE	1	1				
10	90430–14115	.GASKET .JUNTA	1	1				
11	6JD–W009C–00–9S	CYLINDER HEAD 2 COMPLETE CULATA DE CILINDRO COMPL. 2	1	1				
12	6CE–11120–12–9S	CYLINDER HEAD ASSY 2 CULATA DE CILINDRO COMPL. 2	1	1				
13	6S5–11133–10	.GUIDE, VALVE 1 .GUIA DE VALVULA 1	12	12				
14	91809–08006	.PIN, DOWEL .PASADOR DE CLAVIJA	4	4				
15	90119–07001	.BOLT, WITH WASHER .TORNILLO CON ARANDELA	4	4				
16	90119–07234	.BOLT, WITH WASHER .TORNILLO CON ARANDELA	12	12				
17	90340–18M09	.PLUG, STRAIGHT SCREW .TORNILLO, DE DRENAJE	1	1				
18	90201–186F1	.WASHER, PLATE .ARANDELA PLANA	1	1				
19	67F–11301–00	ANODE COVER ASSY CONJUNTO CUBIERTA DE ANODO	8	8				
20	67F–11325–01	.ANODE .ANODO	1	1				
21	67F–11328–00	.GROMMET, ANODE .TAPON	1	1				
22	90105–06M07	.BOLT, FLANGE .TORNILLO	1	1				
23	90430–06M03	.GASKET .JUNTA	1	1				
24	95D95–08025	BOLT, FLANGE DEEP RECESS CERROJO, REBORDE HUECO PROFUND	16	16				
25	6CB–11181–00	GASKET, CYLINDER HEAD 1 JUNTA, DE CULATA 1	2	2				
26	90387–11005	COLLAR ESPACIADOR	4	4				
27	90149–11001	SCREW TORNILLO DE REGLAJE	16	16				

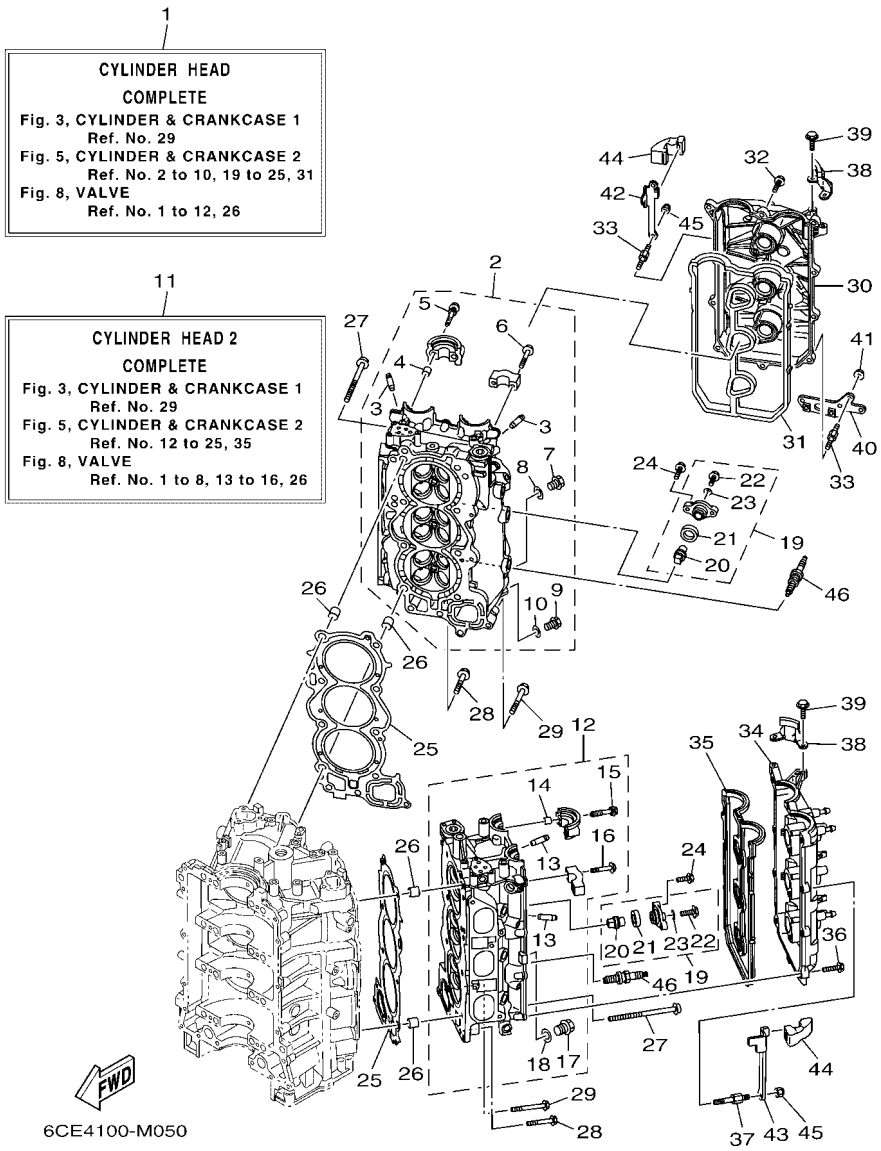

FIG. 5 CYLINDER & CRANKCASE 2 — CILINDRO & CARTER 2

REF. NO.	PART NO. CODIGO Nº	DESCRIPTION DESCRIPCION	6JD1	6JE1				REMARKS OBSERVACIONES
28	90105–08175	BOLT, FLANGE TORNILLO	4	4				
29	90105–08220	BOLT, FLANGE TORNILLO	2	2				
30	6CB–11191–02	COVER, CYLINDER HEAD 1 TAPA CULATA DE CILINDRO 1	1	1				
31	6CB–11193–00	GASKET, HEAD COVER 1 EMPAQUE	1	1				
32	95D95–06030	BOLT, FLANGE DEEP RECESS CERROJO, REBORDE HUECO PROFUND	9	9				
33	90109–06277	BOLT PERNO	4	4				
34	6CB–11192–02	COVER, CYLINDER HEAD 2 TAPA CULATA DE CILINDRO 2	1	1				
35	6CB–11194–00	GASKET, HEAD COVER 2 EMPAQUE DE TAPA DE CULATA 2	1	1				
36	95D95–06030	BOLT, FLANGE DEEP RECESS CERROJO, REBORDE HUECO PROFUND	11	11				
37	90109–06277	BOLT PERNO	2	2				
38	6AW–15142–00	GUIDE 1 GUIA 1.	2	2				
39	95D95–06014	BOLT, FLANGE DEEP RECESS CERROJO, REBORDE HUECO PROFUND	4	4				
40	6CB–2134V–00	BRACKET SOPORTE	1	1				
41	90179–06M28	NUT TUERCA	2	2				
42	6CB–11998–00	BRACKET 1 SOPORTE 1	1	1				
43	6CB–11999–00	BRACKET 2 SOPORTE 2	1	1				
44	6CB–42662–00	DAMPER AMORTIGUADOR	2	2				
45	90185–06M07	NUT, SELF-LOCKING TUERCA AUTOBLOCANTE	4	4				
46	94702–00400	PLUG, SPARK (NGK LFR6A-11) BUJIA (NGK LFR6A-11)	6	6				

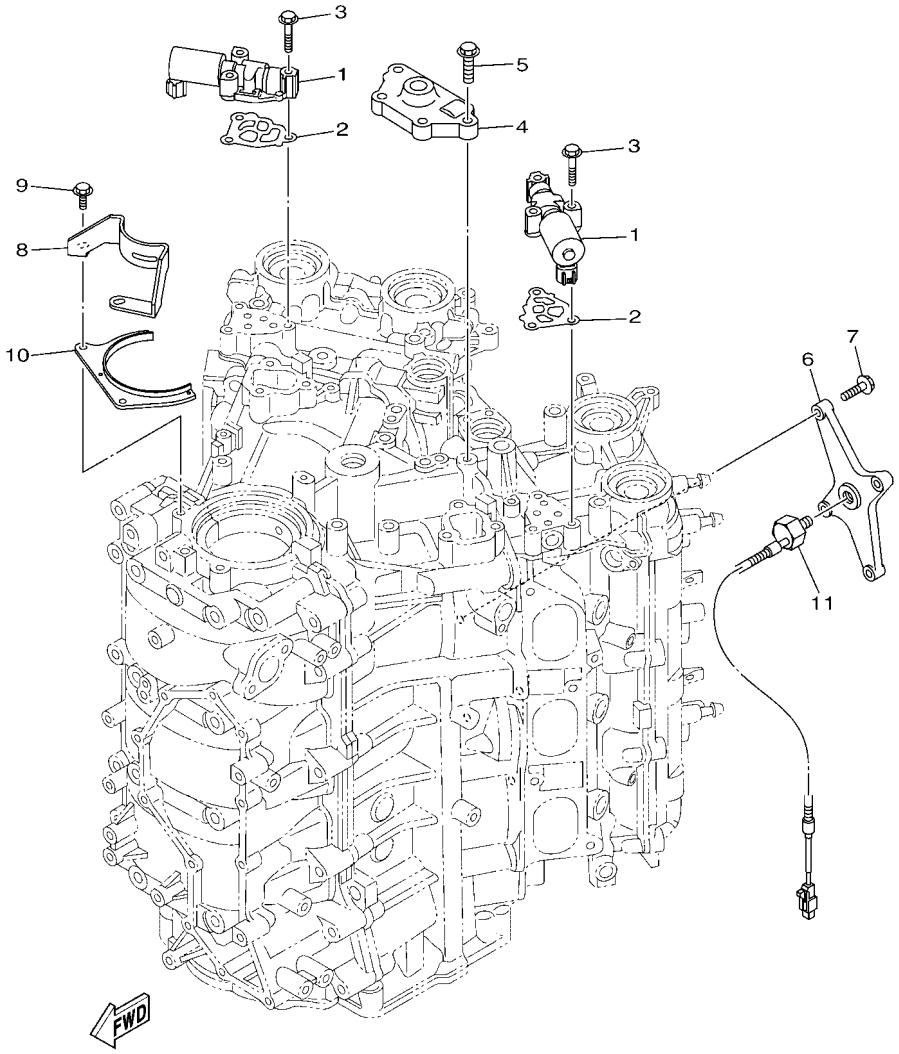

6CD6100-N060

FIG. 6 CYLINDER & CRANKCASE 3 — CILINDRO & CARTER 3

REF. NO.	PART NO. CODIGO Nº	DESCRIPTION DESCRIPCION	6JD1	6JE1				REMARKS OBSERVACIONES
1	6CB–86120–00	SOLENOID VALVE ASSY VALVULA SOLENOIDE CONJ.	2	2				
2	6CB–1242F–00	GASKET, FILTER EMPAQUE DE FILTRO	2	2				
3	90105–06035	BOLT, FLANGE TORNILLO	6	6				
4	6CB–15544–00	STAY 1 SOPORTE 1	1	1				
5	90105–08178	BOLT, FLANGE TORNILLO	4	4				
6	6CB–1135A–00	BRACKET SOPORTE	1	1				
7	90105–06037	BOLT, FLANGE TORNILLO	4	4				
8	6CB–15142–00	GUIDE 1 GUIA 1.	1	1				
9	95D95–06016	BOLT, FLANGE DEEP RECESS CERROJO, REBORDE HUECO PROFUND	2	2				
10	6CB–1149A–00	PLATE 1 FLACA 1	1	1				
11	6P2–85780–00	SENSOR, KNOCK CHOCAR SENSORIO	1	1				

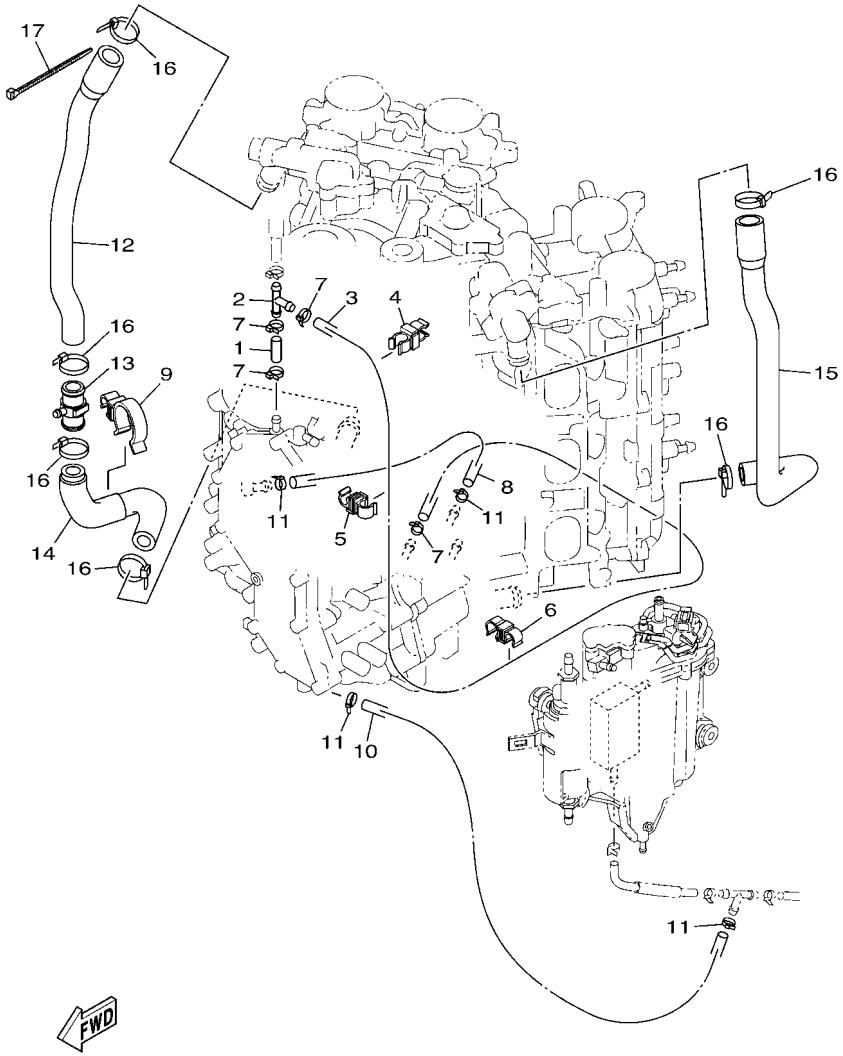

6JD1200-T070

FIG. 7 CYLINDER & CRANKCASE 4 — CILINDRO & CARTER 4

REF. NO.	PART NO. CODIGO Nº	DESCRIPTION DESCRIPCION	6JD1	6JE1				REMARKS OBSERVACIONES
1	90445–09220	HOSE (L30) TUBO (L30)	1	1				
2	688–24378–00	PIPE, JOINT 3 TUBO DE UNION 3	1	1				
3	6CB–12576–10	HOSE 1 MANGUERA 1	1	1				
4	90464–10M59	CLAMP BRIDA	1	1				
5	90464–09013	CLAMP BRIDA	1	1				
6	90464–12010	CLAMP BRIDA	1	1				
7	90465–11M10	CLAMP BRIDA	4	4				
8	6CB–12577–00	HOSE 2 MANGUERA 2	1	1				
9	90464–26002	CLAMP BRIDA	1	1				
10	90445–096H2	HOSE (L280) TUBO (L280)	1	1				
11	90465–11M10	CLAMP BRIDA	4	4				
12	6CE–1244G–00	HOSE, 4 MANGUERA 4	1	1				
13	6CE–24378–00	PIPE, JOINT 3 TUBO DE UNION 3	1	1				
14	6CE–1244H–00	HOSE 5 TUBO 5	1	1				
15	6CB–1243E–00	HOSE 2 TUBO 2	1	1				
16	90465–11M59	CLAMP BRIDA	6	6				
17	90465–14M66	CLAMP BRIDA	1	1				

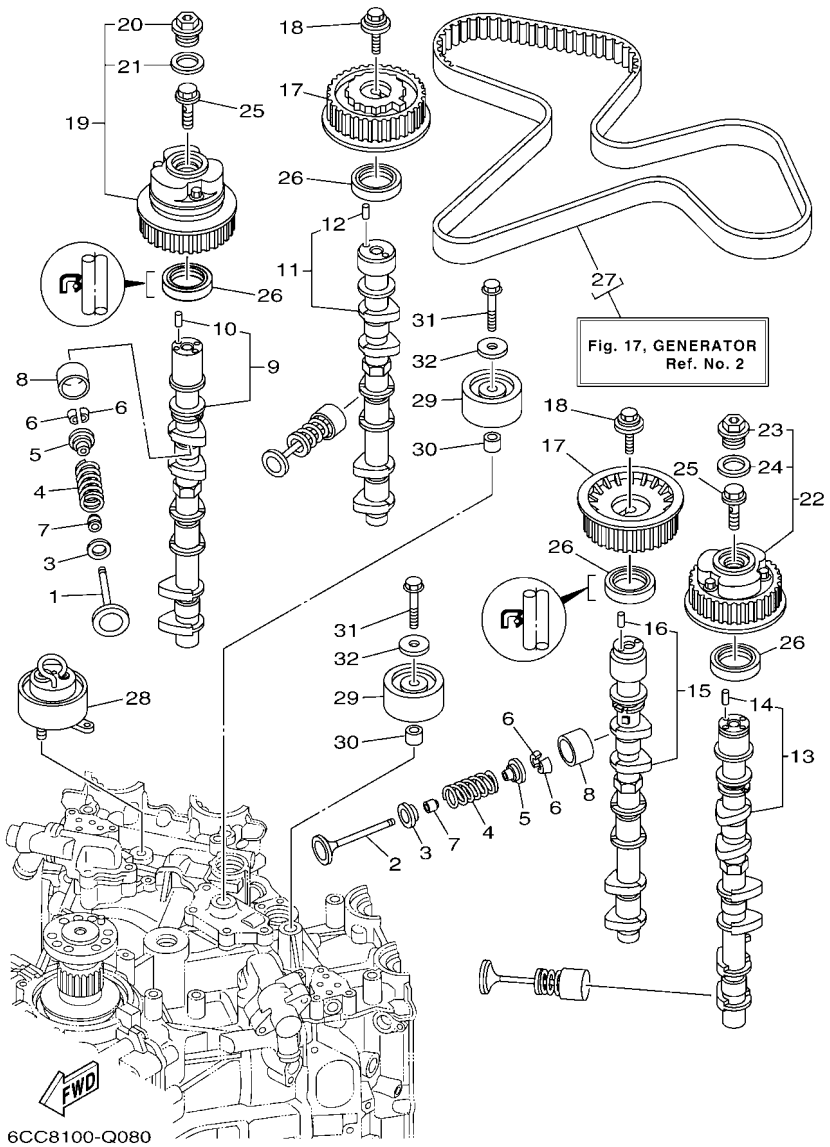

FIG. 8 VALVE — VALVULA

REF. NO.	PART NO. CODIGO Nº	DESCRIPTION DESCRIPCION	6JD1	6JE1				REMARKS OBSERVACIONES
1	6CB–12111–00	VALVE, INTAKE VALVULA DE ADMISION	12	12				
2	6JD–12121–00	VALVE, EXHAUST VALVULA DE ESCAPE	12	12				
3	K0F–A3743–00	SEAT, VALVE SPRING ASIENTO RESORTE DE VALVULA	24	24				
4	6CB–12113–00	SPRING, VALVE INNER RESORTE VALVULA INTERNA	24	24				
5	K0F–A3741–00	RETAINER, VALVE SPRING RETEN RESORTE DE VALVULA	24	24				
6	K0F–A3742–00	LOCK, VALVE SPRING RETAINER SEGURO DE VALVULA	48	48				
7	51Y–12119–00	SEAL, VALVE STEM SELLO DE ACEITE VALVULA	24	24				
8	K0F–A3751–00	LIFTER, VALVE (3.000) LEVANTADOR DE VALVULA (3.000)	24	24				UR UR
	K0F–A3751–10	LIFTER, VALVE (3.025) LEVANTADOR DE VALVULA (3.025)	24	24				UR UR
	K0F–A3751–20	LIFTER, VALVE (3.050) LEVANTADOR DE VALVULA (3.050)	24	24				UR UR
	K0F–A3751–30	LIFTER, VALVE (3.075) LEVANTADOR DE VALVULA (3.075)	24	24				UR UR
	K0F–A3751–40	LIFTER, VALVE (3.100) LEVANTADOR DE VALVULA (3.100)	24	24				UR UR
	K0F–A3751–50	LIFTER, VALVE (3.122) LEVANTADOR DE VALVULA (3.122)	24	24				UR UR
	K0F–A3751–60	LIFTER, VALVE (3.142) LEVANTADOR DE VALVULA (3.142)	24	24				UR UR
	K0F–A3751–70	LIFTER, VALVE (3.162) LEVANTADOR DE VALVULA (3.162)	24	24				UR UR
	K0F–A3751–80	LIFTER, VALVE (3.182) LEVANTADOR DE VALVULA (3.182)	24	24				UR UR
	K0F–A3751–90	LIFTER, VALVE (3.202) LEVANTADOR DE VALVULA (3.202)	24	24				UR UR
	K0F–A3751–A0	LIFTER, VALVE (3.222) LEVANTADOR DE VALVULA (3.222)	24	24				UR UR
	K0F–A3751–B0	LIFTER, VALVE (3.242) LEVANTADOR DE VALVULA (3.242)	24	24				UR UR
	K0F–A3751–C0	LIFTER, VALVE (3.262) LEVANTADOR DE VALVULA (3.262)	24	24				UR UR
	K0F–A3751–D0	LIFTER, VALVE (3.282) LEVANTADOR DE VALVULA (3.282)	24	24				UR UR
	K0F–A3751–E0	LIFTER, VALVE (3.302) LEVANTADOR DE VALVULA (3.302)	24	24				UR UR
	K0F–A3751–F0	LIFTER, VALVE (3.322) LEVANTADOR DE VALVULA (3.322)	24	24				UR UR
	K0F–A3751–G0	LIFTER, VALVE (3.342) LEVANTADOR DE VALVULA (3.342)	24	24				UR UR
	K0F–A3751–H0	LIFTER, VALVE (3.362) LEVANTADOR DE VALVULA (3.362)	24	24				UR UR
	K0F–A3751–J0	LIFTER, VALVE (3.382) LEVANTADOR DE VALVULA (3.382)	24	24				UR UR
	K0F–A3751–K0	LIFTER, VALVE (3.402) LEVANTADOR DE VALVULA (3.402)	24	24				UR UR

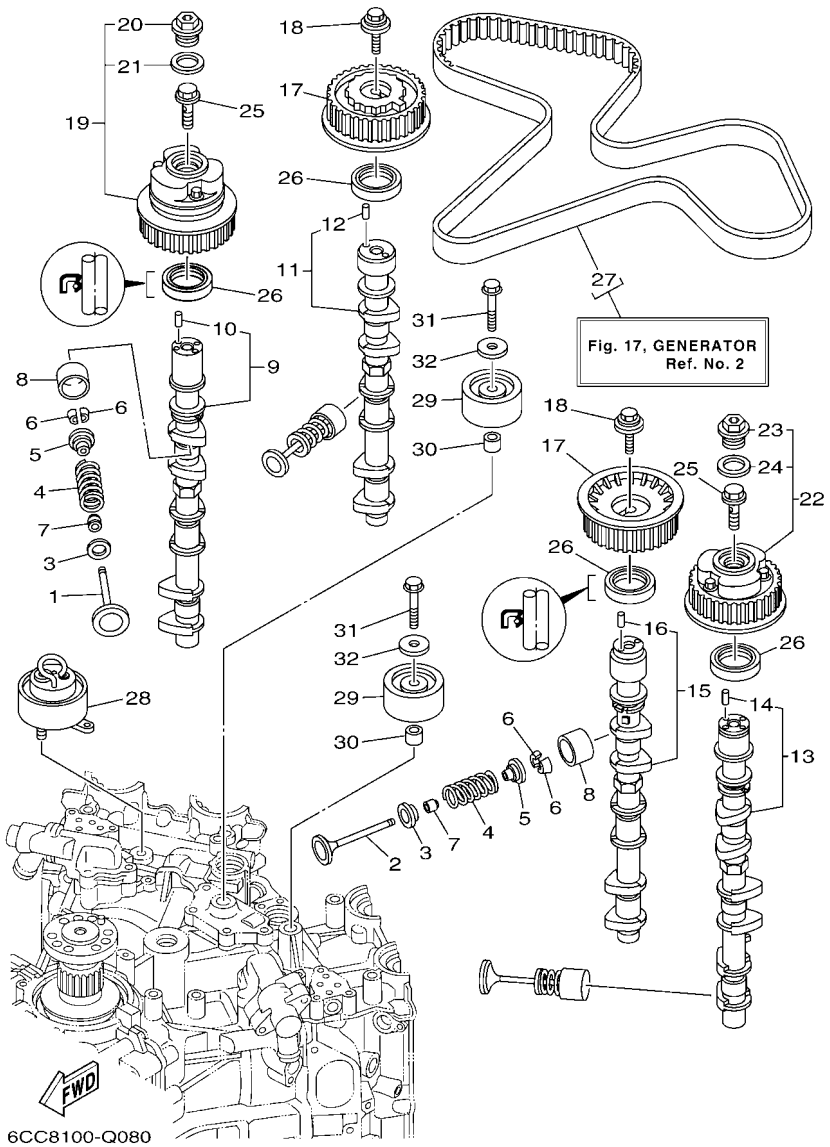

FIG. 8 VALVE VALVULA

REF. NO.	PART NO. CODIGO Nº	DESCRIPTION DESCRIPCION	6JD1	6JE1				REMARKS OBSERVACIONES
8	K0F–A3751–L0	LIFTER, VALVE (3.422) LEVANTADOR DE VALVULA (3.422)	24	24				UR UR
	K0F–A3751–M0	LIFTER, VALVE (3.442) LEVANTADOR DE VALVULA (3.442)	24	24				UR UR
	K0F–A3751–N0	LIFTER, VALVE (3.462) LEVANTADOR DE VALVULA (3.462)	24	24				UR UR
	K0F–A3751–P0	LIFTER, VALVE (3.482) LEVANTADOR DE VALVULA (3.482)	24	24				UR UR
	K0F–A3751–R0	LIFTER, VALVE (3.502) LEVANTADOR DE VALVULA (3.502)	24	24				UR UR
	K0F–A3751–S0	LIFTER, VALVE (3.522) LEVANTADOR DE VALVULA (3.522)	24	24				UR UR
	K0F–A3751–T0	LIFTER, VALVE (3.542) LEVANTADOR DE VALVULA (3.542)	24	24				UR UR
	K0F–A3753–00	LIFTER, VALVE (3.562) LEVANTADOR DE VALVULA (3.562)	24	24				UR UR
	K0F–A3753–10	LIFTER, VALVE (3.582) LEVANTADOR DE VALVULA (3.582)	24	24				UR UR
	K0F–A3753–20	LIFTER, VALVE (3.602) LEVANTADOR DE VALVULA (3.602)	24	24				UR UR
	K0F–A3753–30	LIFTER, VALVE (3.625) LEVANTADOR DE VALVULA (3.625)	24	24				UR UR
	K0F–A3753–40	LIFTER, VALVE (3.650) LEVANTADOR DE VALVULA (3.650)	24	24				UR UR
	K0F–A3753–50	LIFTER, VALVE (3.675) LEVANTADOR DE VALVULA (3.675)	24	24				UR UR
	K0F–A3753–60	LIFTER, VALVE (3.700) LEVANTADOR DE VALVULA (3.700)	24	24				UR UR
	K0F–A3753–70	LIFTER, VALVE (3.725) LEVANTADOR DE VALVULA (3.725)	24	24				UR UR
9	6CB–12171–00	CAMSHAFT 1 ARBOL DE LEVAS 1	1	1				
10	93605–10108	.PIN, DOWEL .PASADOR DE CLAVIJA	1	1				
11	6CB–12181–00	CAMSHAFT 2 ARBOL DE LEVAS 2	1	1				
12	93605–10108	.PIN, DOWEL .PASADOR DE CLAVIJA	1	1				
13	6CB–12172–00	CAMSHAFT 3 ARBOL DE LEVAS 3	1	1				
14	93605–10108	.PIN, DOWEL .PASADOR DE CLAVIJA	1	1				
15	6CB–12182–00	CAMSHAFT 4 ARBOL DE LEVAS 4	1	1				
16	93605–10108	.PIN, DOWEL .PASADOR DE CLAVIJA	1	1				
17	6CB–11567–00	GEAR, DRIVEN 2 ENGRANAJE TRACCION 2	2	2				
18	90119–10050	BOLT, WITH WASHER TORNILLO CON ARANDELA	2	2				
19	6CB–12645–01	PULLEY ASSY 1 POLEA COMPL. 1	1	1				
20	6P2–12623–00	.BOLT .PERNO	1	1				

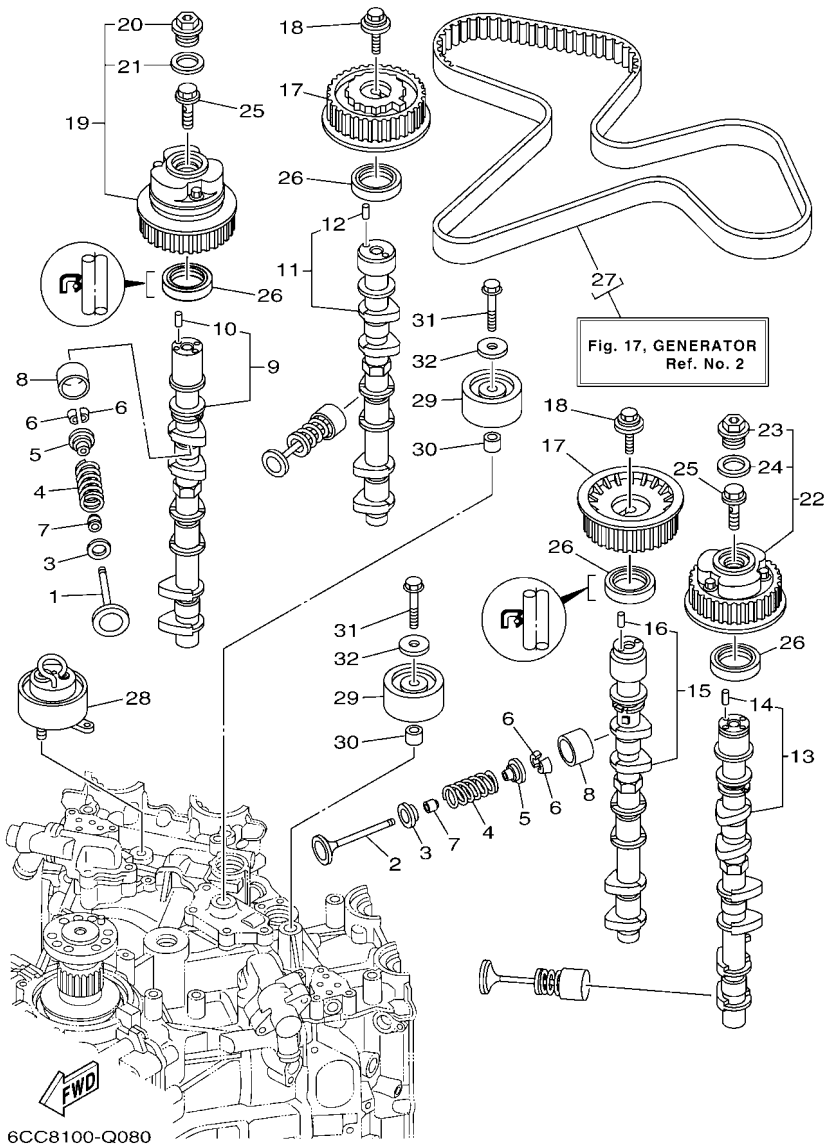

FIG. 8 VALVE — VALVULA

REF. NO.	PART NO. CODIGO Nº	DESCRIPTION DESCRIPCION	6JD1	6JE1				REMARKS OBSERVACIONES
21	6P2–12663–00	.GASKET .EMPAQUE	1	1				
22	6CB–1264A–01	PULLEY ASSY 2 POLEA COMPL. 2	1	1				
23	6P2–12623–00	.BOLT .PERNO	1	1				
24	6P2–12663–00	.GASKET .EMPAQUE	1	1				
25	6P2–12615–00	BOLT PERNO	2	2				
26	93102–38008	OIL SEAL SELLO ACEITE	4	4				
27	6CB–W4624–00	BELT (WITH ROTOR BOLTS) CORREA (CON PERNO)	1	1				
28	6CB–11590–02	TENSIONER ASSY TENSOR COMPLET	1	1				
29	6CB–15512–00	GEAR, IDLER 1 ENGRENAJE NEUTRO	2	2				
30	99530–14016	PIN, DOWEL PASADOR, DE ESPIGA	2	2				
31	90119–10M07	BOLT, WITH WASHER TORNILLO CON ARANDELA	2	2				
32	90201–10M01	WASHER, PLATE ARANDELA PLANA	2	2				

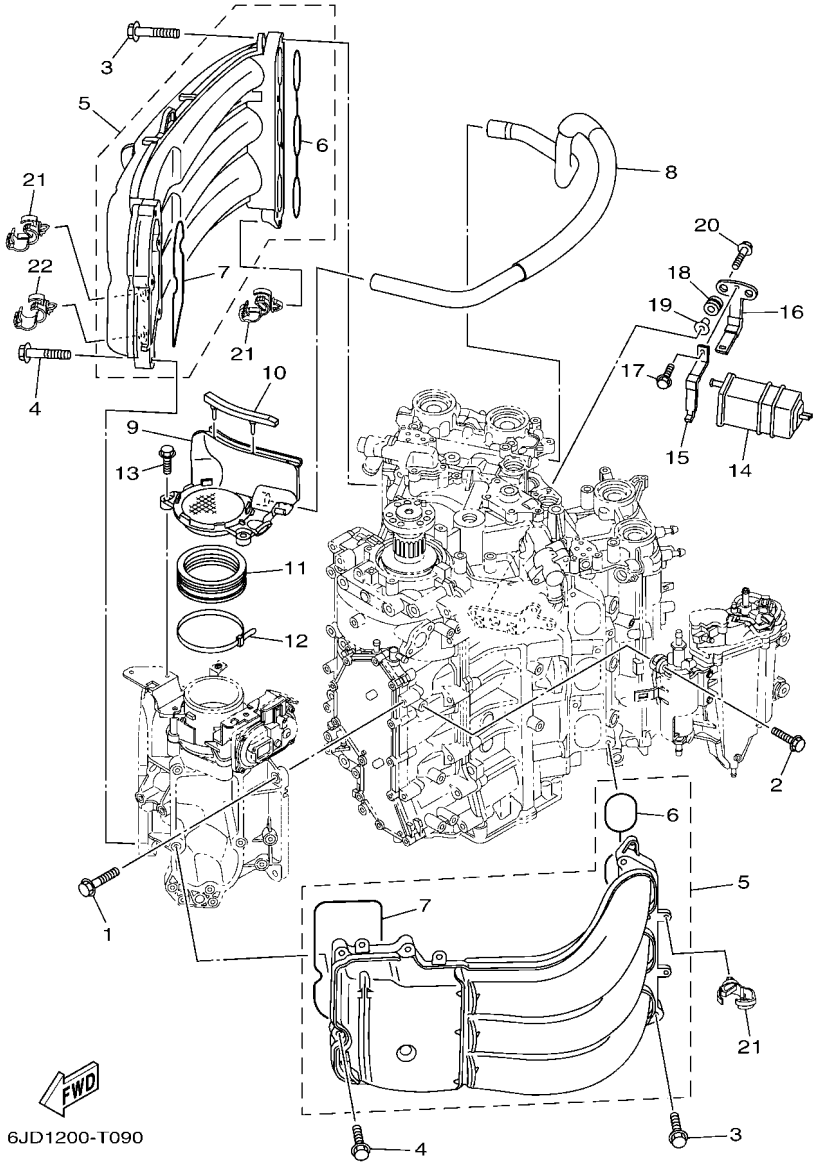

FIG. 9 INTAKE 1 — ADMISION 1

REF. NO.	PART NO. CODIGO Nº	DESCRIPTION DESCRIPCION	6JD1	6JE1				REMARKS OBSERVACIONES
1	95D75–08030	BOLT, FLANGE DEEP RECESS CERROJO, REBORDE HUECO PROFUND	4	4				
2	90119–06269	BOLT, WITH WASHER TORNILLO CON ARANDELA	4	4				
3	90119–08020	BOLT, WITH WASHER TORNILLO CON ARANDELA	8	8				
4	90105–06035	BOLT, FLANGE TORNILLO	10	10				
5	6CE–13641–00	MANIFOLD, INTAKE 1 CONECTOR DE ADMISSION 1	2	2				
6	6CB–13645–00	.GASKET, MANIFOLD 1 .EMPAQUE	1	1				
7	6CB–13646–00	.GASKET, MANIFOLD 2 .EMPAQ. DE MULTIPLE 2	1	1				
8	6CB–15373–01	PIPE, BREATHER MANGUELA DE RESPIRADERO	1	1				
9	6CB–14440–01	SILENCER ASSY, INTAKE SILENCIADOR COMPL DE ADMISION	1	1				
10	6CB–85547–00	DAMPER AMORTIGUADOR	1	1				
11	6AW–1441J–00	PIPE, SILENCER TUBO	1	1				
12	90464–99004	CLAMP BRIDA	1	1				
13	95D95–06020	BOLT, FLANGE DEEP RECESS CERROJO, REBORDE HUECO PROFUND	2	2				
14	69J–24170–00	CANISTER ASSY FRANJA DE DEPOSITO DE COMBUST.	1	1				
15	69J–2419A–01	HOLDER SOSTEN	1	1				
16	69J–2134X–00	BRACKET, CANISTER SOPORTE	1	1				
17	97E95–06516	BOLT, HEXAGON W/W DEEP RECESS TORNILLO HEXAGONAL CON RONDONA	1	1				
18	90480–10M23	GROMMET TAPON	2	2				
19	90387–06289	COLLAR ESPACIADOR	2	2				
20	90119–06M17	BOLT, WITH WASHER TORNILLO CON ARANDELA	2	2				
21	90464–13249	CLAMP BRIDA	8	8				
22	90464–20181	CLAMP BRIDA	1	1				

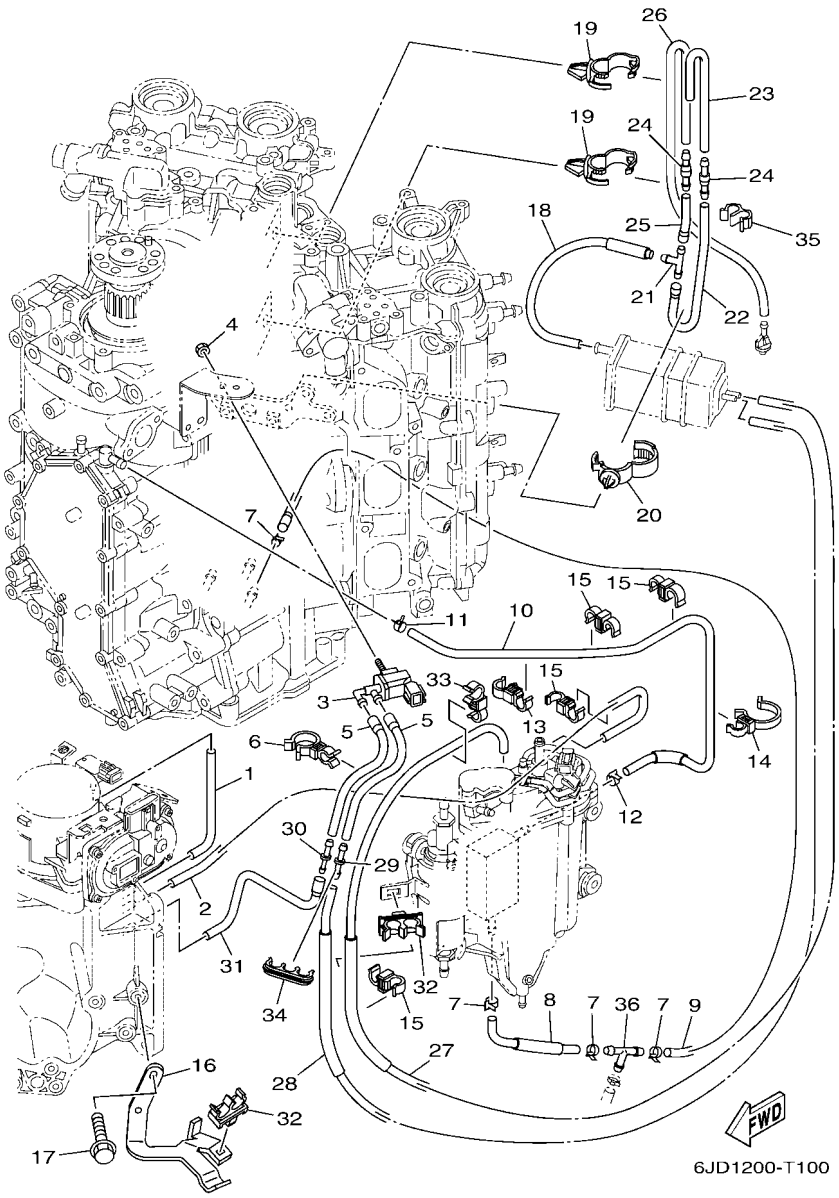

FIG. 10 INTAKE 2 — ADMISION 2

REF. NO.	PART NO. CODIGO Nº	DESCRIPTION DESCRIPCION	6JD1	6JE1				REMARKS OBSERVACIONES
1	6CB–13533–00	HOSE, VACUUM SENSING 4 MANGUERA, DE VACIO 4	1	1				
2	6CB–13532–10	HOSE, VACUUM SENSING 3 MANGUERA, DE VACIO 3	1	1				
3	6C5–86120–00	SOLENOID VALVE ASSY VALVULA SOLENOIDE CONJ.	1	1				
4	95380–06600	NUT, HEXAGON TUERCA	1	1				
5	6CB–2416A–00	HOSE TUBO DE COMBUSTIBLE	2	2				
6	90464–23001	CLAMP BRIDA	2	2				
7	90465–11M10	CLAMP BRIDA	4	4				
8	6CE–12482–10	PIPE 2 TUBO 2	1	1				
9	90445–097F7	HOSE (L780) TUBO (L780)	1	1				
10	6CB–12484–00	PIPE 4 TUBO 4	1	1				
11	90467–090A0	CLIP PRESILLA	1	1				
12	90465–11M10	CLAMP BRIDA	1	1				
13	90464–12010	CLAMP BRIDA	1	1				
14	90464–26002	CLAMP BRIDA	1	1				
15	90464–09013	CLAMP BRIDA	4	4				
16	6CB–13782–00	STAY SOPORTE	1	1				
17	95D95–06016	BOLT, FLANGE DEEP RECESS CERROJO, REBORDE HUECO PROFUND	2	2				
18	6CB–13545–00	HOSE 1 SELLO	1	1				
19	90464–20181	CLAMP BRIDA	2	2				
20	90464–07209	CLAMP BRIDA	1	1				
21	688–24378–00	PIPE, JOINT 3 TUBO DE UNION 3	1	1				
22	6CB–13546–01	HOSE 2 SELLO	1	1				
23	6CB–13547–00	HOSE 3 SELLO	1	1				
24	6E5–21744–00	BREATHER RESPIRADERO	2	2				
25	6CB–13548–00	HOSE, AIR 4 TUBO DE AIRE 4	1	1				
26	6CB–12483–01	PIPE 3 TUBO 3	1	1				
27	6CB–1475A–00	PIPE 1 TUBO 1	1	1				

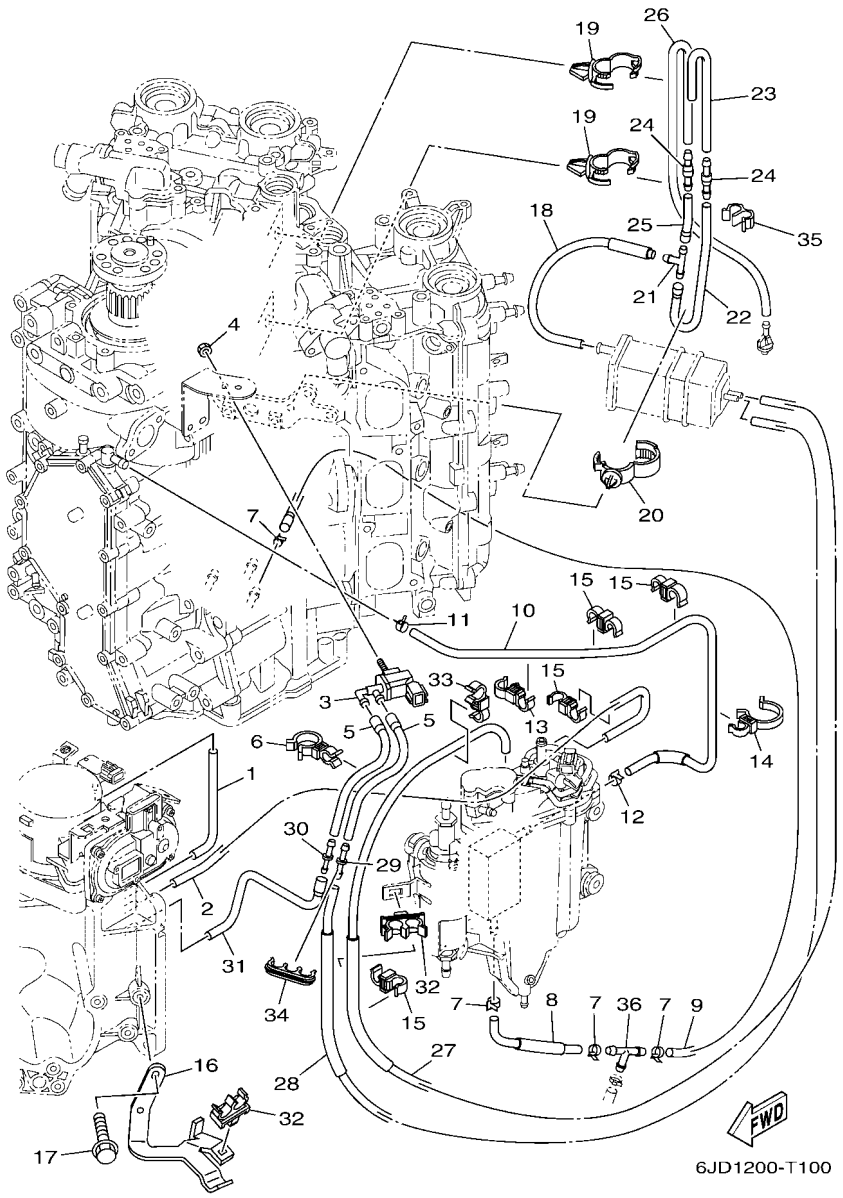

FIG. 10 INTAKE 2 — ADMISION 2

REF. NO.	PART NO. CODIGO Nº	DESCRIPTION DESCRIPCION	6JD1	6JE1				REMARKS OBSERVACIONES
28	6CB–1475F–00	PIPE 3 TUBO 3	1	1				
29	6G8–24376–00	PIPE, JOINT 1 TUBO DE UNION 1	1	1				
30	6EK–14989–00	ORIFICE, AIR VENT ORIFICIO DE VENTILACION	1	1				
31	6CB–1475G–10	PIPE 4 TUBO 4	1	1				
32	90464–11012	CLAMP BRIDA	2	2				
33	90464–12010	CLAMP BRIDA	1	1				
34	90464–10011	CLAMP BRIDA	1	1				
35	90464–07M20	CLAMP BRIDA	1	1				
36	688–24378–00	PIPE, JOINT 3 TUBO DE UNION 3	1	1				

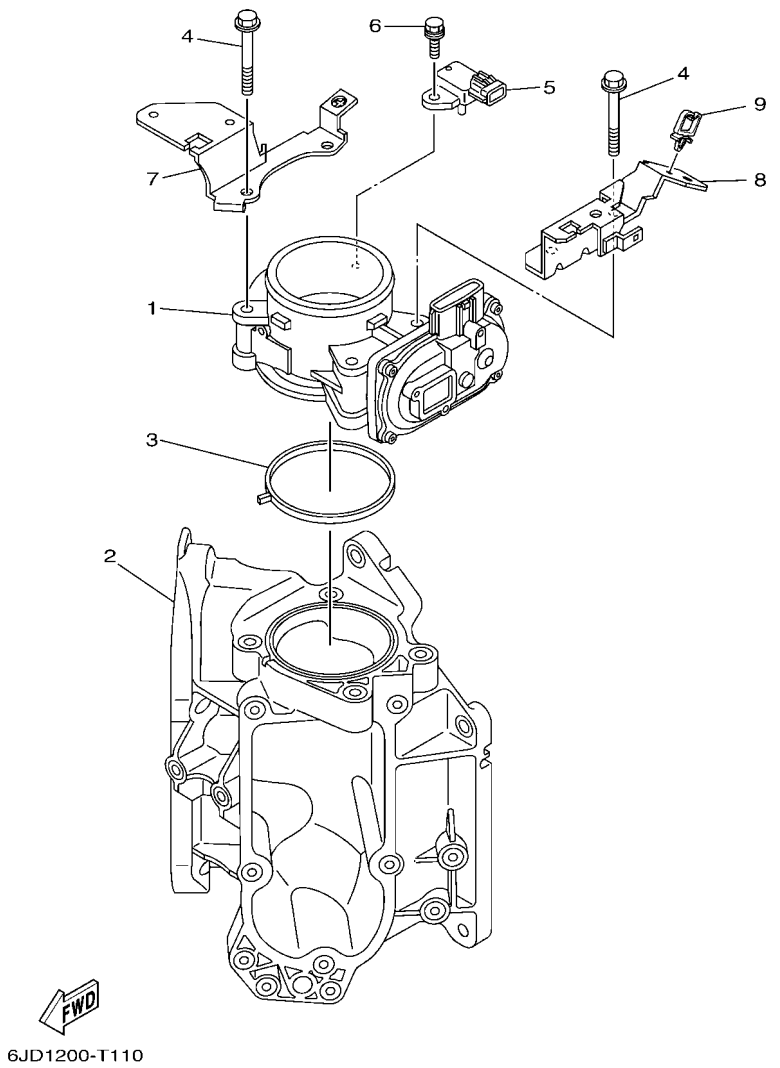

FIG. 11 THROTTLE BODY ASSY 1 — CAJA DE ACELERADOR COMPL 1

REF. NO.	PART NO. CODIGO Nº	DESCRIPTION DESCRIPCION	6JD1	6JE1				REMARKS OBSERVACIONES
1	6CB–13751–10	BODY, THROTTLE 1 CAJA 1	1	1				
2	6CB–13711–00	MIXING BODY CUERPO DE MEZCLA	1	1				
3	6CB–13556–00	GASKET, MANIFOLD EMPAQUE	1	1				
4	95D75–08060	BOLT, FLANGE DEEP RECESS CERROJO, REBORDE HUECO PROFUND	4	4				
5	6P2–82380–00	SENSOR, PRESSURE SENSOR DE PRESION	1	1				
6	97E75–06620	BOLT, HEXAGON W/W DEEP RECESS TORNILLO HEXAGONAL CON RONDONA	1	1				
7	6CB–13898–20	HOLDER SOSTEN	1	1				
8	6CB–13898–11	HOLDER SOSTEN	1	1				
9	90464–08004	CLAMP BRIDA	1	1				

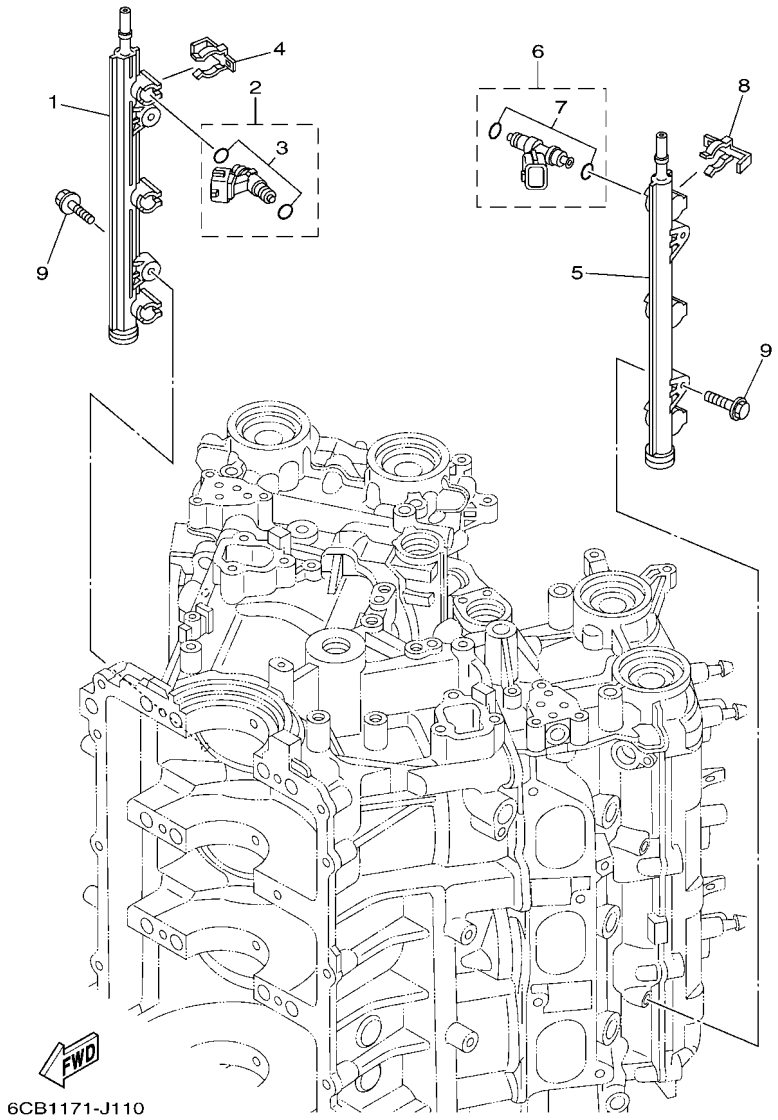

FIG. 12 THROTTLE BODY ASSY 2 — CAJA DE ACELERADOR COMPL 2

REF. NO.	PART NO. CODIGO Nº	DESCRIPTION DESCRIPCION	6JD1	6JE1				REMARKS OBSERVACIONES
1	6CB–13161–10	PIPE, DELIVERY 1 TUBO CONDUCTOR 1	1	1				
2	6AW–13761–00	INJECTOR INYECTOR	3	3				
3	6AW–1410B–00	.PACKING KIT .JUEGO DE EMPAQUE	1	1				
4	6CB–13577–00	CLIP PRESILLA	3	3				
5	6CB–13171–10	PIPE, DELIVERY 2 TUBO CONDUCTOR 2	1	1				
6	6AW–13761–00	INJECTOR INYECTOR	3	3				
7	6AW–1410B–00	.PACKING KIT .JUEGO DE EMPAQUE	1	1				
8	6CB–13577–00	CLIP PRESILLA	3	3				
9	90105–06M08	BOLT, FLANGE TORNILLO	4	4				

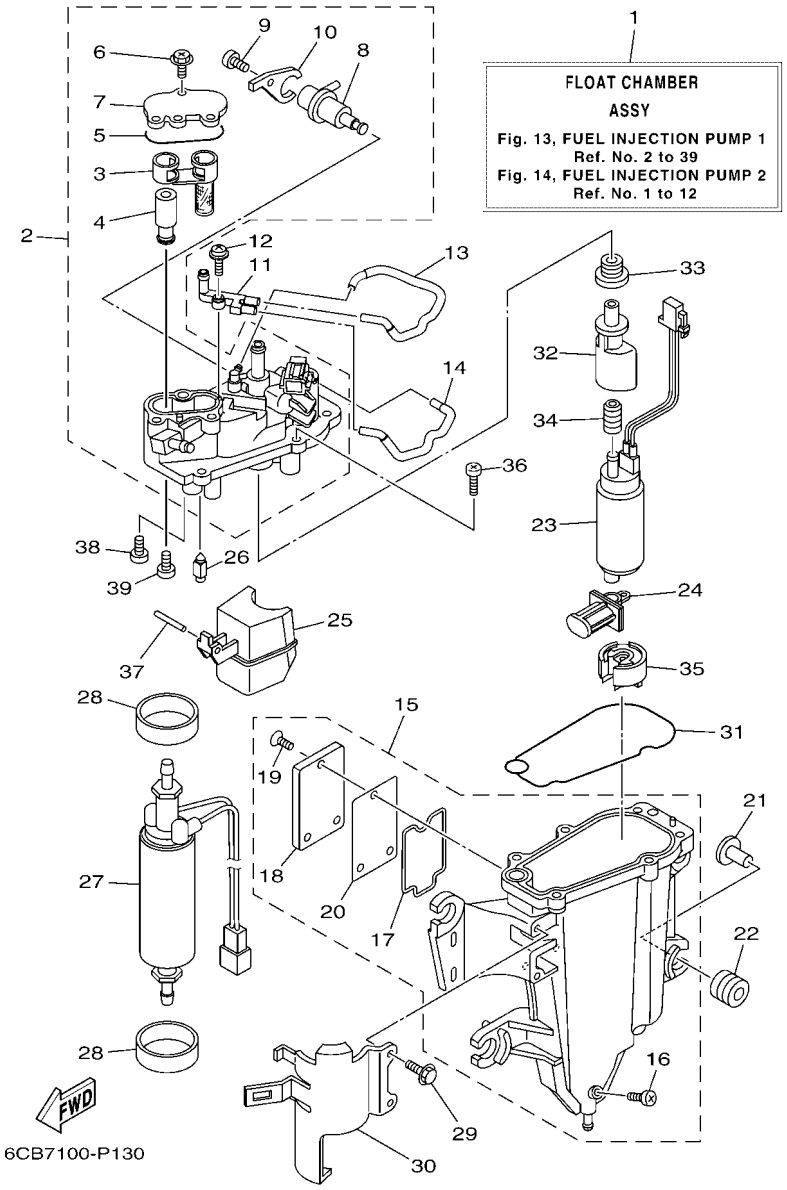

FIG. 13 FUEL INJECTION PUMP 1 — BOMBA DE INYECTOR 1

REF. NO.	PART NO. CODIGO Nº	DESCRIPTION DESCRIPCION	6JD1	6JE1				REMARKS OBSERVACIONES
1	6CB–14180–11	FLOAT CHAMBER ASSY CAMARA DE BOIA COMPLETE	1	1				EXCEPT FOR BRA EXCEPT FOR BRA
	6CB–14180–21	FLOAT CHAMBER ASSY CAMARA DE BOIA COMPLETE	1	1				FOR BRA FOR BRA
2	6CB–14182–02	COVER, FLOAT CHAMBER TAPA DE CAMARA DE BOIA	1	1				EXCEPT FOR BRA EXCEPT FOR BRA
	6CB–14182–20	COVER, FLOAT CHAMBER TAPA DE CAMARA DE BOIA	1	1				FOR BRA FOR BRA
3	6CB–24501–01	.FILTER, FUEL .FIELTRO	1	1				
4	6CB–24460–00	.RELIEF VALVE ASSY .VALVELA DE DESCOMPRESION	1	1				EXCEPT FOR BRA EXCEPT FOR BRA
	6CB–24460–10	.RELIEF VALVE ASSY .VALVELA DE DESCOMPRESION	1	1				FOR BRA FOR BRA
5	6CB–13016–00	.O-RING .ANILLO O	1	1				
6	6CB–14216–00	.SCREW .TORNILLO	3	3				
7	6CB–24217–00	.COVER .CUBIERTA	1	1				EXCEPT FOR BRA EXCEPT FOR BRA
	6CB–24217–10	.COVER .CUBIERTA	1	1				FOR BRA FOR BRA
8	6CB–13906–01	.REGULATOR, PRESSURE .REGULADOR	1	1				
9	6CB–14564–00	.SCREW .TORNILLO	1	1				
10	6CB–14146–00	.PLATE .PLACA SOPORTE	1	1				
11	68V–24379–10	PIPE, JOINT 4 TUBO DE UNION 4	1	1				
12	68V–14216–00	SCREW TORNILLO	1	1				
13	6CB–1475H–00	PIPE 5 TUBO 5	1	1				
14	6CB–1475J–00	PIPE 6 TUBO 6	1	1				
15	6CB–14181–01	BODY, FLOAT CHAMBER 1 CUERPO DE CAMARA DE BOIA	1	1				
16	6P2–14191–00	.PLUG, DRAIN .TORNILLO, DE DRENAJE	1	1				
17	6CB–14239–00	.SEAL .SELLO	1	1				
18	6CB–24452–10	.COVER .CUBIERTA	1	1				
19	6CB–14429–01	.SCREW .TORNILLO	3	3				
20	6CB–24482–00	.GASKET 1 .EMPAQUE 1	1	1				
21	63P–13716–00	COLLAR COLLAR	4	4				
22	6CB–13593–00	DAMPER COJINETE DE RODILLOS	4	4				
23	6CB–13907–10	FUEL PUMP COMP. BOMBA DE COMBUSTIBLE COMPLETA	1	1				EXCEPT FOR BRA EXCEPT FOR BRA

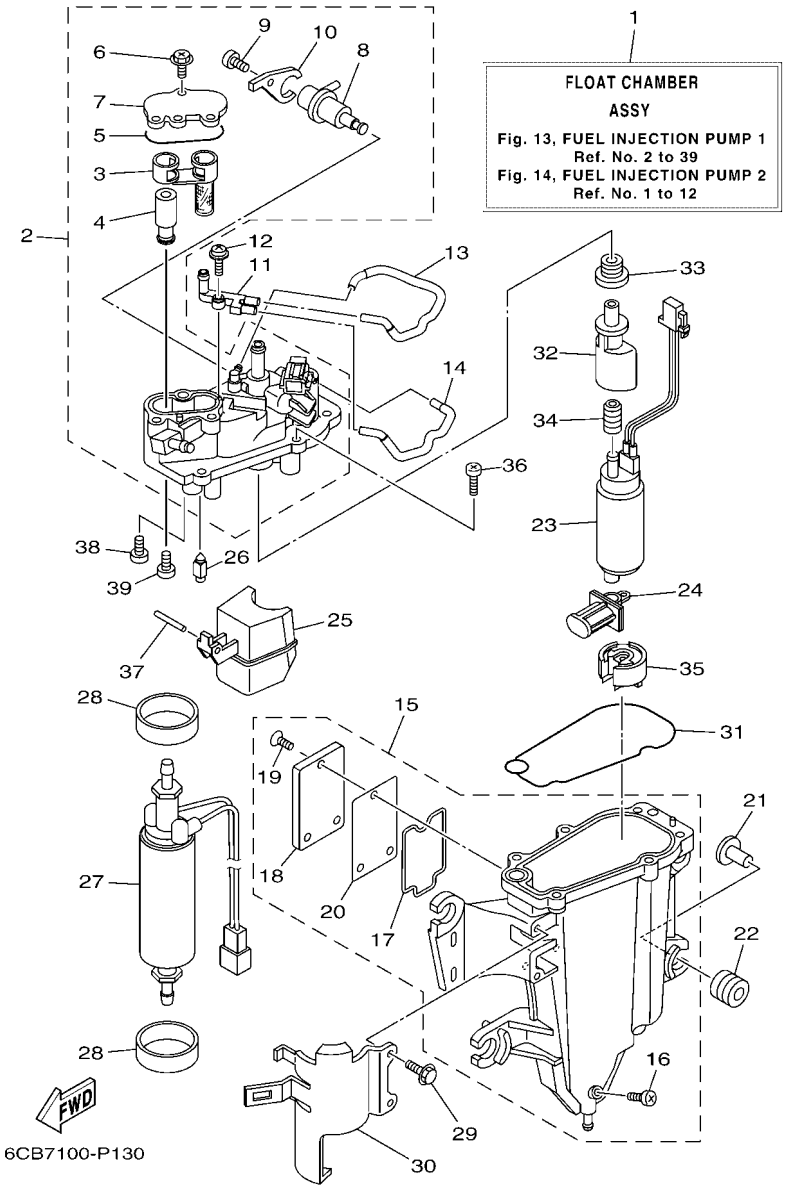

FIG. 13 FUEL INJECTION PUMP 1 — BOMBA DE INYECTOR 1

REF. NO.	PART NO. CODIGO Nº	DESCRIPTION DESCRIPCION	6JD1	6JE1				REMARKS OBSERVACIONES
23	6CB–13907–20	FUEL PUMP COMP. BOMBA DE COMBUSTIBLE COMPLETA	1	1				FOR BRA FOR BRA
24	63P–13915–00	FILTER FILTRO	1	1				
25	6CB–14985–00	FLOAT BOIA	1	1				
26	6CB–14546–00	VALVE, NEEDLE VALVULA DE AGUJA	1	1				
27	6CB–24410–01	FUEL PUMP ASSY BOMBA DE COMBUSTIBLE COMPLETA	1	1				
28	6CB–24492–00	BUSH, FUEL PUMP BUJE	2	2				
29	6CB–24592–00	BOLT TORNILLO	2	2				
30	6CB–24491–00	BRACKET, FUEL PUMP SOPORTE BOMBA COMBUSTIBLE	1	1				
31	6CB–14984–00	GASKET, FLOAT CHAMBER EMPAQUE CAMARA DE BOIA	1	1				
32	6AW–13132–00	JOINT JUNTA	1	1				
33	6CB–1447B–00	BUSH 1 BUJE 1	1	1				
34	6AW–13781–00	DAMPER, PUMP AMORTIGUADOR DE BOMBA	1	1				
35	6AW–13784–00	COVER, PUMP CUBIERTA DE BOMBA	1	1				
36	63P–14567–00	SCREW TORNILLO	6	6				
37	6P2–14386–00	PIN, FLOAT PASADOR DE BOIA	1	1				
38	4SV–24453–00	SCREW TORNILLO	1	1				EXCEPT FOR BRA EXCEPT FOR BRA
	69J–24453–00	SCREW TORNILLO	1	1				FOR BRA FOR BRA
39	98507–04008	SCREW, PAN HEAD TORNILLO DE CABEZA CON PLANA	1	1				EXCEPT FOR BRA EXCEPT FOR BRA
	68V–14592–10	SCREW TORNILLO	1	1				FOR BRA FOR BRA

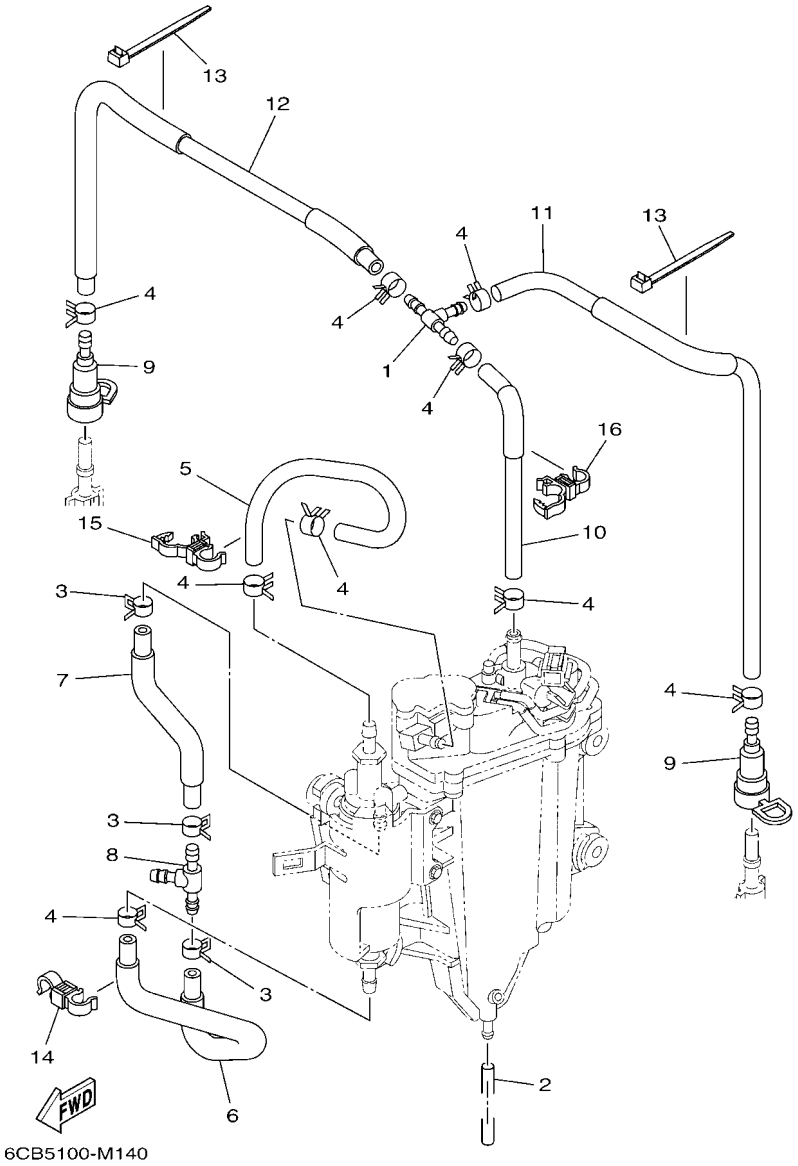

FIG. 14 FUEL INJECTION PUMP 2 — BOMBA DE INYECTOR 2

REF. NO.	PART NO. CODIGO Nº	DESCRIPTION DESCRIPCION	6JD1	6JE1				REMARKS OBSERVACIONES
1	6CB–24461–00	PIPE, JOINT TUBO DE UNION	1	1				
2	6P2–14149–00	PIPE TUBO	1	1				
3	69J–14137–00	CLIP PRESILLA	3	3				
4	68V–13577–00	CLIP PRESILLA	9	9				
5	6CB–24324–00	PIPE 13 TUBO 13	1	1				
6	6CB–24317–00	PIPE 7 TUBO 7	1	1				
7	6CB–24323–00	PIPE 12 TUBO 12	1	1				
8	6E5–24378–00	PIPE, JOINT 3 TUBO DE UNION 3	1	1				
9	60E–24300–01	FUEL PIPE JOINT CONECTOR MANGUERA COMBUSTIBLE	2	2				
10	6CB–13971–01	PIPE, FUEL 1 ANILLO DE ESPACIADOR	1	1				
11	6CB–13974–01	PIPE, FUEL 4 TUBO, COMBUSTIBLE 4	1	1				
12	6CB–13972–00	PIPE, FUEL 2 TUBO, COMBUSTIBLE 2	1	1				
13	90465–14M66	CLAMP BRIDA	2	2				
14	90464–12009	CLAMP BRIDA	1	1				
15	90464–12012	CLAMP BRIDA	1	1				
16	90464–12012	CLAMP BRIDA	1	1				

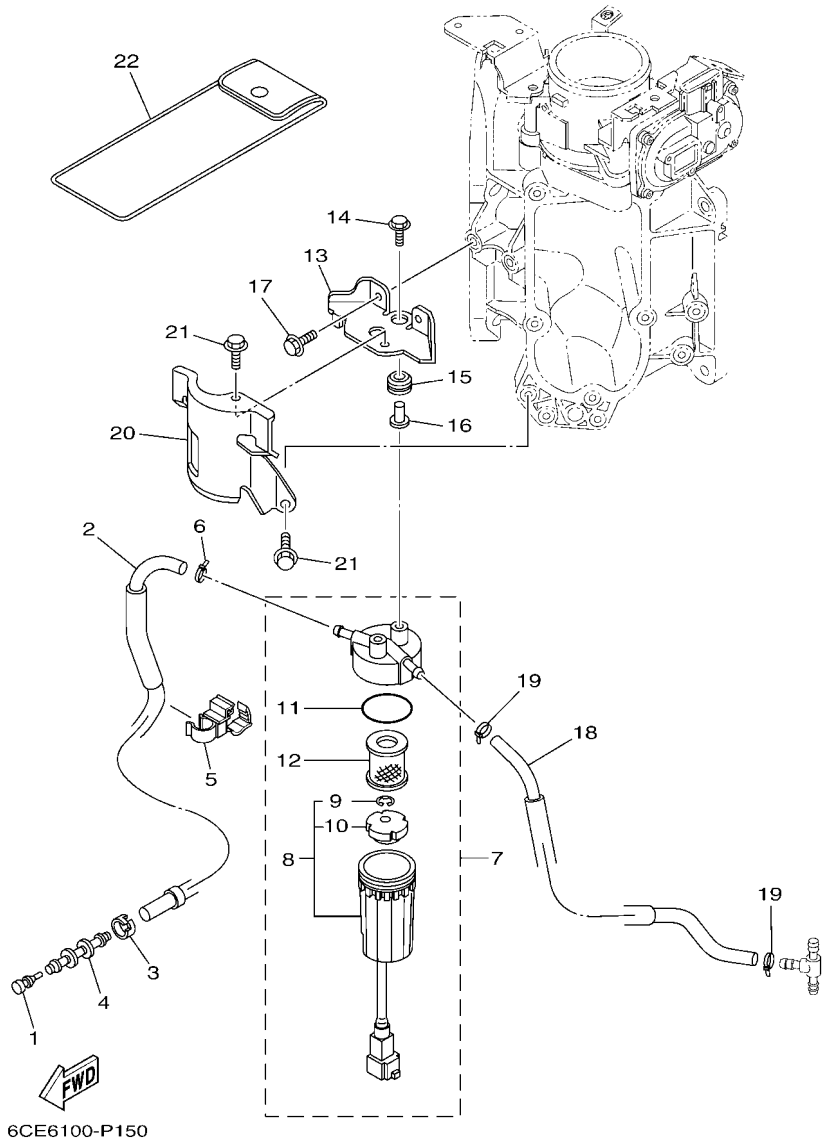

FIG. 15 FUEL 1 — COMBUSTIBLE 1

REF. NO.	PART NO. CODIGO Nº	DESCRIPTION DESCRIPCION	6JD1	6JE1				REMARKS OBSERVACIONES
1	689–85547–00	DAMPER AMORTIGUADOR	1	1				
2	6CB–24314–01	PIPE 4 TUBO 4	1	1				EXCEPT FOR CAR EXCEPT FOR CAR
	6CB–24314–11	PIPE 4 TUBO 4	1	1				FOR CAR FOR CAR
3	6E5–24351–51	BAND 1 ABRAZADERA 1	1	1				
4	6AW–24377–01	PIPE, JOINT 2 TUBO DE UNION 2	1	1				
5	90464–12012	CLAMP BRIDA	1	1				
6	90465–11M10	CLAMP BRIDA	1	1				
7	6P3–24560–22	FILTER ASSY FILTRO COMPLETO	1	1				
8	6P3–24562–21	.CUP, FILTER .COPA DE FILTRO	1	1				
9	6P3–24519–00	..CLIP ..PRESILLA	1	1				
10	6P3–24469–00	..FLOAT, WATER LEVEL ..BOIA	1	1				
11	6P3–24564–00	.GASKET .EMPAQUE	1	1				
12	6P3–24563–01	.ELEMENT, FILTER .ELEMENTO DEL FILTRO	1	1				
13	6CB–24566–00	BRACKET, FILTER SOPORTE DEL FILTRO	1	1				
14	90119–06M17	BOLT, WITH WASHER TORNILLO CON ARANDELA	2	2				
15	90480–10M23	GROMMET TAPON	2	2				
16	90387–06289	COLLAR ESPACIADOR	2	2				
17	95D95–06016	BOLT, FLANGE DEEP RECESS CERROJO, REBORDE HUECO PROFUND	2	2				
18	6CB–24313–00	PIPE 3 TUBO 3	1	1				EXCEPT FOR CAR EXCEPT FOR CAR
	6CB–24313–10	PIPE 3 TUBO 3	1	1				FOR CAR FOR CAR
19	90465–11M10	CLAMP BRIDA	2	2				
20	6CB–24596–01	COVER CUBIERTA	1	1				
21	95D95–06014	BOLT, FLANGE DEEP RECESS CERROJO, REBORDE HUECO PROFUND	2	2				
22	67F–28100–11	TOOL KIT JUEGO DE HERRAMIENTAS	1					AP AP

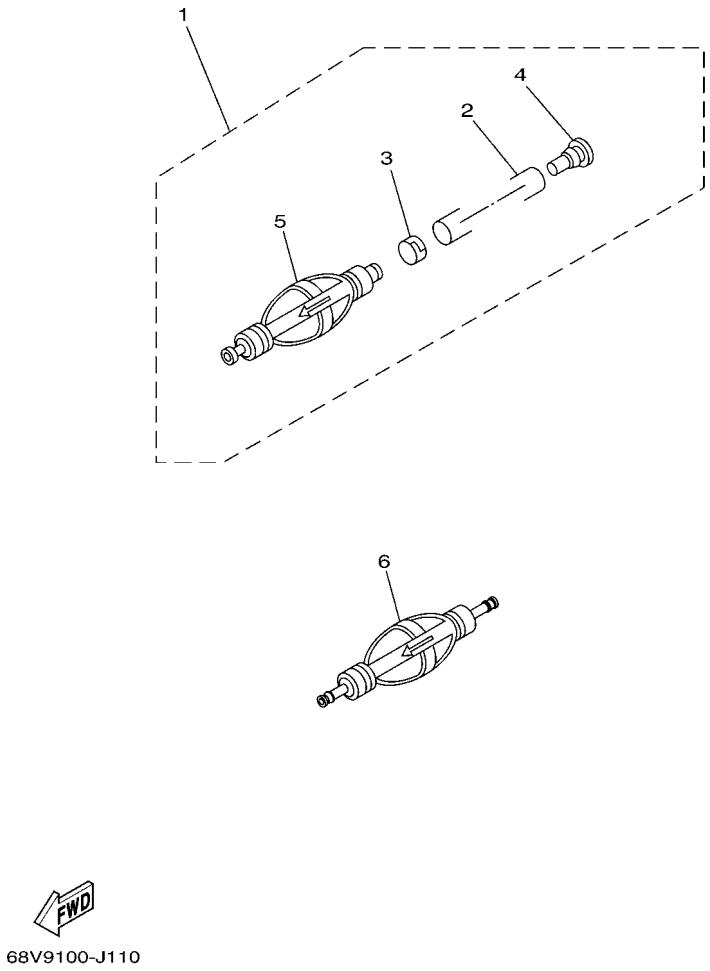

FIG. 16 FUEL 2 — COMBUSTIBLE 2

REF. NO.	PART NO. CODIGO Nº	DESCRIPTION DESCRIPCION	6JD1	6JE1				REMARKS OBSERVACIONES
1	6Y2–24307–50	FUEL PIPE COMP. 2 MANGUERA COMPL,COMBUSTIBLE 2	1	1				AP EXCEPT FOR CAR AP EXCEPT FOR CAR
2	90445–13M01	.HOSE (L2050) .MANGUERA (L2050)	1	1				
3	6E5–24351–51	.BAND 1 .ABRAZADERA 1	1	1				
4	90480–06M19	.GROMMET .TAPON	1	1				
5	6Y2–24360–60	.PRIMER PUMP ASSY .SOPORTE BOMBA	1	1				
6	6AW–24360–01	PRIMER PUMP ASSY SOPORTE BOMBA	1	1				AP FOR CAR AP FOR CAR

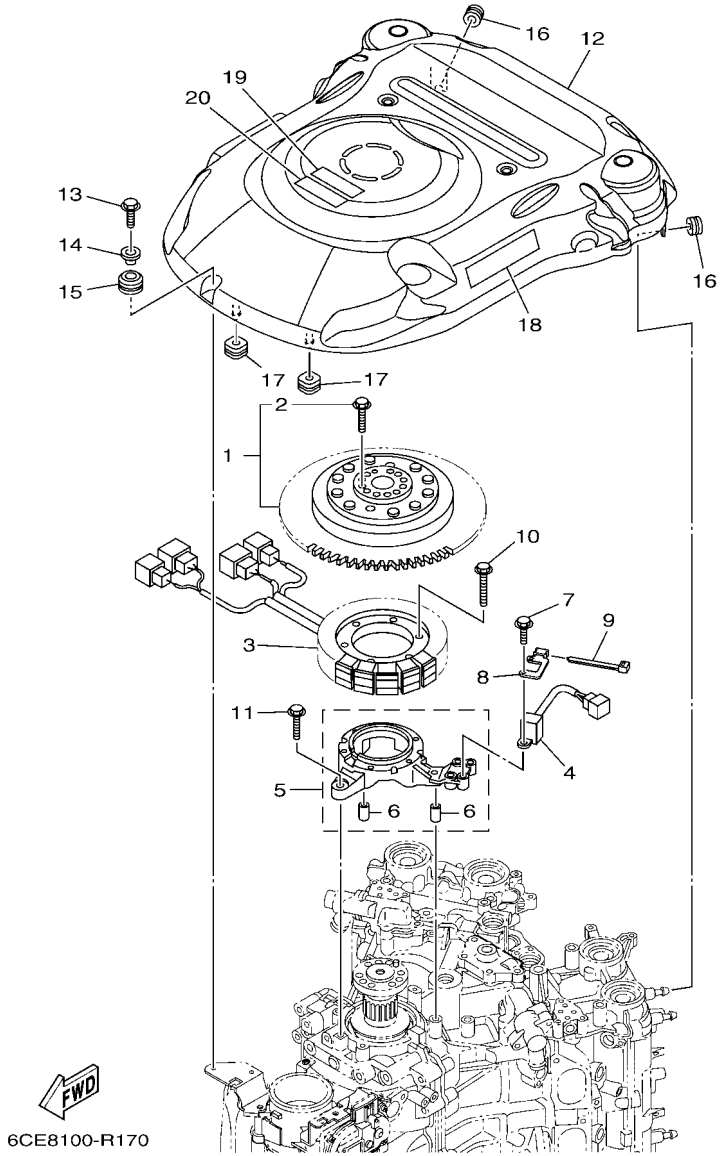

FIG. 17 GENERATOR GENERADOR

REF. NO.	PART NO. CODIGO Nº	DESCRIPTION DESCRIPCION	6JD1	6JE1				REMARKS OBSERVACIONES
1	6CE–W8145–01	ROTOR ASSY WITH BOLTS ROTOR COMPLETO CON TORNILLO	1	1				
2	6EK–W9010–00	.BOLT SET .JUEGO DE TORNILLO	1	1				
3	6CE–81410–00	STATOR ASSY ESTATOR COMPLETO	1	1				
4	6CB–85580–00	COIL, PULSER BOBINA DE PULSACION	1	1				
5	6CB–85561–00	BASE, MAGNETO BASE DE MAGNETO	1	1				
6	99530–08012	.PIN, DOWEL .PASADOR, DE ESPIGA	2	2				
7	97595–05520	BOLT, WITH WASHER PERNO CON ARANDELA	2	2				
8	6CE–85592–00	STAY, PULSER SOPORTE, BOBINA DE PULSACION	1	1				
9	90465–11M10	CLAMP BRIDA	1	1				
10	95022–06035	BOLT, FLANGE PERNO, DE BRIDA	6	6				
11	95D95–06030	BOLT, FLANGE DEEP RECESS CERROJO, REBORDE HUECO PROFUND	4	4				
12	6CE–81337–01	COVER, FLYWHEEL CUBIERTA DE VOLANTE	1	1				
13	95D95–06020	BOLT, FLANGE DEEP RECESS CERROJO, REBORDE HUECO PROFUND	1	1				
14	90387–06285	COLLAR ESPACIADOR	1	1				
15	90480–15M31	GROMMET TAPON	1	1				
16	90480–12314	GROMMET TAPON	2	2				
17	6CB–85516–00	SPACER ESPACIADOR	2	2				
18	6CE–13437–61	MARK, CAUTION MARKER	1	1				EXCEPT FOR BRA EXCEPT FOR BRA
19	6EE–81994–40	LABEL, SAFETY ETIQUETA DE SEGURIDAD	1	1				EXCEPT FOR BRA EXCEPT FOR BRA
	6AH–81994–70	LABEL, SAFETY ETIQUETA DE SEGURIDAD	1	1				FOR BRA FOR BRA
20	6EE–81994–50	LABEL, SAFETY ETIQUETA DE SEGURIDAD	1	1				FOR CAR FOR CAR

FIG. 18 ELECTRICAL 1 — EQUIPO ELECTRICO 1

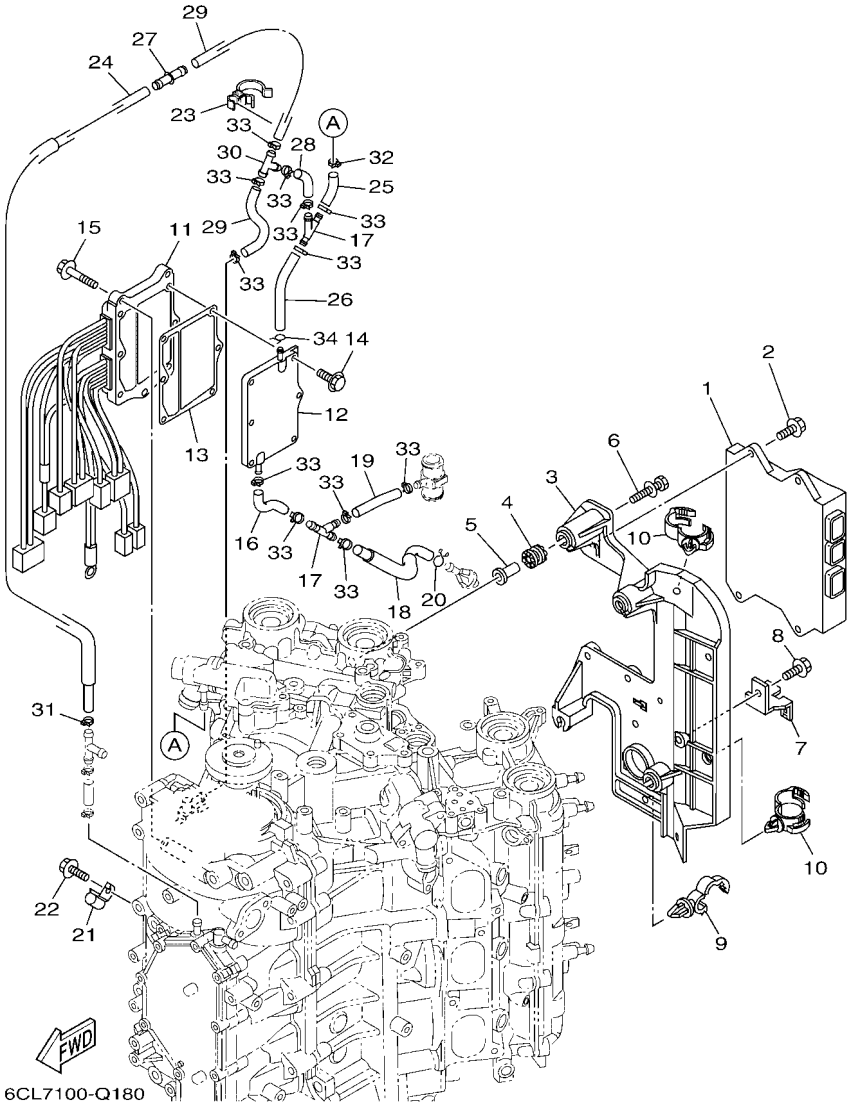

REF. NO.	PART NO. CODIGO Nº	DESCRIPTION DESCRIPCION	6JD1	6JE1				REMARKS OBSERVACIONES
1	6JD–8591A–00	ENGINE CONTROL UNIT ASSY UNIDAD CONTROL	1	1				EXCEPT FOR BRA EXCEPT FOR BRA
	6JD–8591A–10	ENGINE CONTROL UNIT ASSY UNIDAD CONTROL	1	1				FOR BRA FOR BRA
2	95D95–06020	BOLT, FLANGE DEEP RECESS CERROJO, REBORDE HUECO PROFUND	4	4				
3	6CB–82316–01	BRACKET, IGNITION COIL SOPORTE BOBINA ENCENDIDO	1	1				
4	64J–85516–00	SPACER ESPACIADOR	4	4				
5	69M–42758–01	COLLAR COLLAR	4	4				
6	90119–06M56	BOLT, WITH WASHER TORNILLO CON ARANDELA	4	4				
7	6BR–81845–00	PLATE PLACA	1	1				
8	95D95–06012	BOLT, FLANGE DEEP RECESS CERROJO, REBORDE HUECO PROFUND	1	1				
9	90464–13249	CLAMP BRIDA	1	1				
10	90464–20181	CLAMP BRIDA	2	2				
11	6CE–81960–10	RECTIFIER & REGULATOR ASSY RECTIFICADOR Y REGULADOR	1	1				
12	6CE–81972–00–9S	COVER, RECTIFIER CUBIERTA DE RECTIFICADOR	1	1				
13	6CE–81975–00	PLATE, RECTIFIER FITTING PLACA ACCESORIA RECTIF.	1	1				
14	90119–06MA3	BOLT, WITH WASHER TORNILLO CON ARANDELA	6	6				
15	95D95–06025	BOLT, FLANGE DEEP RECESS CERROJO, REBORDE HUECO PROFUND	3	3				
16	6CE–1248A–00	PIPE 8 TUBO 8	1	1				
17	6CE–24377–00	PIPE, JOINT 2 TUBO DE UNION 2	2	2				
18	6CE–12483–00	PIPE 3 TUBO 3	1	1				
19	90445–107A5	HOSE (L30) TUBO (L30)	1	1				
20	90467–08M18	CLIP PRESILLA	1	1				
21	90462–06013	CLAMP BRIDA	1	1				
22	95023–06012	BOLT TORNILLO	1	1				
23	90464–26002	CLAMP BRIDA	1	1				
24	6CE–12481–10	PIPE 1 TUBO 1	1	1				
25	6CE–14872–00	PIPE 2 TUBO 2	1	1				
26	6CE–12485–00	PIPE 5 TUBO 5	1	1				

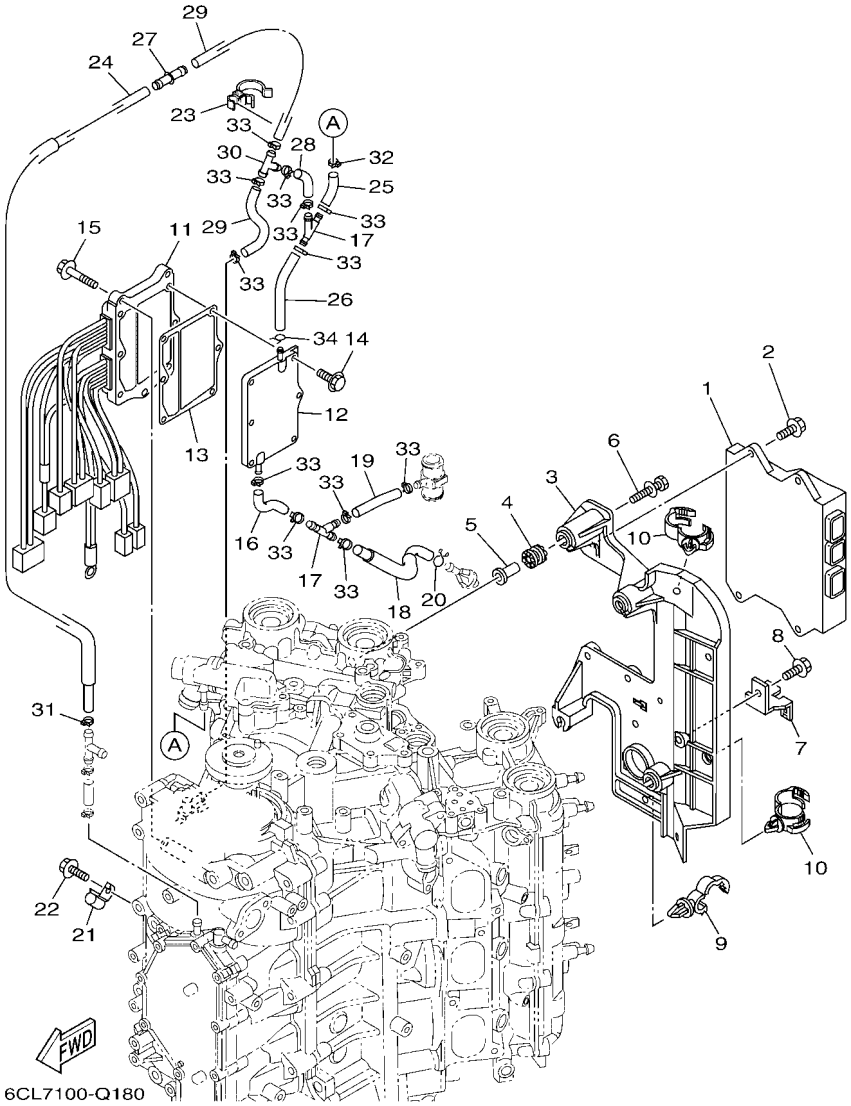

FIG. 18 ELECTRICAL 1 — EQUIPO ELECTRICO 1

REF. NO.	PART NO. CODIGO Nº	DESCRIPTION DESCRIPCION	6JD1	6JE1				REMARKS OBSERVACIONES
27	6CE–24376–01	PIPE, JOINT 1 TUBO DE UNION 1	1	1				
28	6CE–14872–00	PIPE 2 TUBO 2	1	1				
29	90445–09068	HOSE (L110) TUBO (L110)	2	2				
30	688–24378–00	PIPE, JOINT 3 TUBO DE UNION 3	1	1				
31	90465–11M10	CLAMP BRIDA	1	1				
32	90465–11M10	CLAMP BRIDA	1	1				
33	90465–11M10	CLAMP BRIDA	12	12				
34	90467–08004	CLIP PRESILLA	1	1				

FIG. 19 ELECTRICAL 2 — EQUIPO ELECTRICO 2

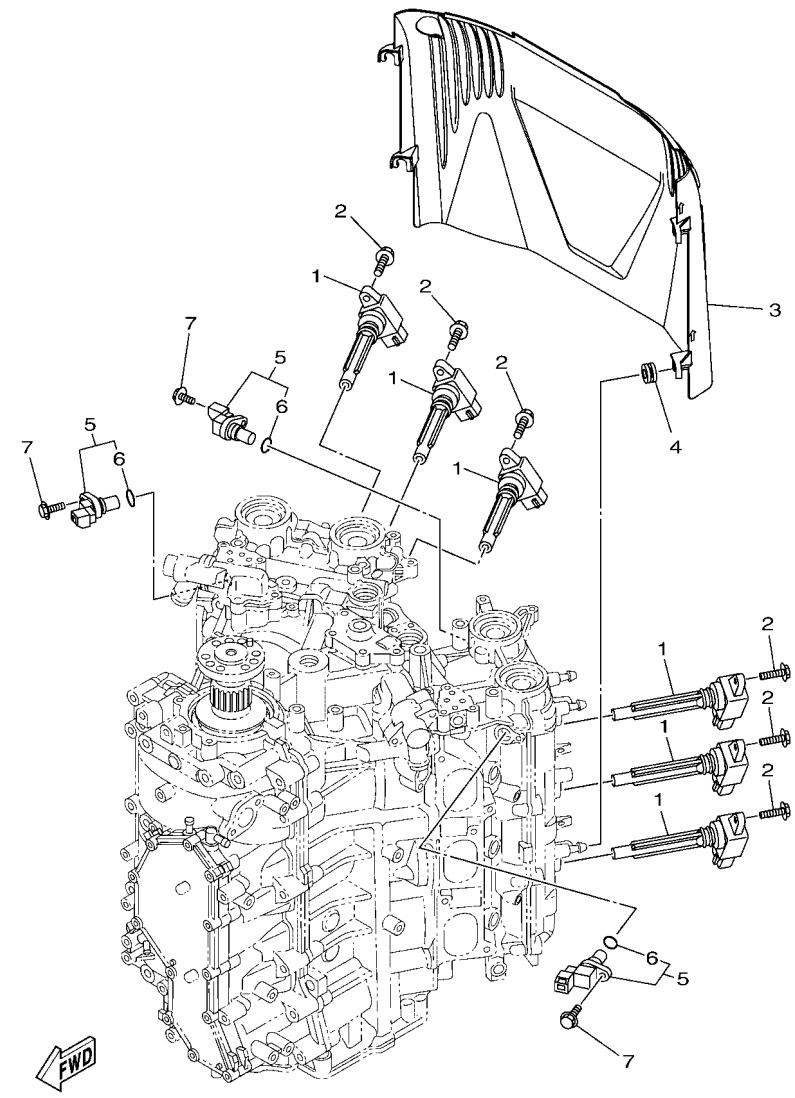

6CE8100-R190

REF. NO.	PART NO. CODIGO Nº	DESCRIPTION DESCRIPCION	6JD1	6JE1				REMARKS OBSERVACIONES
1	6CB–82310–00	IGNITION COIL ASSY BOBINA DE ENCENDIDO COMPLETA	6	6				
2	95D95–06025	BOLT, FLANGE DEEP RECESS CERROJO, REBORDE HUECO PROFUND	6	6				
3	6CB–82314–00	COVER, IGNITION COIL CUBIERTA BOBINA ENCENDIDO	1	1				
4	90480–12314	GROMMET TAPON	4	4				
5	6P2–85896–00	SENSOR, CAM POSITION SENSOR DE LEVA	3	3				
6	6P2–85075–00	.O-RING .ANILLO-O	1	1				
7	97E95–06520	BOLT, HEXAGON W/W DEEP RECESS TORNILLO HEXAGONAL CON RONDONA	3	3				

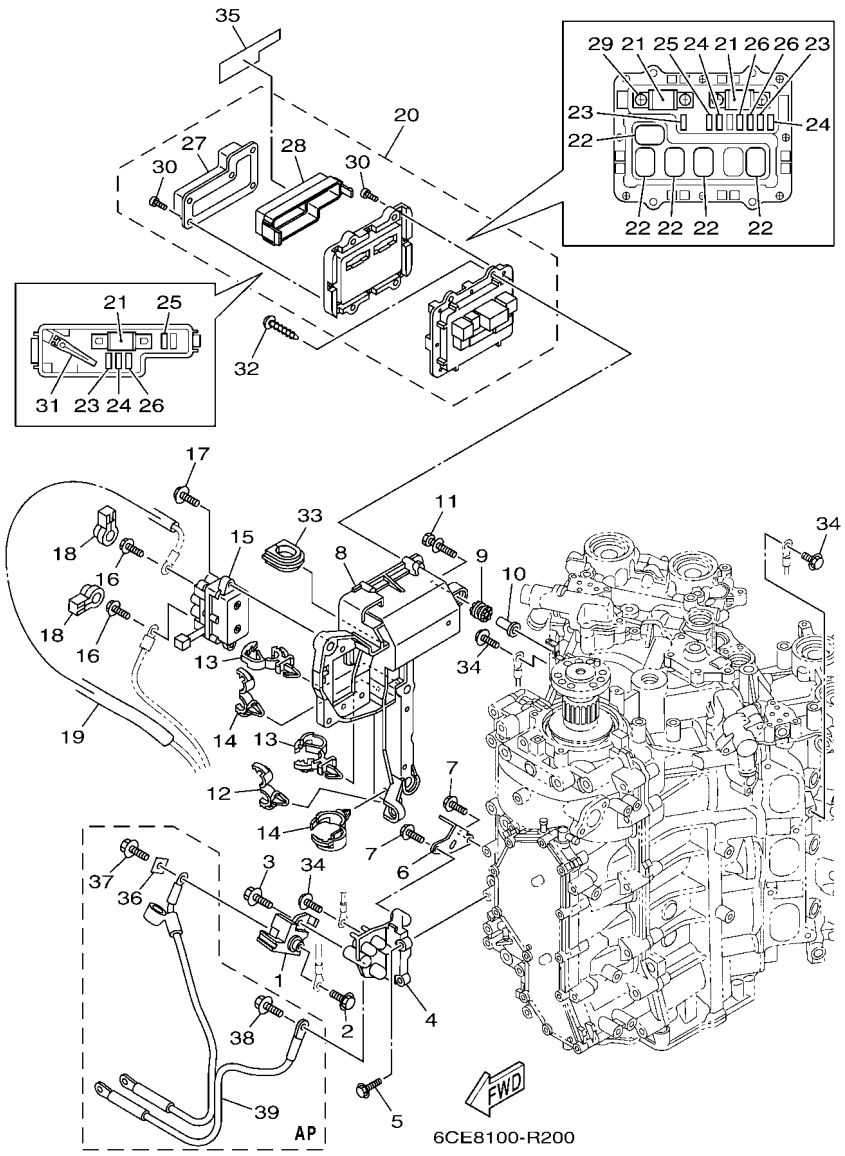

FIG. 20 ELECTRICAL 3 — EQUIPO ELECTRICO 3

REF. NO.	PART NO. CODIGO Nº	DESCRIPTION DESCRIPCION	6JD1	6JE1				REMARKS OBSERVACIONES
1	6P2–81925–01	TERMINAL TERMINAL	1	1				
2	95D95–08016	BOLT, FLANGE DEEP RECESS CERROJO, REBORDE HUECO PROFUND	1	1				
3	95814–08020	BOLT, FLANGE TORNILLO	1	1				
4	6CB–81929–00	BRACKET, TERMINAL SOPORTE	1	1				
5	95D95–06020	BOLT, FLANGE DEEP RECESS CERROJO, REBORDE HUECO PROFUND	2	2				
6	6CE–82588–00	PLATE PLACA	1	1				
7	95D95–06016	BOLT, FLANGE DEEP RECESS CERROJO, REBORDE HUECO PROFUND	2	2				
8	6CB–81948–02	BRACKET SOPORTE	1	1				
9	64J–85516–00	SPACER ESPACIADOR	5	5				
10	69M–42758–01	COLLAR COLLAR	5	5				
11	90119–06M56	BOLT, WITH WASHER TORNILLO CON ARANDELA	5	5				
12	90464–13249	CLAMP BRIDA	1	1				
13	90464–12183	CLAMP BRIDA	2	2				
14	90464–20181	CLAMP BRIDA	2	2				
15	6AW–81950–00	RELAY ASSY RELE COMPLETO	1	1				
16	97E95–06610	BOLT, HEXAGON W/W DEEP RECESS TORNILLO HEXAGONAL CON RONDONA	2	2				
17	97513–06520	BOLT, WITH WASHER PERNO CON ARANDELA	2	2				
18	6P2–8183X–00	CAP, TERMINAL CUBIERTA DE TERMINAL	2	2				
19	90446–15003	HOSE (L100) TUBO (L100)	1	1				
20	6CE–82170–11	FUSE BOX ASSY CAJA DE FUSIBLES COMPL.	1	1				
21	6CE–82151–00	.FUSE (100A) .FUSIBLE (100A)	3	3				
22	6AW–8195A–00	.RELAY ASSY .RELE COMPLETO	5	5				
23	67F–82151–40	.FUSE (10A) .FUSIBLE (10A)	3	3				
24	67F–82151–50	.FUSE (15A) .FUSIBLE (15A)	3	3				
25	67F–82151–00	.FUSE (20A) .FUSIBLE (20A)	2	2				
26	67F–82151–10	.FUSE (30A) .FUSIBLE (30A)	3	3				
27	6CB–81639–10	.COVER .TAPA	1	1				

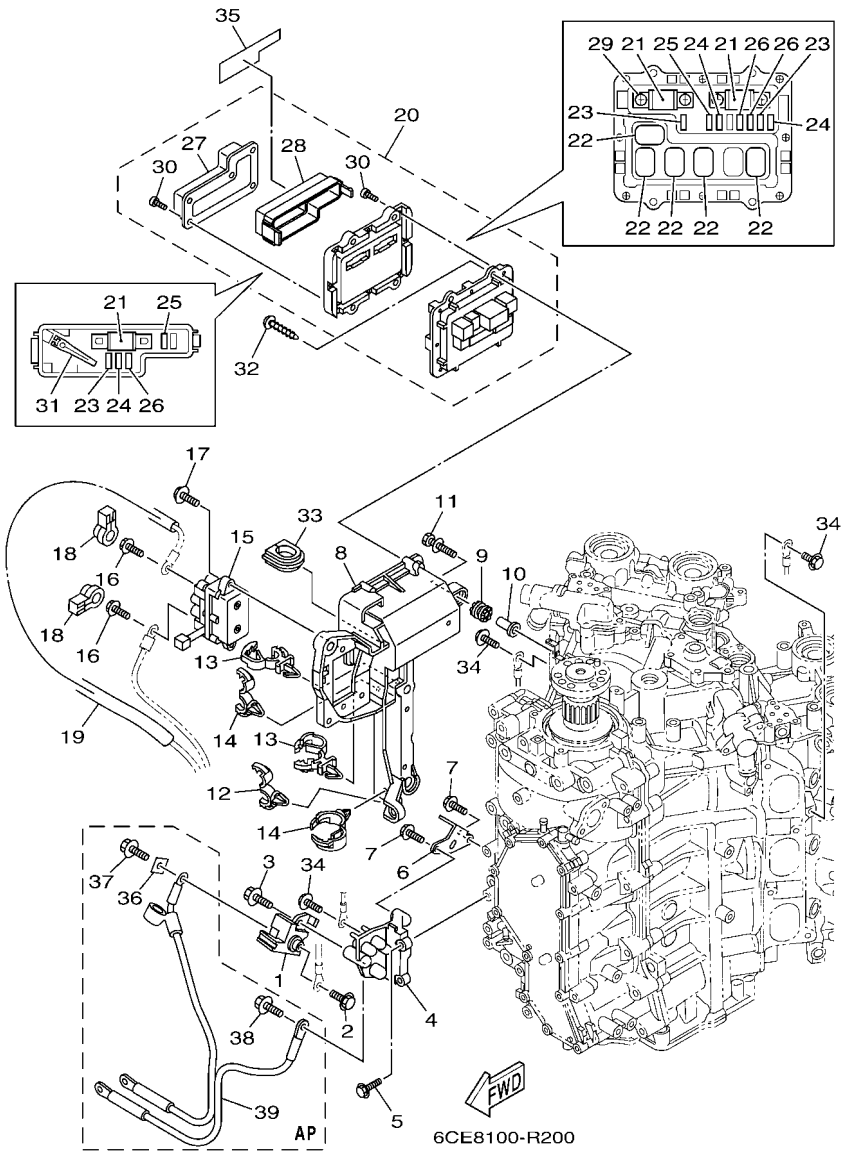

FIG. 20 ELECTRICAL 3 — EQUIPO ELECTRICO 3

REF. NO.	PART NO. CODIGO Nº	DESCRIPTION DESCRIPCION	6JD1	6JE1				REMARKS OBSERVACIONES
28	6CB–85544–00	.CASE .CAJA	1	1				
29	68F–82846–00	.SCREW, PAN HEAD (M5) .TORNILLO (M5)	4	4				
30	6P2–82113–00	.SCREW (M3) .TORNILLO (M3)	13	13				
31	67F–2812A–00	.PULLER, FUSE .TIRADOR DE FUSIBLE	1	1				
32	97780–50620	SCREW, TAPPING TORNILLO DE CABEZA DE CONO ACH	4	4				
33	6P2–81336–00	GROMMET TAPON PROTECTOR	1	1				
34	97E95–06516	BOLT, HEXAGON W/W DEEP RECESS TORNILLO HEXAGONAL CON RONDONA	5	5				
35	6CE–81919–20	GRAPHIC, REGULATOR CALCAMONIA DE REGULADOR	1	1				
36	6CB–81923–00	WASHER ARANDELA	1	1				AP AP
37	95D95–08016	BOLT, FLANGE DEEP RECESS CERROJO, REBORDE HUECO PROFUND	1	1				AP AP
38	95D95–08016	BOLT, FLANGE DEEP RECESS CERROJO, REBORDE HUECO PROFUND	1	1				AP AP
39	6CB–82105–01	BATTERY CABLE CABLE DE BATERIA	1	1				AP AP

FIG. 21 ELECTRICAL 4 — EQUIPO ELECTRICO 4

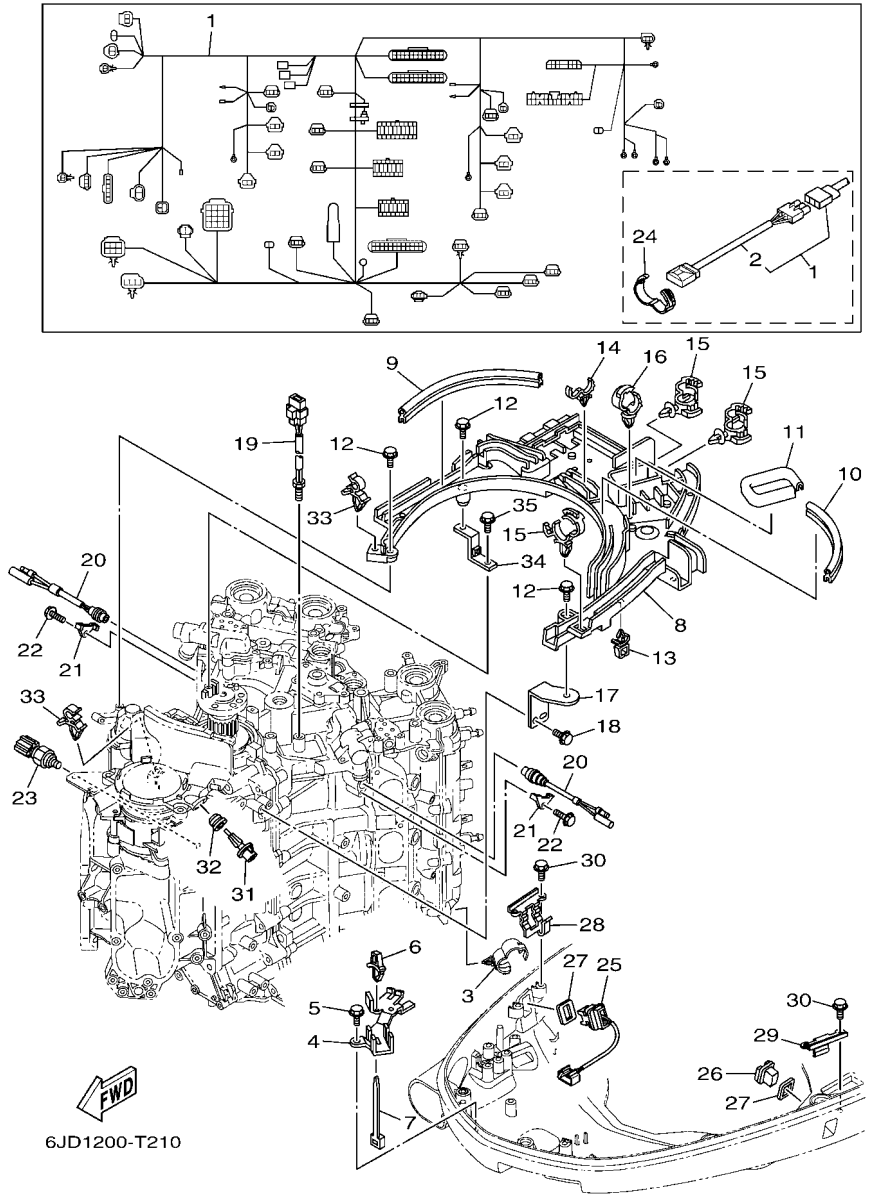

REF. NO.	PART NO. CODIGO Nº	DESCRIPTION DESCRIPCION	6JD1	6JE1				REMARKS OBSERVACIONES
1	6CE–82590–06	WIRE HARNESS ASSY CONJUNTO DE CABLES	1	1				
	6CE–82590–15	WIRE HARNESS ASSY CONJUNTO DE CABLES	1	1				FOR TILT LIMIT FOR TILT LIMIT
2	6CE–81980–00	.DIODE ASSY .CONJUNTO DIODO	1	1				
3	90464–20181	CLAMP BRIDA	4	4				
4	6CB–82594–00	CLAMP GRAMPA	1	1				
5	95D95–06012	BOLT, FLANGE DEEP RECESS CERROJO, REBORDE HUECO PROFUND	2	2				
6	90464–06001	CLAMP BRIDA	1	1				
7	90465–13M24	CLAMP BRIDA	1	1				
8	6CB–82589–01	PROTECTER, WIRE HARNESS PROTECTOR DE ARNES DE CABLE	1	1				
9	6BG–42617–00	DAMPER, FORM HULE DE FORMA	1	1				
10	6CB–42617–00	DAMPER, FORM HULE DE FORMA	1	1				
11	6CB–42629–00	SEAL SELLO 2	1	1				
12	95D95–06020	BOLT, FLANGE DEEP RECESS CERROJO, REBORDE HUECO PROFUND	5	5				
13	90464–11121	CLAMP BRIDA	1	1				
14	90464–18246	CLAMP BRIDA	1	1				
15	90464–12183	CLAMP BRIDA	4	4				
16	90464–20181	CLAMP BRIDA	2	2				
17	6CB–82388–00	PLATE PLACA	1	1				
18	95D95–06016	BOLT, FLANGE DEEP RECESS CERROJO, REBORDE HUECO PROFUND	2	2				
19	6CB–85790–00	THERMOSENSOR ASSY TERMICA SENSORIO	1	1				
20	6P2–82560–01	THERMO SWITCH ASSY INTER. DE TERMO	2	2				
21	6E9–82588–00	PLATE PLACA	2	2				
22	95D95–06012	BOLT, FLANGE DEEP RECESS CERROJO, REBORDE HUECO PROFUND	2	2				
23	6AW–83651–00	SENDER, OIL PRESSURE TRASMISOR DE PRESION DE ACEITE	1	1				
24	90464–16001	CLAMP BRIDA	1	1				
25	6BR–82563–01	TRIM & TILT SWITCH ASSY INTERRUPTOR DE INCLINACION	1	1				
26	69J–42723–01	COVER, BOTTOM CUBIERTA INFERIOR	1	1				

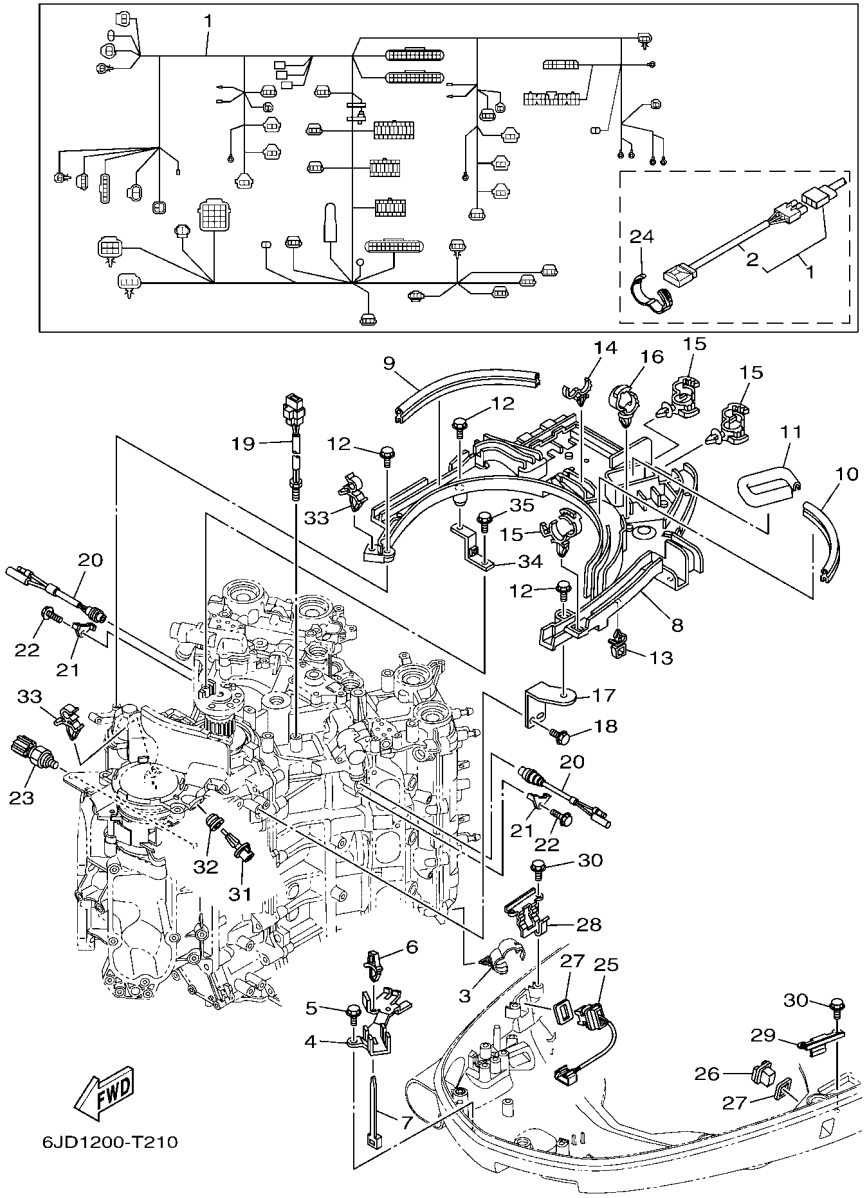

FIG. 21 ELECTRICAL 4 — EQUIPO ELECTRICO 4

REF. NO.	PART NO. CODIGO Nº	DESCRIPTION DESCRIPCION	6JD1	6JE1				REMARKS OBSERVACIONES
27	69J–82587–00	GASKET EMPAQUETADURA	2	2				
28	63P–83614–01	BRACKET SOPORTE	1	1				
29	6DA–83614–00	BRACKET SOPORTE	1	1				
30	95D95–06012	BOLT, FLANGE DEEP RECESS CERROJO, REBORDE HUECO PROFUND	4	4				
31	63P–85886–00	SENSOR, AIR TEMPERATURE SENSOR	1	1				
32	6CE–14435–00	GROMMET ANILLO PROTECTOR	1	1				
33	90464–09129	CLAMP BRIDA	2	2				
34	6CB–81952–00	HOLDER, RELAY SOSTEN DE RELE	1	1				
35	95D95–06016	BOLT, FLANGE DEEP RECESS CERROJO, REBORDE HUECO PROFUND	1	1				

FIG. 22 ELECTRICAL 5 — EQUIPO ELECTRICO 5

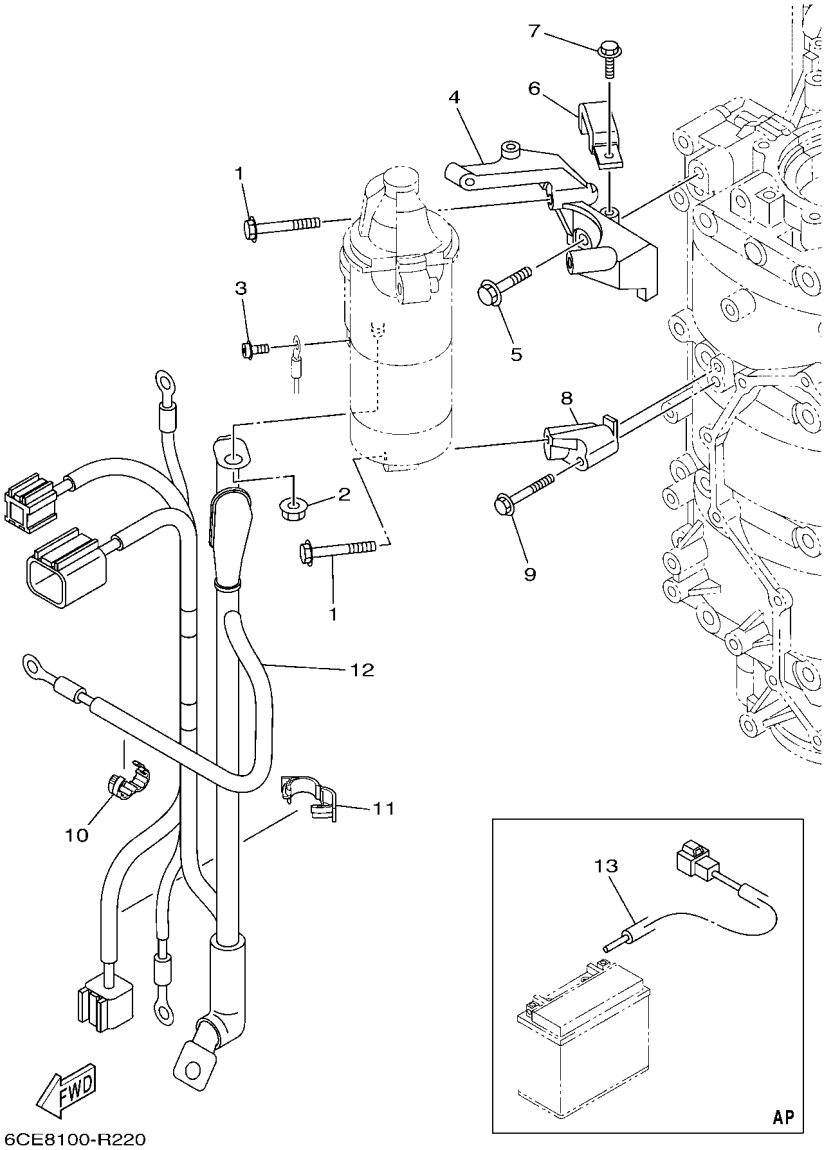

REF. NO.	PART NO. CODIGO Nº	DESCRIPTION DESCRIPCION	6JD1	6JE1				REMARKS OBSERVACIONES
1	97513–08545	BOLT, WITH WASHER PERNO CON ARANDELA	3	3				
2	90179–08003	NUT TUERCA	1	1				
3	97985–04308	SCREW, WITH WASHER TORNILLO, CON ARANDELA	1	1				
4	6CB–81822–02	BRACKET, STARTING MOTOR SOPORTE DE MOTOR DE ARRANQUE	1	1				
5	90105–08M87	BOLT, FLANGE TORNILLO	2	2				
6	6CB–81443–00	CLAMP, LEAD 1 GRAMPA DE CABLE 1	1	1				
7	95D95–06016	BOLT, FLANGE DEEP RECESS CERROJO, REBORDE HUECO PROFUND	1	1				
8	6CB–81823–A0	STAY, STARTING MOTOR SUPORTE	1	1				
9	90105–06151	BOLT, FLANGE TORNILLO	1	1				
10	90464–13227	CLAMP BRIDA	1	1				
11	90464–18004	CLAMP BRIDA	1	1				
12	6CE–8259M–00	WIRE HARNESS ASSY 2 ARNES DE CABLES	1	1				
13	6CE–81949–00	WIRE, LEAD (ISOLATOR CABLE) CABLE CONDUCTOR	1	1				AP AP

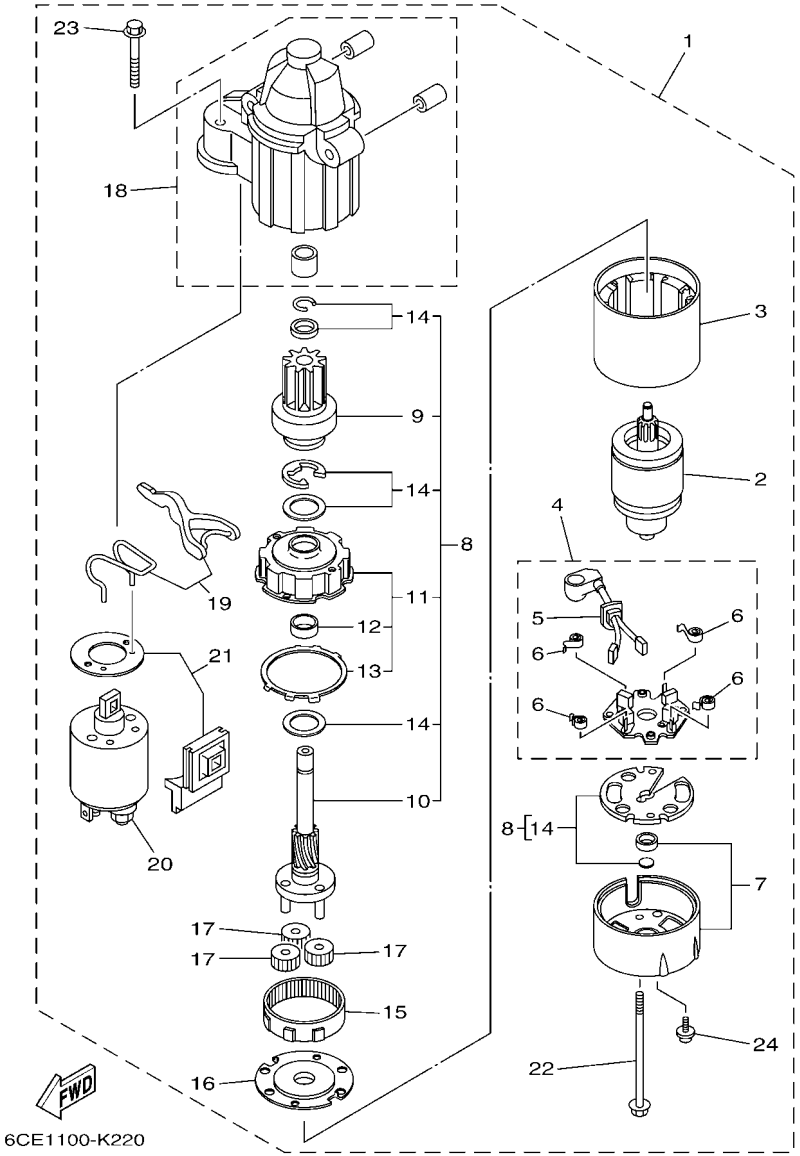

FIG. 23 STARTING MOTOR — MOTOR DE ARRANQUE

REF. NO.	PART NO. CODIGO Nº	DESCRIPTION DESCRIPCION	6JD1	6JE1				REMARKS OBSERVACIONES
1	6CE–81800–01	STARTING MOTOR ASSY MOTOR DE ARRANQUE COMPLETO	1	1				
2	6CE–81850–00	.ARMATURE ASSY .INDUCIDO COMPLETO	1	1				
3	6CE–81810–00	.STATOR ASSY .ESTATOR COMPLETO	1	1				
4	6CE–81840–01	.BRUSH HOLDER ASSY .SOSTEN DE ESCOBILLA COMPLETO	1	1				
5	6CE–81801–01	..BRUSH SET ..JUEGO DE ESCOBILLA	1	1				
6	67F–81813–00	..SPRING, BRUSH ..RESORTE DE ESCOBILLA	4	4				
7	6CE–81820–00	.REAR BRACKET ASSY .CUBIERTA TRASERA COMPL	1	1				
8	6CE–81807–00	.GEAR ASSY, STARTING MOTOR .PINON CONJUNTO	1	1				
9	6CB–81832–00	..CLUTCH, OVER RUN ..PINON COMPL	1	1				
10	6CB–81836–00	..SHAFT, PINION ..ARBOL, PINON	1	1				
11	6CE–81821–00	..BRACKET, CENTER 1 ..SOPORTE, CENTRO 1	1	1				
12	67F–81841–00	...BEARING ...PORTADOR	1	1				
13	67F–8183R–00	...GASKET ...EMPAQUETADURA	1	1				
14	6CB–81809–00	..WASHER KIT ..JUEGO DE ARANDELA	1	1				
15	67F–81891–00	.GEAR, RING .ENGRANAJE ANILLO	1	1				WITH 67F-8183R-00 WITH 67F-8183R-00
16	6CE–81830–00	.BRACKET, CENTER 2 .SOPORTE, CENTRO 2	1	1				
17	60V–8183T–00	.GEAR, IDLER .ENGRENAJE NEUTRO	3	3				
18	6CE–81842–00	.COVER .TAPA	1	1				
19	6CE–81839–00	.LEVER ASSY .PALANCA COMPL.	1	1				
20	6C5–81941–00	.STARTER RELAY ASSY .RELE DE ARRANQUE	1	1				
21	6CE–81869–00	.COVER, DUST .CUBIERTA PARA POLVO	1	1				
22	6CB–81826–00	.BOLT .PERNO	2	2				
23	69J–81828–00	.BOLT 2 .TORNILLO DE EMPUJE 2	2	2				
24	67F–81846–00	.SCREW .TORNILLO	2	2				

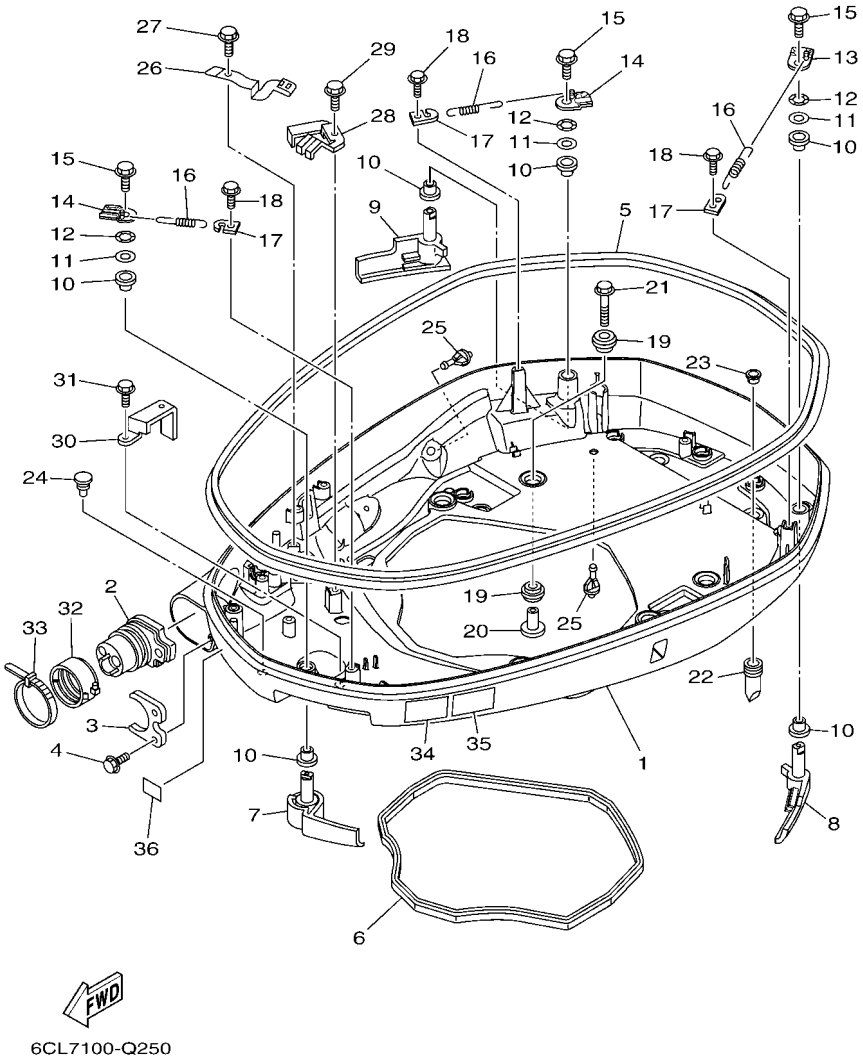

FIG. 24 BOTTOM COWLING 1 — CUBIERTA INFERIOR 1

REF. NO.	PART NO. CODIGO Nº	DESCRIPTION DESCRIPCION	6JD1	6JE1				REMARKS OBSERVACIONES
1	6CB–42710–00–8D	BOTTOM COWLING ASSY CUBIERTA INFERIOR COMPL.	1	1				
2	6CE–42725–02	GROMMET TAPON	1	1				
3	6CB–42761–00	STOPPER RETEN 1	1	1				
4	95D95–06014	BOLT, FLANGE DEEP RECESS CERROJO, REBORDE HUECO PROFUND	2	2				
5	6CB–42615–01	SEAL SELLO	1	1				
6	6CB–42716–00	RUBBER SEAL 1 SELLO DE GOMA 1	1	1				
7	6CB–42815–02–8D	LEVER, CLAMP 1 PALANCA ABRAZADERA 1	1	1				
8	6CB–42816–02–8D	LEVER, CLAMP 2 PALANCA ABRAZADERA 2	1	1				
9	6CB–42817–02–8D	LEVER, CLAMP 3 PALANCA ABRAZADERA 3	1	1				
10	90386–15M73	BUSH BUJE	6	6				
11	90201–156J2	WASHER, PLATE ARANDELA PLANA	3	3				
12	90206–15M18	WASHER, WAVE ARANDELA ONDULADA	3	3				
13	6CB–42818–00	LEVER, CLAMP 4 PALANCA, ABRAZADERA 4	1	1				
14	6CB–42819–00	LEVER, CLAMP 5 PALANCA ABRAZADERA 5	2	2				
15	95D95–08012	BOLT, FLANGE DEEP RECESS CERROJO, REBORDE HUECO PROFUND	3	3				
16	90506–22001	SPRING, TENSION RESORTE DE TENSION	3	3				
17	66T–43144–00	HOOK, SPRING GANCHO	3	3				
18	95D95–06012	BOLT, FLANGE DEEP RECESS CERROJO, REBORDE HUECO PROFUND	3	3				
19	90480–22M81	GROMMET TAPON	12	12				
20	90387–08M37	COLLAR ESPACIADOR	6	6				
21	90119–08M22	BOLT, WITH WASHER TORNILLO CON ARANDELA	6	6				
22	6DA–42717–00	RUBBER, SEAL 2 GOMA	2	2				
23	6DA–42384–00	SEAL, CAP SELLO DE TAPA	2	2				
24	6H4–42748–00	GROMMET TAPON	1	1				
25	6P2–44391–00	NIPPLE, HOSE NIPLE MANGUERA	2	2				
26	6CB–42743–00	BRACKET SOPORTE	1	1				
27	95D95–06012	BOLT, FLANGE DEEP RECESS CERROJO, REBORDE HUECO PROFUND	1	1				

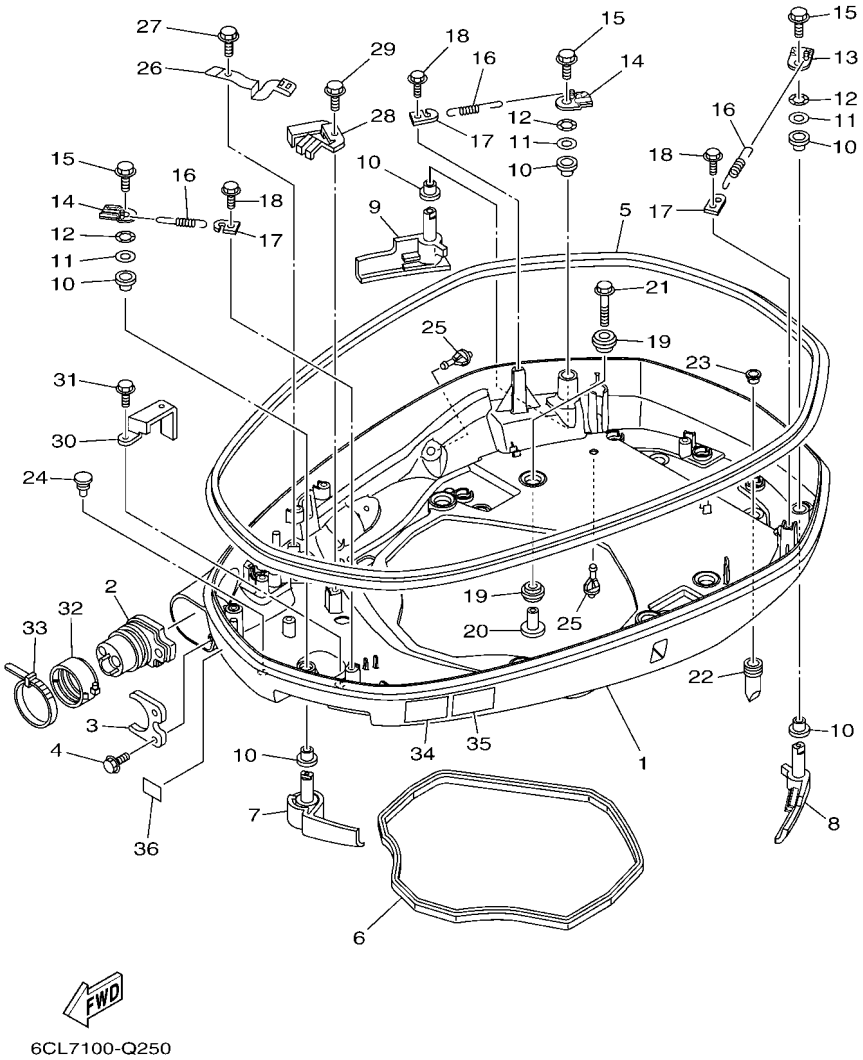

FIG. 24 BOTTOM COWLING 1 — CUBIERTA INFERIOR 1

REF. NO.	PART NO. CODIGO Nº	DESCRIPTION DESCRIPCION	6JD1	6JE1				REMARKS OBSERVACIONES
28	6CB–42766–00	BRACKET 2 SOPORTE 2	1	1				
29	95D95–06012	BOLT, FLANGE DEEP RECESS CERROJO, REBORDE HUECO PROFUND	1	1				
30	6CB–42756–00	STAY, CLAMP SOPORTE DE GRAMPA	1	1				
31	95D95–06012	BOLT, FLANGE DEEP RECESS CERROJO, REBORDE HUECO PROFUND	1	1				
32	68F–42753–00	FASTNER TIRADOR	1	1				AP AP
33	90464–20258	CLAMP BRIDA	1	1				AP AP
34	6EE–42794–40	LABEL, WARNING (GENERAL) ETIQUETA DE PRECAUCION	1	1				EXCEPT FOR BRA EXCEPT FOR BRA
	6AH–42794–70	LABEL, WARNING (GENERAL) ETIQUETA DE PRECAUCION	1	1				FOR BRA FOR BRA
35	6EE–42794–50	LABEL, WARNING (GENERAL) ETIQUETA DE PRECAUCION	1	1				FOR CAR FOR CAR
36	6AH–81996–00	MARK MARCA	1	1				FOR CAR FOR CAR

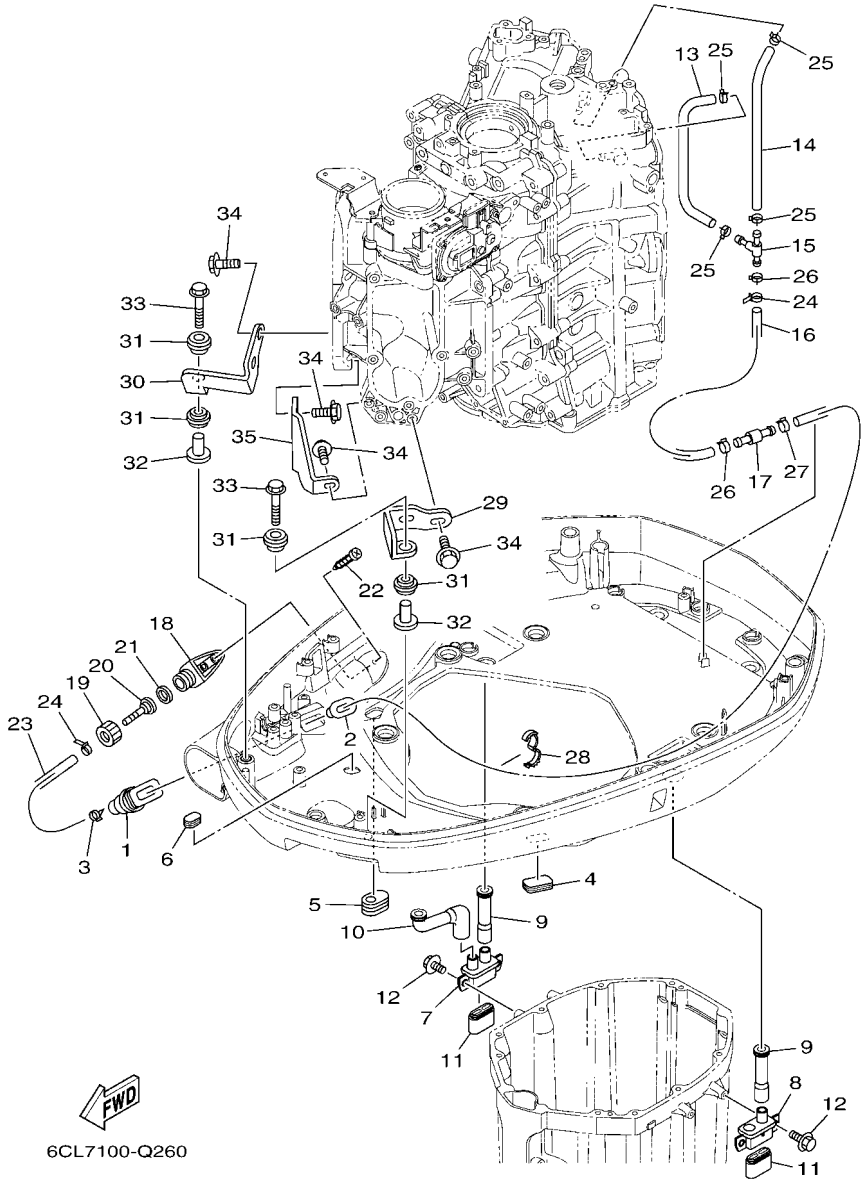

FIG. 25 BOTTOM COWLING 2 — CUBIERTA INFERIOR 2

REF. NO.	PART NO. CODIGO Nº	DESCRIPTION DESCRIPCION	6JD1	6JE1				REMARKS OBSERVACIONES
1	6H1–42726–21	GROMMET TAPON	1	1				
2	6BG–42384–00	SEAL, CAP SELLO DE TAPA	1	1				
3	90465–11M10	CLAMP BRIDA	2	2				
4	6H4–42726–00	GROMMET TAPON	1	1				
5	61A–42727–00	GROMMET TAPON	1	1				
6	64G–42727–00	GROMMET TAPON	1	1				
7	6CE–42733–00	BOX, DRAIN CAJA DE DRENAJE	1	1				
8	6CE–42734–00	BOX, DRAIN 2 CAJA DE DRENAJE 2	1	1				
9	6CE–42786–01	HOSE, DRAIN 1 TUBO DE DRENAJE 1	2	2				
10	6CE–42787–01	HOSE, DRAIN 2 TUBO DE DRENAJE 2	1	1				
11	69J–42717–00	RUBBER, SEAL 2 GOMA	2	2				
12	95D95–06016	BOLT, FLANGE DEEP RECESS CERROJO, REBORDE HUECO PROFUND	4	4				
13	6CB–24315–00	PIPE 5 TUBO DE DESAGUE	1	1				
14	90445–14021	HOSE (L185) TUBO (L185)	1	1				
15	6AW–42169–00	JOINT CONECTOR	1	1				
16	90445–16015	HOSE (L300) TUBO (L300)	1	1				
17	6AW–42785–00	PIPE TUBO	1	1				
18	6AW–12572–00	ADAPTER ADAPTADOR	1	1				
19	6R3–12581–00	JOINT, HOSE 1 CONEXION	1	1				
20	6AW–12582–00	JOINT, HOSE 2 CONEXION	1	1				
21	6R3–12583–00	GASKET, HOSE JOINT EMPAQUETADURA JUNTA DE MANGUE	1	1				
22	97780–60520	SCREW, TAPPING TORNILLO DE CABEZA DE CONO ACH	2	2				
23	90445–14019	HOSE (L1460) TUBO (L1460)	1	1				
24	90465–11M10	CLAMP BRIDA	2	2				
25	90467–130A5	CLIP PRESILLA	4	4				
26	90467–140A8	CLIP PRESILLA	2	2				
27	90467–140A9	CLIP PRESILLA	1	1				

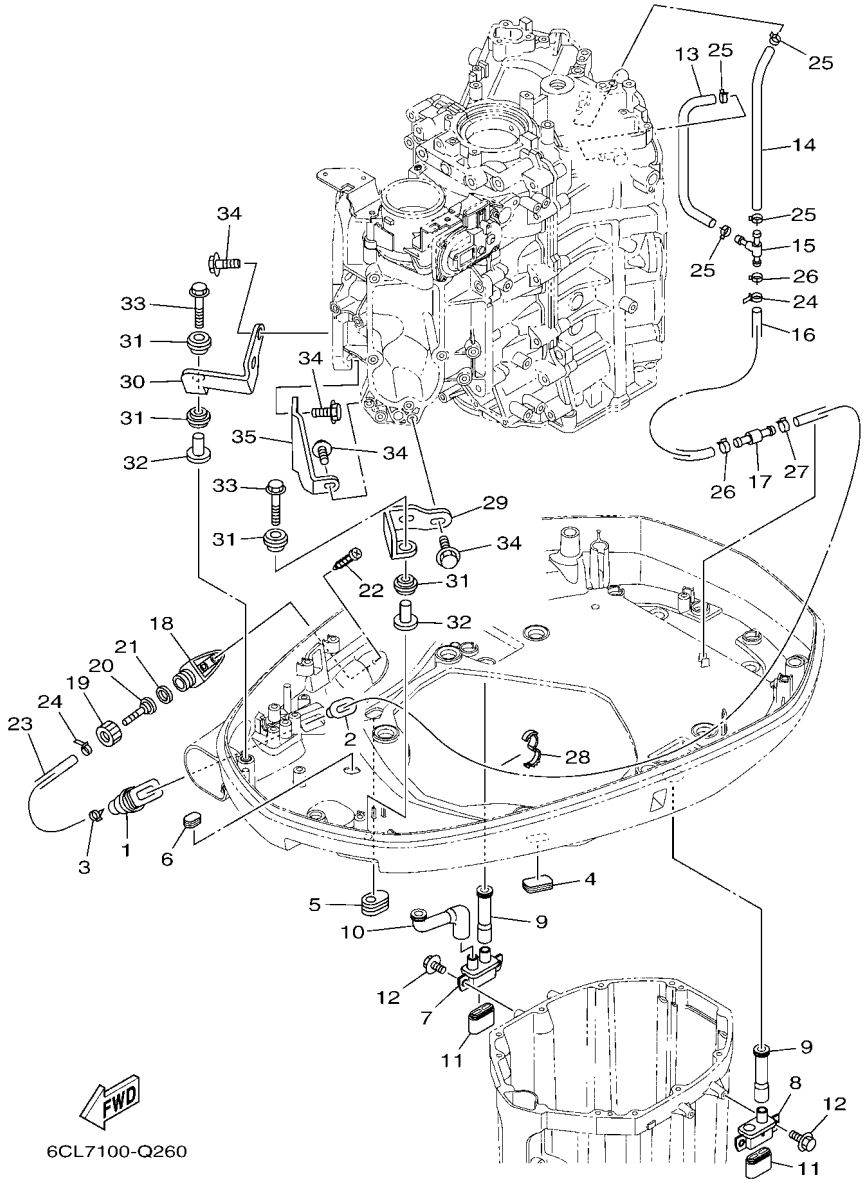

FIG. 25 BOTTOM COWLING 2 — CUBIERTA INFERIOR 2

REF. NO.	PART NO. CODIGO Nº	DESCRIPTION DESCRIPCION	6JD1	6JE1				REMARKS OBSERVACIONES
28	90464–16001	CLAMP BRIDA	1	1				
29	6CB–42643–00	PLATE, CLAMP PLACA GRAMPA	1	1				
30	6CB–42644–00	PLATE, CLAMP 2 PLACA GRAMPA 2	1	1				
31	90480–14029	GROMMET TAPON	4	4				
32	90387–06M03	COLLAR ESPACIADOR	2	2				
33	90119–06M61	BOLT, WITH WASHER TORNILLO CON ARANDELA	2	2				
34	90105–06039	BOLT, FLANGE TORNILLO	6	6				
35	6CB–42744–00	STAY SOPORTE	1	1				

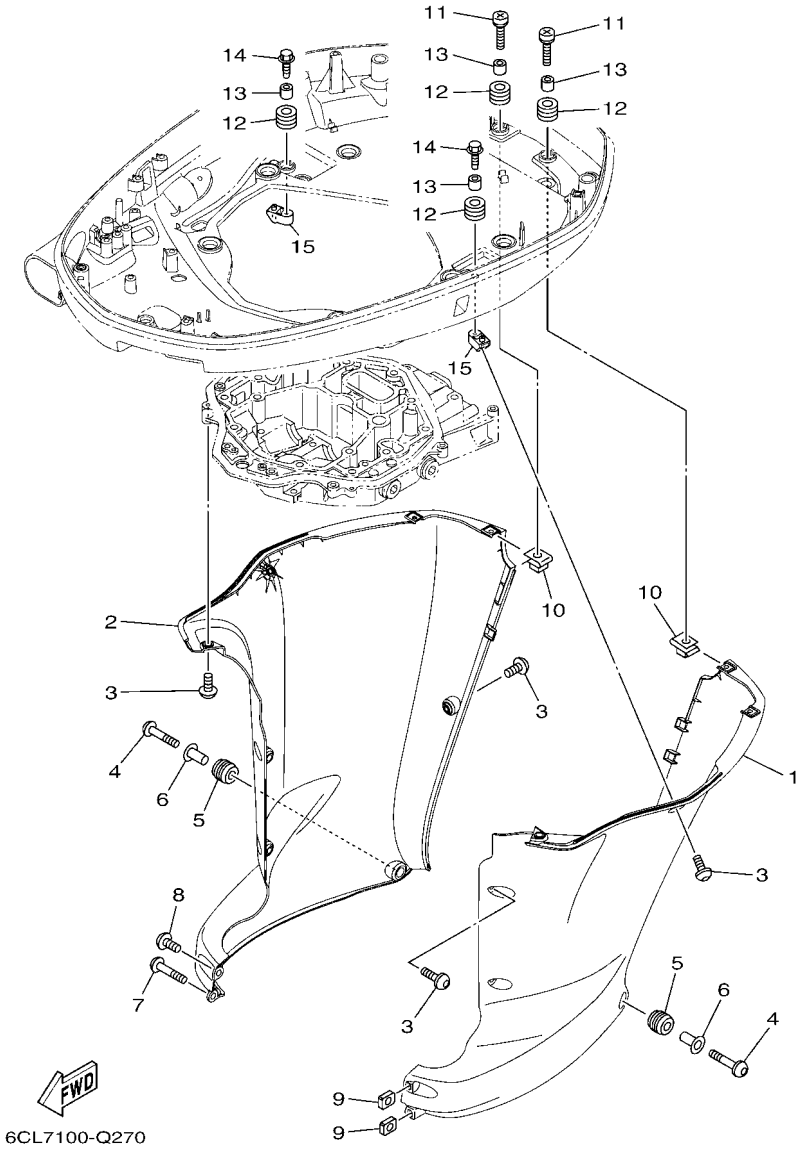

FIG. 26 BOTTOM COWLING 3 — CUBIERTA INFERIOR 3

REF. NO.	PART NO. CODIGO Nº	DESCRIPTION DESCRIPCION	6JD1	6JE1				REMARKS OBSERVACIONES
1	6CE–42741–01–8D	APRON MANDIL	1	1				
2	6CE–42771–01–8D	APRON MANDIL	1	1				
3	90111–06144	BOLT,HEX. SOCKET BUTTON TORNILLO	10	10				
4	90111–06142	BOLT,HEX. SOCKET BUTTON TORNILLO	2	2				
5	90480–16009	GROMMET TAPON	2	2				
6	90387–07028	COLLAR ESPACIADOR	2	2				
7	90111–06142	BOLT,HEX. SOCKET BUTTON TORNILLO	1	1				
8	90111–06144	BOLT,HEX. SOCKET BUTTON TORNILLO	1	1				
9	90173–06001	NUT, SQUARE TUERCA CUADRADA	2	2				
10	90183–061A6	NUT, SPRING TUERCA DE RESORTE	4	4				
11	90159–06053	SCREW, WITH WASHER TORNILLO CON VALONA	4	4				
12	90480–13M24	GROMMET TAPON	6	6				
13	90387–06M43	COLLAR ESPACIADOR	6	6				
14	90109–06M80	BOLT PERNO	2	2				
15	6CE–42774–A0	STAY, APRON 1 BUJEDEL PIVOTE DE LA FLECHA	2	2				

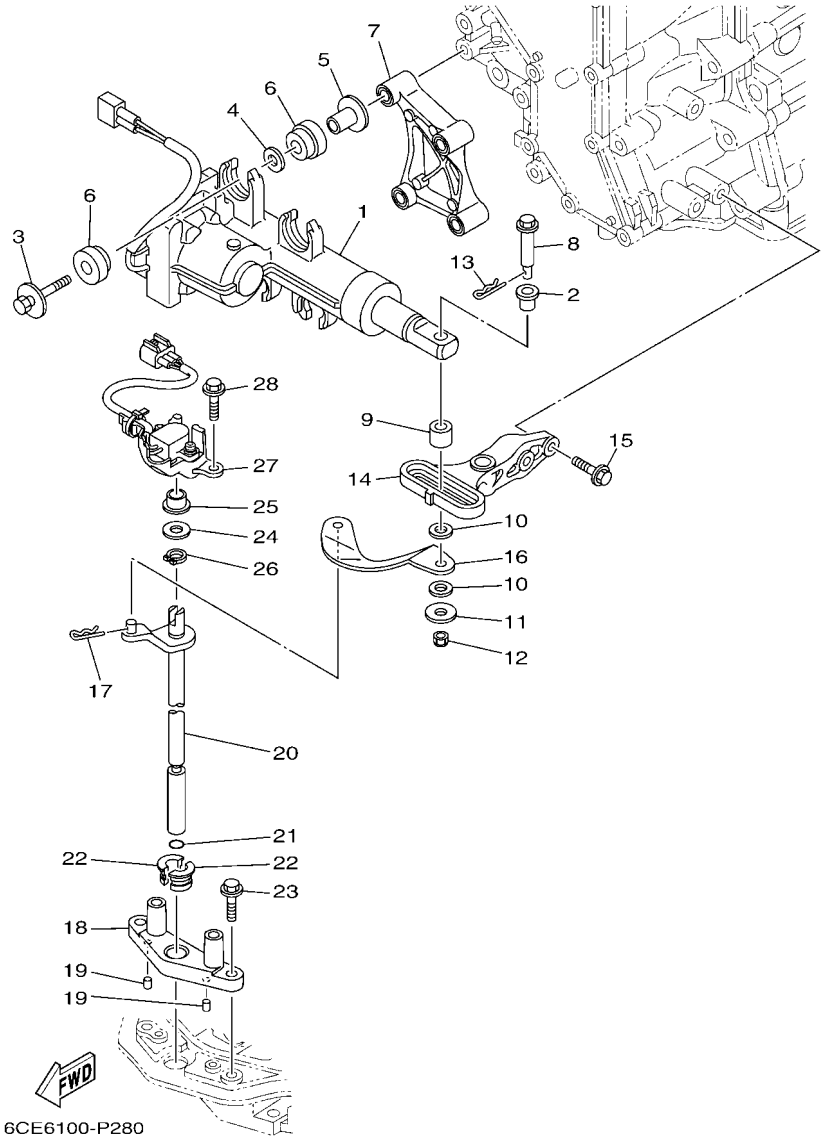

FIG. 27 CONTROL — CONTROL

REF. NO.	PART NO. CODIGO Nº	DESCRIPTION DESCRIPCION	6JD1	6JE1				REMARKS OBSERVACIONES
1	6DV–4820A–00	ACTUATOR UNIT UNIDAD DE ACTUADOR	1	1				
2	90386–08008	BUSH BUJE	1	1				
3	90119–08168	BOLT, WITH WASHER TORNILLO CON ARANDELA	4	4				
4	90201–12064	WASHER, PLATE ARANDELA PLANA	4	4				
5	90387–08104	COLLAR ESPACIADOR	4	4				
6	6CE–85564–00	GROMMET ANILLO PROTECTOR	8	8				
7	6CE–44142–20	JOINT CONECTOR	1	1				
8	6CE–42195–10	PIN, JOINT 1 PASADOR DE CONECTOR	1	1				
9	6CE–44122–20	BUSHING, SHIFT ROD LEVER BUJE PALANCA VARILLA DE CAMBIO	1	1				
10	90202–08M41	WASHER, PLATE ARANDELA DE PLANA	2	2				
11	90201–06068	WASHER, PLATE ARANDELA PLANA	1	1				
12	90185–06M07	NUT, SELF-LOCKING TUERCA AUTOBLOCANTE	1	1				
13	90468–18008	CLIP PRESILLA	1	1				
14	6CE–44117–10	BRACKET SOPORTE	1	1				
15	97E75–06525	BOLT, HEXAGON W/W DEEP RECESS TORNILLO HEXAGONAL CON RONDONA	2	2				
16	6CE–44121–10	LEVER, SHIFT ROD PALANCA VARILLA CAMBIOS	1	1				
17	90468–18008	CLIP PRESILLA	1	1				
18	6CE–44118–A0	BRACKET SOPORTE	1	1				
19	93604–07M13	PIN, DOWEL PASADOR DE CLAVIJA	2	2				
20	6JD–44120–00	HANDLE GEAR SHIFT ASSY MANIJA DE CAMBIO COMPL	1	1				
21	93210–09165	O-RING ANILLO O	1	1				
22	90386–11001	BUSH BUJE	2	2				
23	95D75–06025	BOLT, FLANGE DEEP RECESS CERROJO, REBORDE HUECO PROFUND	2	2				
24	90201–11008	WASHER, PLATE ARANDELA PLANA	1	1				
25	90386–10001	BUSH BUJE	1	1				
26	93410–10082	CIRCLIP SEGURO	1	1				
27	6CE–68303–00	SENSOR ASSY SENSOR COMP.	1	1				

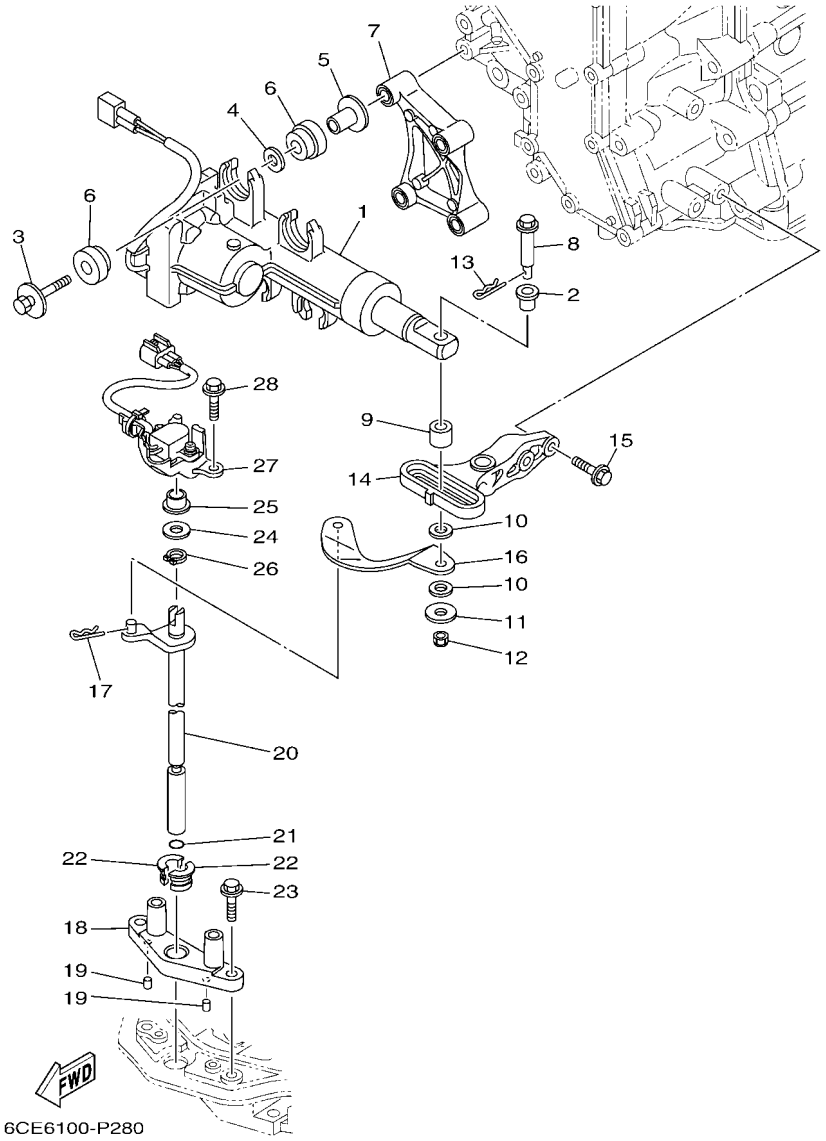

FIG. 27 CONTROL

CONTROL

REF. NO.	PART NO. CODIGO Nº	DESCRIPTION DESCRIPCION	6JD1	6JE1				REMARKS OBSERVACIONES
28	95D75–06025	BOLT, FLANGE DEEP RECESS CERROJO, REBORDE HUECO PROFUND	2	2				

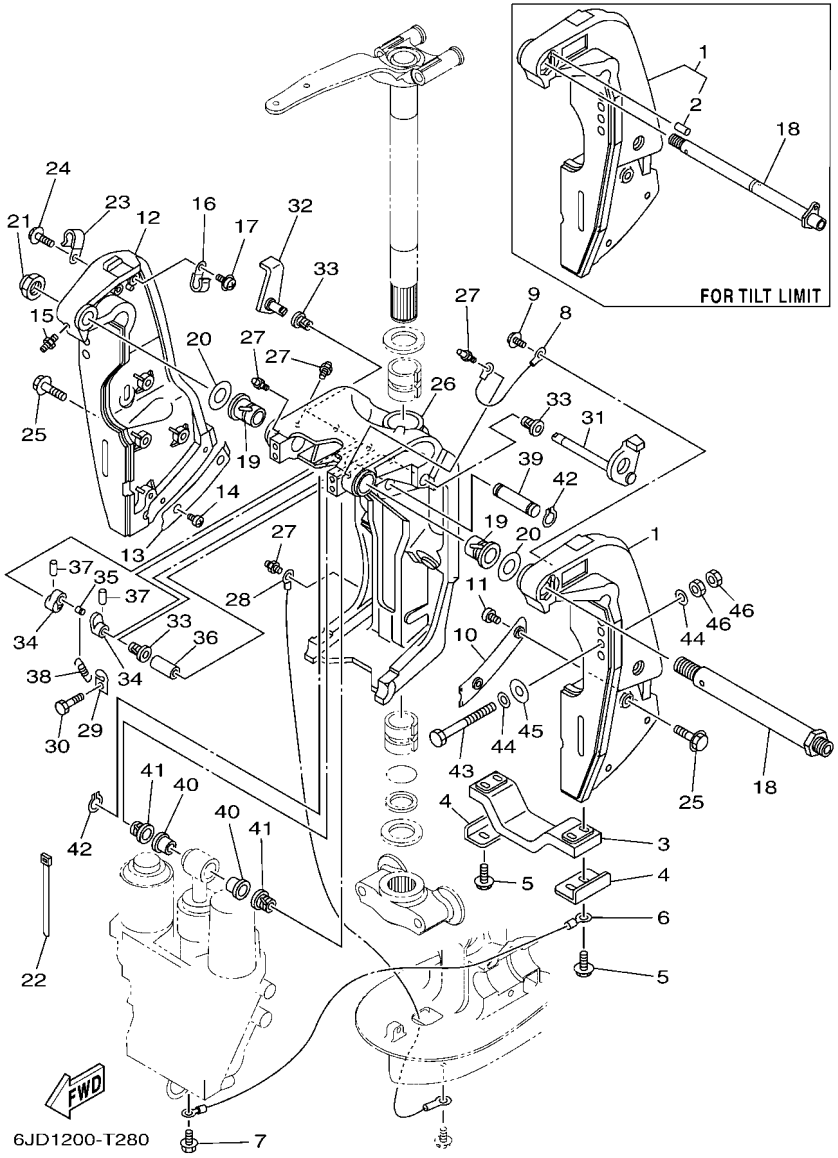

FIG. 28 BRACKET 1 — SOPORTE 1

REF. NO.	PART NO. CODIGO Nº	DESCRIPTION DESCRIPCION	6JD1	6JE1				REMARKS OBSERVACIONES
1	69J–43111–03–8D	BRACKET, CLAMP 1 SOPORTE DE LA ABRAZADERA 1	1	1				
	69J–43111–11–8D	BRACKET, CLAMP 1 SOPORTE DE LA ABRAZADERA 1	1	1				FOR TILT LIMIT FOR TILT LIMIT
2	93606–19002	.PIN, DOWEL .PASADOR DE CLAVIJA	1	1				FOR TILT LIMIT FOR TILT LIMIT
3	6G5–45251–02	ANODE CATODE	1	1				
4	6G5–44526–00	PLATE PLACA 1	2	2				
5	97E95–06525	BOLT, HEXAGON W/W DEEP RECESS TORNILLO HEXAGONAL CON RONDONA	4	4				
6	6H1–82148–00	WIRE, LEAD 4 CABLE CONDUCTOR 4	1	1				
7	97E95–06510	BOLT, HEXAGON W/W DEEP RECESS TORNILLO HEXAGONAL CON RONDONA	1	1				
8	6E5–82148–00	WIRE, LEAD 4 CABLE CONDUCTOR 4	1	1				
9	97985–06212	SCREW, WITH WASHER TORNILLO, CON ARANDELA	1	1				
10	61A–43132–00	WASHER, FRICTION ARANDELA DE FRICCION	1	1				
11	97885–06010	SCREW, PAN HEAD TORNILLO A MUESCA	2	2				
12	69J–43112–02–8D	BRACKET, CLAMP 2 SOPORTE DE LA ABRAZADERA 2	1	1				
13	61A–43133–00	WASHER,FRICTION RONDANA	1	1				
14	97885–06010	SCREW, PAN HEAD TORNILLO A MUESCA	2	2				
15	93700–06002	NIPPLE, GREASE BOQUILLA DE ENGRASAR	1	1				
16	90465–08M83	CLAMP BRIDA	1	1				
17	97985–06212	SCREW, WITH WASHER TORNILLO, CON ARANDELA	1	1				
18	6R3–43131–00	BOLT, CLAMP BRACKET TORNILLO DE ABRAZADERA DEL SOP	1	1				
	6R3–43131–30	BOLT, CLAMP BRACKET TORNILLO DE ABRAZADERA DEL SOP	1	1				FOR TILT LIMIT FOR TILT LIMIT
19	90386–25M31	BUSH BUJE	2	2				
20	90201–26M59	WASHER, PLATE ARANDELA PLANA	2	2				
21	90185–22M11	NUT, SELF-LOCKING TUERCA AUTOBLOCANTE	1	1				
22	90465–11M10	CLAMP BRIDA	4	4				
23	90465–08M83	CLAMP BRIDA	1	1				
24	97E95–06514	BOLT, HEXAGON W/W DEEP RECESS TORNILLO HEXAGONAL CON RONDONA	1	1				
25	90119–10024	BOLT, WITH WASHER TORNILLO CON ARANDELA	8	8				

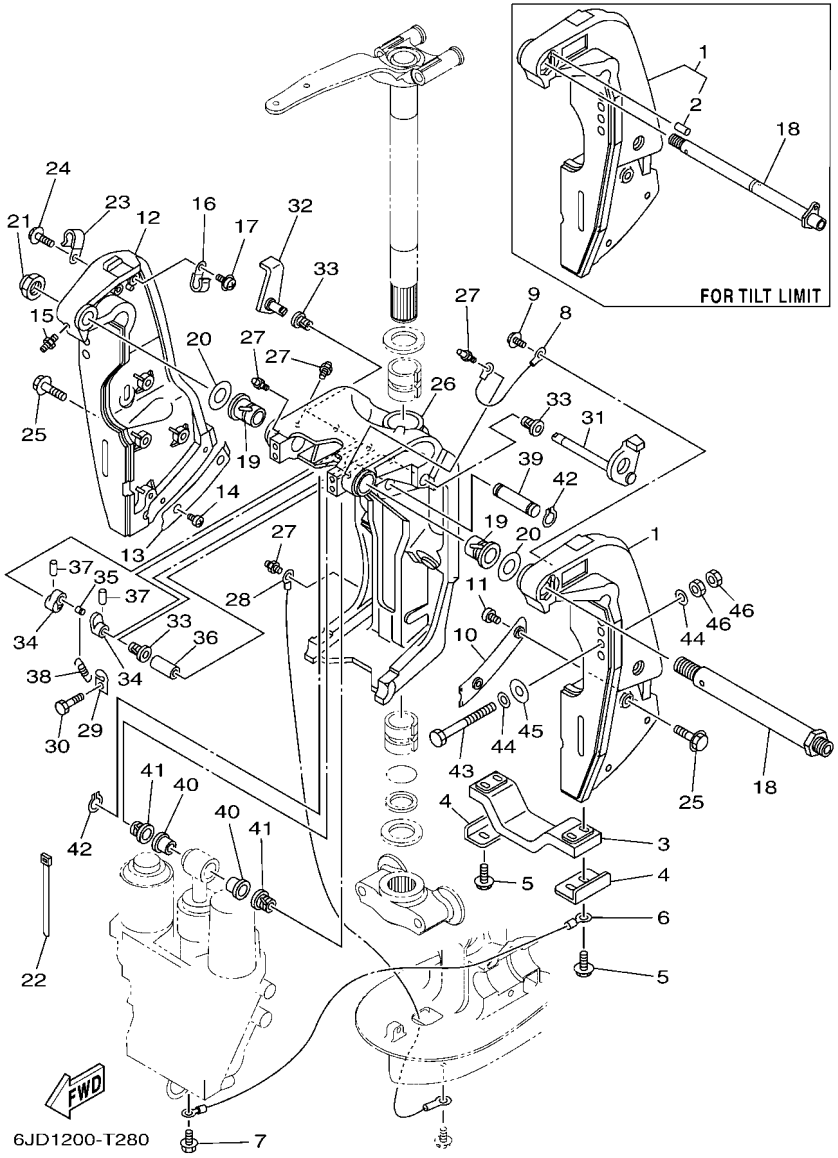

FIG. 28 BRACKET 1 SOPORTE 1

REF. NO.	PART NO. CODIGO Nº	DESCRIPTION DESCRIPCION	6JD1	6JE1				REMARKS OBSERVACIONES
26	61A–43311–22–8D	BRACKET, SWIVEL 1 SOPORTE GIRATORIO 1	1	1				
27	93700–06002	NIPPLE, GREASE BOQUILLA DE ENGRASAR	5	5				
28	69J–82147–00	WIRE, LEAD 5 CABLE CONDUCTOR 5	1	1				
29	6G5–43144–00	HOOK, SPRING GANCHO	1	1				
30	97D95–06010	BOLT, HEXAGON DEEP RECESS TORNILLO HEXAGONAL	1	1				
31	61A–43181–01	LEVER, TILT STOP 1 PALANCA TOPE INCLINACION 1	1	1				
32	6G5–43185–02	LEVER, TILT STOP 2 PALANCA TOPE INCLINACION 2	1	1				
33	90386–10M16	BUSH BUJE	3	3				
34	6G5–43148–00	COLLAR, DISTANCE COLLAR	2	2				
35	90249–06M19	PIN PASADOR	1	1				
36	90387–10M05	COLLAR ESPACIADOR	1	1				
37	91690–30020	PIN, SPRING PASADOR DE RESORTE	2	2				
38	90506–16003	SPRING, TENSION RESORTE DE TENSION	1	1				
39	6E5–43126–10	PIN, UPPER SHOCK MOUNT PASADOR DE AMORTIGUADOR SUPERI	1	1				
40	90386–18M63	BUSH BUJE	2	2				
41	90386–18M14	BUSH BUJE	2	2				
42	93410–18M05	CIRCLIP SEGURO	2	2				
43	90101–12M05	BOLT (L:130MM) TORNILLO (L:130MM)	4	4				UR FOR CAR UR FOR CAR
	90101–12047	BOLT (L:150MM) TORNILLO (L:150MM)	4	4				UR FOR NME,BRA UR FOR NME,BRA
	90101–12M05	BOLT (L:130MM) TORNILLO (L:130MM)	2	2				UR FOR OTH UR FOR OTH
	90101–12047	BOLT (L:150MM) TORNILLO (L:150MM)	2	2				UR FOR OTH UR FOR OTH
44	90201–13M01	WASHER, PLATE ARANDELA PLANA	8	8				
45	90201–12426	WASHER, PLATE ARANDELA PLANA	4	4				
46	95380–12600	NUT TUERCA	8	8				

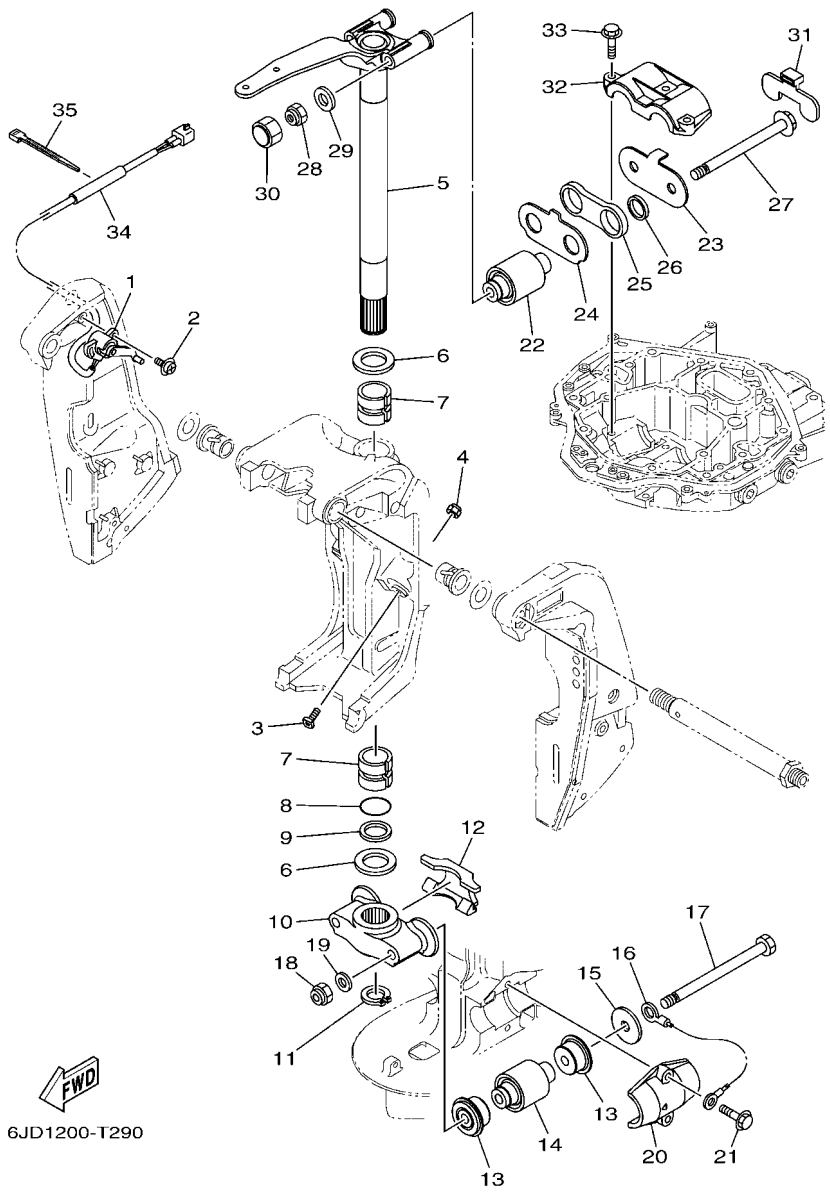

FIG. 29 BRACKET 2 — SOPORTE 2

REF. NO.	PART NO. CODIGO Nº	DESCRIPTION DESCRIPCION	6JD1	6JE1				REMARKS OBSERVACIONES
1	69J–83672–11	TRIM SENDER TRANSMISOR DE INCLINADOR	1	1				
2	97985–06216	SCREW, WITH WASHER TORNILLO, CON ARANDELA	2	2				
3	61A–43376–00	BOLT, THRUST RECEIVER TORNILLO RECEPTOR	2	2				Go to P/N : PE0-OM-220001
4	95780–10300	NUT, FLANGE TUERCA	2	2				
5	6CE–42510–00–8D	STEERING BRACKET ASSY SOPORTE DIRECCION COMPL.	1	1				
6	90201–40M00	WASHER, PLATE ARANDELA PLANA	2	2				
7	90386–39M89	BUSH BUJE	2	2				
8	93210–35321	O-RING ANILLO O	1	1				
9	90202–40M47	WASHER, PLATE ARANDELA DE PLANA	1	1				
10	6CE–44551–00–CA	HOUSING, LOWER MOUNT RUBBER 1 CAJA AMORTIGUADOR INFERIOR HU	1	1				
11	93410–37M04	CIRCLIP SEGURO	1	1				
12	6CE–44574–00	STOPPER, LOWER MOUNT RUBBER TOPE	1	1				
13	6CE–44575–00	DAMPER, LOWER MOUNT RUBBER AMORTIGUADOR INFERIOR	4	4				
14	6CE–44555–00	MOUNT DAMPER, LOWER SIDE AMORTIGUADOR DE HULE LADO INFE	2	2				
15	90201–16032	WASHER, PLATE ARANDELA PLANA	2	2				
16	6AW–82149–00	WIRE, LEAD 3 CABLE CONDUCTOR 3	1	1				
17	90101–14004	BOLT TORNILLO	2	2				
18	90185–14M00	NUT, SELF-LOCKING TUERCA AUTOBLOCANTE	2	2				
19	92995–14600	WASHER ARANDELA	2	2				
20	6CE–44552–00–CA	HOUSING, LOWER MOUNT RUBBER 2 CAJA AMORTIGUADOR INFERIOR HU	2	2				
21	90119–10024	BOLT, WITH WASHER TORNILLO CON ARANDELA	4	4				
22	6CE–44514–00	MOUNT DAMPER, UPPER SIDE AMORTIGUADOR LADO SUPERIOR	2	2				
23	6CE–44526–00	PLATE PLACA 1	1	1				
24	6CE–44536–00	PLATE 2 PLACA 2	1	1				
25	6CE–44532–00	STOPPER, UPPER MOUNT RETEN	1	1				
26	90387–28013	COLLAR ESPACIADOR	2	2				
27	90105–14005	BOLT, FLANGE TORNILLO	2	2				

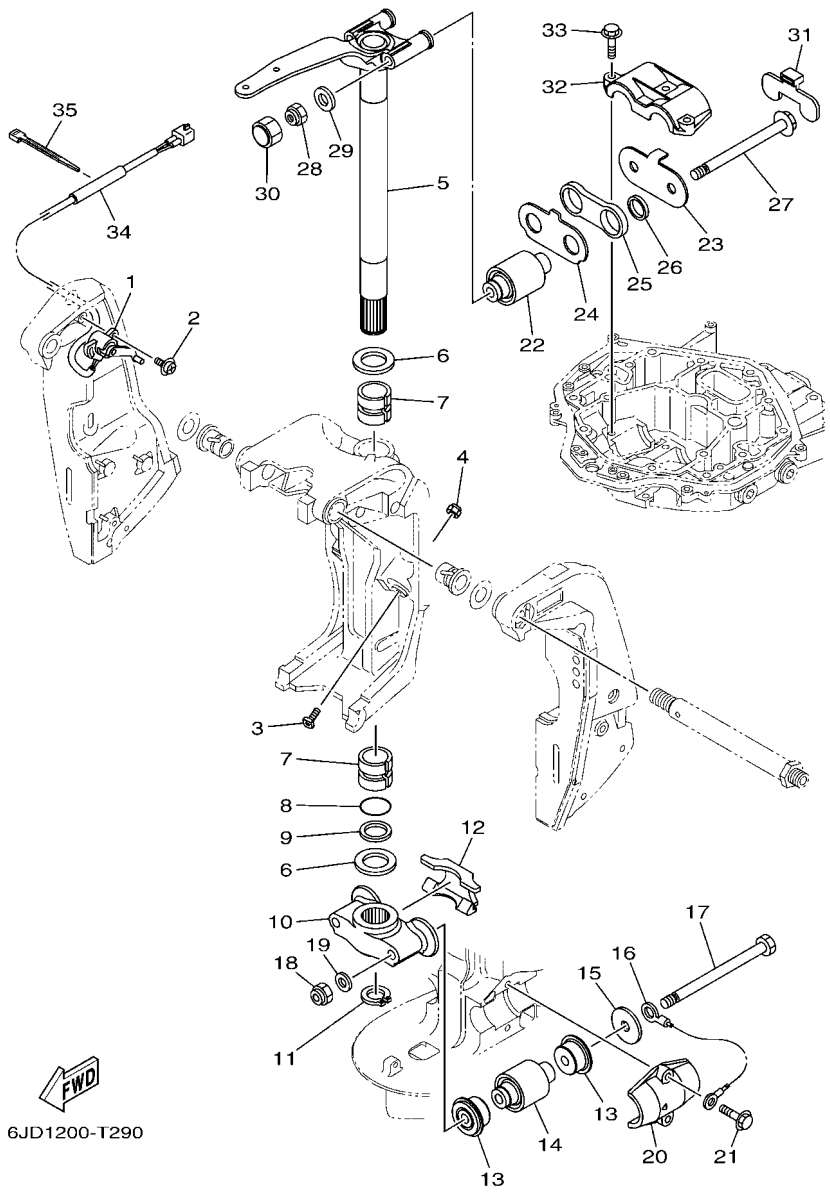

FIG. 29 BRACKET 2 — SOPORTE 2

REF. NO.	PART NO. CODIGO Nº	DESCRIPTION DESCRIPCION	6JD1	6JE1				REMARKS OBSERVACIONES
28	90185–14M00	NUT, SELF-LOCKING TUERCA AUTOBLOCANTE	2	2				
29	92995–14600	WASHER ARANDELA	2	2				
30	6CE–44194–00	CAP TAPA	2	2				
31	6CE–44533–00	DAMPER, UPPER MOUNT RUBBER AMORTIGUADOR SUPERIOR	1	1				
32	6CE–44511–00	COVER, UPPER MOUNT CUBIERTA AMORTIGUADOR SUPERIOR	1	1				
33	90119–10024	BOLT, WITH WASHER TORNILLO CON ARANDELA	3	3				
34	90446–15003	HOSE (L100) TUBO (L100)	1	1				
35	90465–11M10	CLAMP BRIDA	1	1				

PARTS NEWS

YAMAHA
YAMAHA MOTOR CO., LTD.
2500 SHINGAI IWATA SHIZUOKA JAPAN

News No. PE0-OM-220001(1/3)

Date:2022/01/17

Signature:T.Ogomori

Cause : ☑ Revision Notice ☐ Correction ☐ Sales Unit Change ☐ Others

Model	See the"List of Models and CATALOGUE No's below."
Subject	PARTS CATALOGUE CORRECTIONS
CATALOGUE NO.	See the"List of Models and CATALOGUE No's below."

Time of YPEC Revision Text, Illustration --> Feb./14/2022 PDF Replace --> Feb./14/2022

(YPEC = Yamaha Parts Electrical Catalogue = Website parts catalogue)

Applicable Engine Serial No.

MODEL NAME	MODEL CODE	Applicable Engine Serial No.
F200BET	6S1F	6S1-1009779 and following
FL200BET	6S2F	6S2-1003042 and following
F200A, F200CET	6ALF	6AL-1006875 and following
LF200A, FL200CET	6AMF	6AM-1000713 and following
F225BET	6ASE	6AS-1006036 and following
FL225BET	6ATE	6AT-1000578 and following
VF200A-2019	6JV1	6JV-1000149 and following
F225CA, F225FET	6CLA	6CL-1005436 and following
LF225CA, FL225FET	6CMA	6CM-1001037 and following
F250CA, F250DET	6CGA	6CG-1021277 and following
LF250CA, FL250DET	6CHA	6CH-1004336 and following
F225B, F225HET	6HB4	6HB-1000585 and following
LF225B, FL225HET	6HC4	6HC-1000008 and following
F250AET	6P2G	6P2-1042900 and following
F250HET	6FJ3	6DX-1010946 and following
FL250HET	6FK3	6DY-1004227 and following
VF250A	6FR5	6FR-1008535 and following
F250B, F250LET	6HD4	6HD-1006259 and following
LF250B, FL250LET	6HE4	6HE-1000526 and following
F300CA, F300BET	6CEA	6CE-1069657 and following
LF300CA, FL300BET	6CFA	6CF-1018346 and following
F300A, F300CET	6JA3	6JA-1001488 and following
LF300A,FL300CET	6JB3	6JB-1000281 and following
F300DET	6JD1	6JD-1000627 and following
FL300DET	6JE1	6JE-1000322 and following

*1: Interchangeability

A	Old Parts →	Old Parts
	New Parts →	New Parts
B	Old Parts →	Old Parts
	New Parts →	New Parts
C	Old Parts →	Old Parts
	New Parts →	New Parts
	These parts are interchangeable with a set	

BRACKET 2

1. LIST CORRECTION

Ref. No.	OLD P/No.	NEW P/No.	DESCRIPTION	Q'TY	REMARKS
3	61A-43376-00	6AW-43376-00	BOLT, THRUST RECEIVER	2	*Part number revision

Parts Manager Check	Service Manager Check	Parts Manager File

YAMAHA MOTOR CO.,LTD
Spare Parts Section
Technical & New Model Info. Gr., YMC

YAMAHA GENUINE Parts & Accessories

PARTS NEWS

YAMAHA
YAMAHA MOTOR CO., LTD.
2500 SHINGAI IWATA SHIZUOKA JAPAN

News No. PE0-OM-220001(2/3)

Date:2022/01/17

Signature:T.Ogomori

Cause : ☑ Revision Notice ☐ Correction ☐ Sales Unit Change ☐ Others

Model	See the"List of Models and CATALOGUE No's below."
Subject	PARTS CATALOGUE CORRECTIONS
CATALOGUE NO.	See the"List of Models and CATALOGUE No's below."

Time of YPEC Revision Text, Illustration --> Feb./14/2022 PDF Replace --> Feb./14/2022

(YPEC = Yamaha Parts Electrical Catalogue = Website parts catalogue)

2. LIST of Models and CATALOGUE No's.

The applicable MODELS, MODEL CODES, and CATALOGUE No's are as follows.

MODEL NAME	MODEL CODE	MODEL YEAR	CATALOGUE NO.	FIG.NO.
F200BET	6S1F	2019	1T6S1-200SA	27
FL200BET	6S2F		1T6S1-415MA	
F200A	6ALF	2019	1T6AL-100EA	27
LF200A	6AMF		1T6AM-100EA	
F200CET F225BET FL200CET FL225BET	6ALF 6ASE 6AMF 6ATE		1T6AL-300FA 1T6AL-200SA	
VF200A	6JV1	2019	1T6JV-100EA	29
F225CA	6CLA	2019	1T6CL-100EA	30
LF225CA	6CMA		1T6CM-100EA	29
F250CA	6CGA		1T6CG-100EA	30
LF250CA	6CHA		1T6CH-100EA	29
F225FET	6CLA		1T6CL-300FA	30
FL225FET	6CMA		1T6CL-200SA	29
F225FET F250DET FL225FET FL250DET	6CLA 6CGA 6CMA 6CHA		1T6CL-370EA	29
F250DET	6CGA		1T6CG-300FA	30
FL250DET	6CHA		1T6CG-200SA	29
F225B	6HB4	2019	1T6HB-100EA	29
LF225B	6HC4		1T6HC-100EA	
F225HET	6HB4		1T6HB-300FA	
FL225HET	6HC4			
F250AET	6P2G	2019	1T6P2-280PA	27
F250HET	6FJ3	2019	1T6FJ-200SA	27
FL250HET	6FK3		1T6FJ-415MA	
VF250A	6FR5	2019	1T6FR-100EA	29

Parts Manager Check | Service Manager Check | Parts Manager File

YAMAHA MOTOR CO.,LTD
Spare Parts Section
Technical & New Model Info. Gr., YMC

YAMAHA GENUINE Parts & Accessories

PARTS NEWS

YAMAHA MOTOR CO., LTD.
2500 SHINGAI IWATA SHIZUOKA JAPAN

News No. PE0-OM-220001(3/3)

Date:2022/01/17

Signature:T.Ogomori

Cause : ☑ Revision Notice ☐ Correction ☐ Sales Unit Change ☐ Others

Model	See the"List of Models and CATALOGUE No's below."
Subject	PARTS CATALOGUE CORRECTIONS
CATALOGUE NO.	See the"List of Models and CATALOGUE No's below."

Time of YPEC Revision Text, Illustration --> Feb./14/2022 PDF Replace --> Feb./14/2022
(YPEC = Yamaha Parts Electrical Catalogue = Website parts catalogue)

2. LIST of Models and CATALOGUE No's.

The applicable MODELS, MODEL CODES, and CATALOGUE No's are as follows.

MODEL NAME	MODEL CODE	MODEL YEAR	CATALOGUE NO.	FIG.NO.
F250B	6HD4	2019	1T6HD-100EA	29
LF250B	6HE4		1T6HE-100EA	
F250LET	6HD4		1T6HD-300FA	
FL250LET	6HE4		1T6HD-280PA	
F300CA	6CEA	2019	1T6CE-100EA	30
LF300CA	6CFA		1T6CF-100EA	29
F300BET	6CEA		1T6CE-300FA	31
FL300BET	6CFA		1T6CE-200SA	29
F300A	6JA3	2019	1T6JA-100EA	29
LF300A	6JB3		1T6JB-100EA	
F300CET	6JA3		1T6JA-300FA	
FL300CET	6JB3			
F300DET	6JD1	2019	1T6JD-200SA	29
FL300DET	6JE1		1T6JD-664EA	

Thank you very much for your cooperation.

Parts Manager Check	Service Manager Check	Parts Manager File

YAMAHA MOTOR CO.,LTD
Spare Parts Section
Technical & New Model Info. Gr., YMC

YAMAHA GENUINE Parts & Accessories

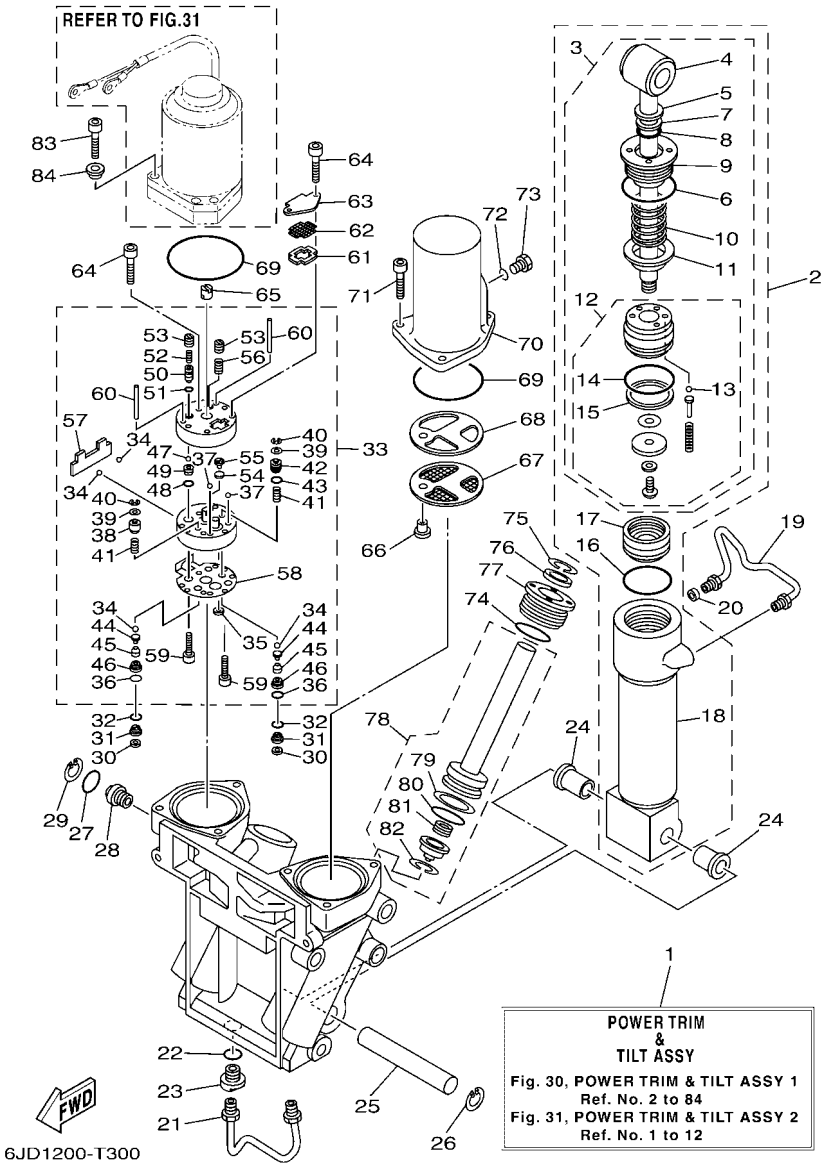

FIG. 30 POWER TRIM & TILT ASSY 1 — COMPONER Y PODER VARILLA 1

REF. NO.	PART NO. CODIGO Nº	DESCRIPTION DESCRIPCION	6JD1	6JE1				REMARKS OBSERVACIONES
1	69J–43800–10–8D	POWER TRIM & TILT ASSY ELEVADOR HIDRAULICO COMPL.	1	1				
2	6CE–43840–00	POWER TILT ASSY CONJUNTO COMPONER	1	1				
3	6CE–43810–00	.TILT PISTON SUB ASSY .ELEVADOR SUB-PISTON COMPL.	1	1				
4	69J–43801–01	..ROD ..VALILLA COMPL INCLINACION	1	1				
5	93106–19N50	..OIL SEAL ..SELLO ACEITE	1	1				
6	63P–43861–20	..O-RING ..ANILLO EN O 1	1	1				
7	6H1–43872–00	..RING, BACK UP ..ANILLO	1	1				
8	61A–4389H–01	..O-RING ..ANILLO EN O	1	1				
9	61A–43811–00	..SCREW, CYLINDER END ..TORNILLO CILINDRO EXTREMO	1	1				
10	69J–4384H–00	..SPRING ..RESORTE	1	1				
11	69J–4382E–00	..ADAPTOR 2 ..ADAPTADOR 2	1	1				
12	6CE–4380P–00	..PISTON SUB ASSY ..SUB-PISTON COMPL	1	1				
13	93505–32038	...BALL ...BOLA	5	5				
14	61A–43861–00	...O-RING ...ANILLO EN O 1	1	1				
15	61A–43871–00	...RING, BACK UP ...ANILLO	1	1				
16	61A–43861–00	.O-RING .ANILLO EN O 1	1	1				
17	6H1–43814–11	.PISTON, FREE .PISTON LIBRE	1	1				
18	61A–43813–02	.CYLINDER, TILT .CILINDRO INCLINACION	1	1				
19	69J–43835–10	PIPE TUBO 3	1	1				
20	69J–4388J–00	PLUG 2 TAPON 2	1	1				
21	69J–43833–02	PIPE TUBO 1	1	1				
22	93210–17239	O-RING ANILLO O	1	1				
23	69J–4388E–01	BOLT ,SCREW PERNO	1	1				
24	90386–18M14	BUSH BUJE	2	2				
25	61A–43818–00	PIN, LOWER SHOCK MOUNT PASADOR AMORTIGUADOR INFERIOR	1	1				
26	61A–43876–00	RING, SNAP ANILLO	1	1				
27	6D8–43863–00	O-RING ANILLO EN O 3	1	1				

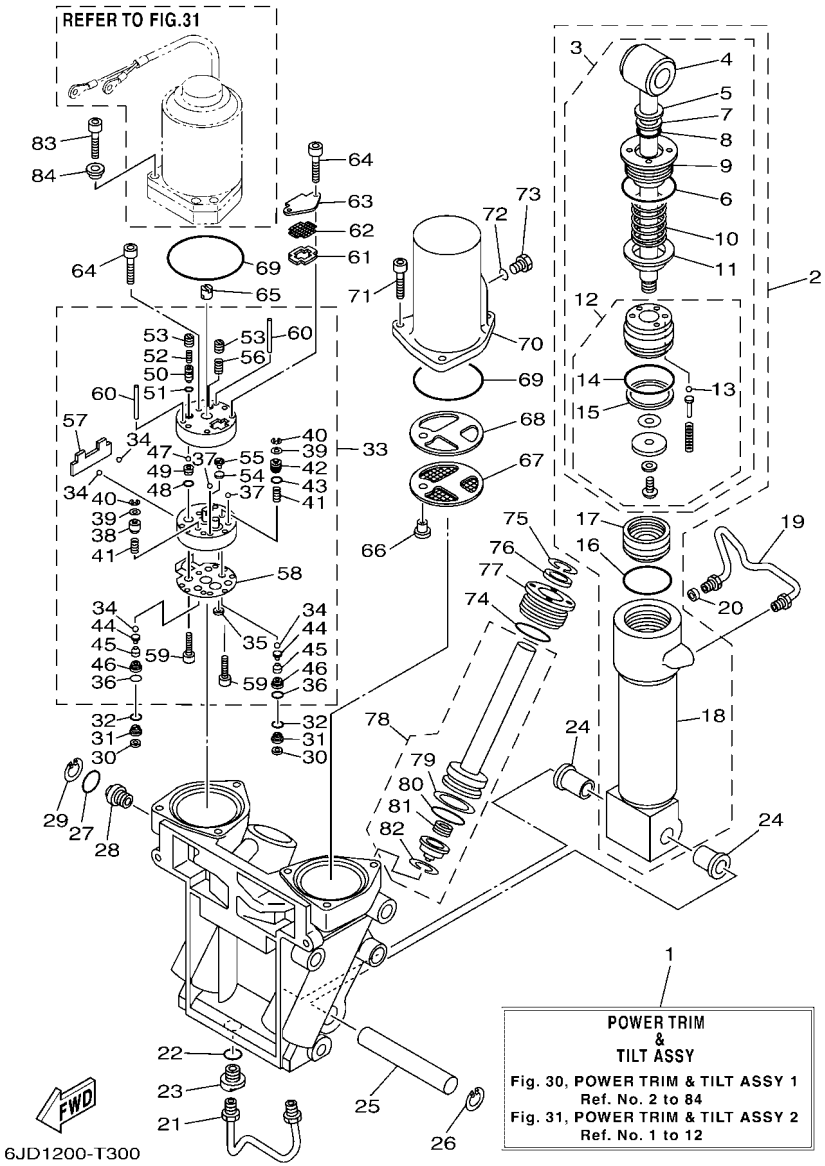

FIG. 30 POWER TRIM & TILT ASSY 1 — COMPONER Y PODER VARILLA 1

REF. NO.	PART NO. CODIGO Nº	DESCRIPTION DESCRIPCION	6JD1	6JE1				REMARKS OBSERVACIONES
28	69J–43845–00	SCREW, MANUAL RELEASE TORNILLO DESCOPLO MANUAL	1	1				
29	6H1–43875–00	RING, SNAP ANILLO	1	1				
30	69J–4381C–00	FILTER 3 FIELTRO 3	2	2				
31	69J–43899–01	PLATE STOPPER PLACA	2	2				
32	69J–4389J–00	O-RING ANILLO O	2	2				
33	69J–43830–01	GEAR PUMP ASSY ENGRANAJE BOMBA COMPL.	1	1				
34	93505–32038	.BALL .BOLA	4	4				
35	69J–4381C–00	.FILTER 3 .FIELTRO 3	1	1				
36	69J–4389J–00	.O-RING .ANILLO O	2	2				
37	93503–16003	.BALL .ESFERA	2	2				
38	6CJ–4384M–00	.PISTON, SHUTTLE 2 .PISTON 2	1	1				
39	69A–4384F–00	.SEAL, MAIN VALVE .ASIENTO	2	2				
40	99002–03600	.CIRCLIP .PRESILLA REDONDA	2	2				
41	69J–43894–00	.SPRING, SHUTTLE RETURN .RESORTE	2	2				
42	6CJ–43841–00	.PISTON, SHUTTLE .PISTON	1	1				
43	6H1–43883–00	.O-RING .ANILLO EN O 10	1	1				
44	60V–4386A–00	.PIN, ABSORBER VALVE .PASADOR VALVULA ABSORBER	2	2				
45	69J–43853–00	.SPRING, MAIN VALVE .RESORTE	2	2				
46	6CJ–43893–00	.WASHER .RONDANA	2	2				
47	93501–08001	.BALL .BOLA	2	2				
48	93210–08391	.O-RING .ANILLO O	1	1				
49	69J–43851–00	.SEAT, RELIEF VALVE .ASIENTO VALVULA DE DESCARGA	1	1				
50	63P–43844–20	.PIN, VALVE SUPPORT .PASADOR VALVULA SOPORTE	1	1				
51	93210–064A5	.O-RING .ANILLO O	1	1				
52	69J–43855–00	.SPRING, UP RELIEF .RESORTE SEGURIDAD SUPERIOR	1	1				
53	6CJ–43843–00	.SCREW, VALVE LOCK .TORNILLO	2	2				
54	6H1–4384G–11	.SEAL, RELIEF VALVE .ASIENTO	1	1				

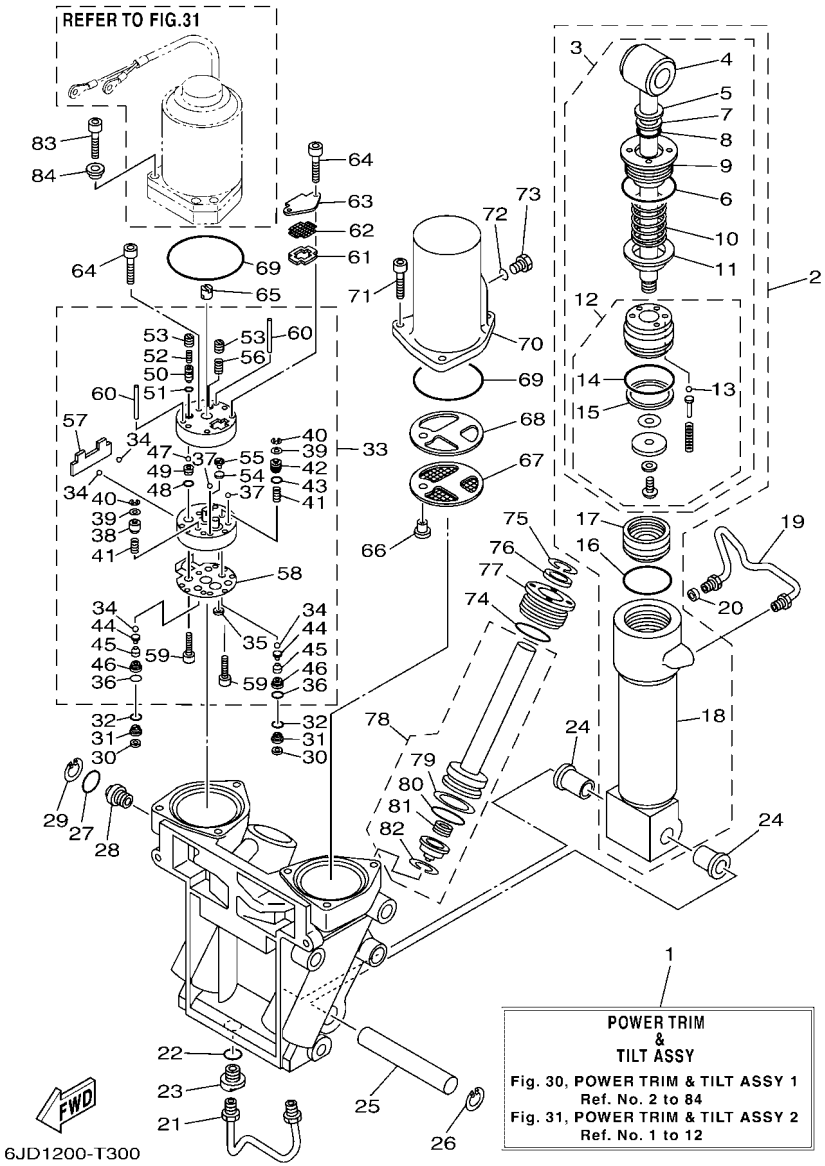

FIG. 30 POWER TRIM & TILT ASSY 1 — COMPONER Y PODER VARILLA 1

REF. NO.	PART NO. CODIGO Nº	DESCRIPTION DESCRIPCION	6JD1	6JE1				REMARKS OBSERVACIONES
55	6H1–43844–10	.PIN, VALVE SUPPORT .PASADOR VALVULA SOPORTE	1	1				
56	6H1–43856–10	.SPRING, DOWN RELIEF .RESORTE SEGURIDAD	1	1				
57	69J–43854–00	.SPRING, MANUAL RELEASE .RESORTE DESCOPLO MANUAL	1	1				
58	69J–4384G–00	.SEAL, RELIEF VALVE .ASIENTO	1	1				
59	91318–05025	.BOLT .TORNILLO	2	2				
60	93604–35236	.PIN, DOWEL .PASADOR DE CLAVIJA	2	2				
61	69J–43871–00	RING, BACK UP ANILLO	1	1				
62	69J–43816–00	FILTER 1 FIELTRO 1	1	1				
63	69J–4381J–00	PLATE PLACA	1	1				
64	91318–05040	BOLT TORNILLO	3	3				
65	69J–43831–00	CONNECTOR, SHAFT CONEXION EJE	1	1				
66	69J–4388H–00	PLUG TAPON	1	1				
67	69J–43817–00	FILTER 2 FIELTRO 2	1	1				
68	69J–4388F–00	SPACER ESPACIADOR	1	1				
69	93210–66001	O-RING ANILLO O	2	2				
70	69J–43828–00	BODY, RESERVOIR CUERPO DEPOSITO	1	1				
71	69J–43888–00	BOLT, SOCKET TORNILLO ENCASTRE	3	3				
72	93210–09165	O-RING ANILLO O	1	1				
73	6H1–43829–00	PLUG, RESERVOIR TAPON DEPOSITO	1	1				
74	61A–43861–00	O-RING ANILLO EN O 1	2	2				
75	6T4–43875–01	RING, SNAP ANILLO	2	2				
76	69J–43822–00	SEAL, TRIM DUST SELLO DE POLVO	2	2				
77	61A–43821–01	SCREW, TRIM CYLINDER END TORNILLO CILINDURO EXTREMO	2	2				
78	69J–43820–01	TRIM PISTON SUB ASSY ELEVADOR PISTON COMPL.	2	2				
79	61A–43874–00	.RING, BACK UP .ANILLO	1	1				
80	61A–43864–00	.O-RING .ANILLO EN O 4	1	1				
81	61A–4384H–10	.SPRING .RESORTE	1	1				

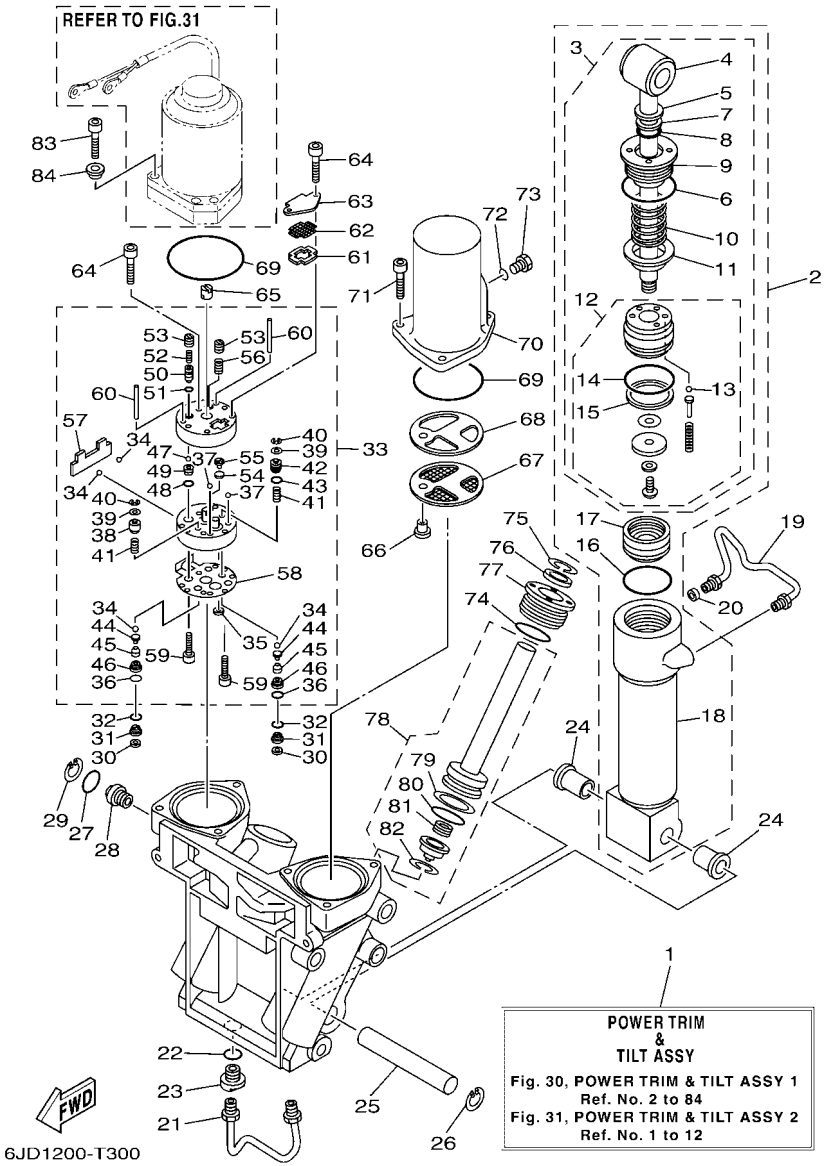

FIG. 30 POWER TRIM & TILT ASSY 1 — COMPONER Y PODER VARILLA 1

REF. NO.	PART NO. CODIGO Nº	DESCRIPTION DESCRIPCION	6JD1	6JE1				REMARKS OBSERVACIONES
82	61A–43875–10	.RING, SNAP .ANILLO	1	1				
83	90110–08M05	BOLT, HEXAGON SOCKET HEAD TORNILLO ALLEN	3	3				
84	6GR–23113–00	COLLAR COLLAR	3	3				

FIG. 31 POWER TRIM & TILT ASSY 2 — COMPONER Y PODER VARILLA 2

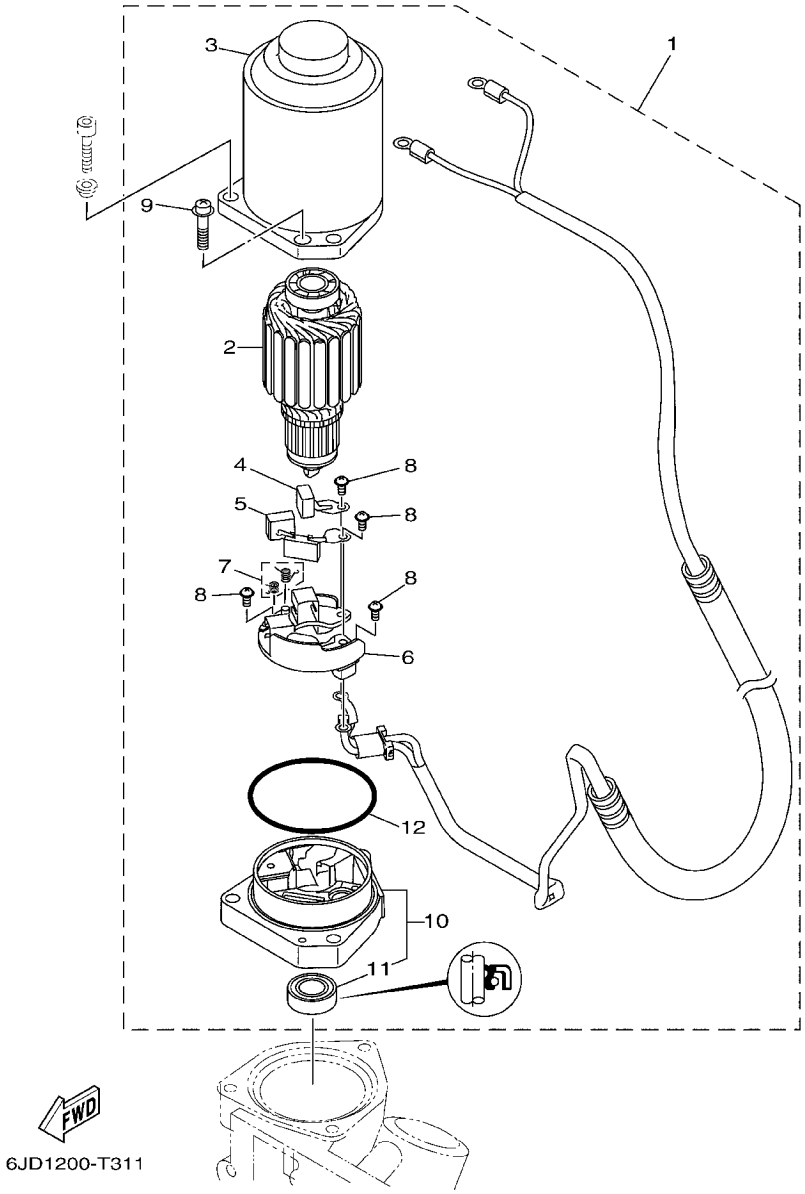

REF. NO.	PART NO. CODIGO Nº	DESCRIPTION DESCRIPCION	6JD1	6JE1				REMARKS OBSERVACIONES
1	69J–43880–10	MOTOR ASSY MOTOR COMPL.	1	1				
2	6GR–43805–00	.ARMATURE ASSY .INDUCIDO COMPL.	1	1				
3	6GR–43804–00	.STATOR ASSY .ESTATOR COMPL	1	1				
4	6GR–43892–00	.BRUSH 2 .ESCOBILLA 2	1	1				
5	6GR–82181–00	.CIRCUIT BREAKER COMP. .RUPTOR DE CIRCUITO COMPL	1	1				
6	6GR–4380F–00	.PLATE, BRUSH HOLDER .PLACA	1	1				
7	6GR–4386K–00	.SPRING, BRUSH .RESORTE, ESCOBILLA	1	1				
8	97602–04310	.SCREW, PAN HEAD WITH WASHER .TORNILLO CON RONDONA	4	4				
9	67C–43879–10	.SCREW, WITH WASHER .TORNILLO CON RONDANA	2	2				
10	69J–43881–10	.FRAME, END .CUADRO EXTERMO	1	1				
11	6GR–43882–00	..OIL SEAL ..SELLO ACEITE	1	1				
12	6GR–43864–00	.O-RING .ANILLO EN O 4	1	1				

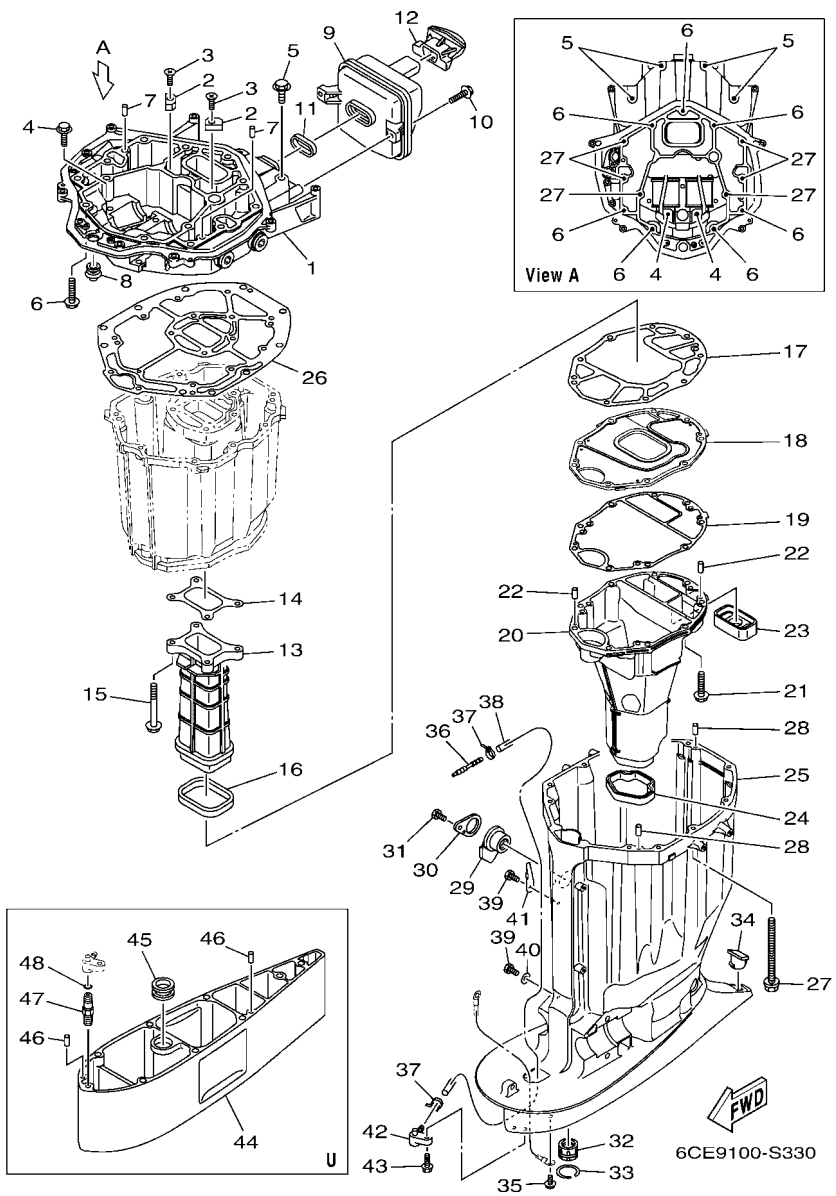

FIG. 32 UPPER CASING — FUNDA SUPERIOR

REF. NO.	PART NO. CODIGO Nº	DESCRIPTION DESCRIPCION	6JD1	6JE1				REMARKS OBSERVACIONES
1	6CE–41137–01	GUIDE, EXHAUST GUIA DE ESCAPE	1	1				
2	63P–11325–11	ANODE ANODO	2	2				
3	90151–06M02	SCREW, COUNTERSUNK TORNILLO EMBUTIDO	2	2				
4	90119–08102	BOLT, WITH WASHER TORNILLO CON ARANDELA	2	2				
5	97E75–10545	BOLT, HEXAGON W/W DEEP RECESS TORNILLO HEXAGONAL CON RONDONA	4	4				
6	97E75–10535	BOLT, HEXAGON W/W DEEP RECESS TORNILLO HEXAGONAL CON RONDONA	7	7				
7	93608–16M16	PIN, DOWEL PASADOR DE CLAVIJA	2	2				
8	6E5–42724–00	GROMMET TAPON	1	1				
9	6CB–14750–A0	SILENCER ASSY SILENCIADOR COMPLETO	1	1				
10	95D95–06020	BOLT, FLANGE DEEP RECESS CERROJO, REBORDE HUECO PROFUND	2	2				
11	6CB–14755–00	GASKET, SILENCER EMPAQUE DE SILENCIADOR	1	1				
12	6CB–42769–01	SEAL, RUBBER SELLO DE GOMA	1	1				
13	6CB–41132–01	MANIFOLD, EXHAUST TUBO MULTIPLE DE ESCAPE	1	1				
14	6CB–41134–00	GASKET, EXHAUST MANIFOLD EMPAQUE	1	1				
15	97E75–08560	BOLT, HEXAGON W/W DEEP RECESS TORNILLO HEXAGONAL CON RONDONA	4	4				
16	6CB–41138–00	SEAL, EXT. 1 SELLO, ESCAPE 1	1	1				
17	6CB–41135–00	GASKET, EXHAUST MANIFOLD EMPAQUE	1	1				
18	6CE–45181–01	PLATE PLACA	1	1				
19	6CE–41136–00	GASKET, EXHAUST MANIFOLD 4 EMPAQUE	1	1				
20	6CE–14711–01	MUFFLER 1 SILENCIADOR 1	1	1				
21	97E75–08535	BOLT, HEXAGON W/W DEEP RECESS TORNILLO HEXAGONAL CON RONDONA	9	9				
22	93606–19M23	PIN, DOWEL PASADOR DE CLAVIJA	2	2				
23	6CE–45127–00	SEAL SELLO DE GOMA	1	1				
24	6CE–45123–00	GASKET, MUFFLER EMPAQUE SILENCIADOR	1	1				
25	6CE–45111–01–8D	CASING, UPPER CAJA SUPERIOR	1	1				
26	6CB–45113–01	GASKET, UPPER CASING EMPAQUE	1	1				
27	90119–10007	BOLT, WITH WASHER TORNILLO CON ARANDELA	6	6				

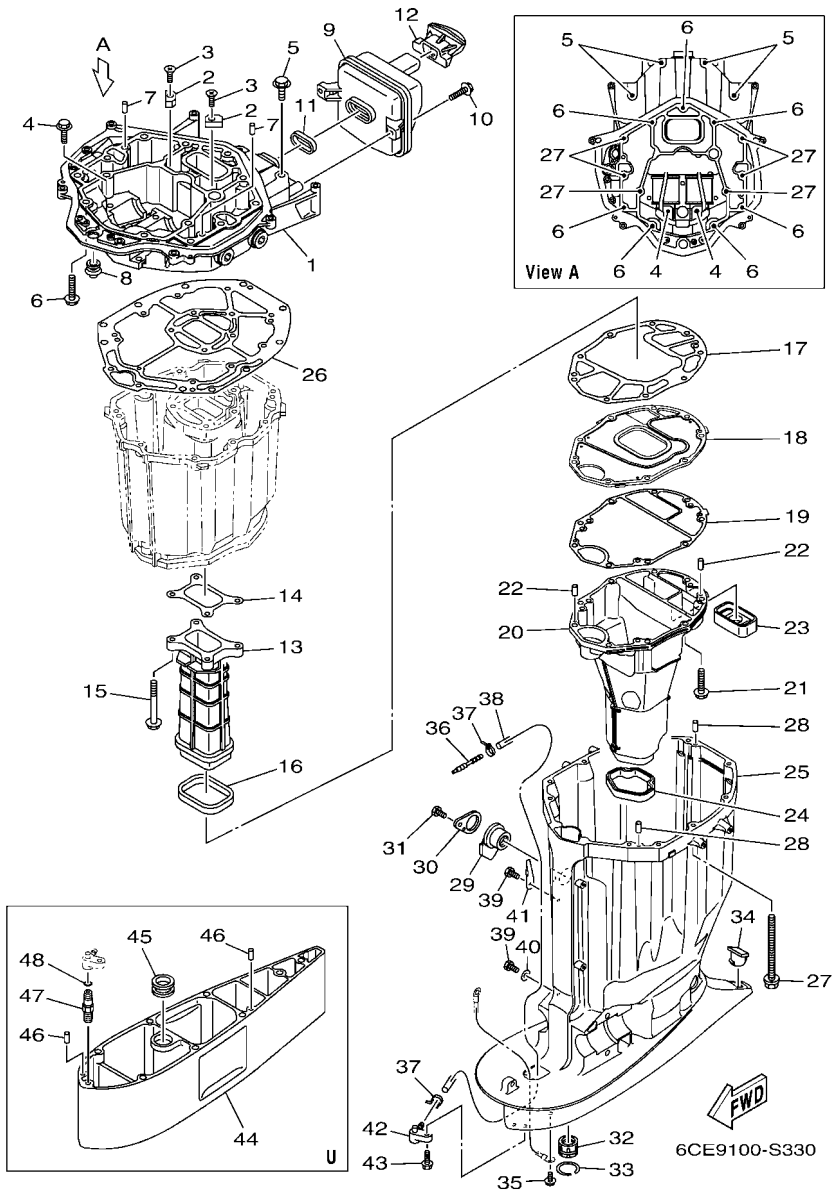

FIG. 32 UPPER CASING — FUNDA SUPERIOR

REF. NO.	PART NO. CODIGO Nº	DESCRIPTION DESCRIPCION	6JD1	6JE1				REMARKS OBSERVACIONES
28	93608–16M16	PIN, DOWEL PASADOR DE CLAVIJA	2	2				
29	6BB–15316–00	DAMPER 1 AMORTIGUADOR 1	1	1				
30	6BB–45152–01	COVER, UPPER CASING 2 CUBIERTA FUNDA SUPERIOR 2	1	1				
31	97D95–06012	BOLT, HEXAGON DEEP RECESS TORNILLO HEXAGONAL	1	1				
32	69J–45318–01	BUSHING, DRIVE SHAFT BUJE, EJE DE MANDO	1	1				
33	93420–36M01	CIRCLIP SEGURO	1	1				
34	61A–45155–00	CAP TAPA	1	1				
35	95D95–06010	BOLT, FLANGE DEEP RECESS CERROJO, REBORDE HUECO PROFUND	1	1				
36	6E5–83558–00	END, NIPPLE EXTREMO DE NIPLE	1	1				
37	90465–11M10	CLAMP BRIDA	2	2				
38	90445–07032	HOSE (L1920) MANGUERA (L1920)	1	1				
39	97D95–06010	BOLT, HEXAGON DEEP RECESS TORNILLO HEXAGONAL	2	2				
40	90201–06M02	WASHER, PLATE ARANDELA PLANA	1	1				
41	90462–10061	CLAMP BRIDA	1	1				
42	63P–45379–00	NIPPLE, HOSE NIPLE DE MANGUERA	1	1				
43	90119–06M18	BOLT, WITH WASHER TORNILLO CON ARANDELA	1	1				
44	6CE–45211–10–8D	EXTENSION EXTENSION	1	1				U(30.3") U(30.3")
45	6AW–44366–00	DAMPER, WATER SEAL 2 GOMA DEL SELLO DE AGUA 2	1	1				U(30.3") U(30.3")
46	93608–16M16	PIN, DOWEL PASADOR DE CLAVIJA	2	2				U(30.3") U(30.3")
47	63P–45378–00	NIPPLE, HOSE NIPLE MANGUERA	1	1				U(30.3") U(30.3")
48	93210–07003	O-RING ANILLO O	1	1				U(30.3") U(30.3")

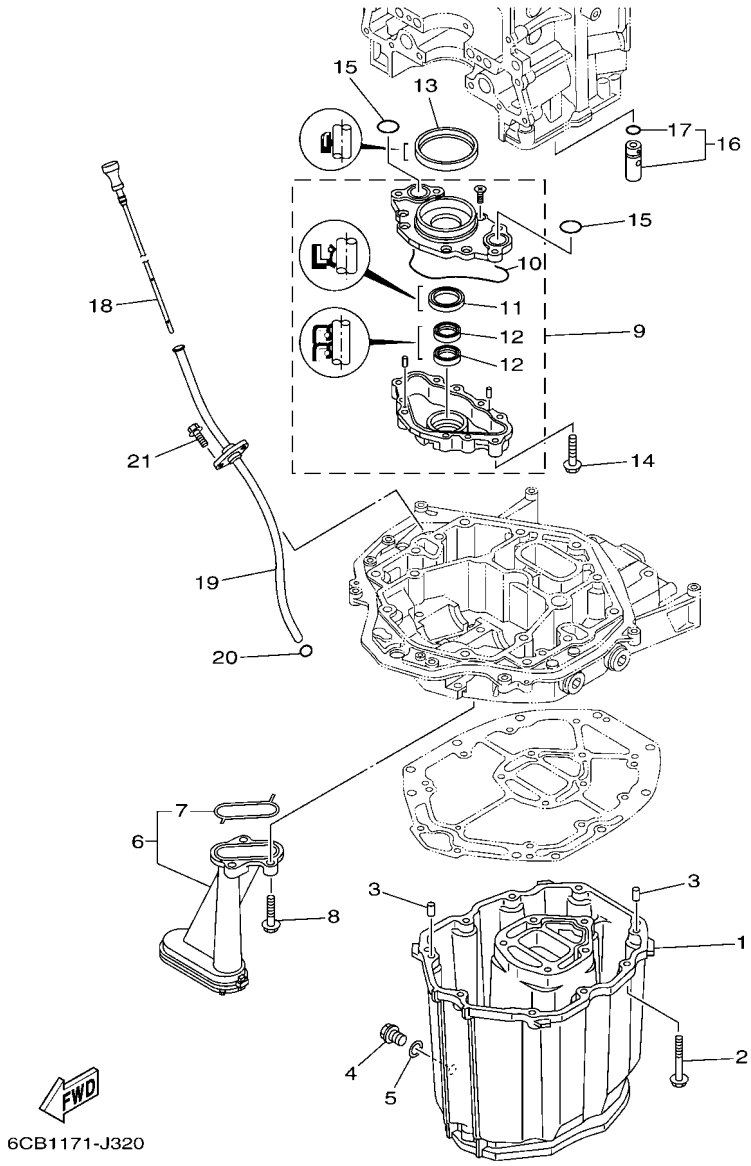

FIG. 33 OIL PAN

OIL PAN

REF. NO.	PART NO. CODIGO Nº	DESCRIPTION DESCRIPCION	6JD1	6JE1				REMARKS OBSERVACIONES
1	6CB–15311–01	OIL PAN BANDEJA DE ACEITE	1	1				
2	97E75–08535	BOLT, HEXAGON W/W DEEP RECESS TORNILLO HEXAGONAL CON RONDONA	10	10				
3	93608–16M16	PIN, DOWEL PASADOR DE CLAVIJA	2	2				
4	90340–14M06	PLUG, STRAIGHT SCREW TORNILLO, DE DRENAJE	1	1				
5	90430–14M09	GASKET JUNTA	1	1				
6	6CB–13411–00	STRAINER, OIL FILTRO DE ACEITE	1	1				
7	6AW–13415–00	.SEAL, OIL STRAINER .SELLO COLADOR ACEITE	1	1				
8	95812–06025	BOLT, FLANGE TORNILLO DE REBORDE	3	3				
9	6CB–13300–00	OIL PUMP ASSY BOMBA DE ACEITE COMPLETA	1	1				
10	6CB–13329–00	.GASKET, PUMP COVER .EMPAQUE TAPA DE BOMBA	1	1				
11	6AW–13119–00	.OIL SEAL .SELLO ACEITE	1	1				
12	69J–13631–00	.OIL SEAL .SELLO ACEITE	2	2				
13	6CB–11355–00	SEAL, CYLINDER 1 RETEN ACEITE CILINDRO 1	1	1				
14	95D75–06040	BOLT, FLANGE DEEP RECESS CERROJO, REBORDE HUECO PROFUND	4	4				
15	93210–26658	O-RING ANILLO O	2	2				
16	6CB–13490–00	RELIEF VALVE ASSY VALVELA DE DESCOMPRESION	1	1				
17	6CB–13473–00	.O-RING .ANILLO O	1	1				
18	6CB–15362–00	PLUG, OIL LEVEL TAPON DEL NIVEL DE ACEITE	1	1				
19	6CB–15377–00	GUIDE, INLET GUIA DE ENTRADA	1	1				
20	93210–19MJ3	O-RING ANILLO O	1	1				
21	95895–06016	BOLT, FLANGE TORNILLO DE REBORDE	2	2				

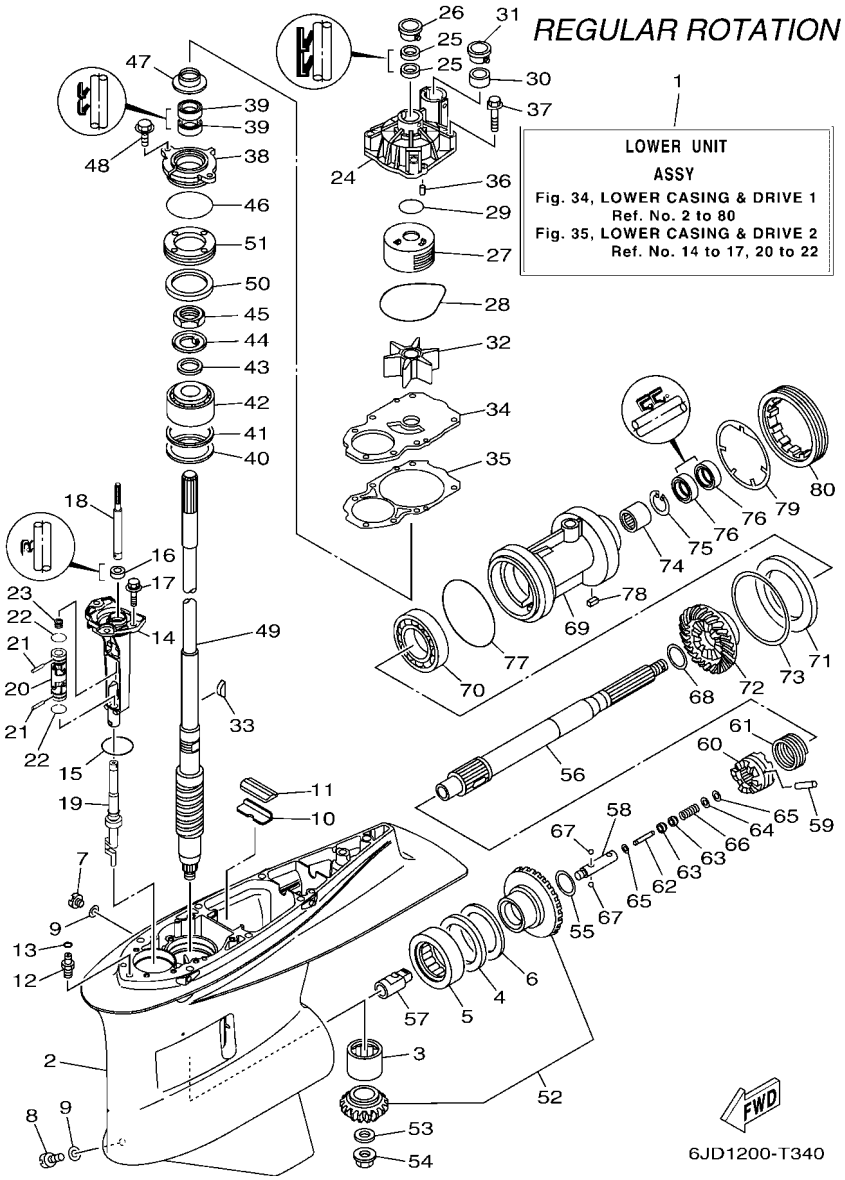

FIG. 34 LOWER CASING & DRIVE 1 — IMPULSOR E INFERIOR 1

REF. NO.	PART NO. CODIGO Nº	DESCRIPTION DESCRIPCION	6JD1	6JE1				REMARKS OBSERVACIONES
1	6JD–45300–00–8D	LOWER UNIT ASSY CONJUNTO UNIDAD INFERIOR	1					X(25.3"),RH X(25.3"),RH
	6JD–45300–10–8D	LOWER UNIT ASSY CONJUNTO UNIDAD INFERIOR	1					U(30.3"),RH U(30.3"),RH
2	6JD–45301–00–8D	CASING, LOWER FUNDA INFERIOR COMPLETA	1					
3	93311–93590	BEARING COJINETE DE RODILLOS	1					
4	93340–67011	BEARING COJINETES CON RODAMIENTOS	1					
5	93390–00031	BEARING COJINETE DE RODILLOS	1					
6	6AW–45567–00	SHIM (T:2.00MM) LAINA (T:2.00MM)	1					UR UR
	6AW–45567–10	SHIM (T:2.03MM) LAINA (T:2.03MM)	1					UR UR
	6AW–45567–20	SHIM (T:2.06MM) LAINA (T:2.06MM)	1					UR UR
	6AW–45567–30	SHIM (T:2.09MM) LAINA (T:2.09MM)	1					UR UR
	6AW–45567–40	SHIM (T:2.12MM) LAINA (T:2.12MM)	1					UR UR
	6AW–45567–50	SHIM (T:2.15MM) LAINA (T:2.15MM)	1					UR UR
7	90340–08002	PLUG, STRAIGHT SCREW TORNILLO, DE DRENAJE	1					
8	688–45341–10	PLUG, DRAIN TAPON, DREN	1					
9	90430–08003	GASKET JUNTA	2					
10	61A–45376–00	GUIDE, SEAL DAMPER GUIA DE SELLO GOMA	1					
11	6JD–45375–00	DAMPER, SEAL GOMA DE SELLO	1					
12	63P–45378–00	NIPPLE, HOSE NIPLE MANGUERA	1					
13	93210–07003	O-RING ANILLO O	1					
14	6JD–45321–00	PLATE PLACA	1					
15	93210–58144	O-RING ANILLO O	1					
16	93101–12M70	OIL SEAL SELLO ACEITE	1					
17	90119–08M32	BOLT, WITH WASHER TORNILLO CON ARANDELA	3					
18	6JD–44153–00	ROD, SHIFT 3 VARILLA DE CAMBIO 3	1					X(25.3") X(25.3")
	6JD–44153–10	ROD, SHIFT 3 VARILLA DE CAMBIO 3	1					U(30.3") U(30.3")
19	6JD–44150–00	SHIFT CAM ASSY CONJUNTO EJE LEVA COMPL.	1					
20	6JD–45860–00	UNIVERSAL JOINT ASSY JUNTA UNIVERSAL COMPL	1					

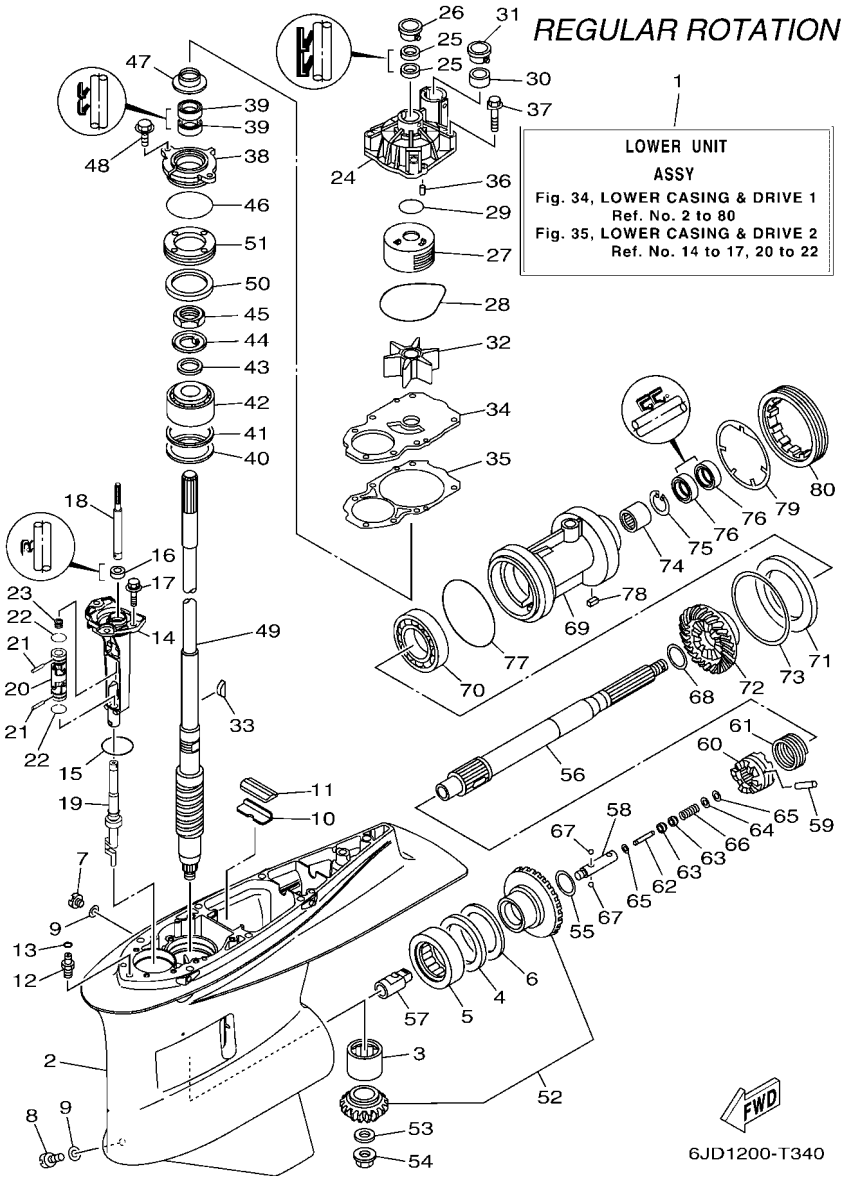

FIG. 34 LOWER CASING & DRIVE 1 — IMPULSOR E INFERIOR 1

REF. NO.	PART NO. CODIGO Nº	DESCRIPTION DESCRIPCION	6JD1	6JE1				REMARKS OBSERVACIONES
21	6JD–45524–00	PIN PASADOR	2					
22	6JD–45319–00	CLIP PRESILLA	2					
23	90501–127J4	SPRING, COMPRESSION RESORTE DE COMPRESION	1					
24	6CE–44311–01	HOUSING, WATER PUMP CAJA BOMBA DE AGUA	1					
25	93104–22M07	OIL SEAL SELLO ACEITE	2					
26	6AW–44312–00	COVER, WATER PUMP HOUSING CUBIERTA CAJA BOMBA DE AGUA	1					
27	6JD–44322–00	INSERT, CARTRIDGE CARTUCHO	1					
28	93210–94003	O-RING ANILLO O	1					
29	93210–37160	O-RING ANILLO O	1					
30	6AW–44365–00	DAMPER, WATER SEAL 1 HULE DE SELLO DE AGUA 1	1					
31	6AW–44312–00	COVER, WATER PUMP HOUSING CUBIERTA CAJA BOMBA DE AGUA	1					
32	6CE–44352–00	IMPELLER IMPULSOR	1					
33	90280–04002	KEY, WOODRUFF CUNA WOODRUFF	1					
34	6JD–44323–00	OUTER PLATE, CARTRIDGE PLACA EXTERIOR DEL CARTUCHO	1					
35	6JD–44315–00	GASKET, WATER PUMP EMPAQUE	1					
36	93606–12019	PIN, DOWEL PASADOR DE CLAVIJA	2					
37	90119–08M14	BOLT, WITH WASHER TORNILLO CON ARANDELA	4					
38	6AW–45335–00–CA	HOUSING, OIL SEAL CAJA DEL SELLO DE ACEITE	1					
39	93101–28019	OIL SEAL SELLO ACEITE	2					
40	90201–68008	WASHER, PLATE ARANDELA PLANA	1					
41	6AW–45587–00	SHIM (T:0.10MM) LAINA (T:0.10MM)	1					UR UR
	6AW–45587–10	SHIM (T:0.12MM) LAINA (T:0.12MM)	1					UR UR
	6AW–45587–20	SHIM (T:0.15MM) LAINA (T:0.15MM)	1					UR UR
	6AW–45587–30	SHIM (T:0.18MM) LAINA (T:0.18MM)	1					UR UR
	6AW–45587–40	SHIM (T:0.30MM) LAINA (T:0.30MM)	1					UR UR
	6AW–45587–50	SHIM (T:0.40MM) LAINA (T:0.40MM)	1					UR UR
	6AW–45587–60	SHIM (T:0.50MM) LAINA (T:0.50MM)	1					UR UR

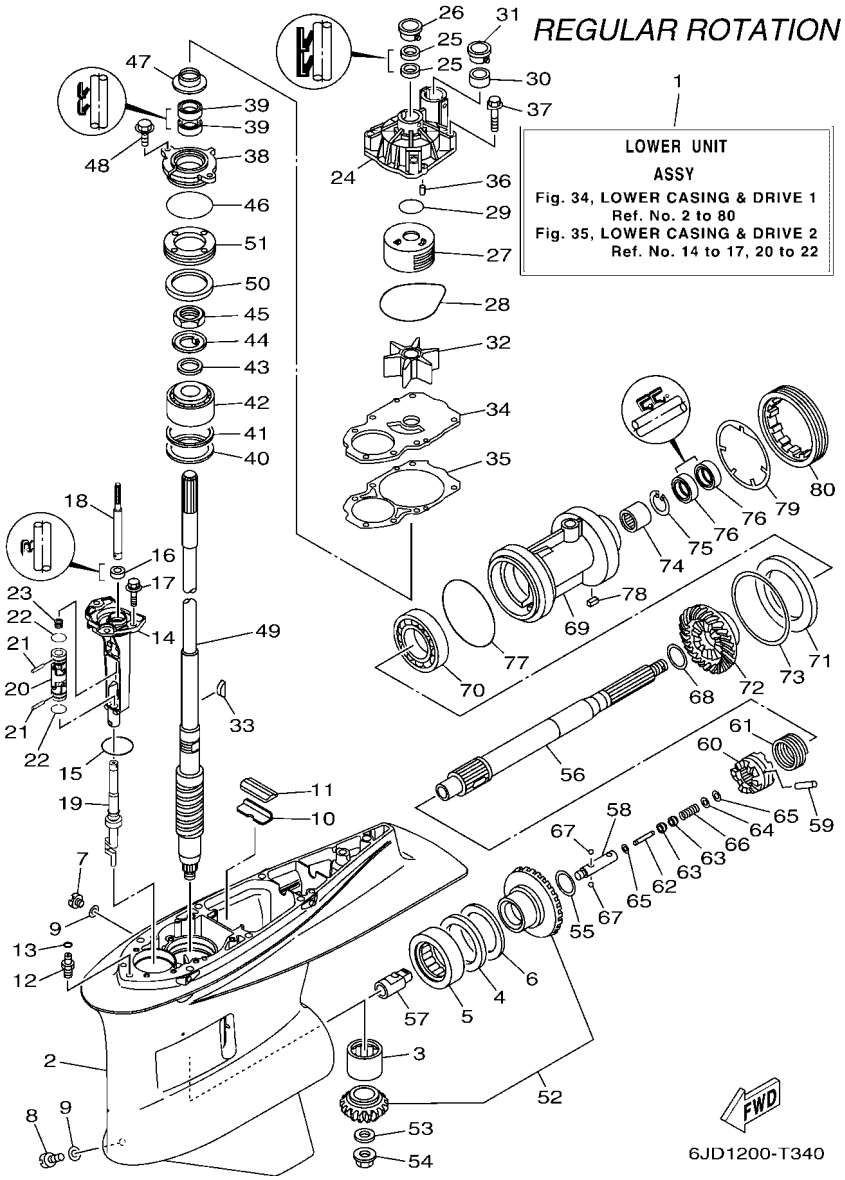

FIG. 34 LOWER CASING & DRIVE 1 — IMPULSOR E INFERIOR 1

REF. NO.	PART NO. CODIGO Nº	DESCRIPTION DESCRIPCION	6JD1	6JE1				REMARKS OBSERVACIONES
42	93399–99962	BEARING COJINETE	1					
43	90201–301U7	WASHER, PLATE ARANDELA PLANA	1					
44	90214–30003	WASHER, CLAW ARANDELA DE POSICION	1					
45	90170–30M18	NUT TUERCA	1					
46	93210–69MG6	O-RING ANILLO O	1					
47	6AW–45344–00	COVER, OIL SEAL CUBIERTA SELLO ACEITE	1					
48	97E95–08520	BOLT, HEXAGON W/W DEEP RECESS TORNILLO HEXAGONAL CON RONDONA	2					
49	6JD–45501–00	DRIVE SHAFT COMP. EJE DE MANDO COMPL.	1					X(25.3") X(25.3")
	6JD–45501–10	DRIVE SHAFT COMP. EJE DE MANDO COMPL.	1					U(30.3") U(30.3")
50	6T5–45539–00	SPACER 2 ESPACIADOR 2	1					
51	6AW–45244–00	NUT TUERCA	1					
52	6JD–45550–00	GEAR SET JUEGO DE ENGRANAJE	1					
53	90201–18023	WASHER, PLATE ARANDELA PLANA	1					
54	90179–18009	NUT TUERCA	1					
55	90201–35015	WASHER, PLATE ARANDELA PLANA	1					
56	6AW–45611–00	SHAFT, PROPELLER EJE PROPUSOR	1					
57	6JD–45641–00	SHIFTER CAMBIO	1					
58	61A–45634–01	SLIDE, SHIFT DESLIZADOR, CAMBIO	1					
59	6AW–45632–00	PIN, CROSS PASADOR TRANSVERSAL	1					
60	6AW–45631–00	CLUTCH, DOG EMBRAGUE DE GARRA	1					
61	6AW–45633–00	RING, CROSS PIN ANILLO DE PASADOR	1					
62	6H1–45668–00	SHAFT, FREE 1 EJE 1	1					
63	61A–45635–00	PLUNGER, SHIFT EMBOLO DE CAMBIO	2					
64	90201–02M00	WASHER, PLATE ARANDELA PLANA	1					
65	90183–02M03	NUT, SPRING TUERCA DE RESORTE	2					
66	90501–10M77	SPRING, COMPRESSION RESORTE DE COMPRESION	1					
67	93501–04011	BALL BOLA	2					

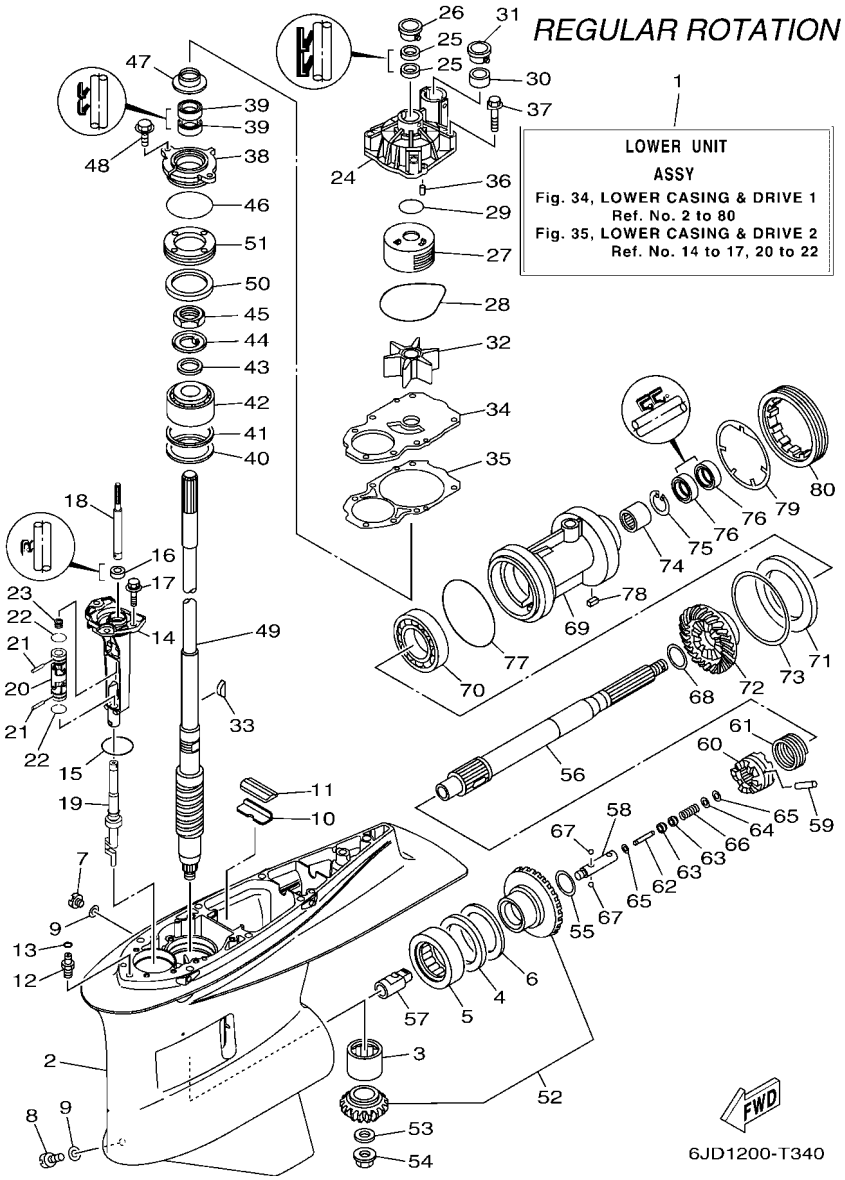

FIG. 34 LOWER CASING & DRIVE 1 — IMPULSOR E INFERIOR 1

REF. NO.	PART NO. CODIGO Nº	DESCRIPTION DESCRIPCION	6JD1	6JE1				REMARKS OBSERVACIONES
68	6AW–45612–00	WASHER, THRUST ARANDELA DE EMPUJE AXIAL	1					
69	6AW–45332–00	HOUSING, BEARING CAJA BALERO 2	1					
70	93306–21101	BEARING COJINETE	1					
71	6AW–45576–00	WASHER, THRUST 2 ARANDELA DE EMPUJE AXIAL 2	1					
72	6AW–45571–00	GEAR 2 (26T) ENGRANAJE 2 (26T)	1					
73	6AW–45577–00	SHIM (T:0.10MM) LAINA (T:0.10MM)	1					UR UR
	6AW–45577–10	SHIM (T:0.12MM) LAINA (T:0.12MM)	1					UR UR
	6AW–45577–20	SHIM (T:0.15MM) LAINA (T:0.15MM)	1					UR UR
	6AW–45577–30	SHIM (T:0.18MM) LAINA (T:0.18MM)	1					UR UR
	6AW–45577–40	SHIM (T:0.30MM) LAINA (T:0.30MM)	1					UR UR
	6AW–45577–50	SHIM (T:0.40MM) LAINA (T:0.40MM)	1					UR UR
	6AW–45577–60	SHIM (T:0.50MM) LAINA (T:0.50MM)	1					UR UR
74	93311–63591	BEARING COJINETE DE RODILLOS	1					
75	99009–47500	CIRCLIP PRESILLA REDONDA	1					
76	93101–35019	OIL SEAL SELLO ACEITE	2					
77	93211–10232	O-RING ANILLO O	1					
78	90282–05008	KEY, STRAIGHT CHAVETA, RECTA	1					
79	6AW–45383–00	WASHER, CLAW ARANDELA DE UNA	1					
80	6AW–45384–00	NUT TUERCA	1					

FIG. 35 LOWER CASING & DRIVE 2 — IMPULSOR E INFERIOR 2

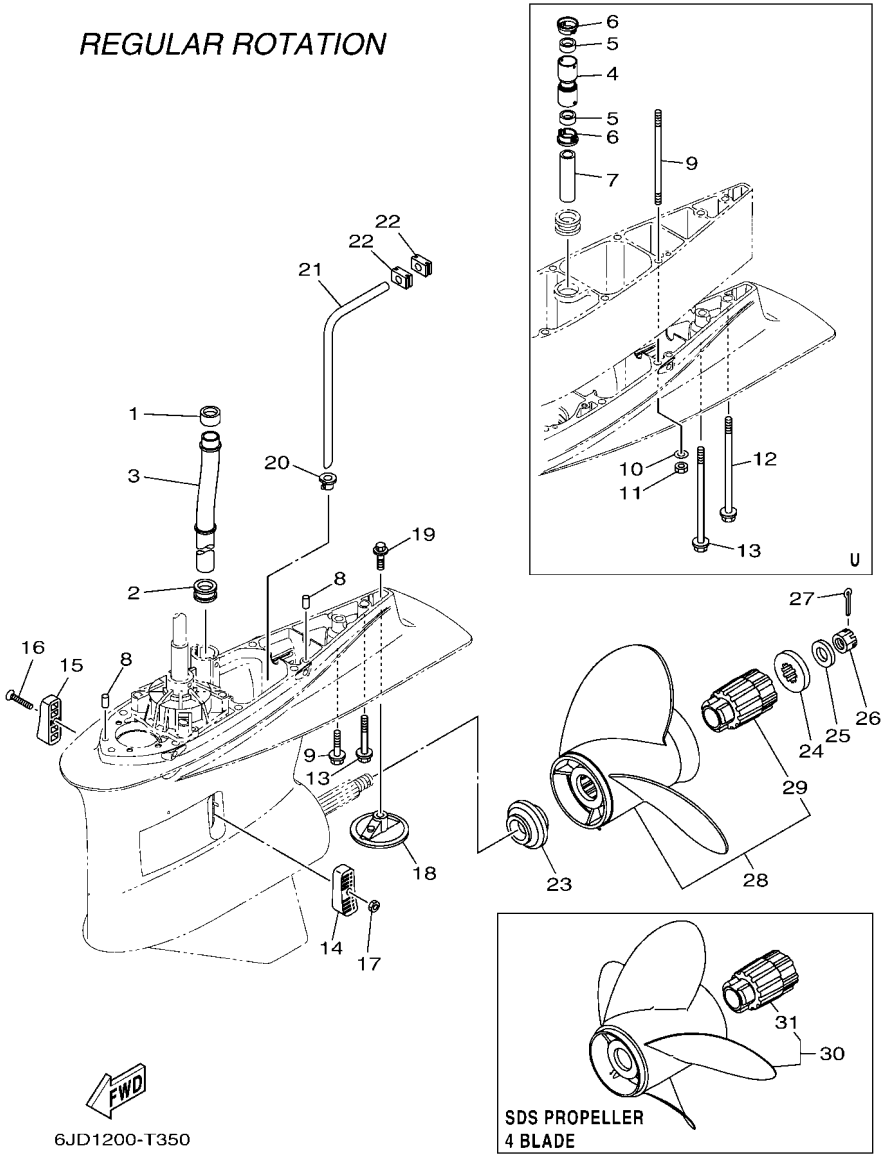

REF. NO.	PART NO. CODIGO Nº	DESCRIPTION DESCRIPCION	6JD1	6JE1				REMARKS OBSERVACIONES
1	6AW–44365–00	DAMPER, WATER SEAL 1 HULE DE SELLO DE AGUA 1	1					
2	6AW–44366–00	DAMPER, WATER SEAL 2 GOMA DEL SELLO DE AGUA 2	1					
3	6CE–44361–00	TUBE, WATER 1 TUBO DE AGUA 1	1					
4	6CE–44362–00	TUBE, WATER 2 TUBO DE AGUA 2	1					U(30.3") U(30.3")
5	6AW–44365–00	DAMPER, WATER SEAL 1 HULE DE SELLO DE AGUA 1	2					U(30.3") U(30.3")
6	6AW–44312–00	COVER, WATER PUMP HOUSING CUBIERTA CAJA BOMBA DE AGUA	2					U(30.3") U(30.3")
7	6AW–44363–00	TUBE, WATER 3 TUBO DE AGUA 3	1					U(30.3") U(30.3")
8	93608–16M16	PIN, DOWEL PASADOR DE CLAVIJA	2					
9	90119–10024	BOLT, WITH WASHER TORNILLO CON ARANDELA	7					X(25.3") X(25.3")
	90116–10067	BOLT, STUD ESPARRAGO	6					U(30.3") U(30.3")
10	92995–10600	WASHER ARANDELA	6					U(30.3") U(30.3")
11	95380–10600	NUT TUERCA	6					U(30.3") U(30.3")
12	90119–10008	BOLT, WITH WASHER TORNILLO CON ARANDELA	1					U(30.3") U(30.3")
13	97E75–10570	BOLT, HEXAGON W/W DEEP RECESS TORNILLO HEXAGONAL CON RONDONA	1					X(25.3") X(25.3")
	90119–10009	BOLT, WITH WASHER TORNILLO CON ARANDELA	1					U(30.3") U(30.3")
14	6AW–45214–00	COVER, WATER INLET 1 CUBIERTA ENTRADA AGUA 1	1					
15	6AW–45215–00	COVER, WATER INLET 2 CUBIERTA ENTRADA AGUA 2	1					
16	90152–05003	SCREW, COUNTERSUNK TORNILLO EMBUTIDO	1					
17	90185–05002	NUT, NYLON TUERCA AUTOBLOCANTE	1					
18	6CE–45373–00	ANODE ANODO	1					
19	90105–10M00	BOLT, FLANGE TORNILLO	1					
20	6AW–44367–00	DAMPER, WATER SEAL 3 GOMA DEL SELLO DE AGUA 3	1					
21	6JD–44362–00	TUBE, WATER 2 TUBO DE AGUA 2	1					
22	6AW–44376–00	GROMMET, WATER TUBE 2 TAPON, TUBO DE AGUA 2	2					
23	6AW–45987–00	SPACER 1 ESPACIADOR 1	1					
24	6AW–45997–00	SPACER 2 ESPACIADOR 2	1					
25	90201–19M01	WASHER, PLATE ARANDELA PLANA	1					

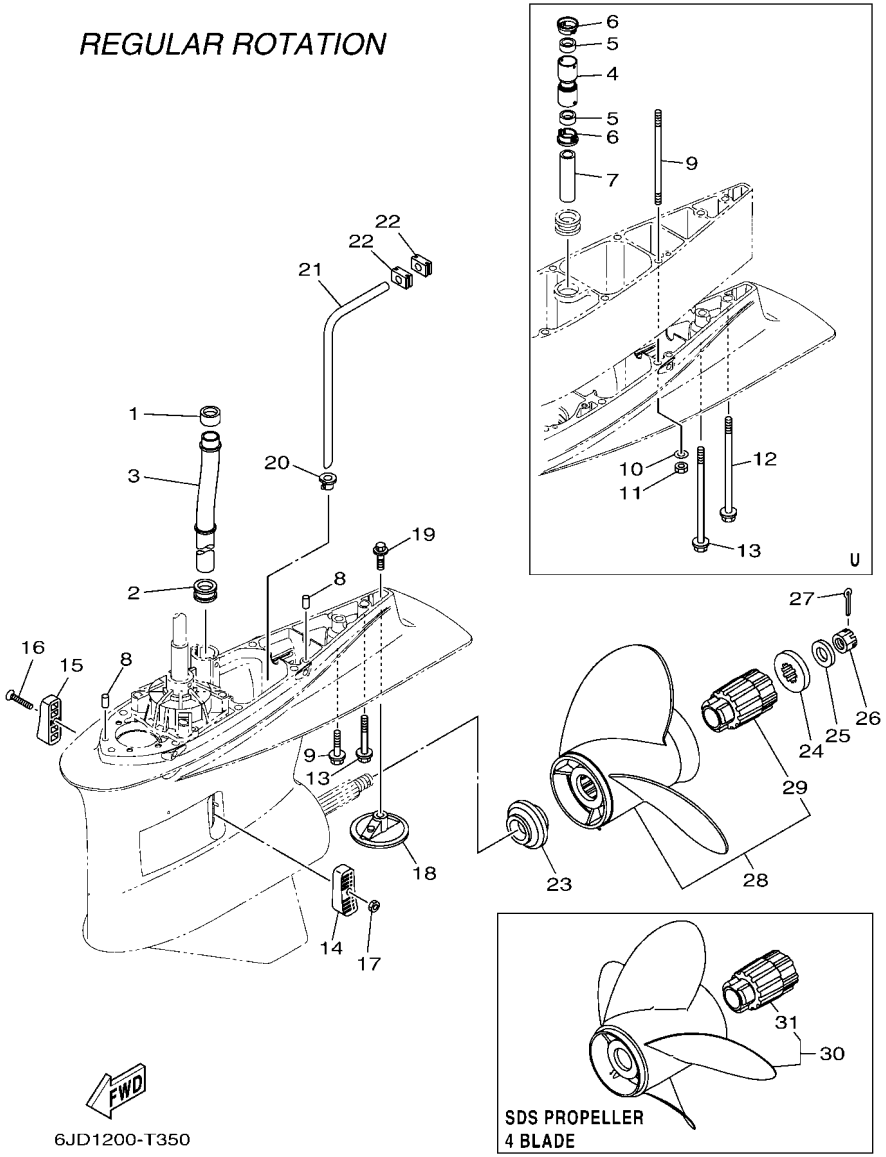

FIG. 35 LOWER CASING & DRIVE 2 — IMPULSOR E INFERIOR 2

REF. NO.	PART NO. CODIGO Nº	DESCRIPTION DESCRIPCION	6JD1	6JE1				REMARKS OBSERVACIONES
26	90171–18M04	NUT, CASTLE TUERCA ENTALLADA	1					
27	91490–40030	PIN. COTTER CHAVETA	1					
28	6AW–45930–20	PROPELLER (3X16-1/4"X13"-X) PROPELA (3X16-1/4"X13"-X)	1					UR SDS 3 BLADE UR SDS 3 BLADE
	6AW–45970–20	PROPELLER (3X16-1/4"X15"-X) PROPELA (3X16-1/4"X15"-X)	1					UR SDS 3 BLADE UR SDS 3 BLADE
	6AW–45972–20	PROPELLER (3X16-1/4"X17"-X) PROPELA (3X16-1/4"X17"-X)	1					UR SDS 3 BLADE UR SDS 3 BLADE
	6AW–45974–20	PROPELLER (3X15-1/2"X19"-X) PROPELA (3X15-1/2"X19"-X)	1					UR SDS 3 BLADE UR SDS 3 BLADE
	6AW–45976–20	PROPELLER (3X15-1/4"X21"-X) PROPELA (3X15-1/4"X21"-X)	1					UR SDS 3 BLADE UR SDS 3 BLADE
	6AW–45978–20	PROPELLER (3X15-1/4"X23"-X) PROPELA (3X15-1/4"X23"-X)	1					UR SDS 3 BLADE UR SDS 3 BLADE
29	6AW–45C81–10	.DAMPER RUBBER, PROPELLER 1 .AMORTIGUADOR PROPELA 1	1					
30	6AW–45B70–20	PROPELLER (4X16-1/8"X15"-X) PROPELA (4X16-1/8"X15"-X)	1					UR SDS 4 BLADE UR SDS 4 BLADE
	6AW–45B72–20	PROPELLER (4X16-1/8"X17"-X) PROPELA (4X16-1/8"X17"-X)	1					UR SDS 4 BLADE UR SDS 4 BLADE
	6AW–45B76–20	PROPELLER (4X15-3/8"X22"-X) PROPELA (4X15-3/8"X22"-X)	1					UR SDS 4 BLADE UR SDS 4 BLADE
	6AW–45B74–20	PROPELLER (4X15-3/8"X24"-X) PROPELA (4X15-3/8"X24"-X)	1					UR SDS 4 BLADE UR SDS 4 BLADE
31	6AW–45C81–10	.DAMPER RUBBER, PROPELLER 1 .AMORTIGUADOR PROPELA 1	1					

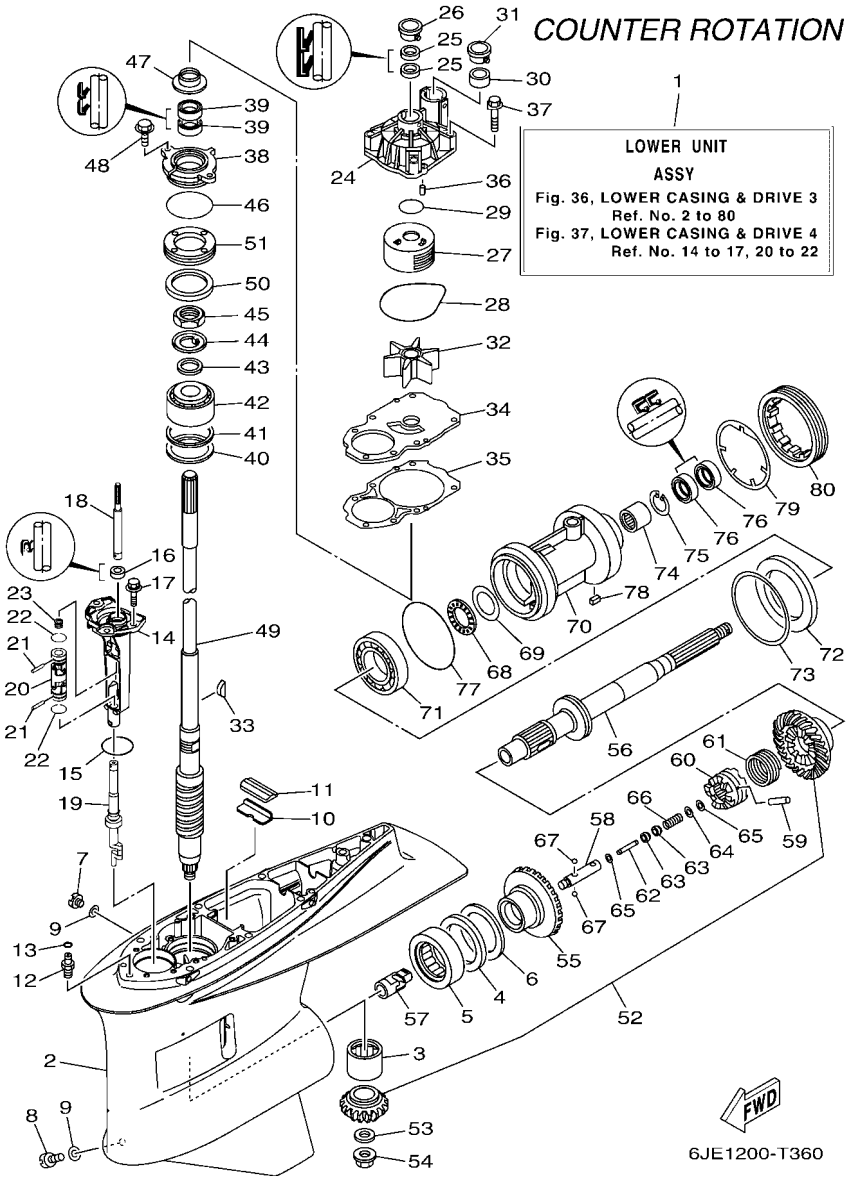

FIG. 36 LOWER CASING & DRIVE 3 — IMPULSOR E INFERIOR 3

REF. NO.	PART NO. CODIGO Nº	DESCRIPTION DESCRIPCION	6JD1	6JE1				REMARKS OBSERVACIONES
1	6JE–45300–00–8D	LOWER UNIT ASSY CONJUNTO UNIDAD INFERIOR		1				X(25.3"),LH X(25.3"),LH
	6JE–45300–10–8D	LOWER UNIT ASSY CONJUNTO UNIDAD INFERIOR		1				U(30.3"),LH U(30.3"),LH
2	6JD–45301–00–8D	CASING, LOWER FUNDA INFERIOR COMPLETA		1				
3	93311–93590	BEARING COJINETE DE RODILLOS		1				
4	93340–67011	BEARING COJINETES CON RODAMIENTOS		1				
5	93390–00031	BEARING COJINETE DE RODILLOS		1				
6	6AW–45567–00	SHIM (T:2.00MM) LAINA (T:2.00MM)		1				UR UR
	6AW–45567–10	SHIM (T:2.03MM) LAINA (T:2.03MM)		1				UR UR
	6AW–45567–20	SHIM (T:2.06MM) LAINA (T:2.06MM)		1				UR UR
	6AW–45567–30	SHIM (T:2.09MM) LAINA (T:2.09MM)		1				UR UR
	6AW–45567–40	SHIM (T:2.12MM) LAINA (T:2.12MM)		1				UR UR
	6AW–45567–50	SHIM (T:2.15MM) LAINA (T:2.15MM)		1				UR UR
7	90340–08002	PLUG, STRAIGHT SCREW TORNILLO, DE DRENAJE		1				
8	688–45341–10	PLUG, DRAIN TAPON, DREN		1				
9	90430–08003	GASKET JUNTA		2				
10	61A–45376–00	GUIDE, SEAL DAMPER GUIA DE SELLO GOMA		1				
11	6JD–45375–00	DAMPER, SEAL GOMA DE SELLO		1				
12	63P–45378–00	NIPPLE, HOSE NIPLE MANGUERA		1				
13	93210–07003	O-RING ANILLO O		1				
14	6JD–45321–00	PLATE PLACA		1				
15	93210–58144	O-RING ANILLO O		1				
16	93101–12M70	OIL SEAL SELLO ACEITE		1				
17	90119–08M32	BOLT, WITH WASHER TORNILLO CON ARANDELA		3				
18	6JD–44153–00	ROD, SHIFT 3 VARILLA DE CAMBIO 3		1				X(25.3") X(25.3")
	6JD–44153–10	ROD, SHIFT 3 VARILLA DE CAMBIO 3		1				U(30.3") U(30.3")
19	6JD–44150–00	SHIFT CAM ASSY CONJUNTO EJE LEVA COMPL.		1				
20	6JD–45860–00	UNIVERSAL JOINT ASSY JUNTA UNIVERSAL COMPL		1				

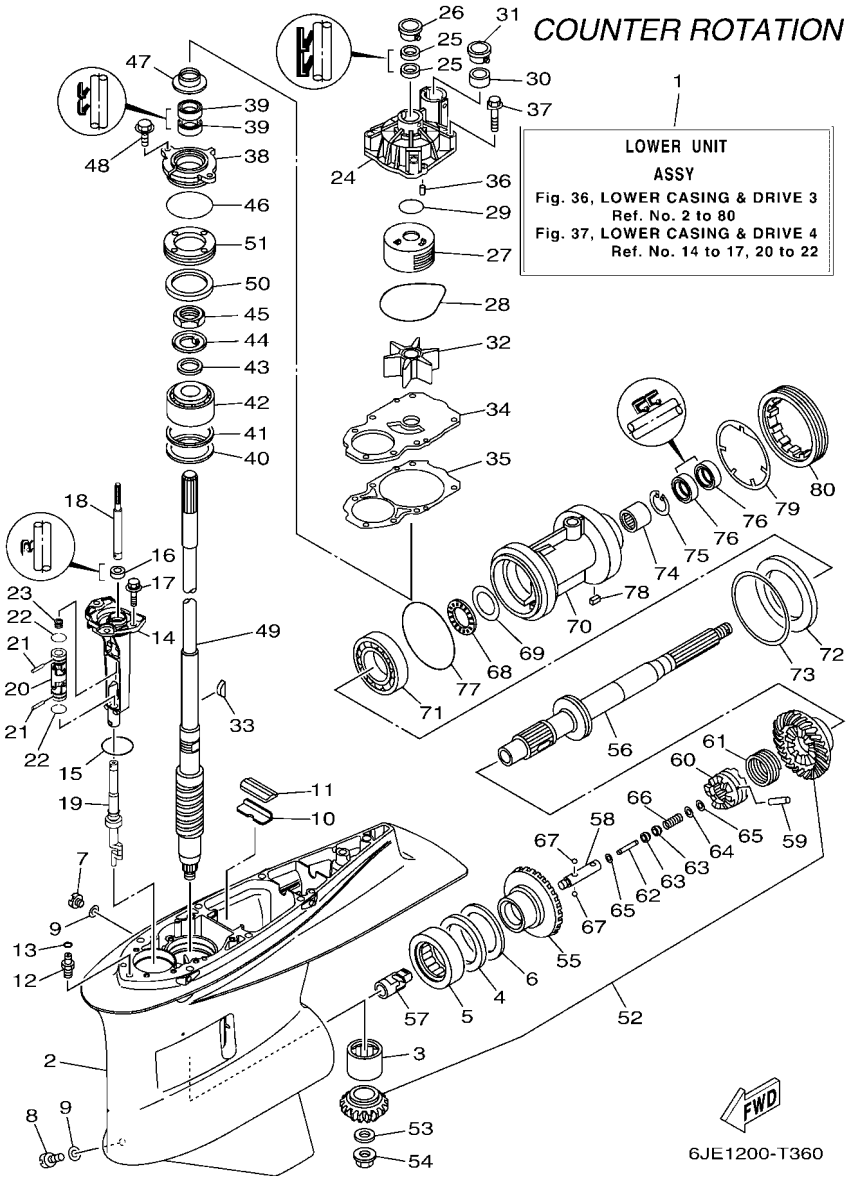

FIG. 36 LOWER CASING & DRIVE 3 — IMPULSOR E INFERIOR 3

REF. NO.	PART NO. CODIGO Nº	DESCRIPTION DESCRIPCION	6JD1	6JE1				REMARKS OBSERVACIONES
21	6JD–45524–00	PIN PASADOR		2				
22	6JD–45319–00	CLIP PRESILLA		2				
23	90501–127J4	SPRING, COMPRESSION RESORTE DE COMPRESION		1				
24	6CE–44311–01	HOUSING, WATER PUMP CAJA BOMBA DE AGUA		1				
25	93104–22M07	OIL SEAL SELLO ACEITE		2				
26	6AW–44312–00	COVER, WATER PUMP HOUSING CUBIERTA CAJA BOMBA DE AGUA		1				
27	6JD–44322–00	INSERT, CARTRIDGE CARTUCHO		1				
28	93210–94003	O-RING ANILLO O		1				
29	93210–37160	O-RING ANILLO O		1				
30	6AW–44365–00	DAMPER, WATER SEAL 1 HULE DE SELLO DE AGUA 1		1				
31	6AW–44312–00	COVER, WATER PUMP HOUSING CUBIERTA CAJA BOMBA DE AGUA		1				
32	6CE–44352–00	IMPELLER IMPULSOR		1				
33	90280–04002	KEY, WOODRUFF CUNA WOODRUFF		1				
34	6JD–44323–00	OUTER PLATE, CARTRIDGE PLACA EXTERIOR DEL CARTUCHO		1				
35	6JD–44315–00	GASKET, WATER PUMP EMPAQUE		1				
36	93606–12019	PIN, DOWEL PASADOR DE CLAVIJA		2				
37	90119–08M14	BOLT, WITH WASHER TORNILLO CON ARANDELA		4				
38	6AW–45335–00–CA	HOUSING, OIL SEAL CAJA DEL SELLO DE ACEITE		1				
39	93101–28019	OIL SEAL SELLO ACEITE		2				
40	90201–68008	WASHER, PLATE ARANDELA PLANA		1				
41	6AW–45587–00	SHIM (T:0.10MM) LAINA (T:0.10MM)		1				UR UR
	6AW–45587–10	SHIM (T:0.12MM) LAINA (T:0.12MM)		1				UR UR
	6AW–45587–20	SHIM (T:0.15MM) LAINA (T:0.15MM)		1				UR UR
	6AW–45587–30	SHIM (T:0.18MM) LAINA (T:0.18MM)		1				UR UR
	6AW–45587–40	SHIM (T:0.30MM) LAINA (T:0.30MM)		1				UR UR
	6AW–45587–50	SHIM (T:0.40MM) LAINA (T:0.40MM)		1				UR UR
	6AW–45587–60	SHIM (T:0.50MM) LAINA (T:0.50MM)		1				UR UR

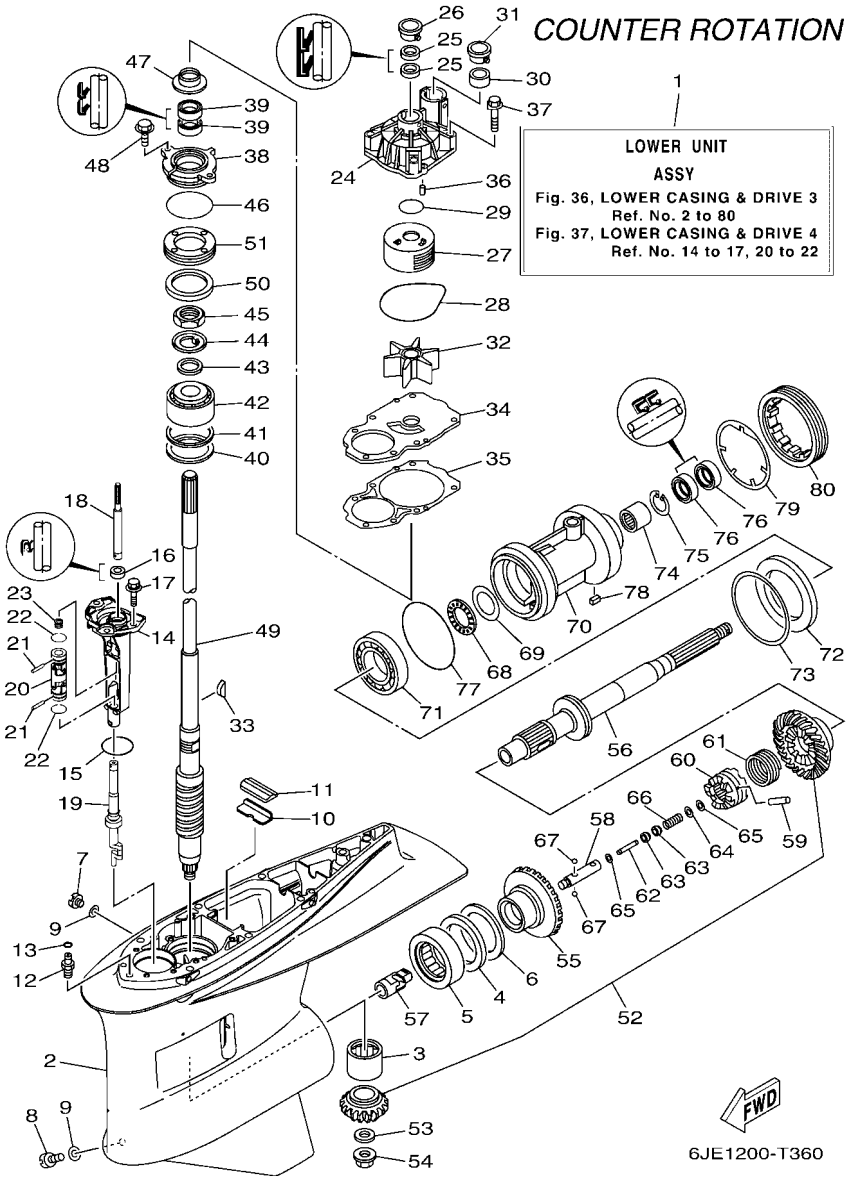

FIG. 36 LOWER CASING & DRIVE 3 — IMPULSOR E INFERIOR 3

REF. NO.	PART NO. CODIGO Nº	DESCRIPTION DESCRIPCION	6JD1	6JE1				REMARKS OBSERVACIONES
42	93399–99962	BEARING COJINETE		1				
43	90201–301U7	WASHER, PLATE ARANDELA PLANA		1				
44	90214–30003	WASHER, CLAW ARANDELA DE POSICION		1				
45	90170–30M18	NUT TUERCA		1				
46	93210–69MG6	O-RING ANILLO O		1				
47	6AW–45344–00	COVER, OIL SEAL CUBIERTA SELLO ACEITE		1				
48	97E95–08520	BOLT, HEXAGON W/W DEEP RECESS TORNILLO HEXAGONAL CON RONDONA		2				
49	6JD–45501–00	DRIVE SHAFT COMP. EJE DE MANDO COMPL.		1				X(25.3") X(25.3")
	6JD–45501–10	DRIVE SHAFT COMP. EJE DE MANDO COMPL.		1				U(30.3") U(30.3")
50	6T5–45539–00	SPACER 2 ESPACIADOR 2		1				
51	6AW–45244–00	NUT TUERCA		1				
52	6JE–45550–00	GEAR SET JUEGO DE ENGRANAJE		1				
53	90201–18023	WASHER, PLATE ARANDELA PLANA		1				
54	90179–18009	NUT TUERCA		1				
55	6JE–45560–00	GEAR 1 (26T) ENGRANAJE 1 (26T)		1				
56	6JE–45611–00	SHAFT, PROPELLER EJE PROPUSOR		1				
57	6JE–45641–00	SHIFTER CAMBIO		1				
58	61A–45634–01	SLIDE, SHIFT DESLIZADOR, CAMBIO		1				
59	6AW–45632–00	PIN, CROSS PASADOR TRANSVERSAL		1				
60	6AW–45631–00	CLUTCH, DOG EMBRAGUE DE GARRA		1				
61	6AW–45633–00	RING, CROSS PIN ANILLO DE PASADOR		1				
62	6H1–45668–00	SHAFT, FREE 1 EJE 1		1				
63	61A–45635–00	PLUNGER, SHIFT EMBOLO DE CAMBIO		2				
64	90201–02M00	WASHER, PLATE ARANDELA PLANA		1				
65	90183–02M03	NUT, SPRING TUERCA DE RESORTE		2				
66	90501–10M77	SPRING, COMPRESSION RESORTE DE COMPRESION		1				
67	93501–04011	BALL BOLA		2				

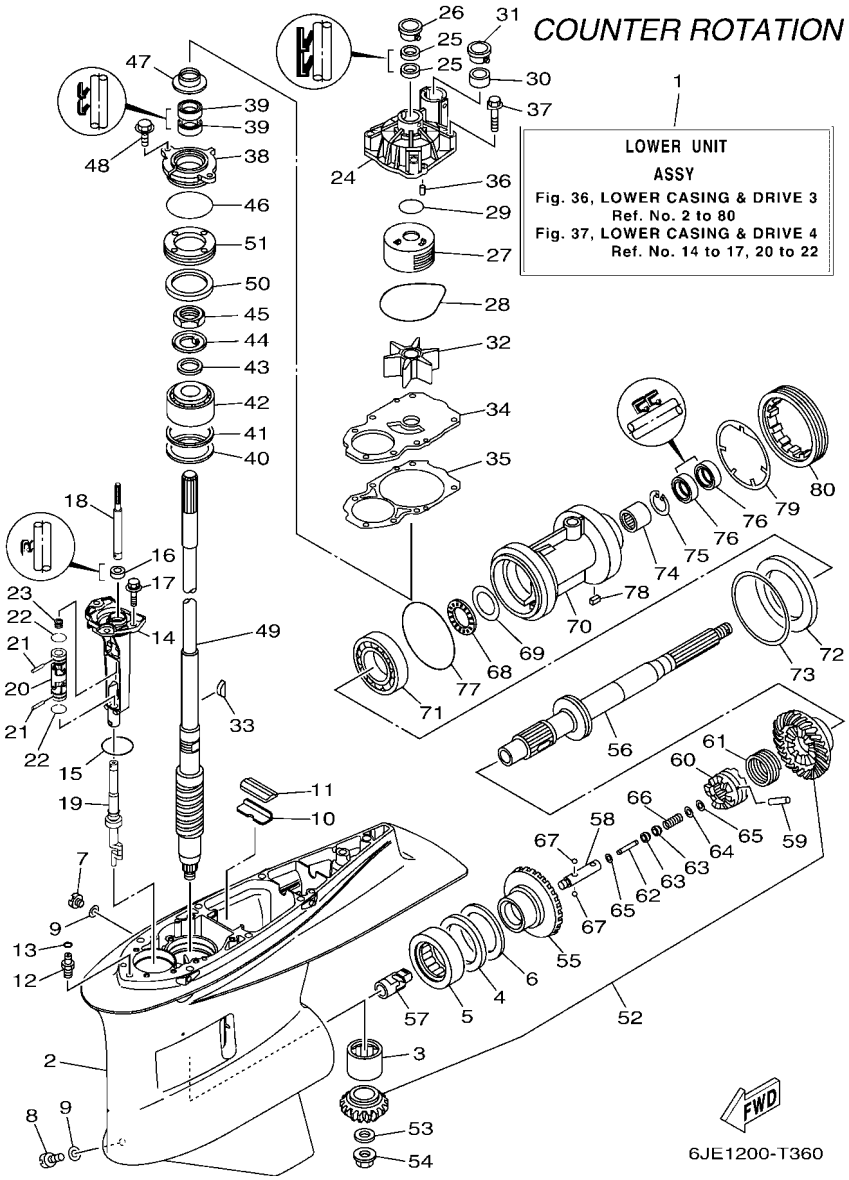

FIG. 36 LOWER CASING & DRIVE 3 — IMPULSOR E INFERIOR 3

REF. NO.	PART NO. CODIGO Nº	DESCRIPTION DESCRIPCION	6JD1	6JE1				REMARKS OBSERVACIONES
68	93341–440U5	BEARING COJINETES CON RODAMIENTOS		1				
69	6K1–45578–01	SHIM (T:0.10MM) LAINA (T:0.10MM)		1				UR UR
	6K1–45578–10	SHIM (T:0.12MM) LAINA (:0.12MM)		1				UR UR
	6K1–45578–20	SHIM (T:0.15MM) LAINA (T:0.15MM)		1				UR UR
	6K1–45578–30	SHIM (T:0.18MM) LAINA (T:0.18MM)		1				UR UR
	6K1–45578–40	SHIM (T:0.30MM) LAINA (T:0.30MM)		1				UR UR
	6K1–45578–50	SHIM (T:0.40MM) LAINA (T:0.40MM)		1				UR UR
	6K1–45578–60	SHIM (T:0.50MM) LAINA (T:0.50MM)		1				UR UR
70	6AX–45332–00	HOUSING, BEARING CAJA BALERO 2		1				
71	93332–000A2	BEARING COJINETE		1				
72	6AW–45576–00	WASHER, THRUST 2 ARANDELA DE EMPUJE AXIAL 2		1				
73	6AW–45577–00	SHIM (T:0.10MM) LAINA (T:0.10MM)		1				UR UR
	6AW–45577–10	SHIM (T:0.12MM) LAINA (T:0.12MM)		1				UR UR
	6AW–45577–20	SHIM (T:0.15MM) LAINA (T:0.15MM)		1				UR UR
	6AW–45577–30	SHIM (T:0.18MM) LAINA (T:0.18MM)		1				UR UR
	6AW–45577–40	SHIM (T:0.30MM) LAINA (T:0.30MM)		1				UR UR
	6AW–45577–50	SHIM (T:0.40MM) LAINA (T:0.40MM)		1				UR UR
	6AW–45577–60	SHIM (T:0.50MM) LAINA (T:0.50MM)		1				UR UR
74	93311–63591	BEARING COJINETE DE RODILLOS		1				
75	99009–47500	CIRCLIP PRESILLA REDONDA		1				
76	93101–35019	OIL SEAL SELLO ACEITE		2				
77	93211–10232	O-RING ANILLO O		1				
78	90282–05008	KEY, STRAIGHT CHAVETA, RECTA		1				
79	6AW–45383–00	WASHER, CLAW ARANDELA DE UNA		1				
80	6AW–45384–00	NUT TUERCA		1				

FIG. 37 LOWER CASING & DRIVE 4 — IMPULSOR E INFERIOR 4

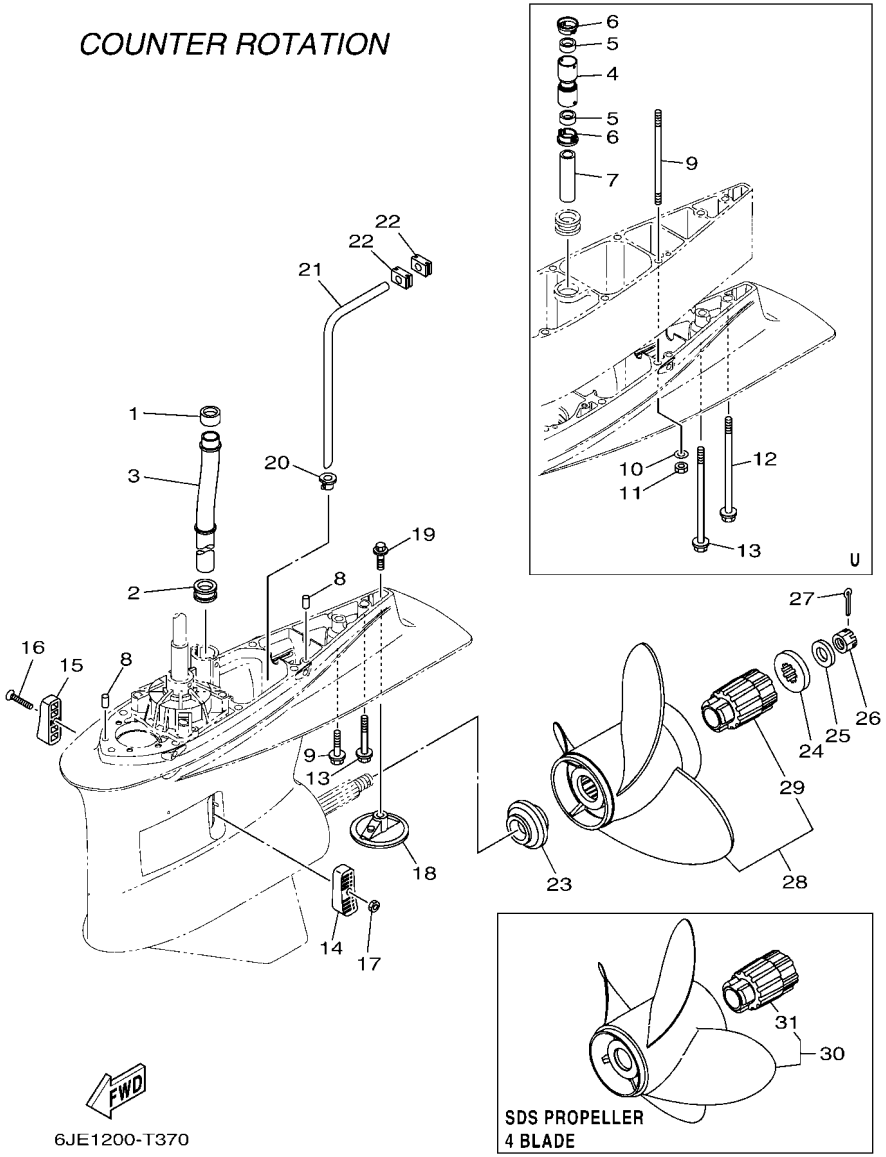

REF. NO.	PART NO. CODIGO Nº	DESCRIPTION DESCRIPCION	6JD1	6JE1				REMARKS OBSERVACIONES
1	6AW–44365–00	DAMPER, WATER SEAL 1 HULE DE SELLO DE AGUA 1		1				
2	6AW–44366–00	DAMPER, WATER SEAL 2 GOMA DEL SELLO DE AGUA 2		1				
3	6CE–44361–00	TUBE, WATER 1 TUBO DE AGUA 1		1				
4	6CE–44362–00	TUBE, WATER 2 TUBO DE AGUA 2		1				U(30.3") U(30.3")
5	6AW–44365–00	DAMPER, WATER SEAL 1 HULE DE SELLO DE AGUA 1		2				U(30.3") U(30.3")
6	6AW–44312–00	COVER, WATER PUMP HOUSING CUBIERTA CAJA BOMBA DE AGUA		2				U(30.3") U(30.3")
7	6AW–44363–00	TUBE, WATER 3 TUBO DE AGUA 3		1				U(30.3") U(30.3")
8	93608–16M16	PIN, DOWEL PASADOR DE CLAVIJA		2				
9	90119–10024	BOLT, WITH WASHER TORNILLO CON ARANDELA		7				X(25.3") X(25.3")
	90116–10067	BOLT, STUD ESPARRAGO		6				U(30.3") U(30.3")
10	92995–10600	WASHER ARANDELA		6				U(30.3") U(30.3")
11	95380–10600	NUT TUERCA		6				U(30.3") U(30.3")
12	90119–10008	BOLT, WITH WASHER TORNILLO CON ARANDELA		1				U(30.3") U(30.3")
13	97E75–10570	BOLT, HEXAGON W/W DEEP RECESS TORNILLO HEXAGONAL CON RONDONA		1				X(25.3") X(25.3")
	90119–10009	BOLT, WITH WASHER TORNILLO CON ARANDELA		1				U(30.3") U(30.3")
14	6AW–45214–00	COVER, WATER INLET 1 CUBIERTA ENTRADA AGUA 1		1				
15	6AW–45215–00	COVER, WATER INLET 2 CUBIERTA ENTRADA AGUA 2		1				
16	90152–05003	SCREW, COUNTERSUNK TORNILLO EMBUTIDO		1				
17	90185–05002	NUT, NYLON TUERCA AUTOBLOCANTE		1				
18	6CE–45373–00	ANODE ANODO		1				
19	90105–10M00	BOLT, FLANGE TORNILLO		1				
20	6AW–44367–00	DAMPER, WATER SEAL 3 GOMA DEL SELLO DE AGUA 3		1				
21	6JD–44362–00	TUBE, WATER 2 TUBO DE AGUA 2		1				
22	6AW–44376–00	GROMMET, WATER TUBE 2 TAPON, TUBO DE AGUA 2		2				
23	6AW–45987–00	SPACER 1 ESPACIADOR 1		1				
24	6AW–45997–00	SPACER 2 ESPACIADOR 2		1				
25	90201–19M01	WASHER, PLATE ARANDELA PLANA		1				

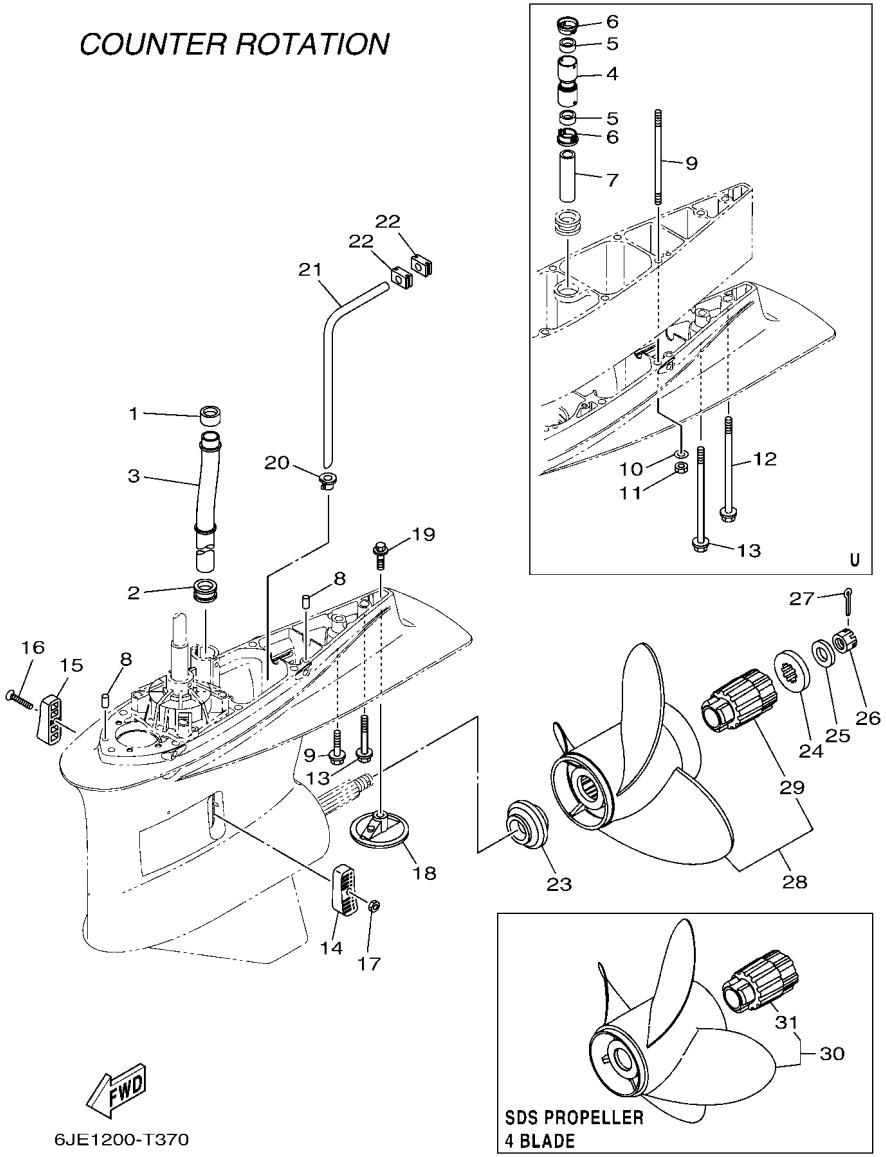

FIG. 37 LOWER CASING & DRIVE 4 — IMPULSOR E INFERIOR 4

REF. NO.	PART NO. CODIGO Nº	DESCRIPTION DESCRIPCION	6JD1	6JE1				REMARKS OBSERVACIONES
26	90171–18M04	NUT, CASTLE TUERCA ENTALLADA		1				
27	91490–40030	PIN. COTTER CHAVETA		1				
28	6AX–45930–20	PROPELLER (3X16-1/4"X13"-XL) PROPELA (3X16-1/4"X13"-XL)		1				UR SDS 3 BLADE UR SDS 3 BLADE
	6AX–45970–20	PROPELLER (3X16-1/4"X15"-XL) PROPELA (3X16-1/4"X15"-XL)		1				UR SDS 3 BLADE UR SDS 3 BLADE
	6AX–45972–20	PROPELLER (3X16-1/4"X17"-XL) PROPELA (3X16-1/4"X17"-XL)		1				UR SDS 3 BLADE UR SDS 3 BLADE
	6AX–45974–20	PROPELLER (3X15-1/2"X19"-XL) PROPELA (3X15-1/2"X19"-XL)		1				UR SDS 3 BLADE UR SDS 3 BLADE
	6AX–45976–20	PROPELLER (3X15-1/4"X21"-XL) PROPELA (3X15-1/4"X21"-XL)		1				UR SDS 3 BLADE UR SDS 3 BLADE
	6AX–45978–20	PROPELLER (3X15-1/4"X23"-XL) PROPELA (3X15-1/4"X23"-XL)		1				UR SDS 3 BLADE UR SDS 3 BLADE
29	6AW–45C81–10	.DAMPER RUBBER, PROPELLER 1 .AMORTIGUADOR PROPELA 1		1				
30	6AX–45B70–20	PROPELLER (4X16-1/8"X15"-XL) PROPELA (4X16-1/8"X15"-XL)		1				UR SDS 4 BLADE UR SDS 4 BLADE
	6AX–45B72–20	PROPELLER (4X16-1/8"X17"-XL) PROPELA (4X16-1/8"X17"-XL)		1				UR SDS 4 BLADE UR SDS 4 BLADE
	6AX–45B76–20	PROPELLER (4X15-3/8"X22"-XL) PROPELA (4X15-3/8"X22"-XL)		1				UR SDS 4 BLADE UR SDS 4 BLADE
	6AX–45B74–20	PROPELLER (4X15-3/8"X24"-XL) PROPELA (4X15-3/8"X24"-XL)		1				UR SDS 4 BLADE UR SDS 4 BLADE
31	6AW–45C81–10	.DAMPER RUBBER, PROPELLER 1 .AMORTIGUADOR PROPELA 1		1				

FIG. 38 STEERING GUIDE ATTACHMENT 1 — ADITAMENTO GUIA DE GOBIERNO 1

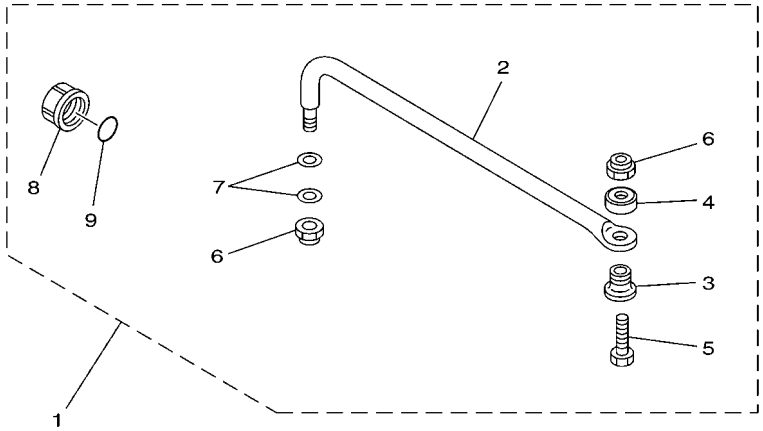

67H0100-9290

REF. NO.	PART NO. CODIGO Nº	DESCRIPTION DESCRIPCION	6JD1	6JE1				REMARKS OBSERVACIONES
1	6E5–61350–02	STEERING GUIDE ATTACHMENT KIT ESTUCHE ADITAMENTO GUIA DE TIM	1					AP AP
2	6E5–61351–01	.ROD, STEERING LINK .VARILLA ESLABON DIRECCION	1					
3	90387–10M61	.COLLAR .ESPACIADOR	1					
4	90560–12M01	.SPACER .SEPARADOR	1					
5	6E5–61355–00	.BOLT .TORNILLO	1					
6	90185–09M01	.NUT, SELF-LOCKING .TUERCA AUTOBLOCANTE	2					
7	90201–10M20	.WASHER, PLATE .ARANDELA PLANA	2					
8	6E5–43145–01	.CAP, CLAMP BRACKET .TAPA	1					
9	93210–16275	.O-RING .ANILLO O	1					

FIG. 39 STEERING GUIDE ATTACHMENT 2 — ADITAMENTO GUIA DE GOBIERNO 2

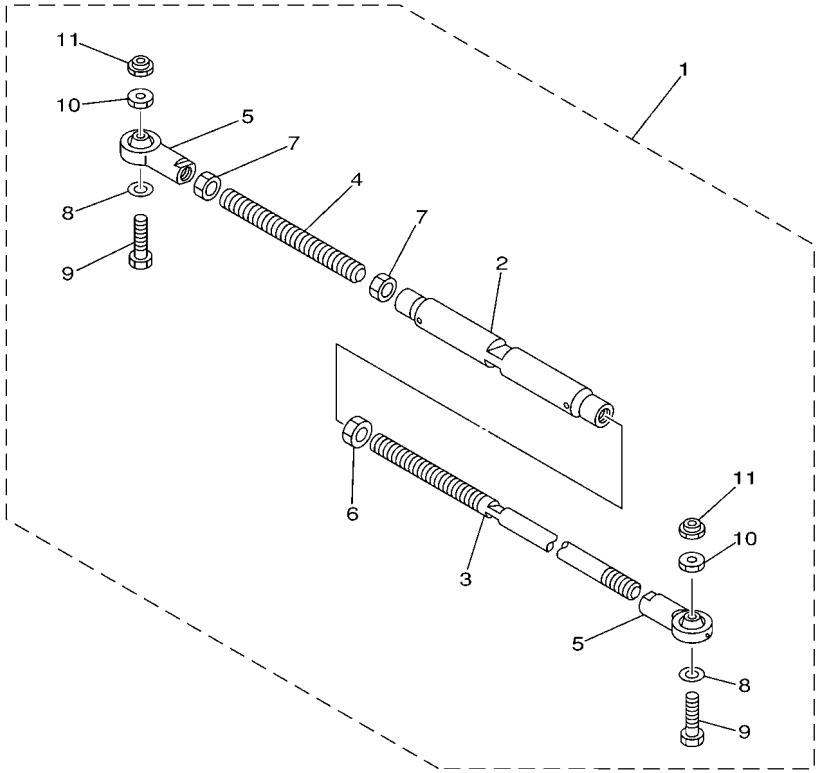

67H0100-0300

REF. NO.	PART NO. CODIGO Nº	DESCRIPTION DESCRIPCION	6JD1	6JE1				REMARKS OBSERVACIONES
1	6E5–61301–01	TWIN KIT (L:600-800MM) KIT ADITAMENTO (L:600-800MM)		1				AP AP
2	6E5–61313–00	.ADJUSTER .AJUSTADOR		1				
3	6E5–61311–11	.TIE BAR .BARRA SEPARADORA		1				
4	6E5–61315–00	.TIE BAR .ROTOR DE BOMBA AGUA		1				
5	6E5–61303–00	.STEERING AXLE COMP. .OJO-DIRECCION COMPL.		2				
6	90170–14M06	.NUT .TUERCA		1				
7	95380–14700	.NUT .TUERCA		2				
8	90201–10M76	.WASHER, PLATE .ARANDELA PLANA		2				
9	90101–09M70	.BOLT .TORNILLO		2				
10	90170–09M05	.NUT .TUERCA		2				
11	90185–09M01	.NUT, SELF-LOCKING .TUERCA AUTOBLOCANTE		2				

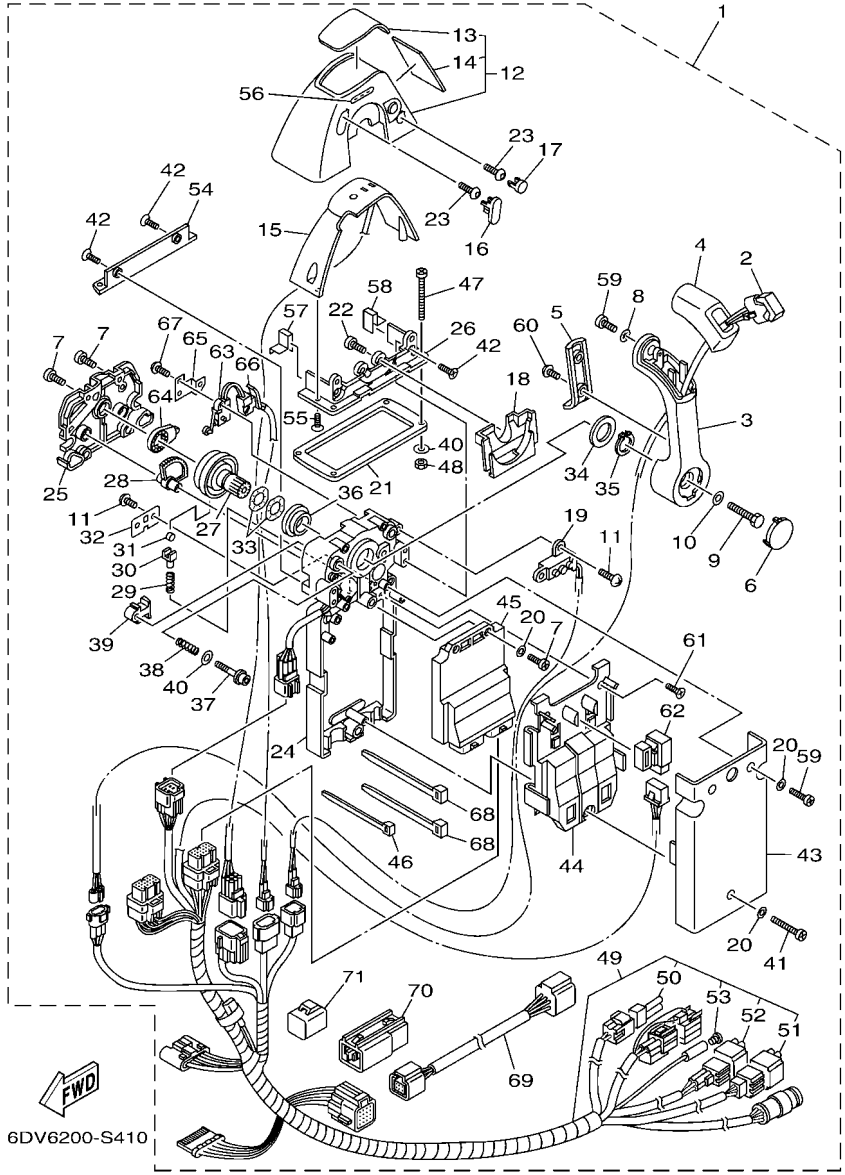

FIG. 40 DBW REMOTE CONTROL 1 (SINGLE) CAJA DE CONTROL 1 (UNICO)

REF. NO.	PART NO. CODIGO Nº	DESCRIPTION DESCRIPCION	6JD1	6JE1				REMARKS OBSERVACIONES
1	6X6–48205–61	REMOTE CONTROL ASSY (SINGLE) REMOTO CONTROL COMPL.	1					NOT FOR SALE NOT FOR SALE
2	6X6–82563–01	.TRIM & TILT SWITCH ASSY .INTERRUPTOR DE INCLINACION	1					
3	6X6–48221–00	.LEVER, CONTROL .PALANCA CONTROL	1					
4	6X6–48222–00	.GRIP, CONTROL LEVER .MANGO DE PALANCA CONTROL	1					
5	6X6–48224–00	.COVER, CONTROL LEVER .CUBIERTA DE PALANCA CONTROL	1					
6	6X6–48224–10	.COVER, CONTROL LEVER .CUBIERTA DE PALANCA CONTROL	1					
7	98580–05014	.SCREW, PAN HEAD .TORNILLO DE CABEZA CRUZADA	6					
8	92990–05300	.WASHER, INTERNAL TOOTH .ARANDELA PLANA	1					
9	6X6–48171–00	.BOLT .TORNILLO	1					
10	92990–08600	.WASHER, PLATE .ARANDELA PLANA	1					
11	EL8–48127–00	.SCREW 1 .TORNILLO 1	4					
12	6X6–48119–04	.COVER .CUBIERTA	1					
13	6X6–48215–30	..GRAPHIC ..CALCOMANIA 1	1					
14	6X6–48216–00	..GRAPHIC ..CALCOMANIA 2	1					
15	6X6–84301–00	.PILOT LIGHT ASSY 1 .LUZ PILOTO COMPLETA 1	1					
16	6X6–48167–00	.PLUG .TAPON AGUJERO	1					
17	6X6–48167–50	.PLUG .TAPON AGUJERO	1					
18	6X6–48219–00	.COVER, LEAD .CUBIERTA	1					
19	6X6–8259E–00	.SWITCH ASSY .INTERRUPTOR COMPL	1					
20	92990–05200	.WASHER, PLAIN .ARANDELA PLANA	5					
21	6X6–48176–00	.GROMMET .TOPON	1					
22	98580–04010	.SCREW, PAN HEAD .TORNILLO DE CABEZA CRUZADA	2					
23	6X6–48267–C0	.BOLT SET .JUEGO DE TORNILLO	2					
24	6X6–481A0–02	.REMO-CON. CASE ASSY .CAJA COMPLET	1					
25	6X6–48212–00	.BACK PLATE 1 .PLACA TRASERA 1	1					
26	6X6–48144–10	.PLATE, STOPPER 2 .PLACA, RETEN 2	1					
27	6X6–48242–02	.SHAFT, DRIVE .EJE, PROPULSION	1					

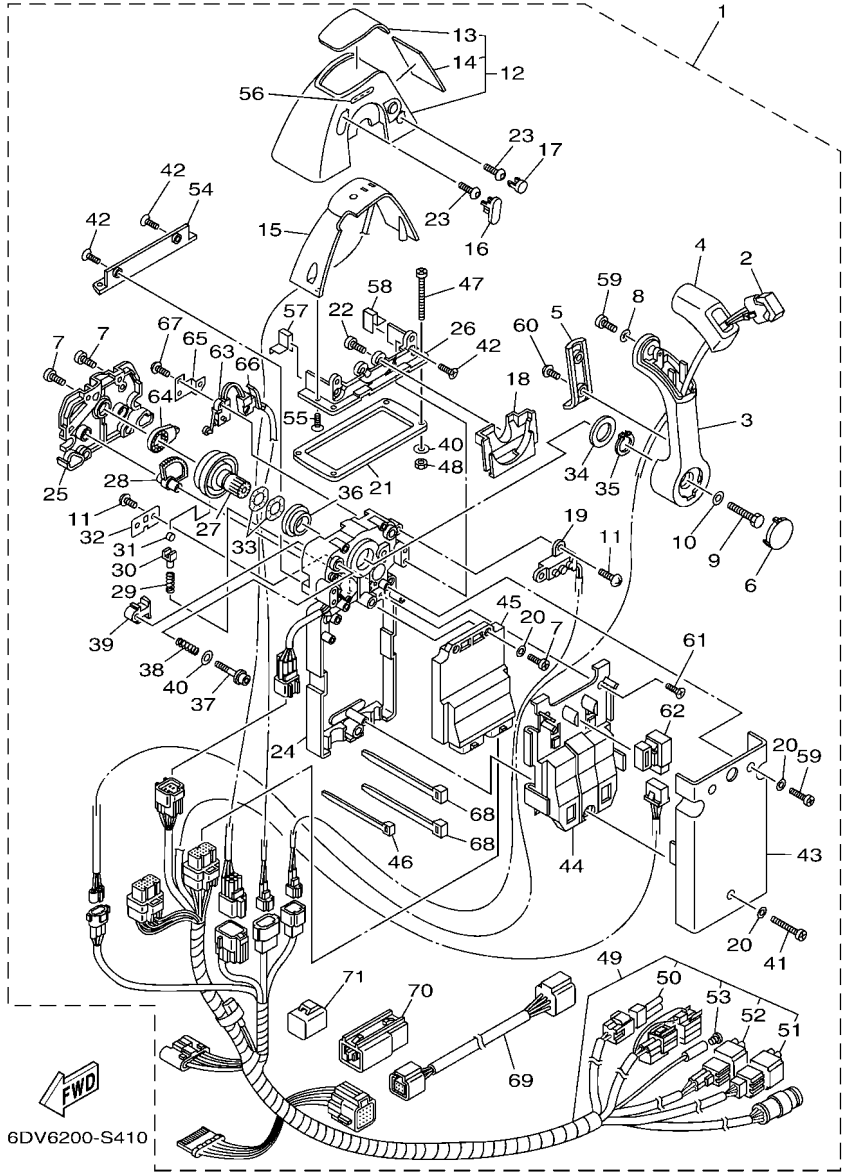

FIG. 40 DBW REMOTE CONTROL 1 (SINGLE) CAJA DE CONTROL 1 (UNICO)

REF. NO.	PART NO. CODIGO Nº	DESCRIPTION DESCRIPCION	6JD1	6JE1				REMARKS OBSERVACIONES
28	6X6–48233–01	.GEAR 2 .ENGRANAJE 2	1					
29	6X6–48238–00	.SPRING, DETENT .RESORTE	1					
30	6X6–48237–00	.ADAPTOR .ADAPTADOR	1					
31	6X6–48236–00	.ROLLER, DETENT .RODILLO	1					
32	6X6–48189–00	.RETAINER .RETENEDOR	1					
33	703–48198–00	.WASHER, WAVE .RONDANA ONDULADA 3	2					
34	6X6–48193–00	.WASHER 3 .RONDANA 3	1					
35	6X6–48118–00	.CLIP, SHIFT LEVER .CLIP DE PALANCADELCAMBIO	1					
36	6X6–48234–00	.BUSHING 1 .BUJE	1					
37	6X6–48267–00	.BOLT SET .JUEGO DE TORNILLO	1					
38	6X6–48158–00	.SPRING 1 .RESORTE 1	1					
39	6X6–48264–00	.FRICTION, THROTTLE .FRICCION DE ACELERADOR	1					
40	704–48287–00	.WASHER .ARANDELA	5					
41	6X6–81145–01	.SCREW 1 .TORNILLO 1	1					
42	6X6–81147–00	.SCREW 3 .TORNILLO 3	4					
43	6X6–48213–00	.BACK PLATE 2 .PLACA TRASERA 2	1					
44	6X6–48228–01	.HOLDER, SWITCH .MORDAZA	1					
45	6X6–85590–31	.CONTROL UNIT ASSY .UNIDAD DE CONTROL COMPLETA	1					
46	703–82591–00	.BAND .BANDA	2					
47	97780–50145	.SCREW, TAPPING .TORNILLO DE CABEZA DE CONO ACH	4					UR UR
	98580–05060	.SCREW, PAN HEAD .TORNILLO DE CABEZA CRUZADA	4					UR UR
48	95380–05600	.NUT .TUERCA	4					
49	6X6–82580–J0	.WIRE HARNESS ASSY 2 .CONJUNTO DE CABLES 2	1					
50	6X6–82585–20	..CAP 2 (2P) ..TAPA 2 (2P)	1					
51	6X6–82585–60	..CAP 2 (6P) ..TAPA 2 (6P)	1					
52	6Y8–82582–11	..CAP 1 (4PIN) ..TAPA 1	1					
53	703–82119–00	..COVER, LEAD WIRE ..CUBIERTA DE CABLE CONDUCTOR	1					

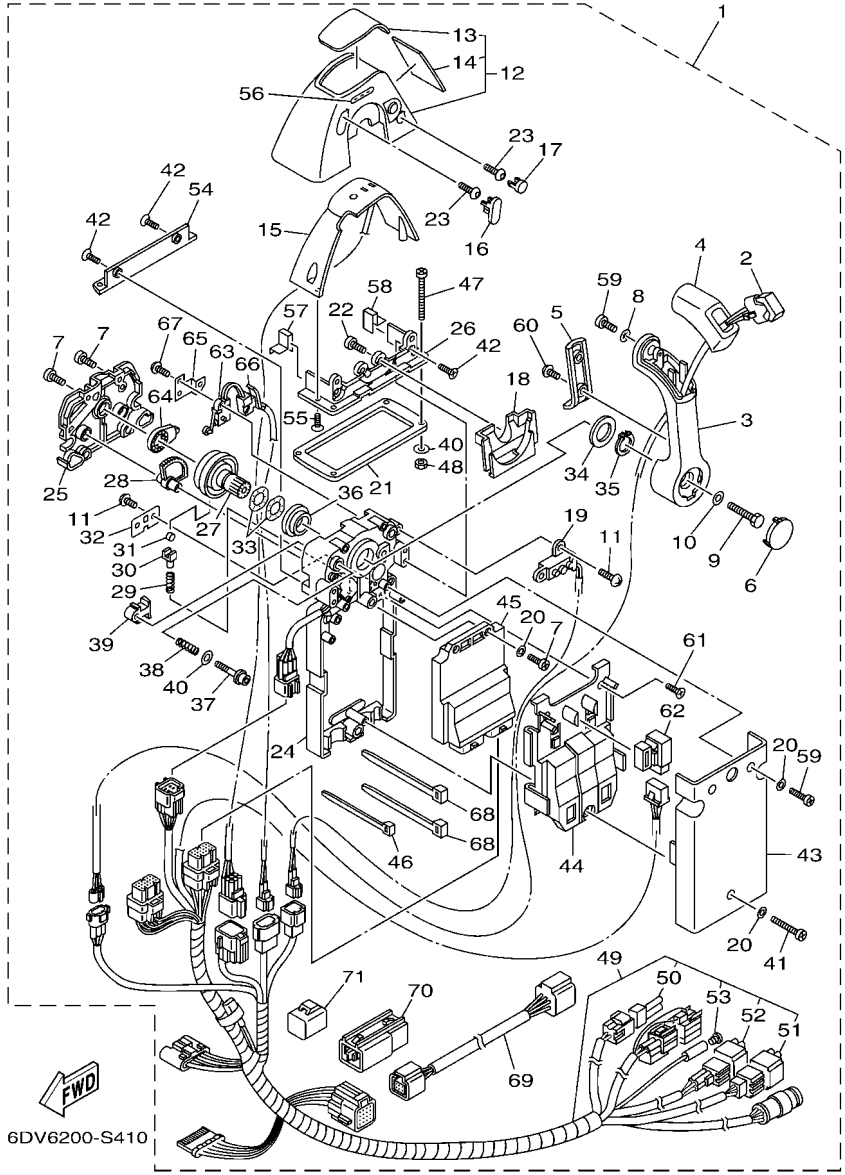

FIG. 40 DBW REMOTE CONTROL 1 (SINGLE) CAJA DE CONTROL 1 (UNICO)

REF. NO.	PART NO. CODIGO Nº	DESCRIPTION DESCRIPCION	6JD1	6JE1				REMARKS OBSERVACIONES
54	6X6–48144–00	.PLATE, STOPPER 2 .PLACA, RETEN 2	1					
55	6X6–48129–01	.SCREW 3 .TORNILLO 3	2					
56	6X6–44191–10	.INDICATOR, SHIFT .INDICADOR DE CAMBIOS	1					
57	6X6–48176–50	.GROMMET .TOPON	1					
58	6X6–48176–60	.GROMMET .TOPON	1					
59	6X6–48127–01	.SCREW 1 .TORNILLO 1	3					
60	6X6–48128–00	.SCREW 2 .TORNILLO 2	2					
61	6X6–81146–01	.SCREW 2 .TORNILLO 2	2					
62	704–81950–10	.RELAY ASSY .RELE COMPLETO	1					
63	6X6–82540–00	.NEUTRAL SWITCH ASSY .INTERRUPTOR NEUTRAL COMPL	1					
64	6X6–48241–00	.ARM, DRIVE .BRAZO,MANDO	1					
65	6X6–48245–01	.PLATE, LOCK .PLACA CERRADURA	1					
66	6X6–82545–00	.GROMMET .ANILLO PROTECTOR	1					
67	6X6–8252V–00	.SCREW, SPECIAL .TORNILLO, ESPECIAL	2					
68	703–82591–10	.BAND .BANDA	4					
69	6Y8–82553–50	.10FT MAIN BUS .CABLE	1					
70	6Y8–81920–11	.IN-LINE HUB ASSY .TERMINAL COMPLETO	1					
71	6Y8–82582–11	.CAP 1 (4PIN) .TAPA 1	1					

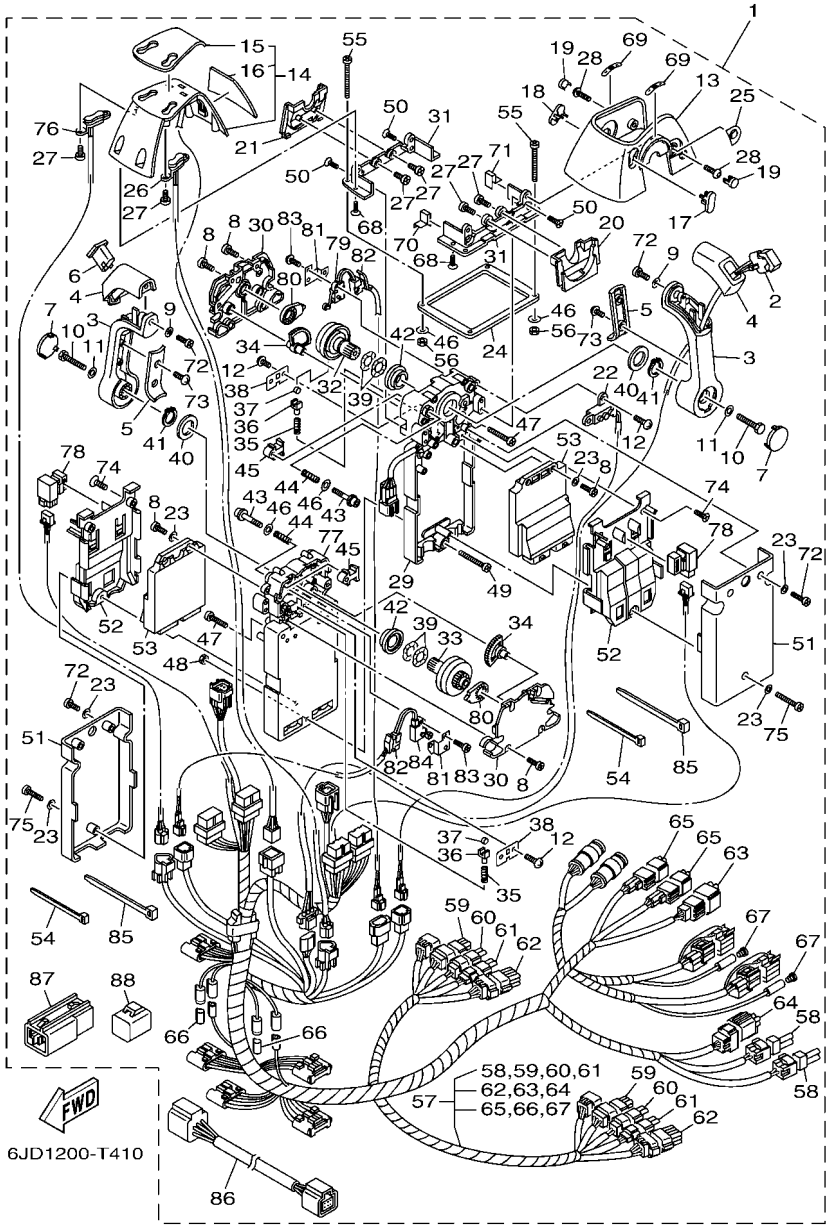

FIG. 41 DBW REMOTE CONTROL 2 (TWIN) CAJA DE CONTROL 2 (DOBLE)

REF. NO.	PART NO. CODIGO Nº	DESCRIPTION DESCRIPCION	6JD1	6JE1				REMARKS OBSERVACIONES
1	6X6–48207–61	REMOTE CONTROL ASSY (TWIN) REMOTO CONTROL COMPL.		1				NOT FOR SALE NOT FOR SALE
	6X6–48207–71	REMOTE CONTROL ASSY (TWIN) REMOTO CONTROL COMPL.		1				NOT FOR SALE NOT FOR SALE
2	6X6–82563–01	.TRIM & TILT SWITCH ASSY .INTERRUPTOR DE INCLINACION		1				
3	6X6–48221–00	.LEVER, CONTROL .PALANCA CONTROL		2				
4	6X6–48222–00	.GRIP, CONTROL LEVER .MANGO DE PALANCA CONTROL		2				
5	6X6–48224–00	.COVER, CONTROL LEVER .CUBIERTA DE PALANCA CONTROL		2				
6	6X6–48222–10	.GRIP, CONTROL LEVER .MANGO DE PALANCA CONTROL		1				
7	6X6–48224–10	.COVER, CONTROL LEVER .CUBIERTA DE PALANCA CONTROL		2				
8	98580–05014	.SCREW, PAN HEAD .TORNILLO DE CABEZA CRUZADA		12				
9	92990–05300	.WASHER, INTERNAL TOOTH .ARANDELA PLANA		2				
10	6X6–48171–00	.BOLT .TORNILLO		2				
11	92990–08600	.WASHER, PLATE .ARANDELA PLANA		2				
12	EL8–48127–00	.SCREW 1 .TORNILLO 1		6				
13	6X6–48119–10	.COVER .CUBIERTA		1				
14	6X6–84301–13	.PILOT LIGHT ASSY 1 .LUZ PILOTO COMPLETA 1		1				
15	6X6–48215–40	..GRAPHIC ..CALCOMANIA 1		1				
16	6X6–48216–10	..GRAPHIC ..CALCOMANIA 2		1				
17	6X6–48167–10	.PLUG .TAPON AGUJERO		1				
18	6X6–48167–20	.PLUG .TAPON AGUJERO		1				
19	6X6–48167–60	.PLUG .TAPON AGUJERO		2				
20	6X6–48219–10	.COVER, LEAD .CUBIERTA		1				
21	6X6–48219–20	.COVER, LEAD .CUBIERTA		1				
22	6X6–8259E–00	.SWITCH ASSY .INTERRUPTOR COMPL		1				
23	92990–05200	.WASHER, PLAIN .ARANDELA PLANA		10				
24	6X6–48176–10	.GROMMET .TOPON		1				
25	6X6–48225–00	.COVER .CUBIERTA		1				
26	6X6–82563–40	.TRIM & TILT SWITCH ASSY .INTERRUPTOR DE INCLINACION		1				

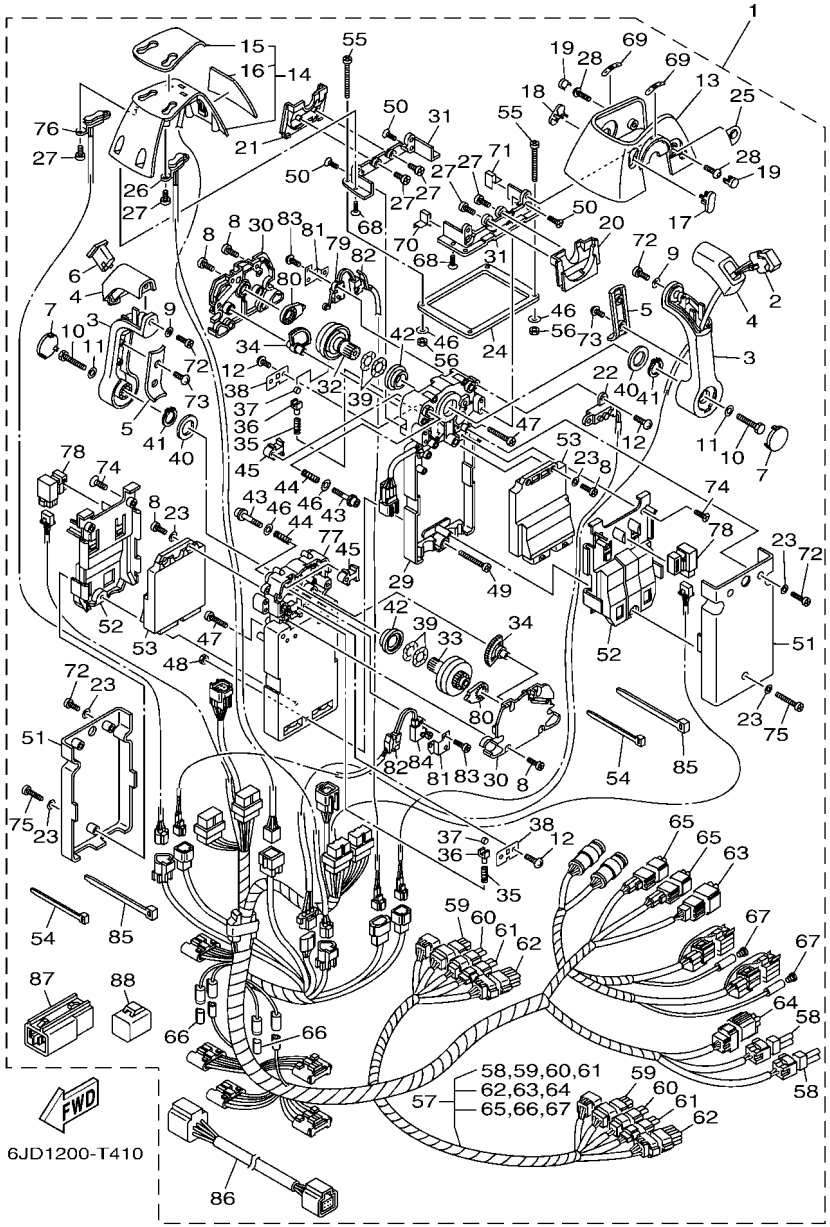

FIG. 41 DBW REMOTE CONTROL 2 (TWIN) CAJA DE CONTROL 2 (DOBLE)

REF. NO.	PART NO. CODIGO Nº	DESCRIPTION DESCRIPCION	6JD1	6JE1				REMARKS OBSERVACIONES
27	98580–04010	.SCREW, PAN HEAD .TORNILLO DE CABEZA CRUZADA		8				
28	6X6–48267–C0	.BOLT SET .JUEGO DE TORNILLO		2				
29	6X6–481A0–02	.REMO-CON. CASE ASSY .CAJA COMPLET		1				
30	6X6–48212–00	.BACK PLATE 1 .PLACA TRASERA 1		2				
31	6X6–48144–10	.PLATE, STOPPER 2 .PLACA, RETEN 2		2				
32	6X6–48242–02	.SHAFT, DRIVE .EJE, PROPULSION		1				
33	6X6–48242–12	.SHAFT, DRIVE .EJE, PROPULSION		1				
34	6X6–48233–01	.GEAR 2 .ENGRANAJE 2		2				
35	6X6–48238–00	.SPRING, DETENT .RESORTE		2				
36	6X6–48237–00	.ADAPTOR .ADAPTADOR		2				
37	6X6–48236–00	.ROLLER, DETENT .RODILLO		2				
38	6X6–48189–00	.RETAINER .RETENEDOR		2				
39	703–48198–00	.WASHER, WAVE .RONDANA ONDULADA 3		4				
40	6X6–48193–00	.WASHER 3 .RONDANA 3		2				
41	6X6–48118–00	.CLIP, SHIFT LEVER .CLIP DE PALANCADELCAMBIO		2				
42	6X6–48234–00	.BUSHING 1 .BUJE		2				
43	6X6–48267–00	.BOLT SET .JUEGO DE TORNILLO		2				
44	6X6–48158–00	.SPRING 1 .RESORTE 1		2				
45	6X6–48264–00	.FRICTION, THROTTLE .FRICCION DE ACELERADOR		2				
46	704–48287–00	.WASHER .ARANDELA		6				
47	98580–05025	.SCREW, PAN HEAD .TORNILLO DE CABEZA CRUZADA		2				
48	704–48156–00	.NUT 1 .TUERCA 1		1				
49	704–48283–00	.SCREW .TORNILLO 3		1				
50	6X6–81147–00	.SCREW 3 .TORNILLO 3		4				
51	6X6–48213–00	.BACK PLATE 2 .PLACA TRASERA 2		2				
52	6X6–48228–01	.HOLDER, SWITCH .MORDAZA		2				
53	6X6–85590–31	.CONTROL UNIT ASSY .UNIDAD DE CONTROL COMPLETA		2				

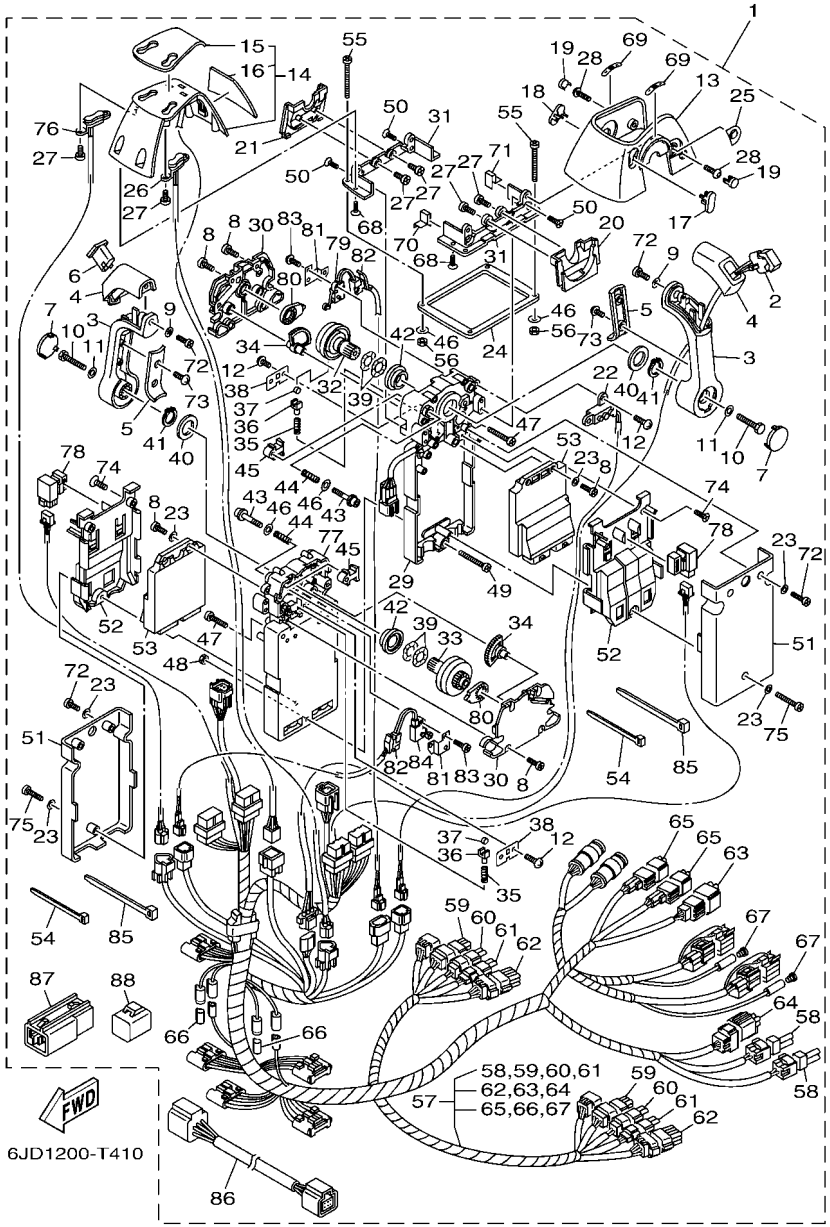

FIG. 41 DBW REMOTE CONTROL 2 (TWIN) CAJA DE CONTROL 2 (DOBLE)

REF. NO.	PART NO. CODIGO Nº	DESCRIPTION DESCRIPCION	6JD1	6JE1				REMARKS OBSERVACIONES
54	703–82591–00	.BAND .BANDA		4				
55	97780–50145	.SCREW, TAPPING .TORNILLO DE CABEZA DE CONO ACH		4				UR UR
	98580–05060	.SCREW, PAN HEAD .TORNILLO DE CABEZA CRUZADA		4				UR UR
56	95380–05600	.NUT .TUERCA		4				
57	6X6–82580–K0	.WIRE HARNESS ASSY 2 .CONJUNTO DE CABLES 2		1				FOR 6X6-48207-61 FOR 6X6-48207-61
	6X6–82580–B0	.WIRE HARNESS ASSY 2 .CONJUNTO DE CABLES 2		1				FOR 6X6-48207-71 FOR 6X6-48207-71
58	6X6–82585–20	..CAP 2 (2P) ..TAPA 2 (2P)		2				
59	6X6–82582–60	..CAP 1 (6P) ..TAPA 1 (6P)		2				FOR 6X6-82580-B0 FOR 6X6-82580-B0
60	6X6–82582–40	..CAP 1 (4P) ..TAPA 1 (4P)		2				FOR 6X6-82580-B0 FOR 6X6-82580-B0
61	6X6–82582–A0	..CAP 1 (3P) ..TAPA 1 (3P)		2				FOR 6X6-82580-B0 FOR 6X6-82580-B0
62	6X6–82582–C0	..CAP 1 (12P) ..TAPA 1 (12P)		2				FOR 6X6-82580-B0 FOR 6X6-82580-B0
63	6X6–82585–70	..CAP 2 (6P) ..TAPA 2 (6P)		1				
64	6X6–8257Y–70	..CAP 2 (6P) ..TAPA 2 (6P)		1				FOR 6X6-82580-B0 FOR 6X6-82580-B0
65	6Y8–82582–11	..CAP 1 (4PIN) ..TAPA 1		2				
66	6X6–82585–00	..CAP 2 ..TAPA 2		2				
67	703–82119–00	..COVER, LEAD WIRE ..CUBIERTA DE CABLE CONDUCTOR		2				
68	6X6–48129–01	.SCREW 3 .TORNILLO 3		4				
69	6X6–44191–10	.INDICATOR, SHIFT .INDICADOR DE CAMBIOS		2				
70	6X6–48176–50	.GROMMET .TOPON		1				
71	6X6–48176–60	.GROMMET .TOPON		1				
72	6X6–48127–01	.SCREW 1 .TORNILLO 1		6				
73	6X6–48128–00	.SCREW 2 .TORNILLO 2		4				
74	6X6–81146–01	.SCREW 2 .TORNILLO 2		4				
75	6X6–81145–01	.SCREW 1 .TORNILLO 1		2				
76	6X6–82563–50	.TRIM & TILT SWITCH ASSY .INTERRUPTOR DE INCLINACION		1				
77	6X6–481A0–22	.REMO-CON. CASE ASSY .CAJA COMPLET		1				
78	704–81950–10	.RELAY ASSY .RELE COMPLETO		2				

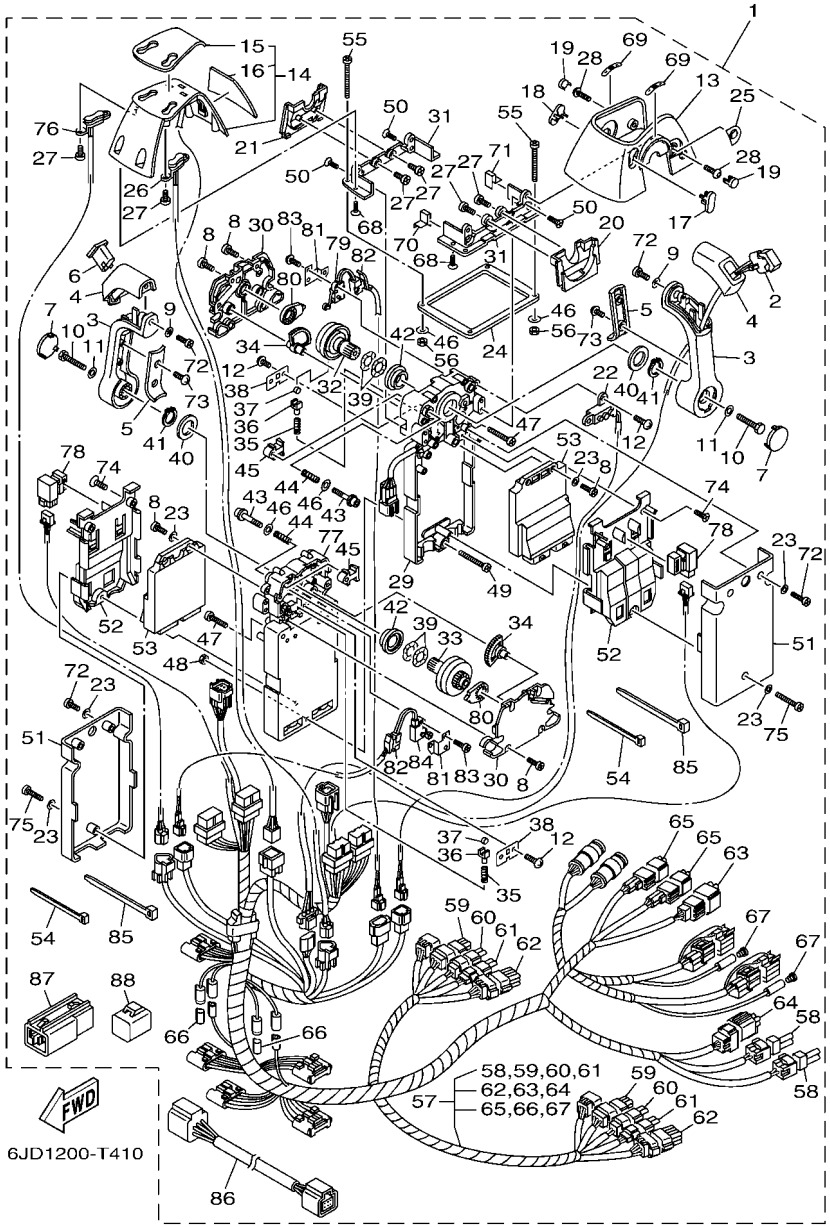

FIG. 41 DBW REMOTE CONTROL 2 (TWIN) CAJA DE CONTROL 2 (DOBLE)

REF. NO.	PART NO. CODIGO Nº	DESCRIPTION DESCRIPCION	6JD1	6JE1				REMARKS OBSERVACIONES
79	6X6–82540–00	.NEUTRAL SWITCH ASSY .INTERRUPTOR NEUTRAL COMPL		1				
80	6X6–48241–00	.ARM, DRIVE .BRAZO,MANDO		2				
81	6X6–48245–01	.PLATE, LOCK .PLACA CERRADURA		2				
82	6X6–82545–00	.GROMMET .ANILLO PROTECTOR		2				
83	6X6–8252V–00	.SCREW, SPECIAL .TORNILLO, ESPECIAL		4				
84	6X6–82540–10	.NEUTRAL SWITCH ASSY .INTERRUPTOR NEUTRAL COMPL		1				
85	703–82591–10	.BAND .BANDA		8				
86	6Y8–82553–50	.10FT MAIN BUS .CABLE		1				
87	6Y8–81920–11	.IN-LINE HUB ASSY .TERMINAL COMPLETO		1				
88	6Y8–82582–11	.CAP 1 (4PIN) .TAPA 1		1				

FIG. 42 OPTIONAL PARTS 1 — PARTES OPCIONALES 1

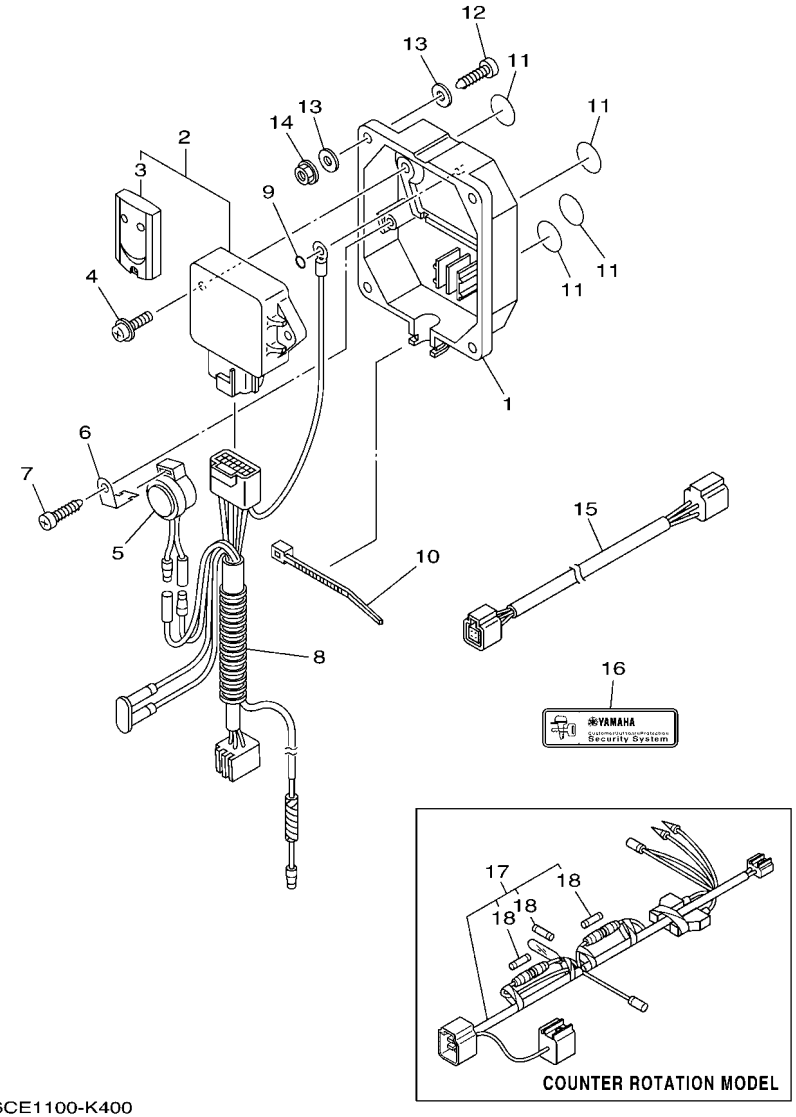

6CE1100-K400

REF. NO.	PART NO. CODIGO Nº	DESCRIPTION DESCRIPCION	6JD1	6JE1				REMARKS OBSERVACIONES
1	6Y8–86267–00	CASE COMPLETE 1 CAJA COMPLETA 1	1					FOR CAR FOR CAR
2	6Y8–86260–12	REMOTE CONTROL UNIT ASSY UNIDAD DE CONTROL REMOTO COMPL	1					FOR CAR FOR CAR
3	6AA–86261–22	.XMTR. COMP. .XMTR. COMP.	2					
4	97980–06216	SCREW, WITH WASHER TORNILLO, CON ARANDELA	2					FOR CAR FOR CAR
5	6X4–83383–00	BUZZER ZUMBADOR	1					FOR CAR FOR CAR
6	6X4–83386–00	STAY, BUZZER TIRANTE DE ZUMBADOR	1					FOR CAR FOR CAR
7	97780–60620	SCREW, TAPPING TORNILLO DE CABEZA DE CONO ACH	1					FOR CAR FOR CAR
8	6Y8–82509–10	WIRE, SUB LEAD CABLE SUBCONDUCTOR	1					FOR CAR FOR CAR
9	93210–04279	O-RING ANILLO O	1					FOR CAR FOR CAR
10	90465–11M10	CLAMP BRIDA	1					FOR CAR FOR CAR
11	6Y8–8454G–00	PATCH 1 PARCHE 1	4					FOR CAR FOR CAR
12	90167–06M00	SCREW, TAPPING TORNILLO DE ROSCA HEMBRA	4					UR FOR CAR UR FOR CAR
	97880–06035	SCREW, PAN HEAD TORNILLO DE CABEZA CON PLANA	4					UR FOR CAR UR FOR CAR
13	90201–06M30	WASHER, PLATE ARANDELA PLANA	8					FOR CAR FOR CAR
14	95780–06300	NUT, FLANGE TUERCA	4					FOR CAR FOR CAR
15	6Y8–82521–11	2FT PIGTAIL BUS CABLE CONDUCTOR	1					FOR CAR FOR CAR
16	6Y8–48277–00	STICKER 1 ETIQUETTE 1	4					FOR CAR FOR CAR
17	6Y8–81315–01	LEAD WIRE ASSY CABLE CONDUCTOR COMPLETO		1				AP FOR CAR AP FOR CAR
18	6TA–82151–00	.FUSE(5A) .FUSIBLE (5A)		3				

FIG. 43 OPTIONAL PARTS 2 — PARTES OPCIONALES 2

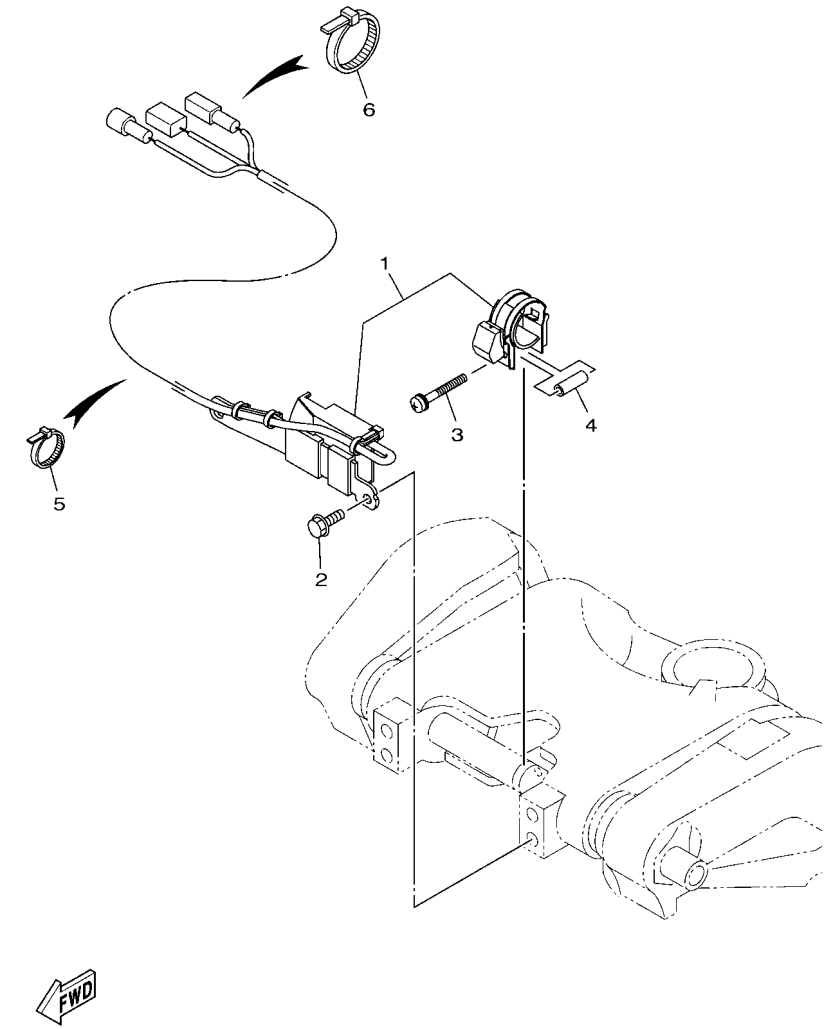

REF. NO.	PART NO. CODIGO Nº	DESCRIPTION DESCRIPCION	6JD1	6JE1				REMARKS OBSERVACIONES
1	6CE–825E0–00	TILT LIMIT SWITCH ASSY INTERRUPTOR DE LIMITE	1	1				
2	97E95–06516	BOLT, HEXAGON W/W DEEP RECESS TORNILLO HEXAGONAL CON RONDONA	2	2				
3	90159–05059	SCREW, WITH WASHER TORNILLO CON VALONA	1	1				
4	90387–05004	COLLAR ESPACIADOR	1	1				
5	90465–11M10	CLAMP BRIDA	8	8				
6	90465–13M18	CLAMP BRIDA	1	1				

FIG. 44 OPTIONAL PARTS 3 — PARTES OPCIONALES 3

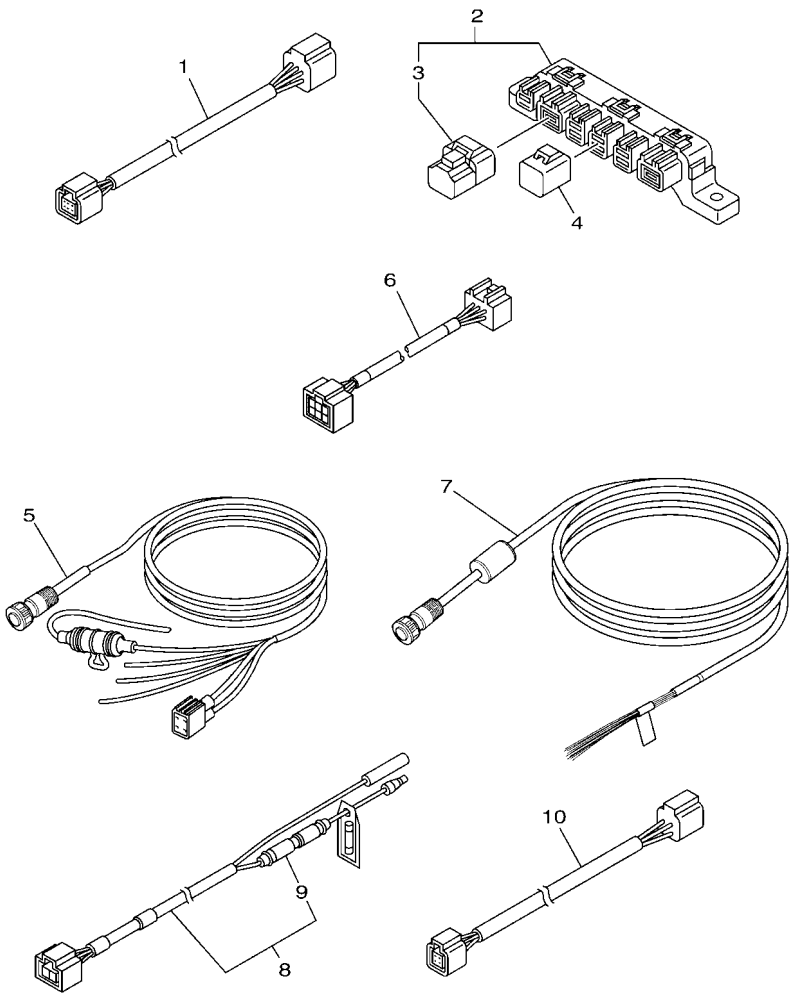

6JD1200-T440

*1:F300D (6JD) FOR SOUTH EAST ASIA
FL300D(6JE) FOR BRAZIL

REF. NO.	PART NO. CODIGO Nº	DESCRIPTION DESCRIPCION	6JD1	6JE1				REMARKS OBSERVACIONES
1	6Y8–82553–01	1FT MAIN BUS CABLE	1	1				*1 *1
2	6Y8–81920–01	MULTI HUB ASSY TERMINAL COMPLETO	1	1				*1 *1
3	6Y8–85371–01	.END OF LINE RESISTER .RESISTOR	1	1				
4	6Y8–82582–11	CAP 1 (4PIN) TAPA 1	2	2				*1 *1
5	6YD–83553–00	WIRE, LEAD CABLE CONDUCTOR	1	1				*1 *1
6	6Y9–83553–00	WIRE, LEAD CABLE CONDUCTOR	1	1				*1 *1
7	6YD–8356N–00	WIRE, LEAD CABLE CONDUCTOR	1	1				*1 *1
8	6Y8–83553–01	8FT POWER WIRE CABLE CONDUCTOR	1	1				*1 *1
9	6G1–82151–00	.FUSE (10A) .FUSIBLE (10A)	1	1				
10	6Y8–82521–31	6FT PIGTAIL BUS CABLE CONDUCTOR	1	1				*1 *1

FIG. 45 OPTIONAL PARTS 4 — PARTES OPCIONALES 4

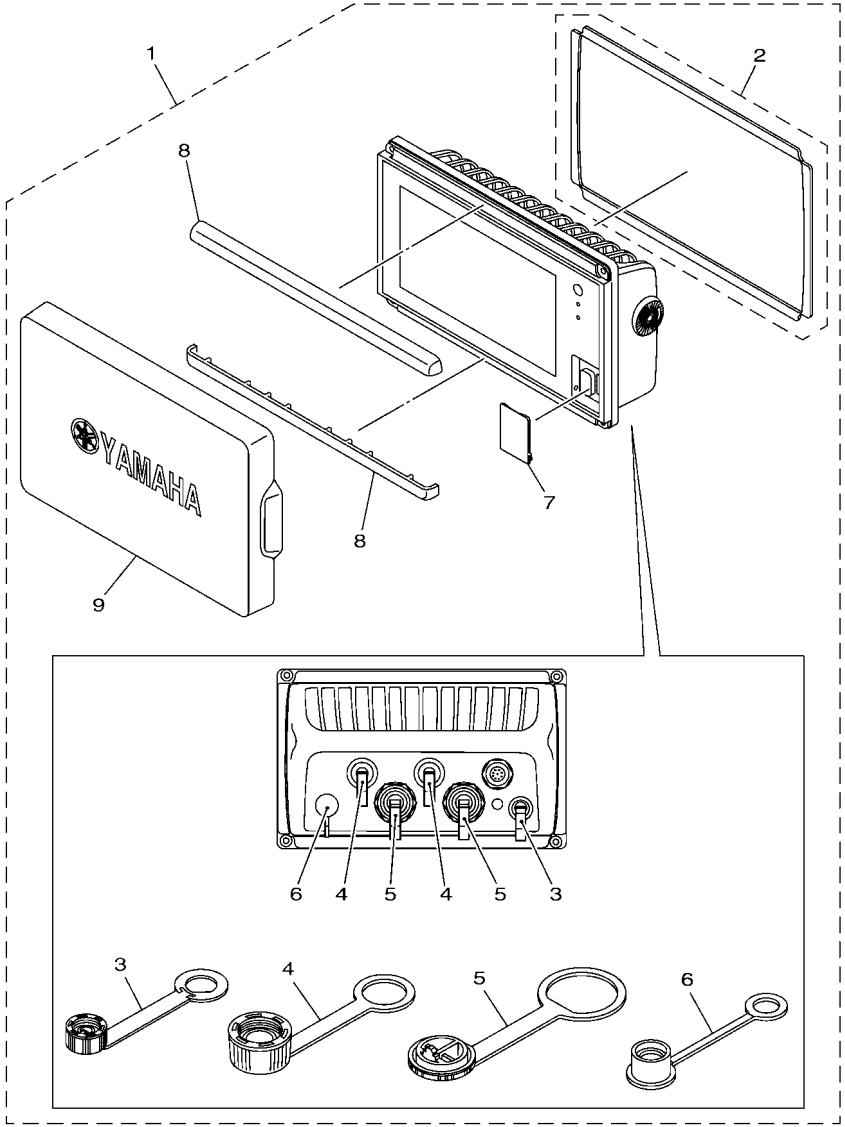

6JD1200-T450

*1:F300D (6JD) FOR CARIB, SOUTH EAST ASIA
FL300D(6JE) FOR BRAZIL

REF. NO.	PART NO. CODIGO Nº	DESCRIPTION DESCRIPCION	6JD1	6JE1				REMARKS OBSERVACIONES
1	6YD–83710–22	MULTI DISPLAY ASSY METRO DE INDICACION PLURAL	1	1				*1 *1
2	6YD–22480–00	.SEAL ASSY .JUEGO DE JUNTO	1	1				
3	6YD–83956–00	.CAP 1 .TAPA 1	1	1				
4	6YD–83957–00	.CAP 2 .TAPA 2	2	2				
5	6YD–83958–00	.CAP 3 .TAPA 3	2	2				
6	6YD–82532–00	.CAP .TAPA	1	1				
7	6YD–65722–00	.DOOR .PUERTA	1	1				
8	6YD–83512–00	.RING, SPEED METER .ANILLO	2	2				
9	6YD–87278–00	.COVER, METER .CUBIERTA DE MEDIDOR	1	1				

FIG. 46 OPTIONAL PARTS 5 — PARTES OPCIONLES 5

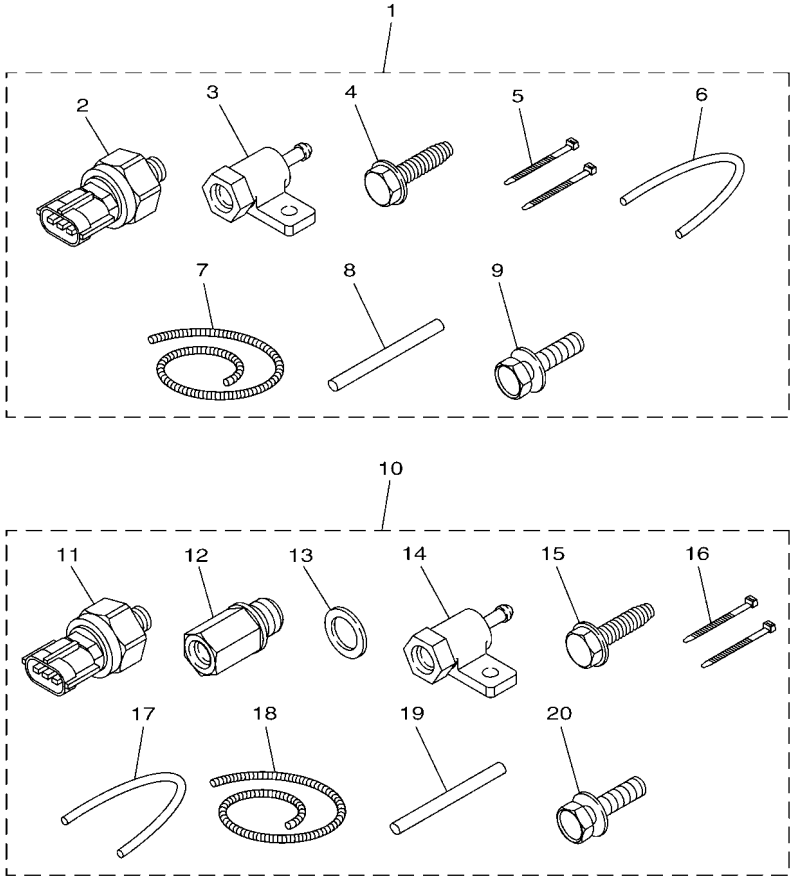

63PD370-P350

REF. NO.	PART NO. CODIGO Nº	DESCRIPTION DESCRIPCION	6JD1	6JE1				REMARKS OBSERVACIONES
1	60V–8A4L1–1A	SENSOR, MODULE 1 SENSOR COMP. 1	1					FOR NME FOR NME
2	6AW–8366B–01	.SENSOR, WATER PRESSURE .SENSOR DE PRESION AGUA	1					
3	60V–8366D–00	.ADAPTOR, INPUT .CONECTOR BANJO 3	1					
4	90109–06M81	.BOLT .PERNO	1					
5	90465–11M10	.CLAMP .BRIDA	2					
6	90445–07017	.HOSE (L: 550MM) .TUBO (L: 550MM)	1					
7	90447–07013	.HOSE, COVER (L: 700MM) .MANGUERA DE CUBIERTA (L:700MM)	1					
8	60V–42629–00	.SEAL .SELLO 2	1					
9	97E95–06516	.BOLT, HEXAGON W/W DEEP RECESS .TORNILLO HEXAGONAL CON RONDONA	1					
10	63P–8A4L2–05	SENSOR, MODULE 2 SENSOR COMP. 2	1					FOR OTH FOR OTH
11	6AW–8366B–01	.SENSOR, WATER PRESSURE .SENSOR DE PRESION AGUA	2					
12	63P–8366C–00	.ADAPTOR, INPUT .CONECTOR BANJO 2	1					
13	90430–14115	.GASKET .JUNTA	1					
14	60V–8366D–00	.ADAPTOR, INPUT .CONECTOR BANJO 3	1					
15	90109–06M81	.BOLT .PERNO	1					
16	90465–11M10	.CLAMP .BRIDA	2					
17	90445–07017	.HOSE (L: 550MM) .TUBO (L: 550MM)	1					
18	90447–07013	.HOSE, COVER (L: 700MM) .MANGUERA DE CUBIERTA (L:700MM)	1					
19	60V–42629–00	.SEAL .SELLO 2	1					
20	97E95–06516	.BOLT, HEXAGON W/W DEEP RECESS .TORNILLO HEXAGONAL CON RONDONA	1					

FIG. 47 OPTIONAL PARTS 6 — PARTES OPCIONALES 6

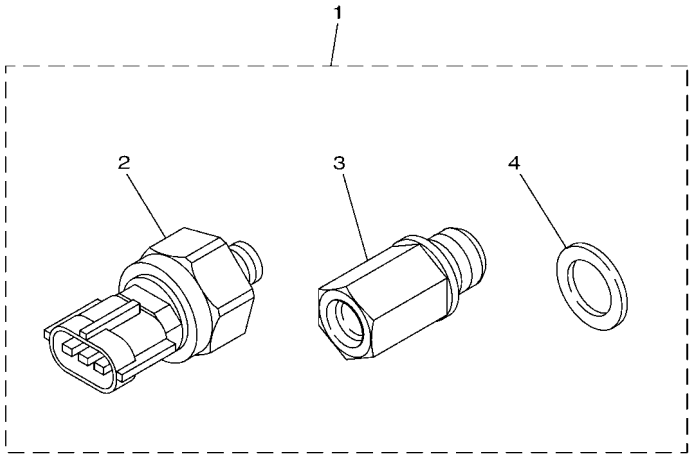

6P2B300-N410

REF. NO.	PART NO. CODIGO Nº	DESCRIPTION DESCRIPCION	6JD1	6JE1				REMARKS OBSERVACIONES
1	63P–8A4L0–11	SENSOR, MODULE SENSOR COMP.	1	1				FOR CAR,OTH FOR CAR,OTH
2	6AW–8366B–01	.SENSOR, WATER PRESSURE .SENSOR DE PRESION AGUA	1	1				
3	63P–8366C–00	.ADAPTOR, INPUT .CONECTOR BANJO 2	1	1				
4	90430–14115	.GASKET .JUNTA	1	1				

FIG. 48 OPTIONAL PARTS 7 — PARTES OPCIONALES 7

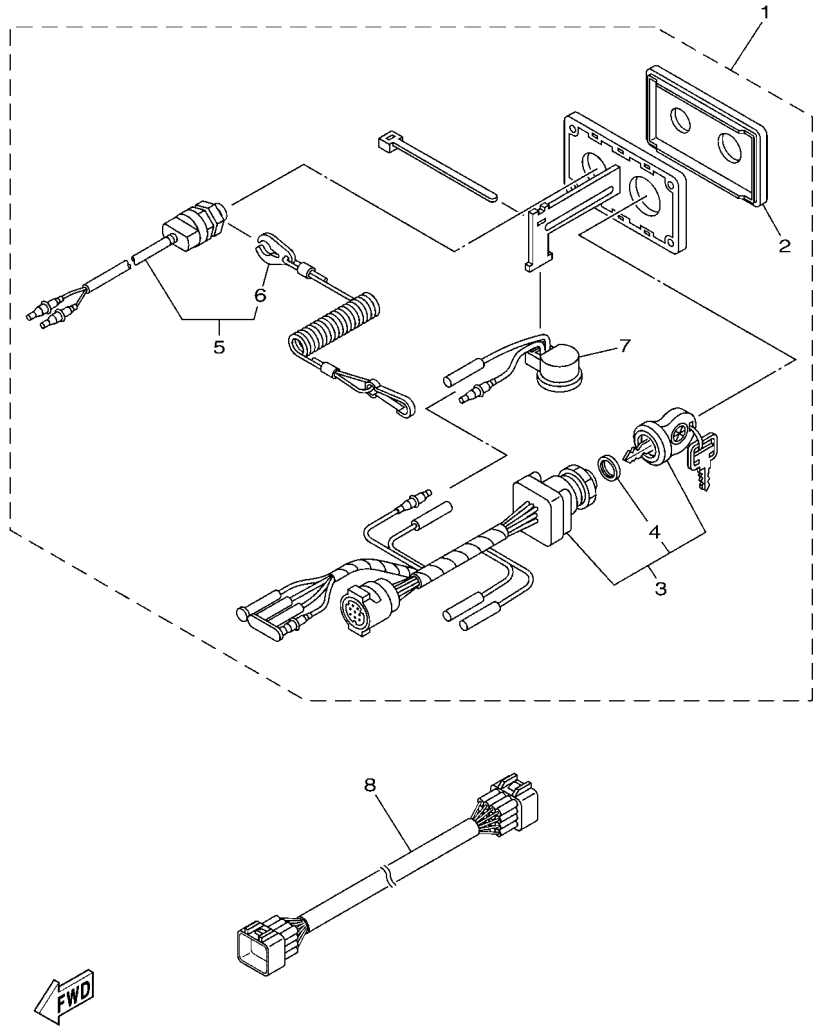

REF. NO.	PART NO. CODIGO Nº	DESCRIPTION DESCRIPCION	6JD1	6JE1				REMARKS OBSERVACIONES
1	6X6–82570–33	PANEL SWITCH ASSY INTERRUPTOR DE PANEL COMPL.	1					FOR OTH FOR OTH
2	6X6–82571–00	.PANEL, SWITCH .PANEL DE INTERRUPTOR	1					
3	6X6–82510–01	.MAIN SWITCH ASSY .CONJUNTO DE LLAVE IGNICION	1					
4	703–82532–00	..CAP ..TAPA	1					
5	688–82575–12	.ENGINE STOP SWITCH ASSY .INTERRUPTOR DE PARADA COMPL	1					
6	682–82556–00	..LANYARD, STOP SWITCH ..CORDON DE INTERRUPTOR PARADA	1					
7	703–83383–A0	.BUZZER .ZUMBADOR	1					
8	6X6–8258A–30	EXTENSION, WIRE HARNESS (10M) EXTENSION, CABLES (10M)	1					FOR OTH FOR OTH

FIG. 49 OPTIONAL PARTS 8 — PARTES OPCIONALES 8

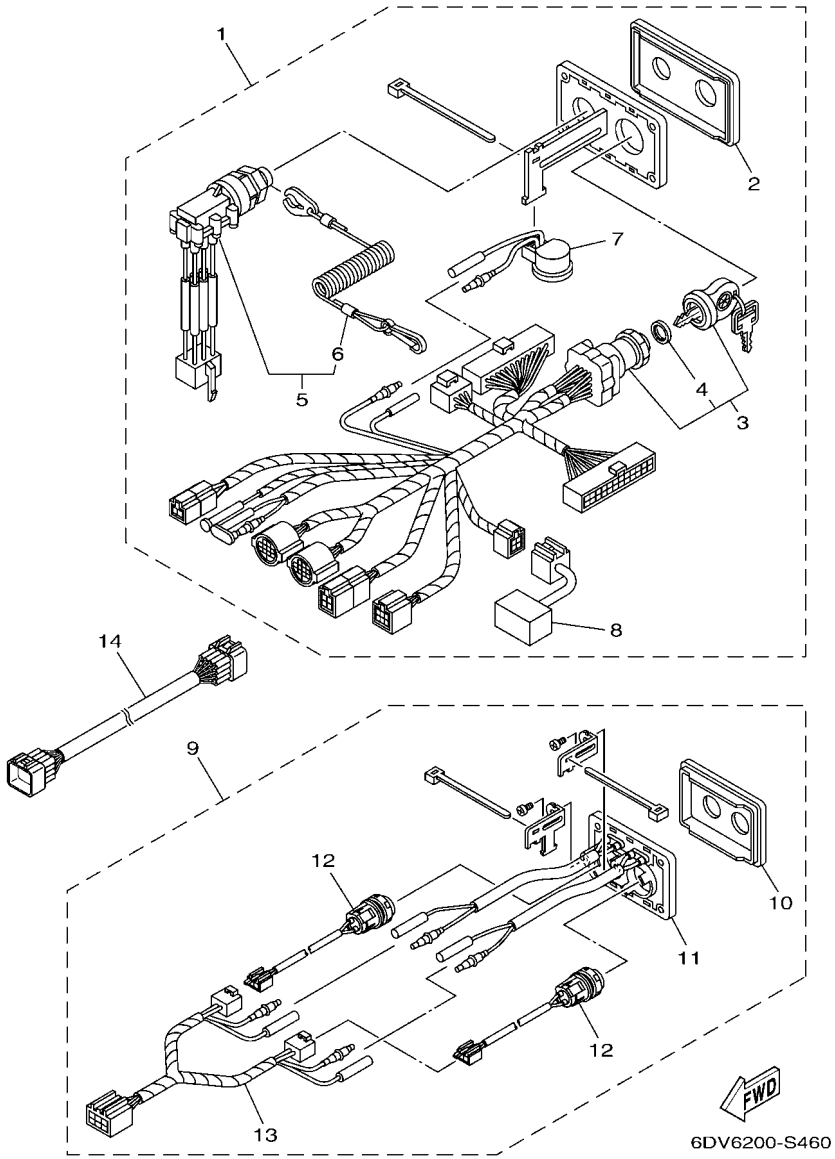

REF. NO.	PART NO. CODIGO Nº	DESCRIPTION DESCRIPCION	6JD1	6JE1				REMARKS OBSERVACIONES
1	6X6–82570–40	PANEL SWITCH ASSY INTERRUPTOR DE PANEL COMPL.		1				FOR CAR,BRA FOR CAR,BRA
2	6X6–82571–10	.PANEL, SWITCH .PANEL DE INTERRUPTOR		1				
3	6X6–82510–10	.MAIN SWITCH ASSY .CONJUNTO DE LLAVE IGNICION		1				
4	703–82532–00	..CAP ..TAPA		1				
5	6X6–82575–10	.ENGINE STOP SWITCH ASSY .INTERRUPTOR DE PARADA COMPL		1				
6	682–82556–00	..LANYARD, STOP SWITCH ..CORDON DE INTERRUPTOR PARADA		1				
7	703–83383–A0	.BUZZER .ZUMBADOR		1				
8	6X6–81980–00	.DIODE ASSY .CONJUNTO DIODO		1				
9	6X6–82570–60	PANEL SWITCH ASSY INTERRUPTOR DE PANEL COMPL.		1				FOR CAR,BRA FOR CAR,BRA
10	6X6–82571–20	.PANEL, SWITCH .PANEL DE INTERRUPTOR		1				
11	6X6–83720–00	.L.E.D ASS'Y .L.E.D COMPLETO		1				
12	6X6–8259E–20	.SWITCH ASSY .INTERRUPTOR COMPL		2				
13	6X6–82716–00	.CORD SWITCH .CABLE INTERRUPTOR		1				
14	6X6–8258A–40	EXTENSION, WIRE HARNESS (12M) EXTENSION, CABLES (12M)		1				FOR CAR FOR CAR
	6X6–8258A–40	EXTENSION, WIRE HARNESS (12M) EXTENSION, CABLES (12M)		2				FOR BRA FOR BRA

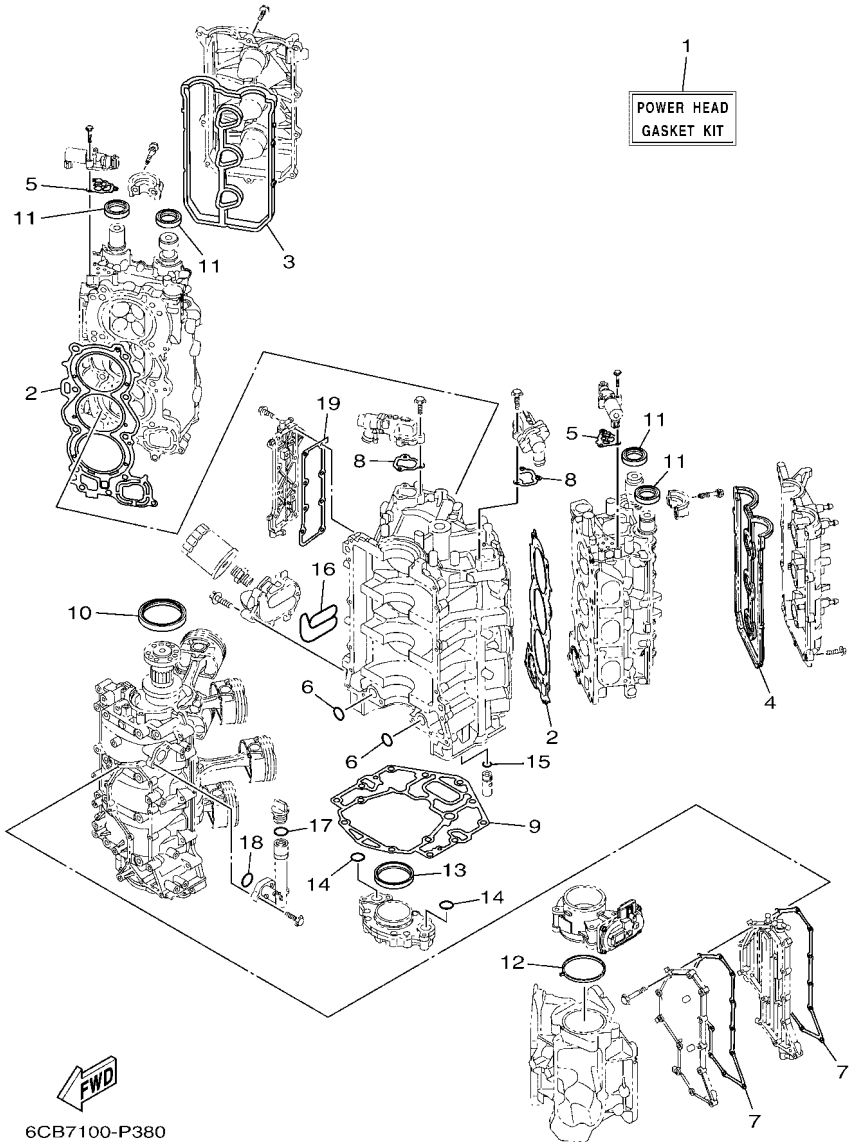

FIG. 50 REPAIR KIT 1 — ESTUCHE REPARATION 1

REF. NO.	PART NO. CODIGO Nº	DESCRIPTION DESCRIPCION	6JD1	6JE1				REMARKS OBSERVACIONES
1	6CB–W0001–03	POWER HEAD GASKET KIT JUEGO DE EMPAQUE DE MOTOR	1	1				
2	6CB–11181–00	.GASKET, CYLINDER HEAD 1 .JUNTA, DE CULATA 1	2	2				
3	6CB–11193–00	.GASKET, HEAD COVER 1 .EMPAQUE	1	1				
4	6CB–11194–00	.GASKET, HEAD COVER 2 .EMPAQUE DE TAPA DE CULATA 2	1	1				
5	6CB–1242F–00	.GASKET, FILTER .EMPAQUE DE FILTRO	2	2				
6	93210–26658	.O-RING .ANILLO O	2	2				
7	6CB–15451–01	.GASKET, CRANKCASE COVER 1 .EMPAQ DE CUBIERTA DE CARTER	2	2				
8	6CB–12427–11	.GASKET, HOUSING COVER 1 .EMPAQUE DE TAPA	2	2				
9	6CB–11351–00	.GASKET, CYLINDER .JUNTA, DE CILINDRO	1	1				
10	93102–85008	.OIL SEAL .SELLO ACEITE	1	1				
11	93102–38008	.OIL SEAL .SELLO ACEITE	4	4				
12	6CB–13556–00	.GASKET, MANIFOLD .EMPAQUE	1	1				
13	6CB–11355–00	.SEAL, CYLINDER 1 .RETEN ACEITE CILINDRO 1	1	1				
14	93210–26658	.O-RING .ANILLO O	2	2				
15	6CB–13473–00	.O-RING .ANILLO O	1	1				
16	6CB–13477–00	.GASKET .EMPAQUE	1	1				
17	93210–24M79	.O-RING .ANILLO O	1	1				
18	93210–27370	.O-RING .ANILLO O	1	1				
19	6CB–1131B–00	.GASKET, COVER .EMPAQUE DE CUBIERTA	1	1				

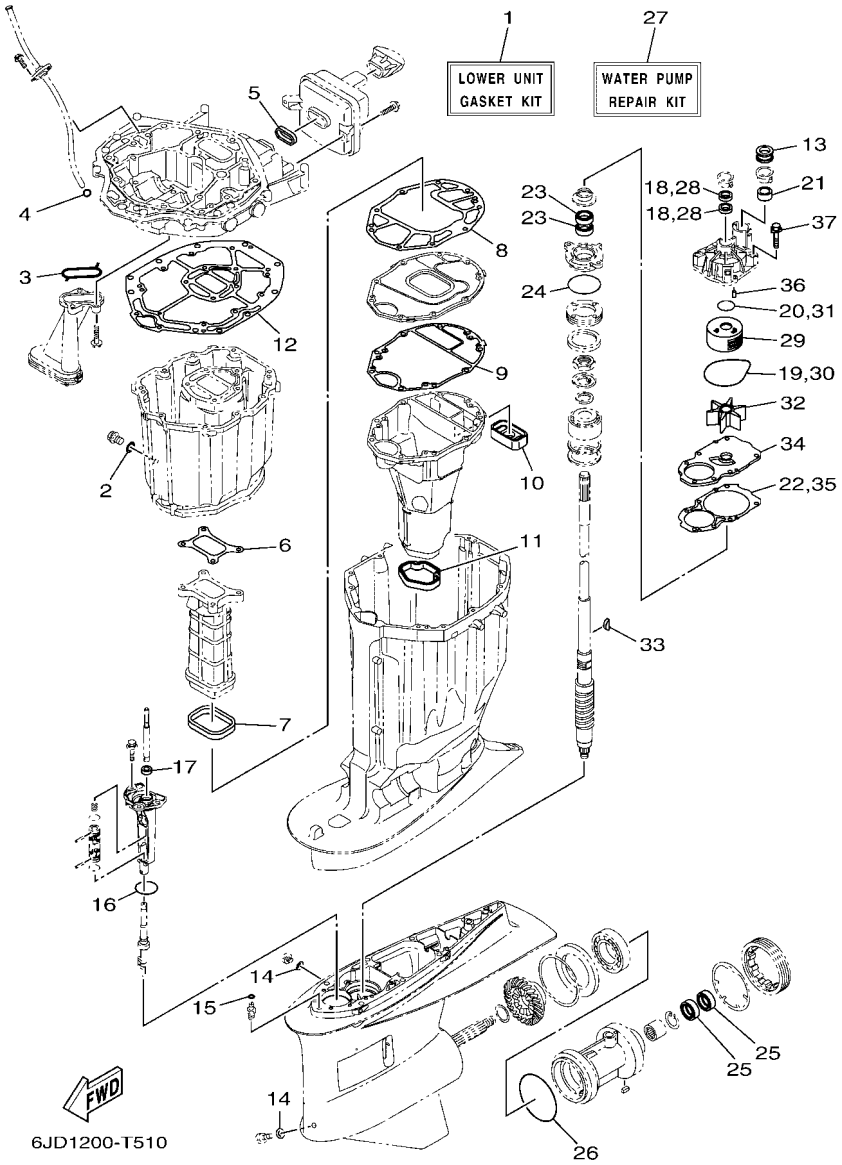

FIG. 51 REPAIR KIT 2 — ESTUCHE REPARATION 2

REF. NO.	PART NO. CODIGO Nº	DESCRIPTION DESCRIPCION	6JD1	6JE1				REMARKS OBSERVACIONES
1	6JD–W0001–20	LOWER UNIT GASKET KIT JUEGO DE EMPAQUE UNIDAD INFER.	1	1				
2	90430–14M09	.GASKET .JUNTA	1	1				
3	6AW–13415–00	.SEAL, OIL STRAINER .SELLO COLADOR ACEITE	1	1				
4	93210–19MJ3	.O-RING .ANILLO O	1	1				
5	6CB–14755–00	.GASKET, SILENCER .EMPAQUE DE SILENCIADOR	1	1				
6	6CB–41134–00	.GASKET, EXHAUST MANIFOLD .EMPAQUE	1	1				
7	6CB–41138–00	.SEAL, EXT. 1 .SELLO, ESCAPE 1	1	1				
8	6CB–41135–00	.GASKET, EXHAUST MANIFOLD .EMPAQUE	1	1				
9	6CE–41136–00	.GASKET, EXHAUST MANIFOLD 4 .EMPAQUE	1	1				
10	6CE–45127–00	.SEAL .SELLO DE GOMA	1	1				
11	6CE–45123–00	.GASKET, MUFFLER .EMPAQUE SILENCIADOR	1	1				
12	6CB–45113–01	.GASKET, UPPER CASING .EMPAQUE	1	1				
13	6AW–44366–00	.DAMPER, WATER SEAL 2 .GOMA DEL SELLO DE AGUA 2	1	1				
14	90430–08003	.GASKET .JUNTA	2	2				
15	93210–07003	.O-RING .ANILLO O	1	1				
16	93210–58144	.O-RING .ANILLO O	1	1				
17	93101–12M70	.OIL SEAL .SELLO ACEITE	1	1				
18	93104–22M07	.OIL SEAL .SELLO ACEITE	2	2				
19	93210–94003	.O-RING .ANILLO O	1	1				
20	93210–37160	.O-RING .ANILLO O	1	1				
21	6AW–44365–00	.DAMPER, WATER SEAL 1 .HULE DE SELLO DE AGUA 1	1	1				
22	6JD–44315–00	.GASKET, WATER PUMP .EMPAQUE	1	1				
23	93101–28019	.OIL SEAL .SELLO ACEITE	2	2				
24	93210–69MG6	.O-RING .ANILLO O	1	1				
25	93101–35019	.OIL SEAL .SELLO ACEITE	2	2				
26	93211–10232	.O-RING .ANILLO O	1	1				
27	6JD–W0078–00	WATER PUMP REPAIR KIT ESTUCHE REPARACION BOMBA AGUA	1	1				

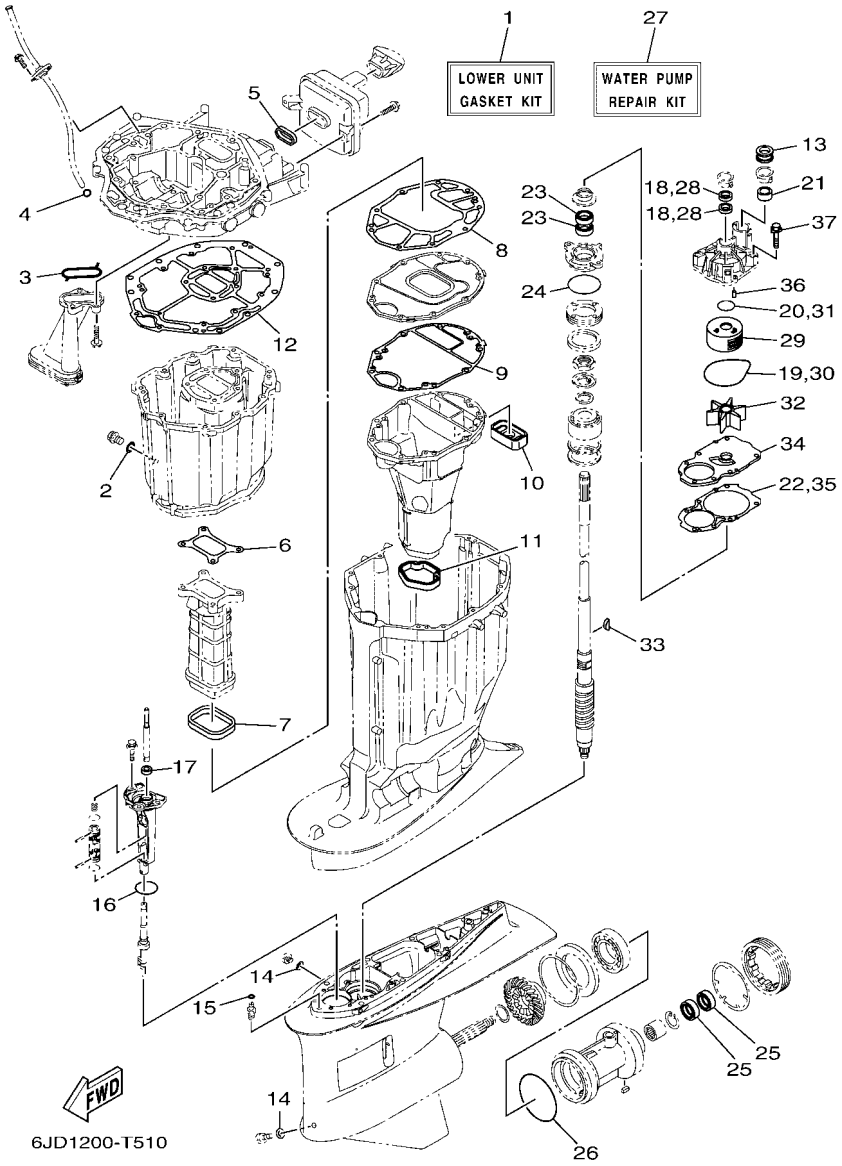

FIG. 51 REPAIR KIT 2 — ESTUCHE REPARATION 2

REF. NO.	PART NO. CODIGO Nº	DESCRIPTION DESCRIPCION	6JD1	6JE1				REMARKS OBSERVACIONES
28	93104–22M07	.OIL SEAL .SELLO ACEITE	2	2				
29	6JD–44322–00	.INSERT, CARTRIDGE .CARTUCHO	1	1				
30	93210–94003	.O-RING .ANILLO O	1	1				
31	93210–37160	.O-RING .ANILLO O	1	1				
32	6CE–44352–00	.IMPELLER .IMPULSOR	1	1				
33	90280–04002	.KEY, WOODRUFF .CUNA WOODRUFF	1	1				
34	6JD–44323–00	.OUTER PLATE, CARTRIDGE .PLACA EXTERIOR DEL CARTUCHO	1	1				
35	6JD–44315–00	.GASKET, WATER PUMP .EMPAQUE	1	1				
36	93606–12019	.PIN, DOWEL .PASADOR DE CLAVIJA	2	2				
37	90119–08M14	.BOLT, WITH WASHER .TORNILLO CON ARANDELA	4	4				

NUMERICAL INDEX
INDICE NUMERICO

PART NO. CODIGO Nº	REF. NO.
6JD–11000–00	3 – 1
6CE–11110–12–9S	5 – 2
6CE–11120–12–9S	5 – 12
6S5–11133–10	5 – 3
	5 – 13
6CB–11181–00	5 – 25
	50 – 2
6CB–11191–02	5 – 30
6CB–11192–02	5 – 34
6CB–11193–00	5 – 31
	50 – 3
6CB–11194–00	5 – 35
	50 – 4
67F–11301–00	5 – 19
6CB–1131B–00	3 – 12
	50 – 19
6CE–1131C–00–9S	3 – 9
68T–11325–00	1 – 4
	3 – 32
63P–11325–01	1 – 1
	3 – 10
	3 – 19
67F–11325–01	1 – 7
	5 – 20
63P–11325–11	1 – 16
	32 – 2
67F–11328–00	5 – 21
6AW–1132N–01	1 – 5
	3 – 34
6AW–1132P–00	1 – 3
	3 – 30
6CB–11351–00	3 – 29
	50 – 9
6CB–11355–00	33 – 13
	50 – 13
6CB–1135A–00	6 – 6
6CB–11410–00	4 – 1
6CB–11416–00	4 – 5
6CB–11416–10	4 – 5
6CB–11416–20	4 – 5
6CB–11416–30	4 – 5
6CB–11416–40	4 – 5
6CB–11417–00	4 – 6
6CB–11417–10	4 – 6
6CB–11417–20	4 – 6
6CB–11417–30	4 – 6
6CB–11417–40	4 – 6
6CB–11426–03	4 – 7

PART NO. CODIGO Nº	REF. NO.
6CB–11427–03	4 – 8
6CB–11478–00	4 – 2
6CB–1149A–00	6 – 10
6CB–11567–00	8 – 17
6CB–11590–02	8 – 28
6GR–11603–00	4 – 12
6CE–11631–02	4 – 11
6CB–11633–00	4 – 13
6CB–11654–00	4 – 10
6CB–11656–00	4 – 14
6CB–11656–10	4 – 14
6CB–11656–20	4 – 14
6CB–11998–00	5 – 42
6CB–11999–00	5 – 43
6CB–12111–00	8 – 1
6CB–12113–00	8 – 4
51Y–12119–00	8 – 7
6JD–12121–00	8 – 2
6CB–12171–00	8 – 9
6CB–12172–00	8 – 13
6CB–12181–00	8 – 11
6CB–12182–00	8 – 15
6CE–12411–00	1 – 2
	3 – 21
67F–12412–00	3 – 22
6CE–12413–A0–9S	3 – 24
6CE–12413–B0–9S	3 – 23
6CB–12422–10–9S	3 – 25
6CB–12427–11	3 – 26
	50 – 8
6CB–1242F–00	6 – 2
	50 – 5
6CB–1243E–00	7 – 15
6CE–1244G–00	7 – 12
6CE–1244H–00	7 – 14
6CE–12481–10	18 – 24
6CE–12482–10	10 – 8
6CE–12483–00	18 – 18
6CB–12483–01	10 – 26
6CB–12484–00	10 – 10
6CE–12485–00	18 – 26
6CE–1248A–00	18 – 16
6AW–12572–00	25 – 18
6CB–12576–10	7 – 3
6CB–12577–00	7 – 8
6R3–12581–00	25 – 19
6AW–12582–00	25 – 20
6R3–12583–00	25 – 21

PART NO. CODIGO Nº	REF. NO.
6P2–12615–00	8 – 25
6P2–12623–00	8 – 20
	8 – 23
6CB–12645–01	8 – 19
6CB–1264A–01	8 – 22
6P2–12663–00	8 – 21
	8 – 24
6CB–13016–00	1 – 10
	13 – 5
6AW–13119–00	33 – 11
6AW–13132–00	13 – 32
6CB–13161–10	12 – 1
6CB–13171–10	12 – 5
6CB–13300–00	33 – 9
6CB–13329–00	33 – 10
6CB–13411–00	33 – 6
6AW–13415–00	33 – 7
	51 – 3
6CE–13437–61	17 – 18
N26–13440–02	1 – 6
	3 – 36
6CE–13446–10–9S	3 – 38
6CB–13473–00	33 – 17
	50 – 15
6CB–13477–00	3 – 39
	50 – 16
6CB–13490–00	33 – 16
6CB–13532–10	10 – 2
6CB–13533–00	10 – 1
6CB–13545–00	10 – 18
6CB–13546–01	10 – 22
6CB–13547–00	10 – 23
6CB–13548–00	10 – 25
6CB–13556–00	11 – 3
	50 – 12
68V–13577–00	14 – 4
6CB–13577–00	12 – 4
	12 – 8
6CB–13593–00	13 – 22
69J–13631–00	33 – 12
6CE–13641–00	9 – 5
6CB–13645–00	9 – 6
6CB–13646–00	9 – 7
6CB–13711–00	11 – 2
63P–13716–00	13 – 21
6CB–13751–10	11 – 1
6AW–13761–00	12 – 2
	12 – 6

PART NO. CODIGO Nº	REF. NO.
6AW–13781–00	13 – 34
6CB–13782–00	10 – 16
6AW–13784–00	13 – 35
6CB–13898–11	11 – 8
6CB–13898–20	11 – 7
6CB–13906–01	13 – 8
6CB–13907–10	13 – 23
6CB–13907–20	13 – 23
63P–13915–00	1 – 11
	13 – 24
6CB–13971–01	14 – 10
6CB–13972–00	14 – 12
6CB–13974–01	14 – 11
6AW–1410B–00	12 – 3
	12 – 7
69J–14137–00	14 – 3
6CB–14146–00	13 – 10
6P2–14149–00	14 – 2
6CB–14180–11	13 – 1
6CB–14180–21	13 – 1
6CB–14181–01	13 – 15
6CB–14182–02	13 – 2
6CB–14182–20	13 – 2
6P2–14191–00	13 – 16
68V–14216–00	13 – 12
6CB–14216–00	13 – 6
6CB–14239–00	13 – 17
6P2–14386–00	13 – 37
6AW–1441J–00	9 – 11
6CB–14429–01	13 – 19
6CE–14435–00	21 – 32
6CB–14440–01	9 – 9
6CB–1447B–00	13 – 33
6CB–14546–00	13 – 26
6CB–14564–00	13 – 9
63P–14567–00	13 – 36
68V–14592–10	13 – 39
6CE–14711–01	32 – 20
6CB–14750–A0	32 – 9
6CB–14755–00	32 – 11
	51 – 5
6CB–1475A–00	10 – 27
6CB–1475F–00	10 – 28
6CB–1475G–10	10 – 31
6CB–1475H–00	13 – 13
6CB–1475J–00	13 – 14
6CE–14872–00	18 – 25
	18 – 28

PART NO. CODIGO Nº	REF. NO.
6CB–14984–00	1 – 12
	13 – 31
6CB–14985–00	13 – 25
6EK–14989–00	10 – 30
6CE–15100–10	3 – 2
6AW–15142–00	5 – 38
6CB–15142–00	6 – 8
6CB–15187–00	3 – 5
6CB–15311–01	33 – 1
6BB–15316–00	32 – 29
6CB–15319–00	3 – 43
6CB–15362–00	33 – 18
6G8–15363–00	3 – 41
6CB–15373–01	9 – 8
6CB–15377–00	33 – 19
6CE–15411–00–9S	3 – 14
6CE–15421–10–9S	3 – 15
6CB–15451–01	3 – 17
	50 – 7
6CB–15481–00	3 – 6
6CB–15512–00	8 – 29
6CB–15544–00	6 – 4
6CB–2134V–00	5 – 40
69J–2134X–00	9 – 16
6E5–21744–00	10 – 24
6YD–22480–00	45 – 2
6GR–23113–00	30 – 84
6CB–2416A–00	10 – 5
69J–24170–00	9 – 14
69J–2419A–01	9 – 15
6CB–24217–00	13 – 7
6CB–24217–10	13 – 7
60E–24300–01	14 – 9
6Y2–24307–50	16 – 1
6CB–24313–00	15 – 18
6CB–24313–10	15 – 18
6CB–24314–01	15 – 2
6CB–24314–11	15 – 2
6CB–24315–00	25 – 13
6CB–24317–00	14 – 6
6CB–24323–00	14 – 7
6CB–24324–00	14 – 5
6E5–24351–51	15 – 3
	16 – 3
6AW–24360–01	16 – 6
6Y2–24360–60	16 – 5
6G8–24376–00	10 – 29
6CE–24376–01	18 – 27

PART NO. CODIGO Nº	REF. NO.
6CE–24377–00	18 – 17
6AW–24377–01	15 – 4
688–24378–00	7 – 2
	10 – 21
	10 – 36
	18 – 30
6CE–24378–00	7 – 13
6E5–24378–00	14 – 8
68V–24379–10	13 – 11
6CB–24410–01	13 – 27
6CB–24452–10	13 – 18
4SV–24453–00	13 – 38
69J–24453–00	13 – 38
6CB–24460–00	13 – 4
6CB–24460–10	13 – 4
6CB–24461–00	14 – 1
6P3–24469–00	15 – 10
6CB–24482–00	13 – 20
6CB–24491–00	13 – 30
6CB–24492–00	13 – 28
6CB–24501–01	1 – 9
	13 – 3
6P3–24519–00	15 – 9
6P3–24560–22	15 – 7
6P3–24562–21	15 – 8
6P3–24563–01	1 – 14
	15 – 12
6P3–24564–00	1 – 13
	15 – 11
6CB–24566–00	15 – 13
6CB–24592–00	13 – 29
6CB–24596–01	15 – 20
67F–28100–11	15 – 22
67F–2812A–00	20 – 31
6CB–41132–01	32 – 13
6CB–41134–00	32 – 14
	51 – 6
6CB–41135–00	32 – 17
	51 – 8
6CE–41136–00	32 – 19
	51 – 9
6CE–41137–01	32 – 1
6CB–41138–00	32 – 16
	51 – 7
6CB–42134–00	2 – 13
6AW–42169–00	25 – 15
6CE–42195–10	27 – 8
6BG–42384–00	25 – 2

NUMERICAL INDEX
INDICE NUMERICO

PART NO. CODIGO Nº	REF. NO.
6DA–42384–00	24 – 23
6CE–42510–00–8D	29 – 5
6JD–42610–00	2 – 1
6CB–42615–01	24 – 5
6BG–42617–00	21 – 9
6CB–42617–00	21 – 10
6CE–4261A–00	2 – 2
6CB–42628–00	2 – 16
60V–42629–00	46 – 8
	46 – 19
6CB–42629–00	21 – 11
6CE–42635–00	2 – 3
6CB–42643–00	25 – 29
6CB–42644–00	25 – 30
6CB–42647–A0	2 – 6
6CB–42662–00	5 – 44
6AW–42663–00	2 – 12
6JD–42675–00	2 – 19
6JD–42676–00	2 – 20
6JD–42677–00	2 – 21
6JD–42678–00	2 – 18
6S1–4267A–00	2 – 23
6JD–42681–00	2 – 22
6AW–42697–10	2 – 17
6CB–42710–00–8D	24 – 1
6CB–42716–00	24 – 6
69J–42717–00	25 – 11
6DA–42717–00	24 – 22
69J–42723–01	21 – 26
6E5–42724–00	32 – 8
6CE–42725–02	24 – 2
6H4–42726–00	25 – 4
6H1–42726–21	25 – 1
61A–42727–00	25 – 5
64G–42727–00	25 – 6
6CE–42733–00	25 – 7
6CE–42734–00	25 – 8
6CE–42741–01–8D	26 – 1
6CB–42743–00	24 – 26
6CB–42744–00	25 – 35
6H4–42748–00	24 – 24
68F–42753–00	24 – 32
6CB–42756–00	24 – 30
69M–42758–01	18 – 5
	20 – 10
6CB–42761–00	24 – 3
6CB–42766–00	24 – 28
6CB–42769–01	32 – 12

PART NO. CODIGO Nº	REF. NO.
6CE–42771–01–8D	26 – 2
6CE–42774–A0	26 – 15
6AW–42785–00	25 – 17
6CE–42786–01	25 – 9
6CE–42787–01	25 – 10
6EE–42794–40	24 – 34
6EE–42794–50	24 – 35
6AH–42794–70	24 – 34
6CB–42815–02–8D	24 – 7
6CB–42816–02–8D	24 – 8
6CB–42817–02–8D	24 – 9
6CB–42818–00	24 – 13
6CB–42819–00	24 – 14
69J–43111–03–8D	28 – 1
69J–43111–11–8D	28 – 1
69J–43112–02–8D	28 – 12
6E5–43126–10	28 – 39
6R3–43131–00	28 – 18
6R3–43131–30	28 – 18
61A–43132–00	28 – 10
61A–43133–00	28 – 13
66T–43144–00	24 – 17
6G5–43144–00	28 – 29
6E5–43145–01	38 – 8
6G5–43148–00	28 – 34
61A–43181–01	28 – 31
6G5–43185–02	28 – 32
61A–43311–22–8D	28 – 26
61A–43376–00	29 – 3
69J–43800–10–8D	30 – 1
69J–43801–01	30 – 4
6GR–43804–00	31 – 3
6GR–43805–00	31 – 2
6GR–4380F–00	31 – 6
6CE–4380P–00	30 – 12
6CE–43810–00	30 – 3
61A–43811–00	30 – 9
61A–43813–02	30 – 18
6H1–43814–11	30 – 17
69J–43816–00	30 – 62
69J–43817–00	30 – 67
61A–43818–00	30 – 25
69J–4381C–00	30 – 30
	30 – 35
69J–4381J–00	30 – 63
69J–43820–01	30 – 78
61A–43821–01	30 – 77
69J–43822–00	30 – 76

PART NO. CODIGO Nº	REF. NO.
69J–43828–00	30 – 70
6H1–43829–00	30 – 73
69J–4382E–00	30 – 11
69J–43830–01	30 – 33
69J–43831–00	30 – 65
69J–43833–02	30 – 21
69J–43835–10	30 – 19
6CE–43840–00	30 – 2
6CJ–43841–00	30 – 42
6CJ–43843–00	30 – 53
6H1–43844–10	30 – 55
63P–43844–20	30 – 50
69J–43845–00	30 – 28
69A–4384F–00	30 – 39
69J–4384G–00	30 – 58
6H1–4384G–11	30 – 54
69J–4384H–00	30 – 10
61A–4384H–10	30 – 81
6CJ–4384M–00	30 – 38
69J–43851–00	30 – 49
69J–43853–00	30 – 45
69J–43854–00	30 – 57
69J–43855–00	30 – 52
6H1–43856–10	30 – 56
61A–43861–00	30 – 14
	30 – 16
	30 – 74
63P–43861–20	30 – 6
6D8–43863–00	30 – 27
61A–43864–00	30 – 80
6GR–43864–00	31 – 12
60V–4386A–00	30 – 44
6GR–4386K–00	31 – 7
61A–43871–00	30 – 15
69J–43871–00	30 – 61
6H1–43872–00	30 – 7
61A–43874–00	30 – 79
6H1–43875–00	30 – 29
6T4–43875–01	30 – 75
61A–43875–10	30 – 82
61A–43876–00	30 – 26
67C–43879–10	31 – 9
69J–43880–10	31 – 1
69J–43881–10	31 – 10
6GR–43882–00	31 – 11
6H1–43883–00	30 – 43
69J–43888–00	30 – 71
69J–4388E–01	30 – 23

PART NO. CODIGO Nº	REF. NO.
69J–4388F–00	30 – 68
69J–4388H–00	30 – 66
69J–4388J–00	30 – 20
6GR–43892–00	31 – 4
6CJ–43893–00	30 – 46
69J–43894–00	30 – 41
69J–43899–01	30 – 31
61A–4389H–01	30 – 8
69J–4389J–00	30 – 32
	30 – 36
6CE–44117–10	27 – 14
6CE–44118–A0	27 – 18
6JD–44120–00	27 – 20
6CE–44121–10	27 – 16
6CE–44122–20	27 – 9
6CE–44142–20	27 – 7
6JD–44150–00	34 – 19
	36 – 19
6JD–44153–00	34 – 18
	36 – 18
6JD–44153–10	34 – 18
	36 – 18
6X6–44191–10	40 – 56
	41 – 69
6CE–44194–00	29 – 30
6CE–44311–01	34 – 24
	36 – 24
6AW–44312–00	34 – 26
	34 – 31
	35 – 6
	36 – 26
	36 – 31
	37 – 6
6JD–44315–00	34 – 35
	36 – 35
	51 – 22
	51 – 35
6JD–44322–00	34 – 27
	36 – 27
	51 – 29
6JD–44323–00	34 – 34
	36 – 34
	51 – 34
6CE–44352–00	34 – 32
	36 – 32
	51 – 32
6CE–44361–00	35 – 3
	37 – 3

PART NO. CODIGO Nº	REF. NO.
6CE–44362–00	35 – 4
	37 – 4
6JD–44362–00	35 – 21
	37 – 21
6AW–44363–00	35 – 7
	37 – 7
6AW–44365–00	34 – 30
	35 – 1
	35 – 5
	36 – 30
	37 – 1
	37 – 5
	51 – 21
6AW–44366–00	32 – 45
	35 – 2
	37 – 2
	51 – 13
6AW–44367–00	35 – 20
	37 – 20
6AW–44376–00	35 – 22
	37 – 22
6P2–44391–00	24 – 25
6CE–44511–00	29 – 32
6CE–44514–00	29 – 22
6CE–44526–00	29 – 23
6G5–44526–00	28 – 4
6CE–44532–00	29 – 25
6CE–44533–00	29 – 31
6CE–44536–00	29 – 24
6CE–44551–00–CA	29 – 10
6CE–44552–00–CA	29 – 20
6CE–44555–00	29 – 14
6CE–44574–00	29 – 12
6CE–44575–00	29 – 13
6CE–45111–01–8D	32 – 25
6CB–45113–01	32 – 26
	51 – 12
6CE–45123–00	32 – 24
	51 – 11
6CE–45127–00	32 – 23
	51 – 10
6BB–45152–01	32 – 30
61A–45155–00	32 – 34
6CE–45181–01	32 – 18
6CE–45211–10–8D	32 – 44
6AW–45214–00	35 – 14
	37 – 14
6AW–45215–00	35 – 15

PART NO. CODIGO Nº	REF. NO.
6AW–45215–00	37 – 15
6AW–45244–00	34 – 51
	36 – 51
6G5–45251–02	1 – 15
	28 – 3
6JD–45300–00–8D	34 – 1
6JE–45300–00–8D	36 – 1
6JD–45300–10–8D	34 – 1
6JE–45300–10–8D	36 – 1
6JD–45301–00–8D	34 – 2
	36 – 2
69J–45318–01	32 – 32
6JD–45319–00	34 – 22
	36 – 22
6JD–45321–00	34 – 14
	36 – 14
6AW–45332–00	34 – 69
6AX–45332–00	36 – 70
6AW–45335–00–CA	34 – 38
	36 – 38
688–45341–10	34 – 8
	36 – 8
6AW–45344–00	34 – 47
	36 – 47
6CE–45373–00	1 – 19
	35 – 18
	37 – 18
6JD–45375–00	34 – 11
	36 – 11
61A–45376–00	34 – 10
	36 – 10
63P–45378–00	32 – 47
	34 – 12
	36 – 12
63P–45379–00	32 – 42
6AW–45383–00	34 – 79
	36 – 79
6AW–45384–00	34 – 80
	36 – 80
6JD–45501–00	34 – 49
	36 – 49
6JD–45501–10	34 – 49
	36 – 49
6JD–45524–00	34 – 21
	36 – 21
6T5–45539–00	34 – 50
	36 – 50
6JD–45550–00	34 – 52

NUMERICAL INDEX
INDICE NUMERICO

PART NO. CODIGO Nº	REF. NO.
6JE–45550–00	36 – 52
6JE–45560–00	36 – 55
6AW–45567–00	34 – 6
	36 – 6
6AW–45567–10	34 – 6
	36 – 6
6AW–45567–20	34 – 6
	36 – 6
6AW–45567–30	34 – 6
	36 – 6
6AW–45567–40	34 – 6
	36 – 6
6AW–45567–50	34 – 6
	36 – 6
6AW–45571–00	34 – 72
6AW–45576–00	34 – 71
	36 – 72
6AW–45577–00	34 – 73
	36 – 73
6AW–45577–10	34 – 73
	36 – 73
6AW–45577–20	34 – 73
	36 – 73
6AW–45577–30	34 – 73
	36 – 73
6AW–45577–40	34 – 73
	36 – 73
6AW–45577–50	34 – 73
	36 – 73
6AW–45577–60	34 – 73
	36 – 73
6K1–45578–01	36 – 69
6K1–45578–10	36 – 69
6K1–45578–20	36 – 69
6K1–45578–30	36 – 69
6K1–45578–40	36 – 69
6K1–45578–50	36 – 69
6K1–45578–60	36 – 69
6AW–45587–00	34 – 41
	36 – 41
6AW–45587–10	34 – 41
	36 – 41
6AW–45587–20	34 – 41
	36 – 41
6AW–45587–30	34 – 41
	36 – 41
6AW–45587–40	34 – 41
	36 – 41

PART NO. CODIGO Nº	REF. NO.
6AW–45587–50	34 – 41
	36 – 41
6AW–45587–60	34 – 41
	36 – 41
6AW–45611–00	34 – 56
6JE–45611–00	36 – 56
6AW–45612–00	34 – 68
6AW–45631–00	34 – 60
	36 – 60
6AW–45632–00	34 – 59
	36 – 59
6AW–45633–00	34 – 61
	36 – 61
61A–45634–01	34 – 58
	36 – 58
61A–45635–00	34 – 63
	36 – 63
6JD–45641–00	34 – 57
6JE–45641–00	36 – 57
6H1–45668–00	34 – 62
	36 – 62
6JD–45860–00	34 – 20
	36 – 20
6AW–45930–20	35 – 28
6AX–45930–20	37 – 28
6AW–45970–20	35 – 28
6AX–45970–20	37 – 28
6AW–45972–20	35 – 28
6AX–45972–20	37 – 28
6AW–45974–20	35 – 28
6AX–45974–20	37 – 28
6AW–45976–20	35 – 28
6AX–45976–20	37 – 28
6AW–45978–20	35 – 28
6AX–45978–20	37 – 28
6AW–45987–00	35 – 23
	37 – 23
6AW–45997–00	35 – 24
	37 – 24
6AW–45B70–20	35 – 30
6AX–45B70–20	37 – 30
6AW–45B72–20	35 – 30
6AX–45B72–20	37 – 30
6AW–45B74–20	35 – 30
6AX–45B74–20	37 – 30
6AW–45B76–20	35 – 30
6AX–45B76–20	37 – 30
6AW–45C81–10	35 – 29

PART NO. CODIGO Nº	REF. NO.
6AW–45C81–10	35 – 31
	37 – 29
	37 – 31
6X6–48118–00	40 – 35
	41 – 41
6X6–48119–04	40 – 12
6X6–48119–10	41 – 13
EL8–48127–00	40 – 11
	41 – 12
6X6–48127–01	40 – 59
	41 – 72
6X6–48128–00	40 – 60
	41 – 73
6X6–48129–01	40 – 55
	41 – 68
6X6–48144–00	40 – 54
6X6–48144–10	40 – 26
	41 – 31
704–48156–00	41 – 48
6X6–48158–00	40 – 38
	41 – 44
6X6–48167–00	40 – 16
6X6–48167–10	41 – 17
6X6–48167–20	41 – 18
6X6–48167–50	40 – 17
6X6–48167–60	41 – 19
6X6–48171–00	40 – 9
	41 – 10
6X6–48176–00	40 – 21
6X6–48176–10	41 – 24
6X6–48176–50	40 – 57
	41 – 70
6X6–48176–60	40 – 58
	41 – 71
6X6–48189–00	40 – 32
	41 – 38
6X6–48193–00	40 – 34
	41 – 40
703–48198–00	40 – 33
	41 – 39
6X6–481A0–02	40 – 24
	41 – 29
6X6–481A0–22	41 – 77
6X6–48205–61	40 – 1
6X6–48207–61	41 – 1
6X6–48207–71	41 – 1
6DV–4820A–00	27 – 1
6X6–48212–00	40 – 25

PART NO. CODIGO Nº	REF. NO.
6X6–48212–00	41 – 30
6X6–48213–00	40 – 43
	41 – 51
6X6–48215–30	40 – 13
6X6–48215–40	41 – 15
6X6–48216–00	40 – 14
6X6–48216–10	41 – 16
6X6–48219–00	40 – 18
6X6–48219–10	41 – 20
6X6–48219–20	41 – 21
6X6–48221–00	40 – 3
	41 – 3
6X6–48222–00	40 – 4
	41 – 4
6X6–48222–10	41 – 6
6X6–48224–00	40 – 5
	41 – 5
6X6–48224–10	40 – 6
	41 – 7
6X6–48225–00	41 – 25
6X6–48228–01	40 – 44
	41 – 52
6X6–48233–01	40 – 28
	41 – 34
6X6–48234–00	40 – 36
	41 – 42
6X6–48236–00	40 – 31
	41 – 37
6X6–48237–00	40 – 30
	41 – 36
6X6–48238–00	40 – 29
	41 – 35
6X6–48241–00	40 – 64
	41 – 80
6X6–48242–02	40 – 27
	41 – 32
6X6–48242–12	41 – 33
6X6–48245–01	40 – 65
	41 – 81
6X6–48264–00	40 – 39
	41 – 45
6X6–48267–00	40 – 37
	41 – 43
6X6–48267–C0	40 – 23
	41 – 28
6Y8–48277–00	42 – 16
704–48283–00	41 – 49
704–48287–00	40 – 40

PART NO. CODIGO Nº	REF. NO.
704–48287–00	41 – 46
6E5–61301–01	39 – 1
6E5–61303–00	39 – 5
6E5–61311–11	39 – 3
6E5–61313–00	39 – 2
6E5–61315–00	39 – 4
6E5–61350–02	38 – 1
6E5–61351–01	38 – 2
6E5–61355–00	38 – 5
6YD–65722–00	45 – 7
6CE–68303–00	27 – 27
6X6–81145–01	40 – 41
	41 – 75
6X6–81146–01	40 – 61
	41 – 74
6X6–81147–00	40 – 42
	41 – 50
6Y8–81315–01	42 – 17
6P2–81336–00	20 – 33
6CE–81337–01	17 – 12
6CE–81410–00	17 – 3
6CB–81443–00	22 – 6
6CB–81639–10	20 – 27
6CE–81800–01	23 – 1
6CE–81801–01	23 – 5
6CE–81807–00	23 – 8
6CB–81809–00	23 – 14
6CE–81810–00	23 – 3
67F–81813–00	23 – 6
6CE–81820–00	23 – 7
6CE–81821–00	23 – 11
6CB–81822–02	22 – 4
6CB–81823–A0	22 – 8
6CB–81826–00	23 – 22
69J–81828–00	23 – 23
6CE–81830–00	23 – 16
6CB–81832–00	23 – 9
6CB–81836–00	23 – 10
6CE–81839–00	23 – 19
67F–8183R–00	23 – 13
60V–8183T–00	23 – 17
6P2–8183X–00	20 – 18
6CE–81840–01	23 – 4
67F–81841–00	23 – 12
6CE–81842–00	23 – 18
6BR–81845–00	18 – 7
67F–81846–00	23 – 24
6CE–81850–00	23 – 2

PART NO. CODIGO Nº	REF. NO.
6CE–81869–00	23 – 21
67F–81891–00	23 – 15
6CE–81919–20	20 – 35
6Y8–81920–01	44 – 2
6Y8–81920–11	40 – 70
	41 – 87
6CB–81923–00	20 – 36
6P2–81925–01	20 – 1
6CB–81929–00	20 – 4
6C5–81941–00	23 – 20
6CB–81948–02	20 – 8
6CE–81949–00	22 – 13
6AW–81950–00	20 – 15
704–81950–10	40 – 62
	41 – 78
6CB–81952–00	21 – 34
6AW–8195A–00	20 – 22
6CE–81960–10	18 – 11
6CE–81972–00–9S	18 – 12
6CE–81975–00	18 – 13
6CE–81980–00	21 – 2
6X6–81980–00	49 – 8
6EE–81994–40	17 – 19
6EE–81994–50	17 – 20
6AH–81994–70	17 – 19
6AH–81996–00	24 – 36
6CB–82105–01	20 – 39
6P2–82113–00	20 – 30
703–82119–00	40 – 53
	41 – 67
69J–82147–00	28 – 28
6E5–82148–00	28 – 8
6H1–82148–00	28 – 6
6AW–82149–00	29 – 16
67F–82151–00	20 – 25
6CE–82151–00	20 – 21
6G1–82151–00	44 – 9
6TA–82151–00	42 – 18
67F–82151–10	20 – 26
67F–82151–40	20 – 23
67F–82151–50	20 – 24
6CE–82170–11	20 – 20
6GR–82181–00	31 – 5
6CB–82310–00	19 – 1
6CB–82314–00	19 – 3
6CB–82316–01	18 – 3
6P2–82380–00	11 – 5
6CB–82388–00	21 – 17

NUMERICAL INDEX
INDICE NUMERICO

PART NO. CODIGO Nº	REF. NO.
6Y8–82509–10	42 – 8
6X6–82510–01	48 – 3
6X6–82510–10	49 – 3
6Y8–82521–11	42 – 15
6Y8–82521–31	44 – 10
6X6–8252V–00	40 – 67
	41 – 83
6YD–82532–00	45 – 6
703–82532–00	48 – 4
	49 – 4
6X6–82540–00	40 – 63
	41 – 79
6X6–82540–10	41 – 84
6X6–82545–00	40 – 66
	41 – 82
6Y8–82553–01	44 – 1
6Y8–82553–50	40 – 69
	41 – 86
682–82556–00	48 – 6
	49 – 6
6P2–82560–01	21 – 20
6BR–82563–01	21 – 25
6X6–82563–01	40 – 2
	41 – 2
6X6–82563–40	41 – 26
6X6–82563–50	41 – 76
6X6–82570–33	48 – 1
6X6–82570–40	49 – 1
6X6–82570–60	49 – 9
6X6–82571–00	48 – 2
6X6–82571–10	49 – 2
6X6–82571–20	49 – 10
6X6–82575–10	49 – 5
688–82575–12	48 – 5
6X6–8257Y–70	41 – 64
6X6–82580–B0	41 – 57
6X6–82580–J0	40 – 49
6X6–82580–K0	41 – 57
6Y8–82582–11	40 – 52
	40 – 71
	41 – 65
	41 – 88
	44 – 4
6X6–82582–40	41 – 60
6X6–82582–60	41 – 59
6X6–82582–A0	41 – 61
6X6–82582–C0	41 – 62
6X6–82585–00	41 – 66

PART NO. CODIGO Nº	REF. NO.
6X6–82585–20	40 – 50
	41 – 58
6X6–82585–60	40 – 51
6X6–82585–70	41 – 63
69J–82587–00	21 – 27
6CE–82588–00	20 – 6
6E9–82588–00	21 – 21
6CB–82589–01	21 – 8
6X6–8258A–30	48 – 8
6X6–8258A–40	49 – 14
	49 – 14
6CE–82590–06	21 – 1
6CE–82590–15	21 – 1
703–82591–00	40 – 46
	41 – 54
703–82591–10	40 – 68
	41 – 85
6CB–82594–00	21 – 4
6X6–8259E–00	40 – 19
	41 – 22
6X6–8259E–20	49 – 12
6CE–8259M–00	22 – 12
6CE–825E0–00	43 – 1
6X6–82716–00	49 – 13
68F–82846–00	20 – 29
6X4–83383–00	42 – 5
703–83383–A0	48 – 7
	49 – 7
6X4–83386–00	42 – 6
6YD–83512–00	45 – 8
6Y9–83553–00	44 – 6
6YD–83553–00	44 – 5
6Y8–83553–01	44 – 8
6E5–83558–00	32 – 36
6YD–8356N–00	44 – 7
6DA–83614–00	21 – 29
63P–83614–01	21 – 28
6AW–83651–00	21 – 23
6AW–8366B–01	46 – 2
	46 – 11
	47 – 2
63P–8366C–00	46 – 12
	47 – 3
60V–8366D–00	46 – 3
	46 – 14
69J–83672–11	29 – 1
6YD–83710–22	45 – 1
6X6–83720–00	49 – 11

PART NO. CODIGO Nº	REF. NO.
6YD–83956–00	45 – 3
6YD–83957–00	45 – 4
6YD–83958–00	45 – 5
6X6–84301–00	40 – 15
6X6–84301–13	41 – 14
6Y8–8454G–00	42 – 11
6P2–85075–00	19 – 6
6Y8–85371–01	44 – 3
64J–85516–00	18 – 4
	20 – 9
6CB–85516–00	17 – 17
6CB–85544–00	20 – 28
689–85547–00	15 – 1
6CB–85547–00	9 – 10
6CB–85561–00	17 – 5
6CE–85564–00	27 – 6
6CB–85580–00	17 – 4
6X6–85590–31	40 – 45
	41 – 53
6CE–85592–00	17 – 8
6P2–85780–00	6 – 11
6CB–85790–00	21 – 19
63P–85886–00	21 – 31
6P2–85896–00	19 – 5
6JD–8591A–00	18 – 1
6JD–8591A–10	18 – 1
6C5–86120–00	10 – 3
6CB–86120–00	6 – 1
6Y8–86260–12	42 – 2
6AA–86261–22	42 – 3
6Y8–86267–00	42 – 1
6YD–87278–00	45 – 9
63P–8A4L0–11	47 – 1
60V–8A4L1–1A	46 – 1
63P–8A4L2–05	46 – 10
K0F–A3233–00	4 – 15
K0F–A3741–00	8 – 5
K0F–A3742–00	8 – 6
K0F–A3743–00	8 – 3
K0F–A3751–00	8 – 8
K0F–A3751–10	8 – 8
K0F–A3751–20	8 – 8
K0F–A3751–30	8 – 8
K0F–A3751–40	8 – 8
K0F–A3751–50	8 – 8
K0F–A3751–60	8 – 8
K0F–A3751–70	8 – 8
K0F–A3751–80	8 – 8

PART NO. CODIGO Nº	REF. NO.
K0F–A3751–90	8 – 8
K0F–A3751–A0	8 – 8
K0F–A3751–B0	8 – 8
K0F–A3751–C0	8 – 8
K0F–A3751–D0	8 – 8
K0F–A3751–E0	8 – 8
K0F–A3751–F0	8 – 8
K0F–A3751–G0	8 – 8
K0F–A3751–H0	8 – 8
K0F–A3751–J0	8 – 8
K0F–A3751–K0	8 – 8
K0F–A3751–L0	8 – 8
K0F–A3751–M0	8 – 8
K0F–A3751–N0	8 – 8
K0F–A3751–P0	8 – 8
K0F–A3751–R0	8 – 8
K0F–A3751–S0	8 – 8
K0F–A3751–T0	8 – 8
K0F–A3753–00	8 – 8
K0F–A3753–10	8 – 8
K0F–A3753–20	8 – 8
K0F–A3753–30	8 – 8
K0F–A3753–40	8 – 8
K0F–A3753–50	8 – 8
K0F–A3753–60	8 – 8
K0F–A3753–70	8 – 8
6CB–W0001–03	50 – 1
6JD–W0001–20	51 – 1
6JD–W0078–00	1 – 20
	51 – 27
6JD–W009A–00–9S	5 – 1
6JD–W009C–00–9S	5 – 11
6CB–W1165–00	4 – 9
6CB–W4624–00	8 – 27
6CE–W8145–01	17 – 1
6EK–W9010–00	17 – 2
90101–09M70	39 – 9
90101–12047	28 – 43
	28 – 43
90101–12M05	28 – 43
	28 – 43
90101–14004	29 – 17
90105–06035	6 – 3
	9 – 4
90105–06037	3 – 28
	3 – 45
	6 – 7
90105–06039	25 – 34

PART NO. CODIGO Nº	REF. NO.
90105–06151	3 – 18
	3 – 40
	22 – 9
90105–06M07	3 – 13
	5 – 22
90105–06M08	12 – 9
90105–08175	3 – 7
	5 – 28
90105–08178	6 – 5
90105–08220	5 – 29
90105–08M87	22 – 5
90105–10M00	35 – 19
	37 – 19
90105–14005	29 – 27
90109–06277	5 – 33
	5 – 37
90109–06M80	26 – 14
90109–06M81	46 – 4
	46 – 15
90110–08M05	30 – 83
90111–06142	26 – 4
	26 – 7
90111–06144	26 – 3
	26 – 8
90111–08078	2 – 7
90116–10067	35 – 9
	37 – 9
90119–06269	9 – 2
90119–06M17	9 – 20
	15 – 14
90119–06M18	32 – 43
90119–06M56	18 – 6
	20 – 11
90119–06M61	25 – 33
90119–06MA3	18 – 14
90119–07001	5 – 5
	5 – 15
90119–07234	5 – 6
	5 – 16
90119–08020	9 – 3
90119–08102	32 – 4
90119–08168	27 – 3
90119–08M14	34 – 37
	36 – 37
	51 – 37
90119–08M22	24 – 21
90119–08M32	34 – 17
	36 – 17

PART NO. CODIGO Nº	REF. NO.
90119–10007	32 – 27
90119–10008	35 – 12
	37 – 12
90119–10009	35 – 13
	37 – 13
90119–10024	28 – 25
	29 – 21
	29 – 33
	35 – 9
	37 – 9
90119–10050	8 – 18
90119–10M07	8 – 31
90149–11001	5 – 27
90151–05M05	3 – 33
90151–06M02	3 – 11
	3 – 20
	32 – 3
90152–05003	35 – 16
	37 – 16
90159–05059	43 – 3
90159–06053	26 – 11
90167–06M00	42 – 12
90170–09M05	39 – 10
90170–14M06	39 – 6
90170–30M18	34 – 45
	36 – 45
90171–18M04	35 – 26
	37 – 26
90173–06001	26 – 9
90179–06M28	5 – 41
90179–08003	22 – 2
90179–18009	34 – 54
	36 – 54
90183–02M03	34 – 65
	36 – 65
90183–061A6	26 – 10
90185–05002	35 – 17
	37 – 17
90185–06M07	5 – 45
	27 – 12
90185–09M01	38 – 6
	39 – 11
90185–14M00	29 – 18
	29 – 28
90185–22M11	28 – 21
90201–02M00	34 – 64
	36 – 64
90201–06068	27 – 11

NUMERICAL INDEX
INDICE NUMERICO

PART NO. CODIGO Nº	REF. NO.
90201–06M02	32 – 40
90201–06M30	42 – 13
90201–10M01	8 – 32
90201–10M20	38 – 7
90201–10M76	39 – 8
90201–11008	27 – 24
90201–12064	27 – 4
90201–12426	28 – 45
90201–13M01	28 – 44
90201–156J2	24 – 11
90201–16032	29 – 15
90201–18023	34 – 53
	36 – 53
90201–186F1	5 – 8
	5 – 18
90201–19M01	35 – 25
	37 – 25
90201–26M59	28 – 20
90201–301U7	34 – 43
	36 – 43
90201–35015	34 – 55
90201–40M00	29 – 6
90201–68008	34 – 40
	36 – 40
90202–08M41	27 – 10
90202–40M47	29 – 9
90206–15M18	24 – 12
90214–30003	34 – 44
	36 – 44
90249–06M19	28 – 35
90280–04002	34 – 33
	36 – 33
	51 – 33
90282–05008	34 – 78
	36 – 78
90340–08002	34 – 7
	36 – 7
90340–14M06	5 – 9
	33 – 4
90340–18M09	5 – 7
	5 – 17
90386–08008	27 – 2
90386–10001	27 – 25
90386–10M16	28 – 33
90386–11001	27 – 22
90386–15M73	24 – 10
90386–18M14	28 – 41
	30 – 24

PART NO. CODIGO Nº	REF. NO.
90386–18M63	28 – 40
90386–25M31	28 – 19
90386–39M89	29 – 7
90387–05004	43 – 4
90387–06285	17 – 14
90387–06289	9 – 19
	15 – 16
90387–06M03	25 – 32
90387–06M43	26 – 13
90387–07028	26 – 6
90387–08104	27 – 5
90387–08M37	24 – 20
90387–08M45	2 – 10
90387–10094	2 – 8
90387–10M05	28 – 36
90387–10M61	38 – 3
90387–11005	5 – 26
90387–28013	29 – 26
90401–19001	3 – 37
90430–06M03	5 – 23
90430–08003	1 – 18
	34 – 9
	36 – 9
	51 – 14
90430–14115	5 – 10
	46 – 13
	47 – 4
90430–14M09	1 – 17
	33 – 5
	51 – 2
90445–07017	46 – 6
	46 – 17
90445–07032	32 – 38
90445–09068	18 – 29
90445–09220	7 – 1
90445–096H2	7 – 10
90445–097F7	10 – 9
90445–107A5	18 – 19
90445–13M01	16 – 2
90445–14019	25 – 23
90445–14021	25 – 14
90445–16015	25 – 16
90446–15003	20 – 19
	29 – 34
90447–07013	46 – 7
	46 – 18
90462–06013	18 – 21
90462–10061	32 – 41

PART NO. CODIGO Nº	REF. NO.
90464–06001	21 – 6
90464–07209	10 – 20
90464–07M20	10 – 35
90464–08004	11 – 9
90464–09013	7 – 5
	10 – 15
90464–09129	21 – 33
90464–10011	10 – 34
90464–10M59	7 – 4
90464–11012	10 – 32
90464–11121	21 – 13
90464–12009	14 – 14
90464–12010	7 – 6
	10 – 13
	10 – 33
90464–12012	14 – 15
	14 – 16
	15 – 5
90464–12183	20 – 13
	21 – 15
90464–13227	22 – 10
90464–13249	9 – 21
	18 – 9
	20 – 12
90464–16001	21 – 24
	25 – 28
90464–18004	22 – 11
90464–18246	21 – 14
90464–20181	9 – 22
	10 – 19
	18 – 10
	20 – 14
	21 – 3
	21 – 16
90464–20258	24 – 33
90464–23001	10 – 6
90464–26002	7 – 9
	10 – 14
	18 – 23
90464–99004	9 – 12
90465–08M83	28 – 16
	28 – 23
90465–11M10	7 – 7
	7 – 11
	10 – 7
	10 – 12
	15 – 6
	15 – 19

PART NO. CODIGO Nº	REF. NO.
90465–11M10	17 – 9
	18 – 31
	18 – 32
	18 – 33
	25 – 3
	25 – 24
	28 – 22
	29 – 35
	32 – 37
	42 – 10
	43 – 5
	46 – 5
	46 – 16
90465–11M59	7 – 16
90465–13M18	43 – 6
90465–13M24	21 – 7
90465–14M66	7 – 17
	14 – 13
90467–08004	18 – 34
90467–08M18	18 – 20
90467–090A0	10 – 11
90467–130A5	25 – 25
90467–140A8	25 – 26
90467–140A9	25 – 27
90468–18008	27 – 13
	27 – 17
90480–06M19	16 – 4
90480–10M23	9 – 18
	15 – 15
90480–12314	17 – 16
	19 – 4
90480–13M24	26 – 12
90480–14029	25 – 31
90480–15M31	17 – 15
90480–16009	26 – 5
90480–22M81	24 – 19
90501–10M77	34 – 66
	36 – 66
90501–127J4	34 – 23
	36 – 23
90506–16003	28 – 38
90506–22001	24 – 16
90560–12M01	38 – 4
91318–05025	30 – 59
91318–05040	30 – 64
91490–40030	35 – 27
	37 – 27
91690–30020	28 – 37

PART NO. CODIGO Nº	REF. NO.
91690–40010	3 – 16
91809–08006	5 – 4
	5 – 14
92990–05200	40 – 20
	41 – 23
92990–05300	40 – 8
	41 – 9
92990–06100	2 – 14
92990–06200	2 – 5
92990–08600	2 – 9
	40 – 10
	41 – 11
92995–10600	35 – 10
	37 – 10
92995–14600	29 – 19
	29 – 29
93101–12M70	34 – 16
	36 – 16
	51 – 17
93101–28019	34 – 39
	36 – 39
	51 – 23
93101–35019	34 – 76
	36 – 76
	51 – 25
93102–38008	8 – 26
	50 – 11
93102–85008	4 – 4
	50 – 10
93104–22M07	34 – 25
	36 – 25
	51 – 18
	51 – 28
93106–19N50	30 – 5
93210–04279	42 – 9
93210–064A5	30 – 51
93210–07003	32 – 48
	34 – 13
	36 – 13
	51 – 15
93210–08391	30 – 48
93210–09165	27 – 21
	30 – 72
93210–16275	38 – 9
93210–17239	30 – 22
93210–19MJ3	33 – 20
	51 – 4
93210–24M79	3 – 42

PART NO. CODIGO Nº	REF. NO.
93210–24M79	50 – 17
93210–26658	3 – 8
	33 – 15
	50 – 6
	50 – 14
93210–27370	3 – 44
	50 – 18
93210–35321	29 – 8
93210–37160	34 – 29
	36 – 29
	51 – 20
	51 – 31
93210–58144	34 – 15
	36 – 15
	51 – 16
93210–66001	30 – 69
93210–69MG6	34 – 46
	36 – 46
	51 – 24
93210–94003	34 – 28
	36 – 28
	51 – 19
	51 – 30
93211–10232	34 – 77
	36 – 77
	51 – 26
93306–21101	34 – 70
93311–63591	34 – 74
	36 – 74
93311–93590	34 – 3
	36 – 3
93332–000A2	36 – 71
93340–67011	34 – 4
	36 – 4
93341–440U5	36 – 68
93390–00031	34 – 5
	36 – 5
93399–99962	34 – 42
	36 – 42
93410–10082	27 – 26
93410–18M05	28 – 42
93410–37M04	29 – 11
93420–36M01	32 – 33
93501–04011	34 – 67
	36 – 67
93501–08001	30 – 47
93503–16003	30 – 37
93505–32038	30 – 13

NUMERICAL INDEX
INDICE NUMERICO

PART NO. CODIGO Nº	REF. NO.
93505–32038	30 – 34
93604–07M13	27 – 19
93604–35236	30 – 60
93605–10108	8 – 10
	8 – 12
	8 – 14
	8 – 16
93606–12019	3 – 3
	3 – 4
	4 – 3
	34 – 36
	36 – 36
	51 – 36
93606–19002	28 – 2
93606–19M23	32 – 22
93608–16M16	32 – 7
	32 – 28
	32 – 46
	33 – 3
	35 – 8
	37 – 8
93700–06002	28 – 15
	28 – 27
94702–00400	1 – 8
	5 – 46
95022–06035	17 – 10
95023–06012	18 – 22
95027–06025	3 – 27
95380–05600	40 – 48
	41 – 56
95380–06600	2 – 15
	10 – 4
95380–10600	35 – 11
	37 – 11
95380–12600	28 – 46
95380–14700	39 – 7
95780–06300	42 – 14
95780–08300	2 – 11
95780–10300	29 – 4
95812–06025	33 – 8
95814–08020	20 – 3
95895–06016	33 – 21
95D75–06025	27 – 23
	27 – 28
95D75–06040	33 – 14
95D75–08030	9 – 1
95D75–08060	11 – 4
95D95–06010	32 – 35

PART NO. CODIGO Nº	REF. NO.
95D95–06012	18 – 8
	21 – 5
	21 – 22
	21 – 30
	24 – 18
	24 – 27
	24 – 29
	24 – 31
95D95–06014	5 – 39
	15 – 21
	24 – 4
95D95–06016	6 – 9
	10 – 17
	15 – 17
	20 – 7
	21 – 18
	21 – 35
	22 – 7
	25 – 12
95D95–06020	9 – 13
	17 – 13
	18 – 2
	20 – 5
	21 – 12
	32 – 10
95D95–06025	18 – 15
	19 – 2
95D95–06030	5 – 32
	5 – 36
	17 – 11
95D95–08012	24 – 15
95D95–08016	20 – 2
	20 – 37
	20 – 38
95D95–08025	5 – 24
97513–06520	20 – 17
97513–08545	22 – 1
97595–05520	17 – 7
97602–04310	31 – 8
97780–50145	40 – 47
	41 – 55
97780–50620	20 – 32
97780–60516	2 – 4
97780–60520	25 – 22
97780–60620	42 – 7
97880–06035	42 – 12
97885–06010	28 – 11
	28 – 14

PART NO. CODIGO Nº	REF. NO.
97980–06216	42 – 4
97985–04308	22 – 3
97985–06212	28 – 9
	28 – 17
97985–06216	29 – 2
97D95–06010	28 – 30
	32 – 39
97D95–06012	32 – 31
97E75–06525	27 – 15
97E75–06620	11 – 6
97E75–08535	32 – 21
	33 – 2
97E75–08560	32 – 15
97E75–10535	32 – 6
97E75–10545	32 – 5
97E75–10570	35 – 13
	37 – 13
97E95–06510	28 – 7
97E95–06514	28 – 24
97E95–06516	9 – 17
	20 – 34
	43 – 2
	46 – 9
	46 – 20
97E95–06520	19 – 7
97E95–06525	28 – 5
97E95–06610	20 – 16
97E95–08520	34 – 48
	36 – 48
98507–04008	13 – 39
98580–04010	40 – 22
	41 – 27
98580–05014	40 – 7
	41 – 8
98580–05025	41 – 47
98580–05060	40 – 47
	41 – 55
98780–06530	3 – 31
98780–06550	3 – 35
99002–03600	30 – 40
99009–47500	34 – 75
	36 – 75
99530–08012	17 – 6
99530–14016	8 – 30

PART NO. CODIGO Nº	REF. NO.

PART NO. CODIGO Nº	REF. NO.

PART NO. CODIGO Nº	REF. NO.