YAMAHA

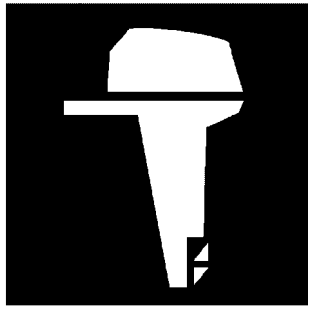

PARTS CATALOGUE
CATALOGO DE REPUESTOS

FT50CET'18 (61SH)
FT50CEHD'18 (61SH)

YAMAHA
GENUINE
Parts & Accessories

1S61S-200SA

( )

FT50CET/FT50CEHD
PARTS CATALOGUE
©2018 by Yamaha Motor Co., Ltd.
1st edition, June 2018
All rights reserved.
Any reprinting or unauthorized use
without the written permission of
Yamaha Motor Co., Ltd.
is expressly prohibited.
Printed in Japan.

FT50CET/FT50CEHD
CATALOGO DE REPUESTOS
©2018 por Yamaha Motor Co., Ltd.
1ª edición, junio 2018
Todos los derechos reservados.
Toda reproducción o uso no autorizado
sin el consentimiento escrito de
Yamaha Motor Co., Ltd.
quedan expresamente prohibidos
Impreso en Japón.

FOREWORD

This Parts Catalogue is related to the parts for the model(s) on the cover page. When you are ordering replacement parts, please refer to this Parts Catalogue and quote both part numbers and part names correctly.

1. Modifications or additions which have been made after the issue of the Parts Catalogue will be announced in the Parts News.
   It is advisable that you make the necessary corrections to the Parts Catalogue according to the Parts News.

2. Abbreviations
   The following abbreviations are used in this Parts Catalogue.
   "UR" Use specified parts number.
   "UN" Use as many as needed.
   "AP" Alternate Parts
   "LM" Locally Made (Parts need to be ordered locally)
   "F#" Frame No. (Applicable machine No.)
   "O/S" Over Size

3. The number of components for assembly
   - Parts, which are to be supplied in an assembly, are listed with a dot (.) in front of the part name as shown below.
   - The numeral appearing to the right of each component part indicates the quantity of parts for each assembly unit.

PART NO.	DESCRIPTION	Q'TY	REMARKS
2F5–83310–60	FRONT FLASHER LIGHT ASSY	2	
115–83311–60	.BULB (6V–18W)	1	

4. Applicable colours of graphics are represented in the "REMARKS" as shown below.

PART NO.	DESCRIPTION	Q'TY	REMARKS
2N4–24110–00–X5	FUEL TANK COMP.	2	MXR
3J1–24240–10	.GRAPHIC, FUEL TANK	1	FOR MXR

5. Note that the illustrations for reference in finding parts numbers are not to be used for assembling. When assembling, please use the applicable service manual.

6. The asterisk (*) before a reference number indicates modified items after the first edition.

7. Applicable Serial No.
   Engine Serial No.

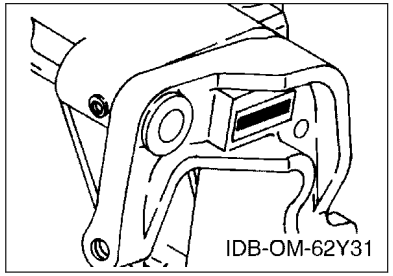

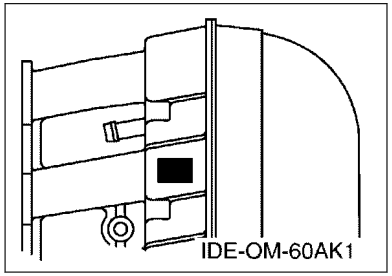

8. Applicable Engine Starting Serial No.

Model	Serial No.	Model	Serial No.
FT50C	64J-1020776		

9. Applicable Colour Code

Abbreviation	Colour Name	Colour Code
DBN1	DARK BLUISH GRAY 1	008D

10. Quantity Column Information

Column No.	Name Of Q'ty Column	Applicable Model
1	EHD	FT50CEHD
2	ET	FT50CET

PROLOGO

Este catálogo de repuestos corresponde a las piezas para el o los modelos que figuran en la página de portada. Al formular el pedido de repuestos, se ruega citar este catálogo y especificar correctamente el número y el nombre de las piezas.

1. Las modificaciones y agregados que se hayan realizado después de la edición de este Catálogo de Repuestos, serán anunciados en las Informaciones de Recambios.
   Es recomendable que se hagan las correcciones necesarias en el Catálogo de Repuestos de acuerdo con las Informaciones de Recambios.

2. Abreviaciones
   En este. Catálogo de Repuestos se emplean las siguientes abreviaciones.
   "UR" Usar el número de partes especificado
   "UN" Usar la cantidad necesaria
   "AP" Piezas sustitutivas
   "LM" Fabricación local (Hay que pedir los repuestos en las cercanías)
   "F#" Nº de bastidor (Nº aplicable a la máquina)
   "O/S" Sobredimensionado

3. La cantidad de componentes para el montaje
   - Los componentes, suministrados como conjunto, se describen con un punto (.) que precede al nombre del parte como se indica a continuación.
   - La numeración que aparece a la derecha de cada descripción indica la cantidad de partes por cada unidad de conjunto.

CODIGO Nº	DESCRIPCION	CANT.	OBSERVACIONES
2F5–83310–60	ENSAMBLAJE DE LA LUZ	2	
115–83311–60	.BOMBILLA (6V–18W)	1	

4. Los colores de los componentes se indican como sigue en la columna de "OBSERVACIONES".

CODIGO Nº	DESCRIPCION	CANT.	OBSERVACIONES
2N4–24110–00–X5	COMP. DEL TANQUE	2	MXR
3J1–24240–10	.GRAFICO, DEL TANQUE	1	PARA MXR

5. Debe tenerse en cuenta que las ilustraciones sirven como guia para la búsqueda de los números de partes y no deben usarse para el montaje. Durante el montaje, se recomienda usar el manual de taller correspondiente.

6. EL asterisco (*) antes del número de referencia indica los elementos modificados después de la primera edición.

7. Números de serie
   Nº de Serie del motor

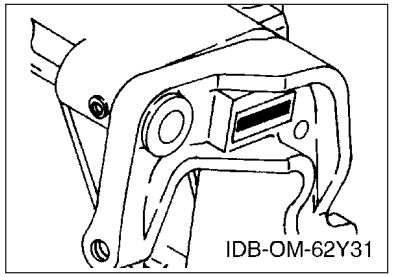

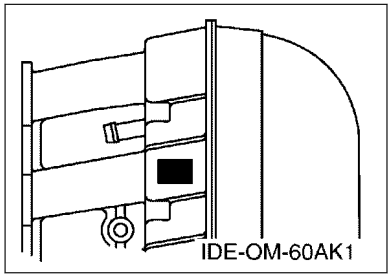

8. Números de serie del motor

Modelo	Nº de serie	Modelo	Nº de serie
FT50C	64J-1020776		

9. Códigos de color aplicables

Abreviatura	Nombre de color	Código de color
DBN1	DARK BLUISH GRAY 1	008D

10. Informacion para la columna de cantidades

Columna Nº	Nombre de la columna de cantidades	Modelo aplicable
1	EHD	FT50CEHD
2	ET	FT50CET

CONTENTS

SCHEDULED SERVICE PARTS.....1
TOP COWLING.....2
CYLINDER & CRANKCASE 1.....3
CRANKSHAFT & PISTON.....5
CYLINDER & CRANKCASE 2.....6
VALVE.....7
INTAKE.....8
CARBURETOR.....10
OIL PUMP.....12
FUEL.....13
GENERATOR.....15
ELECTRICAL 1.....16
ELECTRICAL 2.....17
ELECTRICAL 3.....19
ELECTRICAL 4.....20
STARTING MOTOR.....21
BOTTOM COWLING.....22
STEERING.....24
STEERING FRICTION.....27
CONTROL.....28
BRACKET 1.....30
BRACKET 2.....32
BRACKET 3.....34
POWER TRIM & TILT ASSY 1.....36
POWER TRIM & TILT ASSY 2.....39
UPPER CASING.....40
OIL PAN.....42
LOWER CASING & DRIVE 1.....43
LOWER CASING & DRIVE 2.....46
FUEL TANK.....48
STEERING GUIDE.....49
REMOTE CONTROL BOX.....50
REMOTE CONTROL ASSY.....51
METER.....54
REPAIR KIT 1.....55
REPAIR KIT 2.....56
REPAIR KIT 3.....57

INDEX

NUMERICAL INDEX.....59

CONTENIDO

PARTES DE REPUESTO TEMPORALES..... 1
SOPORTE SUPERIOR..... 2
CILINDRO & CARTER 1..... 3
CIGUENAL & PISTON.....5
CILINDRO & CARTER 2..... 6
VALVULA.....7
ADMISION.....8
CARBURADOR..... 10
BOMBA DE ACEITE.....12
COMBUSTIBLE..... 13
GENERADOR.....15
EQUIPO ELECTRICO 1..... 16
EQUIPO ELECTRICO 2..... 17
EQUIPO ELECTRICO 3..... 19
EQUIPO ELECTRICO 4..... 20
MOTOR DE ARRANQUE..... 21
CUBIERTA INFERIOR..... 22
DIRECCION.....24
FRICCION DE DIRECCION..... 27
CONTROL..... 28
SOPORTE 1..... 30
SOPORTE 2..... 32
SOPORTE 3..... 34
COMPONER Y PODER VARILLA 1.....36
COMPONER Y PODER VARILLA 2.....39
FUNDA SUPERIOR.....40
OIL PAN.....42
IMPULSOR E INFERIOR 1..... 43
IMPULSOR E INFERIOR 2..... 46
DEPOSITO DE COMBUSTIBLE..... 48
DIRECCIONGUIAR..... 49
CONTROL REMOTO COMPLETO..... 50
CONTROL REMOTO COMPL.....51
MEDIDOR.....54
ESTUCHE REPARATION 1..... 55
ESTUCHE REPARATION 2..... 56
ESTUCHE REPARATION 3..... 57

INDICE

INDICE NUMERICO.....59

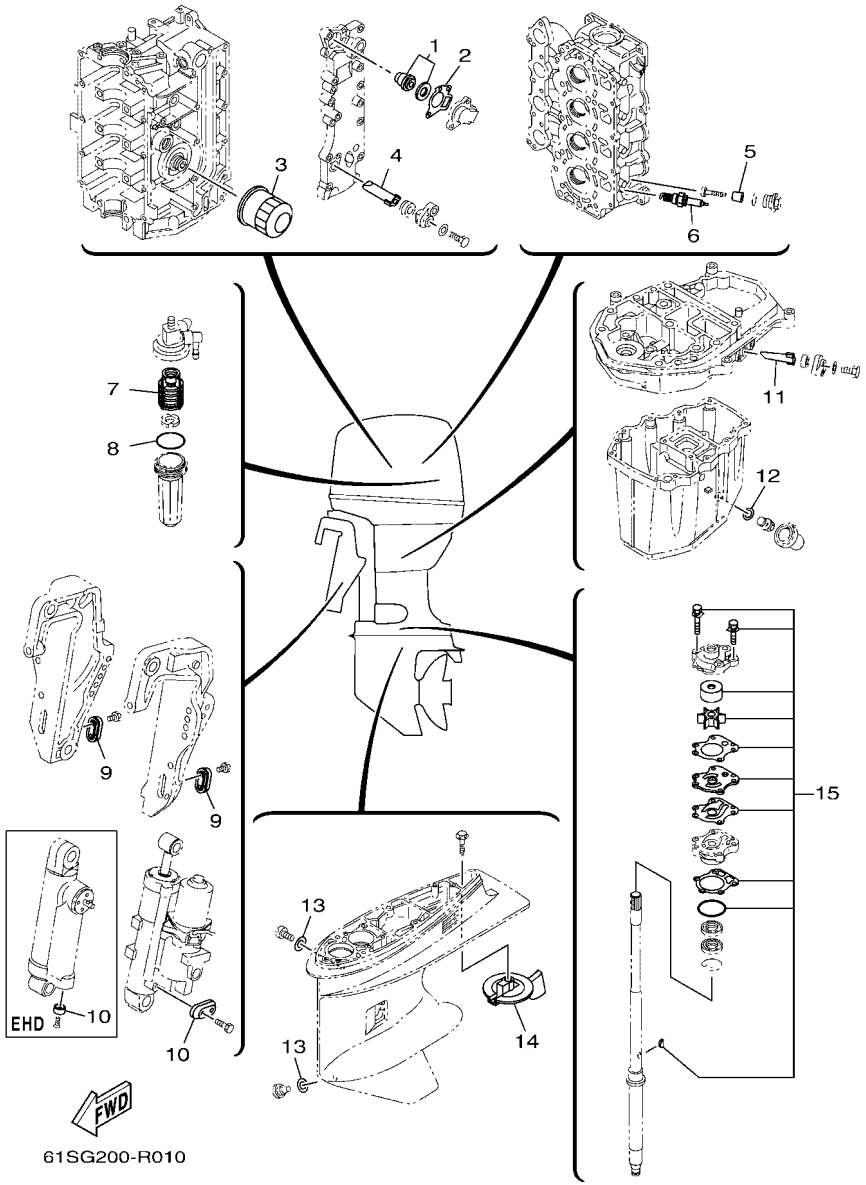

FIG. 1 SCHEDULED SERVICE PARTS — PARTES DE REPUESTO TEMPORALES

REF. NO.	PART NO. CODIGO Nº	DESCRIPTION DESCRIPCION	EHD	ET				REMARKS OBSERVACIONES
1	6G8–12411–03	THERMOSTAT TERMOSTAT	1	1				
2	62Y–12414–00	GASKET, COVER EMPAQUE	1	1				
3	5GH–13440–60	ELEMENT ASSY, OIL CLEANER ELEMENTO FILTRO DE ACEITE	1	1				
4	62Y–11325–00	ANODE ANODO	1	1				
5	6G8–11325–00	ANODE ANODO	4	4				
6	94701–00375	PLUG, SPARK (NGK DPR6EA-9) BUJIA (NGK DPR6EA-9)	4	4				
7	61N–24563–10	ELEMENT, FILTER ELEMENTO DEL FILTRO	1	1				
8	93210–32738	O-RING ANILLO O	1	1				
9	65W–45251–00	ANODE CATODE	2	2				
10	663–45251–00	ANODE CATODE	1					
	65W–45251–00	ANODE CATODE		1				
11	62Y–11325–00	ANODE ANODO	1	1				
12	90430–14M09	GASKET JUNTA	1	1				
13	90430–08003	GASKET JUNTA	2	2				
14	67F–45371–00	TAB-TRIM QUILLA ESTABILIZADOR	1	1				
15	6H3–W0078–02	WATER PUMP REPAIR KIT ESTUCHE REPARACION BOMBA AGUA	1	1				

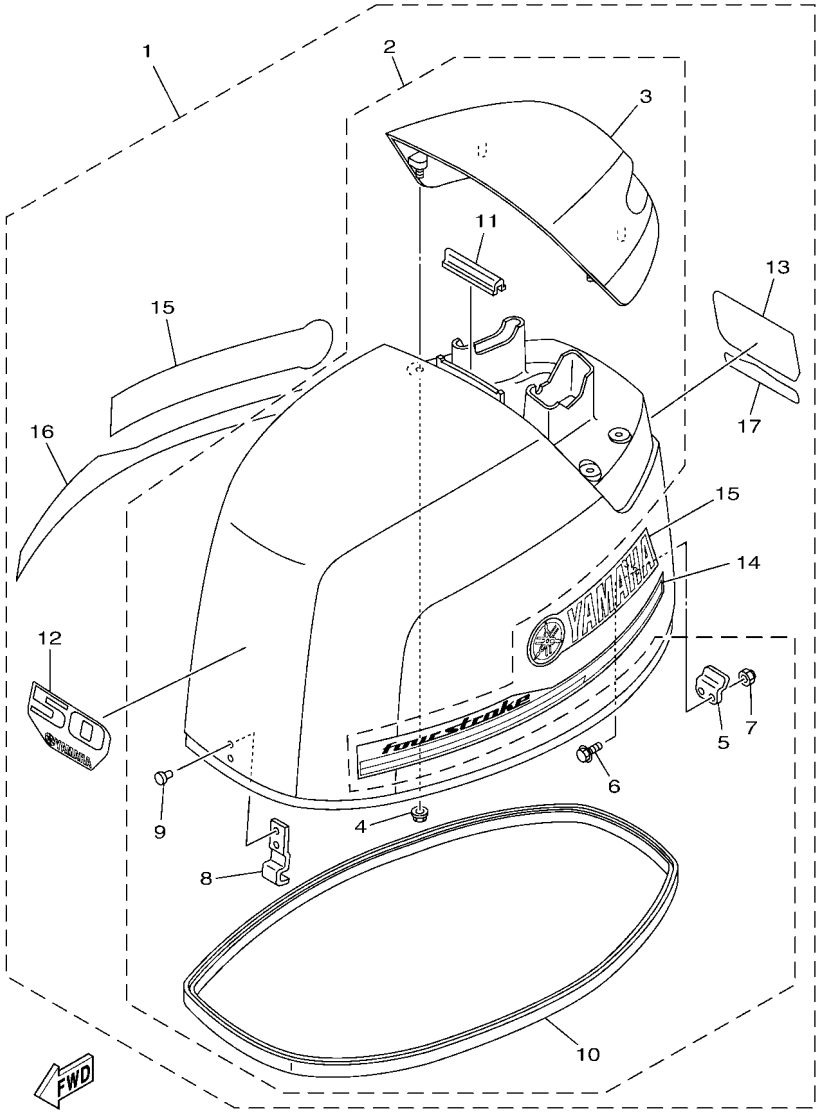

FIG. 2 TOP COWLING — SOPORTE SUPERIOR

REF. NO.	PART NO. CODIGO Nº	DESCRIPTION DESCRIPCION	EHD	ET				REMARKS OBSERVACIONES
1	61S–42610–20	TOP COWLING ASSY SOPORTE SUPERIOR COMPL.	1	1				
2	62Y–4261A–00	.TOP COWLING W/O GRAPHICS .SOPORTE SUPERIOR SIN GRAFICOS	1	1				
3	62Y–42613–01–8D	..MOLDING, AIR DUCT ..MOLDURA CONDUCTO AIRE	1	1				
4	90179–06M24	..NUT ..TUERCA	4	4				
5	62Y–42652–00	..HOOK ..GANCHO	1	1				
6	97595–05516	..BOLT, WITH WASHER ..PERNO CON ARANDELA	2	2				
7	95780–05300	..NUT, NYLON ..TUERCA	2	2				
8	62Y–42651–00	..HOOK ..GANCHO	1	1				
9	90266–06M02	..RIVET ..REMACHE	2	2				
10	62Y–42615–00	..SEAL ..SELLO	1	1				
11	61N–42628–00	..SEAL ..SELLO DE GOMA	1	1				
12	60A–42677–10	.GRAPHIC, FRONT .CALCAMONIA FRONTAL	1	1				
13	61S–42678–20	.GRAPHIC, REAR .CALCAMONIA TRASERA	1	1				
14	60A–42675–00	.GRAPHIC, SIDE 1 .CALCAMONIA LATERAL 1	1	1				
15	60A–42681–00	.MARK, COWLING .MARCA DE CUBIERTA	2	2				
16	60A–42676–00	.GRAPHIC, SIDE 2 .CALCAMONIA LATERAL 2	1	1				
17	6AJ–4267A–00	.GRAPHIC, REAR 2 .CALCAMONIA TRASERA 2	1	1				

FIG. 3 CYLINDER & CRANKCASE 1 — CILINDRO & CARTER 1

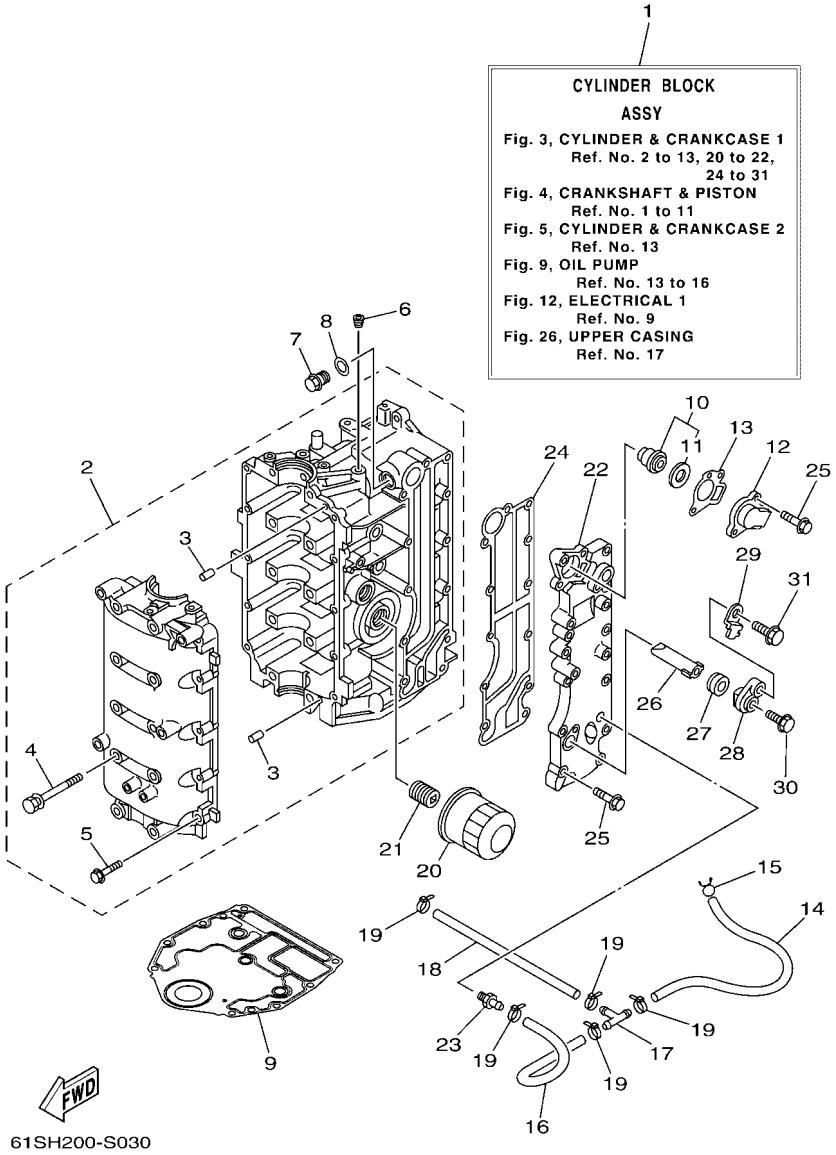

REF. NO.	PART NO. CODIGO Nº	DESCRIPTION DESCRIPCION	EHD	ET				REMARKS OBSERVACIONES
1	60A–W009B–03–9S	CYLINDER BLOCK ASSY CYLINDRO BLOQUE COMPLETO	1	1				
2	64J–15100–01	CRANKCASE ASSY CARTER COMPLETO	1	1				
3	93606–12019	.PIN, DOWEL .PASADOR DE CLAVIJA	4	4				
4	90119–08154	.BOLT, WITH WASHER .TORNILLO CON ARANDELA	10	10				
5	97513–06535	.BOLT, WITH WASHER .PERNO CON ARANDELA	10	10				
6	90344–51003	PLUG, TAPER SCREW TAPON DE TORNILLO AHUSADO	1	1				
7	90340–14M06	PLUG, STRAIGHT SCREW TORNILLO, DE DRENAJE	1	1				
8	90430–14115	GASKET JUNTA	1	1				
9	6BG–11351–00	GASKET, CYLINDER JUNTA, DE CILINDRO	1	1				
10	6G8–12411–03	THERMOSTAT TERMOSTAT	1	1				
11	688–12412–00	.SEAL, THERMOSTAT .SELLO TERMOSTATO	1	1				
12	6H3–12413–00–9S	COVER, THERMOSTAT CUBIERTA TERMOSTATO	1	1				
13	62Y–12414–00	GASKET, COVER EMPAQUE	1	1				
14	90445–09104	HOSE (L300) TUBO (L300)	1	1				
15	90467–08M18	CLIP PRESILLA	1	1				
16	90445–09068	HOSE (L110) TUBO (L110)	1	1				
17	688–24378–00	PIPE, JOINT 3 TUBO DE UNION 3	1	1				
18	90445–09095	HOSE (L215) TUBO (L215)	1	1				
19	90465–11M10	CLAMP BRIDA	5	5				
20	5GH–13440–60	ELEMENT ASSY, OIL CLEANER ELEMENTO FILTRO DE ACEITE	1	1				
21	6C5–12858–00	BOLT, UNION PERNO DE UNION	1	1				
22	62Y–41113–30–9S	OUTER COVER, EXHAUST CUBOERTA EXTERIOR DE ESCAPE	1	1				
23	62Y–12481–10	PIPE 1 TUBO 1	1	1				
24	6C5–41114–00	GASKET, EXHAUST OUTER COVER EMPAQUE	1	1				
25	90119–06MA5	BOLT, WITH WASHER TORNILLO CON ARANDELA	12	12				
26	62Y–11325–00	ANODE ANODO	1	1				
27	66M–11328–00	GROMMET, ANODE TAPON	1	1				

FIG. 3 CYLINDER & CRANKCASE 1 — CILINDRO & CARTER 1

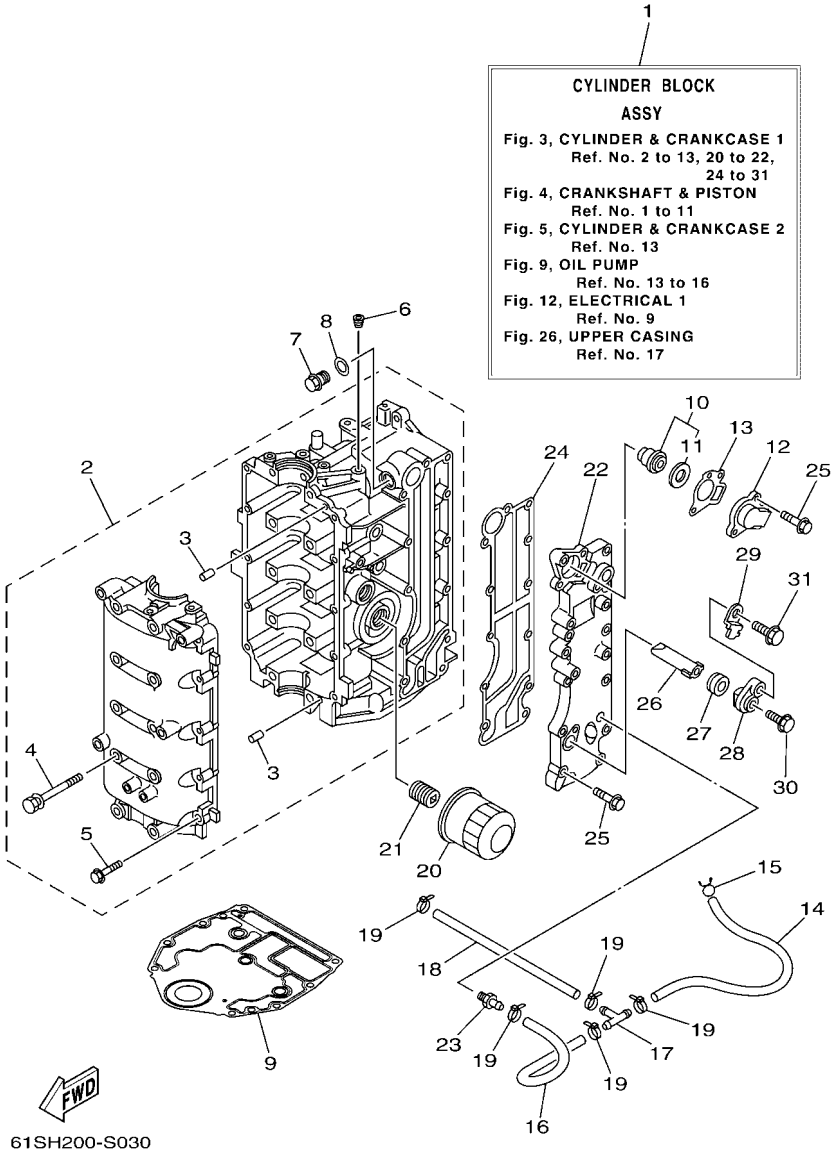

REF. NO.	PART NO. CODIGO Nº	DESCRIPTION DESCRIPCION	EHD	ET				REMARKS OBSERVACIONES
28	66M–11327–00–94	COVER, ANODE CUBIERTA DE ANODO	1	1				
29	66M–12535–00	PLATE EMPAQUETADURA	1	1				
30	97595–05512	BOLT, WITH WASHER PERNO CON ARANDELA	1	1				
31	97595–06520	BOLT, WITH WASHER PERNO CON ARANDELA	1	1				

FIG. 4 CRANKSHAFT & PISTON — CIGUENAL & PISTON

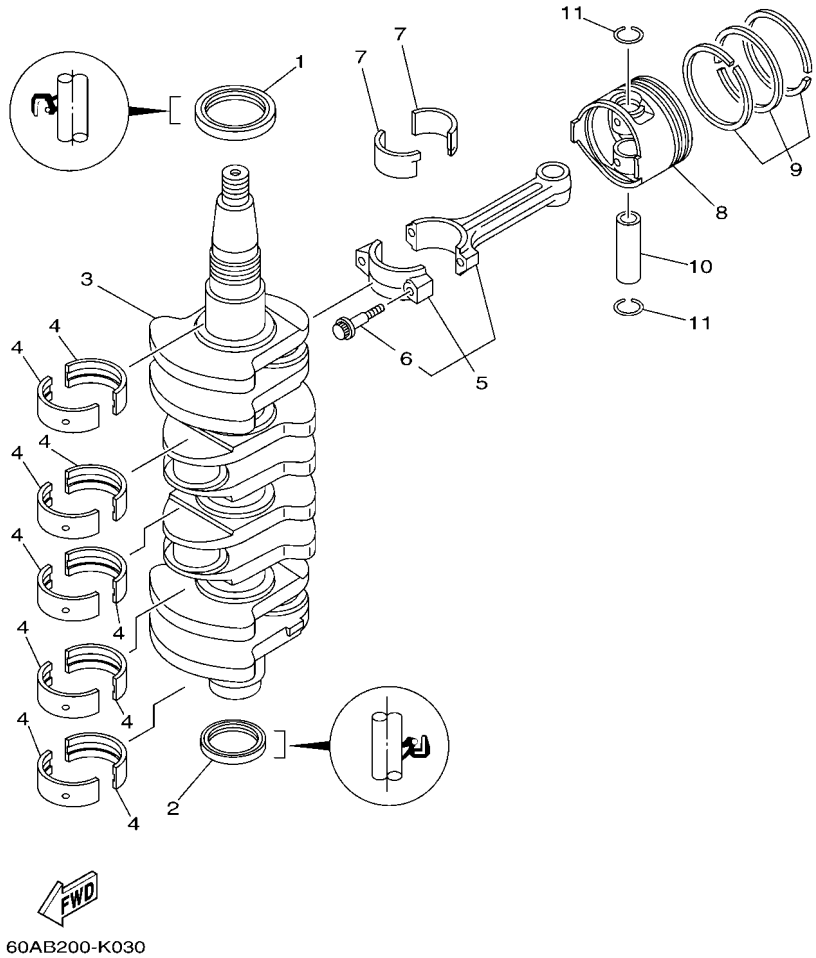

REF. NO.	PART NO. CODIGO Nº	DESCRIPTION DESCRIPCION	EHD	ET				REMARKS OBSERVACIONES
1	93102–43M42	OIL SEAL SELLO ACEITE	1	1				
2	93101–35002	OIL SEAL SELLO ACEITE	1	1				
3	69W–11411–10	CRANKSHAFT CIGUENAL	1	1				
4	6BG–11416–00	PLANE BEARING, CRANKSHAFT 1 COJINETE PLANO 1	10	10				UR YELLOW UR YELLOW
	6BG–11416–10	PLANE BEARING, CRANKSHAFT 1 COJINETE PLANO 1	10	10				UR RED UR RED
	6BG–11416–20	PLANE BEARING, CRANKSHAFT 1 COJINETE PLANO 1	10	10				UR PINK UR PINK
	6BG–11416–30	PLANE BEARING, CRANKSHAFT 1 COJINETE PLANO 1	10	10				UR GREEN UR GREEN
5	6C5–11650–10	CONNECTING ROD ASSY BIELA COMPLETA	4	4				
6	6C5–11654–00	.BOLT, CONNECTING ROD .TORNILLO DE BIELA	2	2				
7	6CJ–11656–00	PLANE BEARING, CONNECTING ROD COJINETE PLANO	8	8				UR YELLOW UR YELLOW
	6CJ–11656–10	PLANE BEARING, CONNECTING ROD COJINETE PLANO	8	8				UR RED UR RED
	6CJ–11656–20	PLANE BEARING, CONNECTING ROD COJINETE PLANO	8	8				UR PINK UR PINK
	6CJ–11656–30	PLANE BEARING, CONNECTING ROD COJINETE PLANO	8	8				UR GREEN UR GREEN
8	62Y–11631–10–96	PISTON (STD) PISTON (NORMA)	4	4				
	62Y–11635–10	PISTON (0.25MM O/S) PISTON (0.25MM O/S)	4	4				AP AP
	62Y–11636–10	PISTON (0.50MM O/S) PISTON (0.50MM O/S)	4	4				AP AP
9	64J–11603–01	PISTON RING SET (STD) JUEGO DE ANILLOS (NORMA)	4	4				
	64J–11604–01	PISTON RING SET (0.25MM O/S) JUEGO DE ANILLOS (0.25MM O/S)	4	4				AP AP
	64J–11605–01	PISTON RING SET (0.50MM O/S) JUEGO DE ANILLOS (0.50MM O/S)	4	4				AP AP
10	62Y–11633–00	PIN, PISTON PASADOR, PISTON	4	4				
11	93450–17129	CIRCLIP SEGURO	8	8				

FIG. 5 CYLINDER & CRANKCASE 2 — CILINDRO & CARTER 2

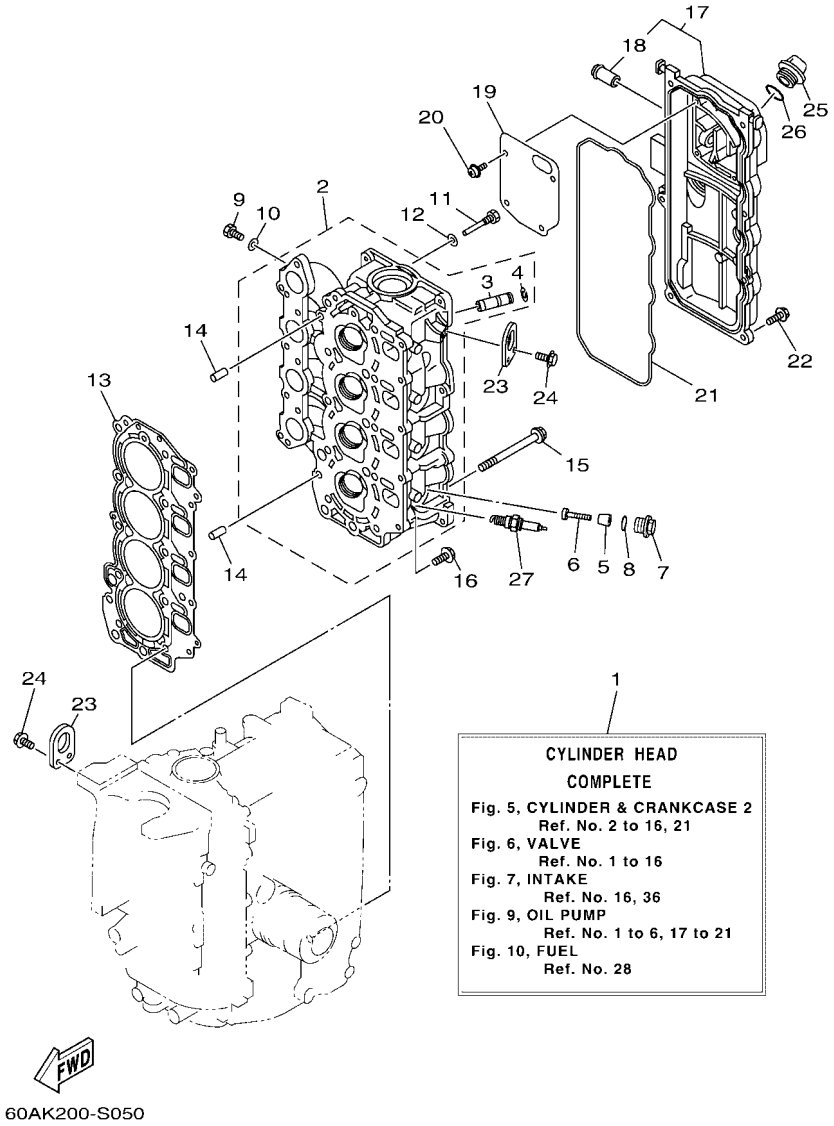

60AK200-S050

REF. NO.	PART NO. CODIGO Nº	DESCRIPTION DESCRIPCION	EHD	ET				REMARKS OBSERVACIONES
1	64J–W009A–04–9S	CYLINDER HEAD COMPLETE CILINDRD CULATA COMPLETO	1	1				
2	64J–11111–10–9S	HEAD, CYLINDER 1 CULATA CILINDRO 1	1	1				
3	62Y–11133–30	.GUIDE, VALVE 1 .GUIA DE VALVULA 1	8	8				
4	93450–09M01	.CIRCLIP .SEGURO	8	8				
5	6G8–11325–00	ANODE ANODO	4	4				
6	98980–05025	SCREW, BIND TORNILLO DE LIGAR	4	4				
7	6G8–11197–A0	PLUG, BLIND TAPON CIEGO	4	4				
8	93210–13M63	O-RING ANILLO O	4	4				
9	97095–06010	BOLT PERNO	4	4				
10	90430–06014	GASKET JUNTA	4	4				
11	90109–06M65	BOLT PERNO	1	1				
12	90430–06014	GASKET JUNTA	1	1				
13	62Y–11181–00	GASKET, CYLINDER HEAD 1 JUNTA, DE CULATA 1	1	1				
14	99530–08012	PIN, DOWEL PASADOR, DE ESPIGA	2	2				
15	90105–09009	BOLT, FLANGE TORNILLO	10	10				
16	90119–06MA3	BOLT, WITH WASHER TORNILLO CON ARANDELA	5	5				
17	62Y–11191–02–9S	COVER, CYLINDER HEAD 1 TAPA CULATA DE CILINDRO 1	1	1				
18	62Y–14485–00	.PIPE, JOINT .TUBO DE UNION	1	1				
19	62Y–11168–00	COVER, BREATHER CUBIERTA RESPIRADERO	1	1				
20	97607–04210	SCREW, WITH WASHER TORNILLO CAB CON PLANA C/ARAN	4	4				
21	62Y–11356–00	SEAL, CYLINDER 2 RETEN ACEITE CILINDRO 2	1	1				
22	97595–06520	BOLT, WITH WASHER PERNO CON ARANDELA	7	7				
23	62Y–11119–00	HANGER, ENGINE SOPORTE DEL MOTOR	2	2				
24	97595–06520	BOLT, WITH WASHER PERNO CON ARANDELA	4	4				
25	6G8–15363–00	PLUG, OIL TAPON DE ACEITE	1	1				
26	93210–24M79	O-RING ANILLO O	1	1				
27	94701–00375	PLUG, SPARK (NGK DPR6EA-9) BUJIA (NGK DPR6EA-9)	4	4				

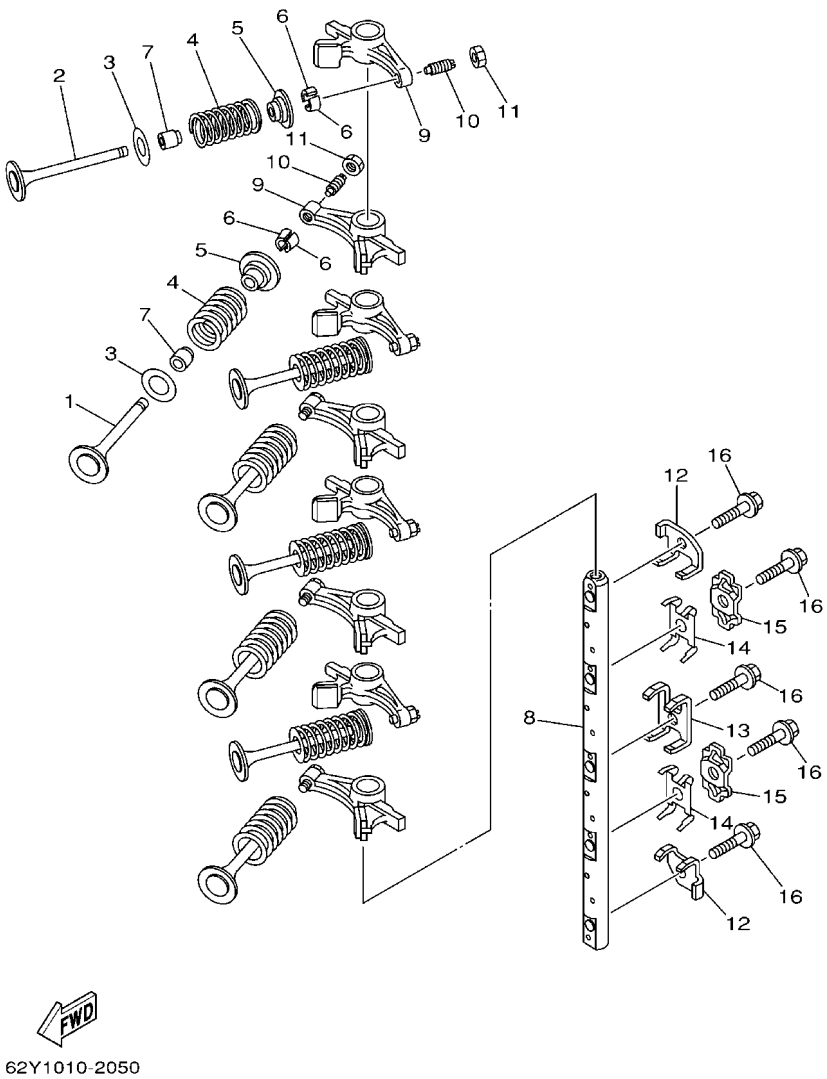

FIG. 6 VALVE — VALVULA

REF. NO.	PART NO. CODIGO Nº	DESCRIPTION DESCRIPCION	EHD	ET				REMARKS OBSERVACIONES
1	64J–12111–10	VALVE, INTAKE VALVULA DE ADMISION	4	4				
2	64J–12121–10	VALVE, EXHAUST VALVULA DE ESCAPE	4	4				
3	62Y–12116–00	SEAT, VALVE SPRING ASIENTO RESORTE DE VALVULA	8	8				
4	51Y–12114–00	SPRING, VALVE OUTER RESORTE VALVULA EXTERIOR	8	8				
5	30X–12117–00	RETAINER, VALVE SPRING RETEN RESORTE DE VALVULA	8	8				
6	30X–12118–00	LOCK, VALVE SPRING RETAINER SEGURO DE VALVULA	16	16				
7	51Y–12119–00	SEAL, VALVE STEM SELLO DE ACEITE VALVULA	8	8				
8	62Y–12146–00	SHAFT, ROCKER ARBOL DE BALANCIN	1	1				
9	62Y–12151–00	ARM, VALVE ROCKER BRAZO DE BALANCIN DE VALVULA	8	8				
10	64J–12159–00	SCREW, VALVE ADJUSTING TORNILLO DE AJUSTE DE VALVULA	8	8				
11	62Y–12158–00	NUT, LOCK ARANDELA DE SEGURIDAD	8	8				
12	64J–12238–00	PLATE, BOLT STOPPER PLACA PERNO DE TOPE	2	2				
13	64J–12279–00	PLATE PLACA	1	1				
14	62Y–12216–00	SPRING RESORTE	2	2				
15	62Y–12231–00	GUIDE, STOPPER 1 TOPE DE GUIA 1	2	2				
16	90109–08M63	BOLT PERNO	5	5				

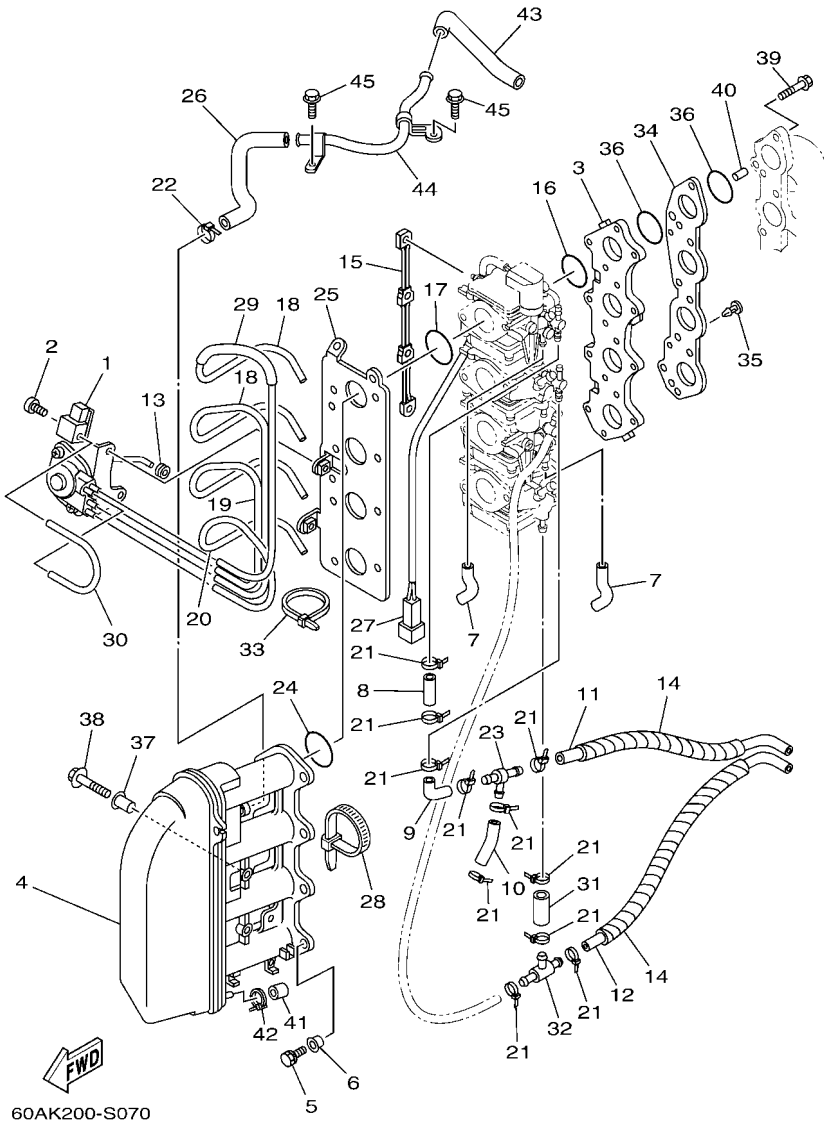

FIG. 7 INTAKE — ADMISION

REF. NO.	PART NO. CODIGO Nº	DESCRIPTION DESCRIPCION	EHD	ET				REMARKS OBSERVACIONES
1	62Y–14369–30	DIAPHRAGM ASSY 2 DIAFRAGMA COMPLETO 2	1	1				
2	650–14327–01	SCREW TORNILLO	3	3				
3	62Y–13586–30	JOINT, CARBURETOR 1 TOBERA DE CARBURADOR 1	1	1				
4	62Y–14440–00	SILENCER ASSY, INTAKE SILENCIADOR COMPL DE ADMISION	1	1				
5	97595–06590	BOLT, WITH WASHER PERNO CON ARANDELA	8	8				
6	90387–06M70	COLLAR ESPACIADOR	8	8				
7	62Y–24312–00	PIPE 2 TUBO 2	2	2				
8	62Y–24313–30	PIPE 3 TUBO 3	1	1				
9	62Y–24313–40	PIPE 3 TUBO 3	1	1				
10	62Y–24313–50	PIPE 3 TUBO 3	1	1				
11	62Y–24313–61	PIPE 3 TUBO 3	1	1				
12	62Y–24313–70	PIPE 3 TUBO 3	1	1				
13	62Y–41262–30	JOINT, CHOKE LEVER CONECTOR DE AHOGADOR	1	1				
14	69W–24313–80	PIPE 3 TUBO 3	2	2				
15	64J–14585–00	ROD, CHOKE VARILLA DE CEBADOR	1	1				
16	93210–30MH4	O-RING ANILLO O	4	4				
17	93210–35M86	O-RING ANILLO O	4	4				
18	64J–14349–11	PIPE TUBO	2	2				
19	64J–14349–21	PIPE TUBO	1	1				
20	64J–14349–31	PIPE TUBO	1	1				
21	90465–11M10	CLAMP BRIDA	12	12				
22	90465–13M36	CLAMP BRIDA	1	1				
23	62Y–24378–00	PIPE, JOINT 3 TUBO DE UNION 3	1	1				
24	93210–38MH3	O-RING ANILLO O	4	4				
25	62Y–14291–30	BRACKET 1 SOPORTE 1	1	1				
26	62Y–1532B–00	PIPE, BREATHER MANGUELA DE RESPIRADERO	1	1				
27	62Y–82509–00	WIRE, SUB LEAD CABLE SUBCONDUCTOR	1	1				

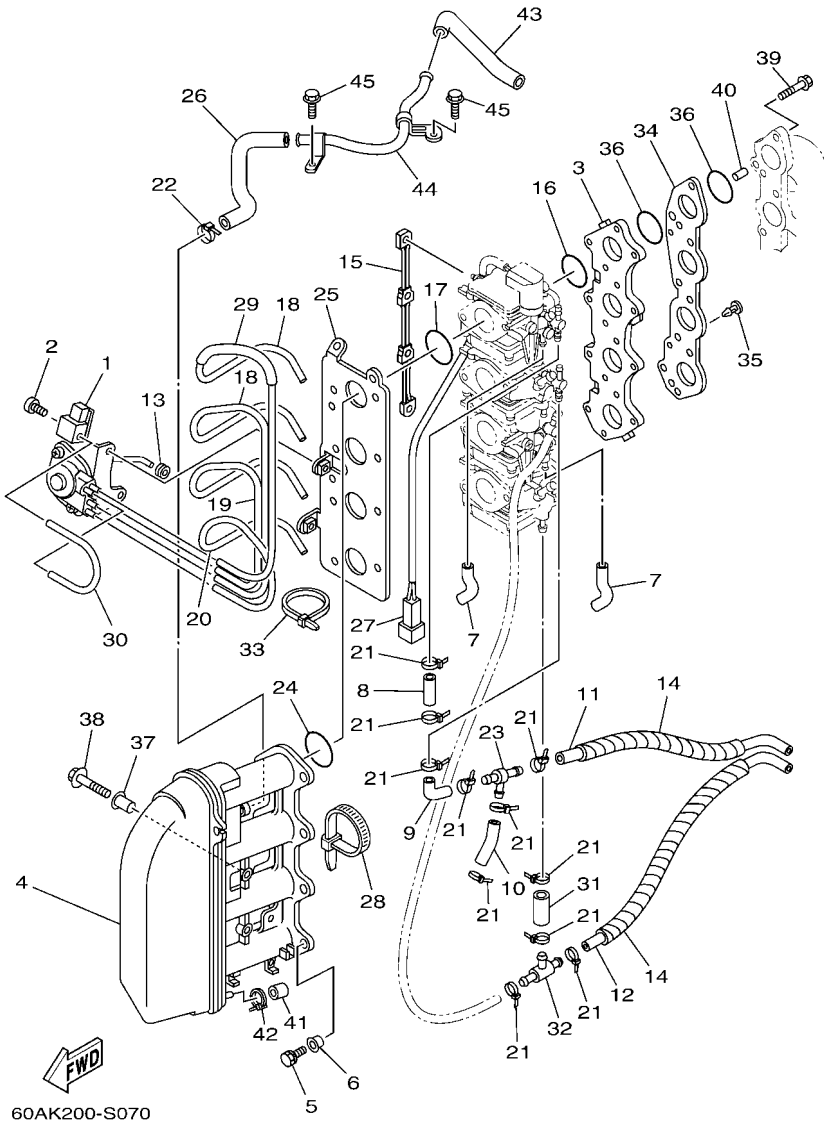

FIG. 7 INTAKE — ADMISION

REF. NO.	PART NO. CODIGO Nº	DESCRIPTION DESCRIPCION	EHD	ET				REMARKS OBSERVACIONES
28	62Y–82544–00	CLAMP GRAMPA	1	1				
29	64J–14349–40	PIPE TUBO	1	1				
30	64J–14349–50	PIPE TUBO	1	1				
31	62Y–24314–00	PIPE 4 TUBO 4	1	1				
32	62Y–24378–00	PIPE, JOINT 3 TUBO DE UNION 3	1	1				
33	62Y–24135–00	CLAMP 1 GRAMPA 1	1	1				
34	62Y–14271–00	INSULATOR AISLANTE	1	1				
35	90338–04M17	PLUG TAPON	2	2				
36	93210–35M86	O-RING ANILLO O	8	8				
37	90387–06M15	COLLAR ESPACIADOR	2	2				
38	97595–06530	BOLT, WITH WASHER PERNO CON ARANDELA	2	2				
39	97595–06525	BOLT, WITH WASHER PERNO CON ARANDELA	8	8				
40	93608–16M16	PIN, DOWEL PASADOR DE CLAVIJA	2	2				
41	62Y–13448–00	CAP TAPA	1	1				
42	90465–11M10	CLAMP BRIDA	1	1				
43	62Y–1531A–00	HOSE, BREATHER 1 MANGUELA DE RESPIRADERO 1	1	1				
44	62Y–15373–10	PIPE, BREATHER MANGUELA DE RESPIRADERO	1	1				
45	97595–06516	BOLT, WITH WASHER PERNO CON ARANDELA	2	2				

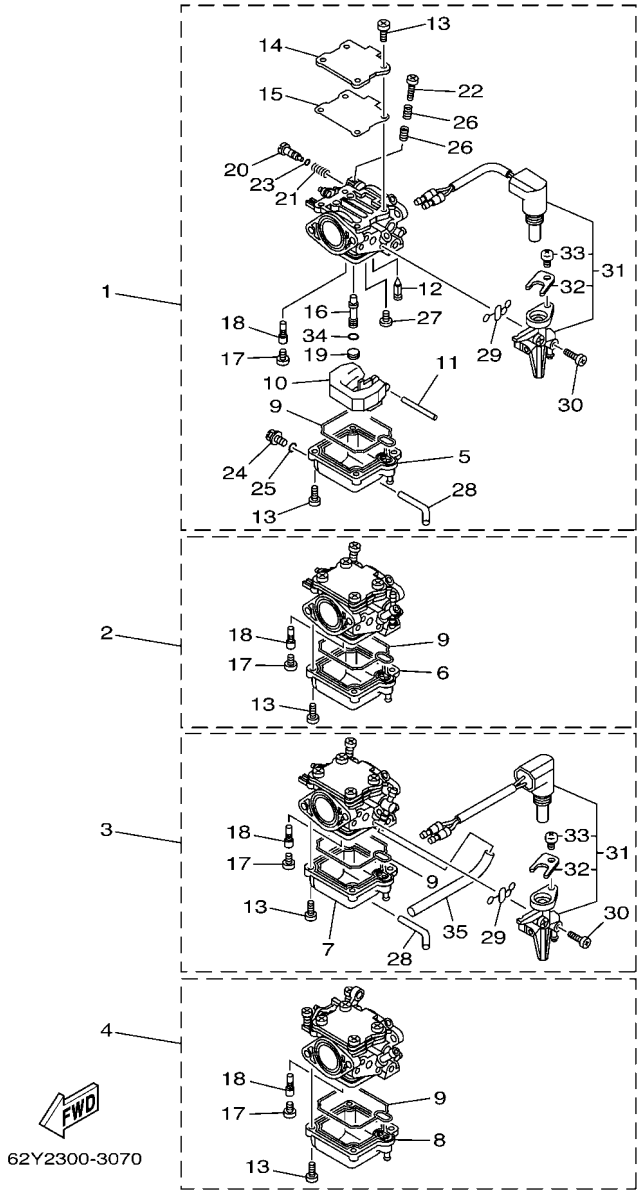

FIG. 8 CARBURETOR — CARBURADOR

REF. NO.	PART NO. CODIGO Nº	DESCRIPTION DESCRIPCION	EHD	ET				REMARKS OBSERVACIONES
1	62Y–14901–30	CARBURETOR ASSY 1 CARBURADOR COMPLETO 1	1	1				
2	62Y–14902–30	CARBURETOR ASSY 2 CARBURADOR COMPLETO 2	1	1				
3	62Y–14903–30	CARBURETOR ASSY 3 CARBURADOR COMPLETO 3	1	1				
4	62Y–14904–31	CARBURETOR ASSY 4 CARBURADOR COMPLETO 4	1	1				
5	62Y–14381–30	.BODY, FLOAT CHAMBER .CUERPO DE CAMARA DE BOIA	1	1				#1 #1
6	62Y–14381–40	.BODY, FLOAT CHAMBER .CUERPO DE CAMARA DE BOIA	1	1				#2 #2
7	62Y–14381–50	.BODY, FLOAT CHAMBER .CUERPO DE CAMARA DE BOIA	1	1				#3 #3
8	62Y–14381–61	.BODY, FLOAT CHAMBER .CUERPO DE CAMARA DE BOIA	1	1				#4 #4
9	62Y–14384–30	.GASKET, FLOAT CHAMBER .EMPAQUE DE CAMARA DE BOIA	4	4				
10	6L2–14385–00	.FLOAT .BOIA	4	4				
11	6E5–14386–01	.PIN, FLOAT .PASADOR DE BOIA	4	4				
12	62Y–14392–00	.VALVE, NEEDLE .VALVULA DE AGUJA	4	4				
13	62Y–14321–00	.SCREW, THROTTLE .TORNILLO DE OBTURADOR	32	32				
14	62Y–14157–30	.COVER, MIXING .CUBIERTA DE MEZCLA	4	4				
15	62Y–14399–30	.GASKET .EMPAQUE	4	4				
16	62Y–14341–30	.NOZZLE, MAIN .BOQUILLA PRINCIPAL	4	4				
17	62Y–14343–62	.JET, MAIN (#124) .INYECTOR PRINCIPAL (#124)	1	1				#1 #1
	62Y–14343–63	.JET, MAIN (#126) .INYECTOR PRINCIPAL (#126)	1	1				#2 #2
	62Y–14343–58	.JET, MAIN (#116) .INYECTOR PRINCIPAL (#116)	1	1				#3 #3
	62Y–14343–57	.JET, MAIN (#114) .INYECTOR PRINCIPAL (#114)	1	1				#4 #4
18	64J–14342–20	.JET, PILOT (#39) .ESPREA DE PILOTO (#39)	4	4				
19	62Y–14355–30	.PLUG .TAPON	4	4				
20	62Y–14323–30	.SCREW, AIR ADJUSTING .TORNILLO DE AJUSTE DE AIRE	4	4				
21	62Y–14334–00	.SPRING, AIR ADJUSTING .RESORTE DE AJUSTADOR DE AIRE	4	4				
22	62Y–14321–10	.SCREW, THROTTLE .TORNILLO DE OBTURADOR	4	4				
23	2T4–14397–00	.O-RING .ANILLO O	4	4				
24	62Y–14383–30	.SCREW, DRAIN .TORNILLO DE DRENAJE	4	4				

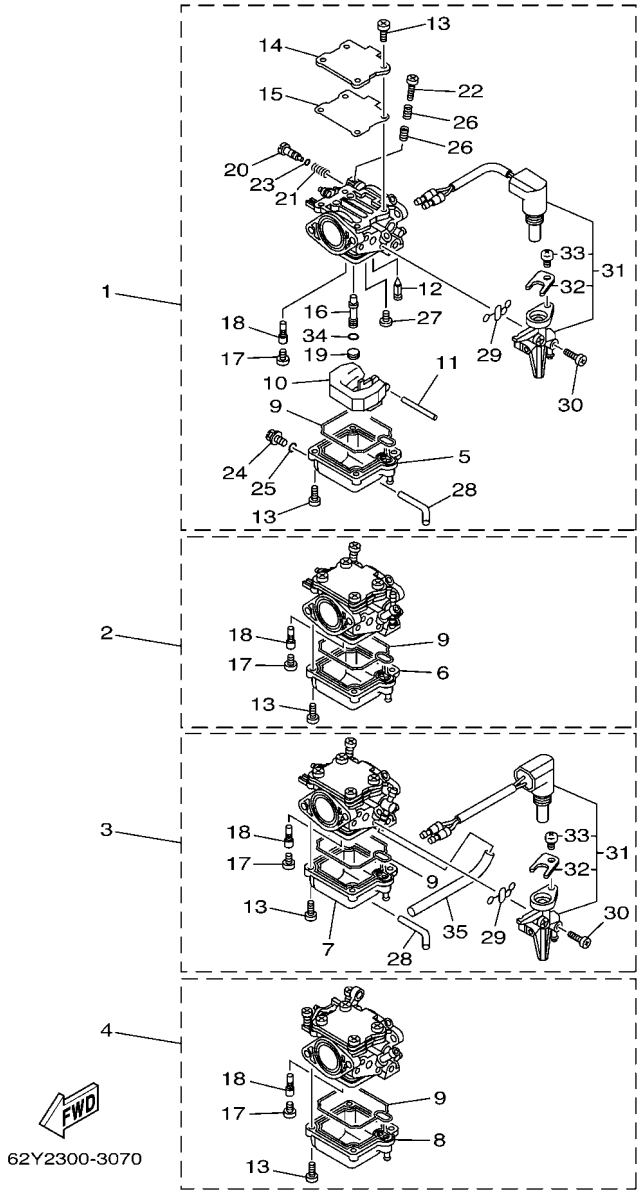

FIG. 8 CARBURETOR CARBURADOR

REF. NO.	PART NO. CODIGO Nº	DESCRIPTION DESCRIPCION	EHD	ET				REMARKS OBSERVACIONES
25	652–14397–00	.O-RING .ANILLO O	4	4				
26	62Y–14212–00	.SPRING, PILOT ADJUSTING .RESORTE DE AJUSTE DE PILOTO	8	8				
27	98980–04006	.SCREW, BIND .TORNILLO DE LIGAR	4	4				
28	62Y–24311–30	.PIPE, FUEL 1 .TUBO DE COMBUSTIBLE 1	2	2				#1,3 #1,3
29	62Y–14398–30	.GASKET .EMPAQUE	2	2				#1,3 #1,3
30	62Y–14567–30	.SCREW .TORNILLO	2	2				#1 #1
	62Y–14567–40	.SCREW .TORNILLO	2	2				#3 #3
31	62Y–14380–10	.PRIME STARTER ASSY .JUEGO DE VALVULA DE ARRANQUE	1	1				#1 #1
	62Y–14380–20	.PRIME STARTER ASSY .JUEGO DE VALVULA DE ARRANQUE	1	1				#3 #3
32	62Y–14243–00	..PLATE ..PLACA	1	1				
33	97890–04007	..SCREW, PAN HEAD ..TORNILLO	1	1				
34	62Y–14227–00	.O-RING .ANILLO O	4	4				
35	62Y–24313–90	.PIPE 3 .TUBO 3	1	1				#3 #3

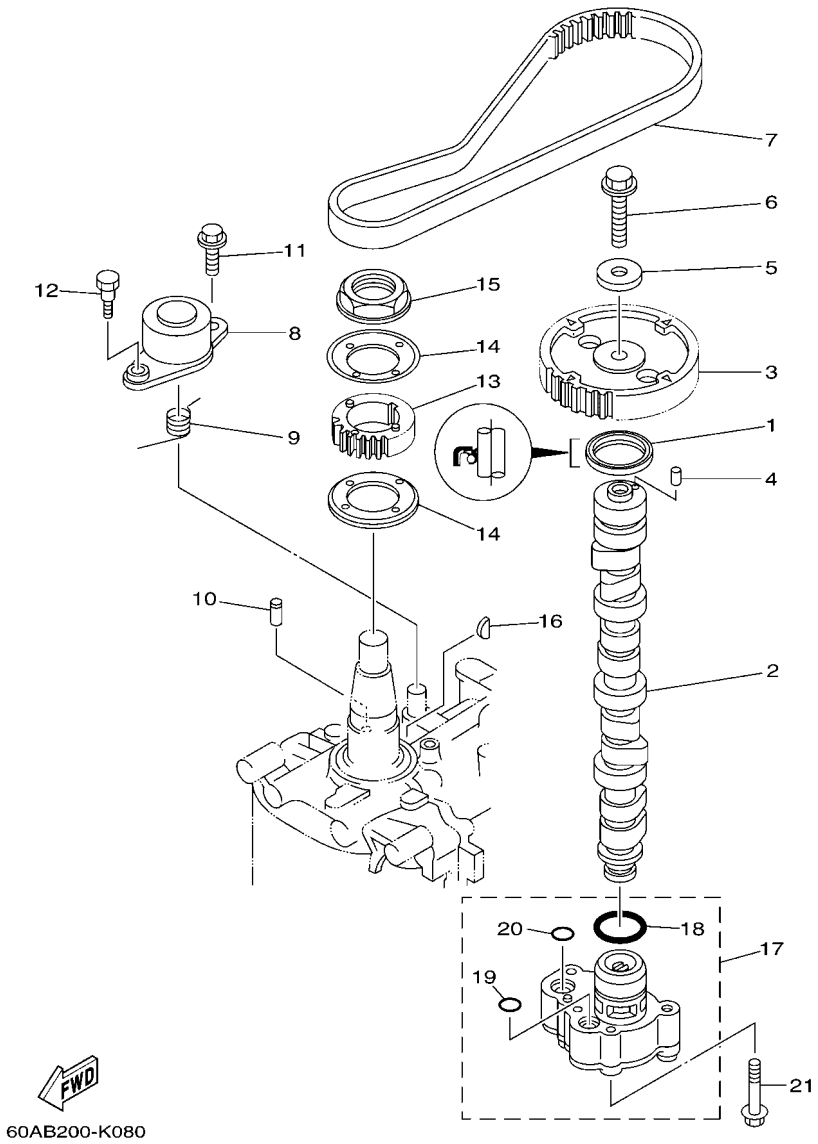

FIG. 9 OIL PUMP — BOMBA DE ACEITE

REF. NO.	PART NO. CODIGO Nº	DESCRIPTION DESCRIPCION	EHD	ET				REMARKS OBSERVACIONES
1	93102–37M40	OIL SEAL SELLO ACEITE	1	1				
2	62Y–12171–00	CAMSHAFT 1 ARBOL DE LEVAS 1	1	1				
3	62Y–11537–10	GEAR, DRIVEN ENGRANAJE TRACCION	1	1				
4	93605–14143	PIN, DOWEL PASADOR DE CLAVIJA	1	1				
5	90201–10M06	WASHER, PLATE ARANDELA PLANA	1	1				
6	95895–10040	BOLT, FLANGE TORNILLO DE REBORDE	1	1				
7	62Y–46241–00	BELT CORREA	1	1				
8	62Y–11590–10	TENSIONER ASSY TENSOR COMPLET	1	1				
9	90508–20018	SPRING, TORSION RESORTE DE TORSION	1	1				
10	90249–07M29	PIN PASADOR	1	1				
11	95895–08020	BOLT, FLANGE TORNILLO DE REBORDE	1	1				
12	90109–06M64	BOLT PERNO	1	1				
13	62Y–11536–10	GEAR, DRIVE ENGRANAJE TRACCION	1	1				
14	62Y–11557–00	WASHER 1 ARANDELA 1	2	2				
15	90179–35001	NUT TUERCA	1	1				
16	90280–04M06	KEY, WOODRUFF CUNA WOODRUFF	1	1				
17	69W–13300–01	OIL PUMP ASSY BOMBA DE ACEITE COMPLETA	1	1				
18	93210–33MH2	.O-RING .ANILLO O	1	1				
19	93210–12MG9	.O-RING .ANILLO O	1	1				
20	93210–14515	.O-RING .ANILLO O	1	1				
21	90119–06025	BOLT, WITH WASHER TORNILLO CON ARANDELA	4	4				

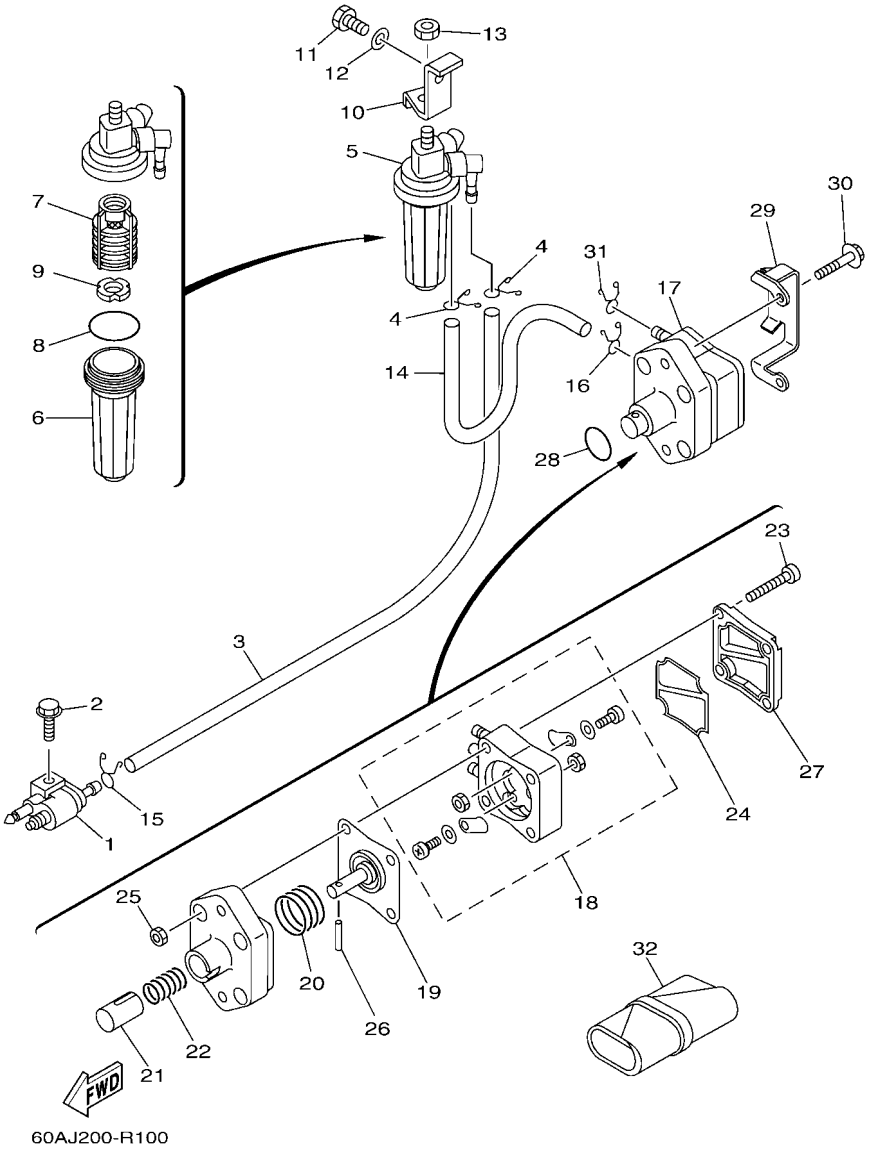

FIG. 10 FUEL — COMBUSTIBLE

REF. NO.	PART NO. CODIGO Nº	DESCRIPTION DESCRIPCION	EHD	ET				REMARKS OBSERVACIONES
1	6G1–24304–10	FUEL PIPE JOINT COMP. 1 CONECTOR MANGUERA COMBUST.1	1	1				
2	97595–06525	BOLT, WITH WASHER PERNO CON ARANDELA	1	1				
3	90445–10020	HOSE (L590) TUBO (L590)	1	1				
4	90467–09M17	CLIP PRESILLA	2	2				
5	64J–24560–10	FILTER ASSY FILTRO COMPLETO	1	1				
6	68V–24521–01	.CUP, FILTER .COPA DE FILTRO	1	1				
7	61N–24563–10	.ELEMENT, FILTER .ELEMENTO DEL FILTRO	1	1				
8	93210–32738	.O-RING .ANILLO O	1	1				
9	68V–24469–01	.FLOAT, WATER LEVEL .BOIA	1	1				
10	62Y–24566–01	BRACKET, FILTER SOPORTE DEL FILTRO	1	1				
11	97095–08014	BOLT PERNO	1	1				
12	92995–08600	WASHER ARANDELA	1	1				
13	95380–08600	NUT TUERCA	1	1				
14	90445–10M48	HOSE (L205) TUBO (L205)	1	1				
15	90467–09M17	CLIP PRESILLA	1	1				
16	90467–10M04	CLIP PRESILLA	1	1				
17	62Y–24410–04	FUEL PUMP ASSY BOMBA DE COMBUSTIBLE COMPLETA	1	1				
18	62Y–24415–01	.BODY 4 .CUERPO 4	1	1				
19	62Y–24411–02	.DIAPHRAGM .DIAFRAGMA	1	1				
20	62Y–24423–00	.SPRING, DIAPHRAGM .RESORTE DE DIAFRAGMA	1	1				
21	62Y–13131–01	.PLUNGER .ESPACIADOR	1	1				
22	62Y–24454–00	.SPRING .RESORTE	1	1				
23	62Y–24444–01	.SCREW .TORNILLO	4	4				
24	6C5–24471–00	.DIAPHRAGM .DIAFRAGMA	1	1				
25	95380–05600	.NUT .TUERCA	4	4				
26	62Y–24374–01	.PIN .PIN	1	1				
27	6C5–24414–00	.BODY 3 .CUERPO 3	1	1				

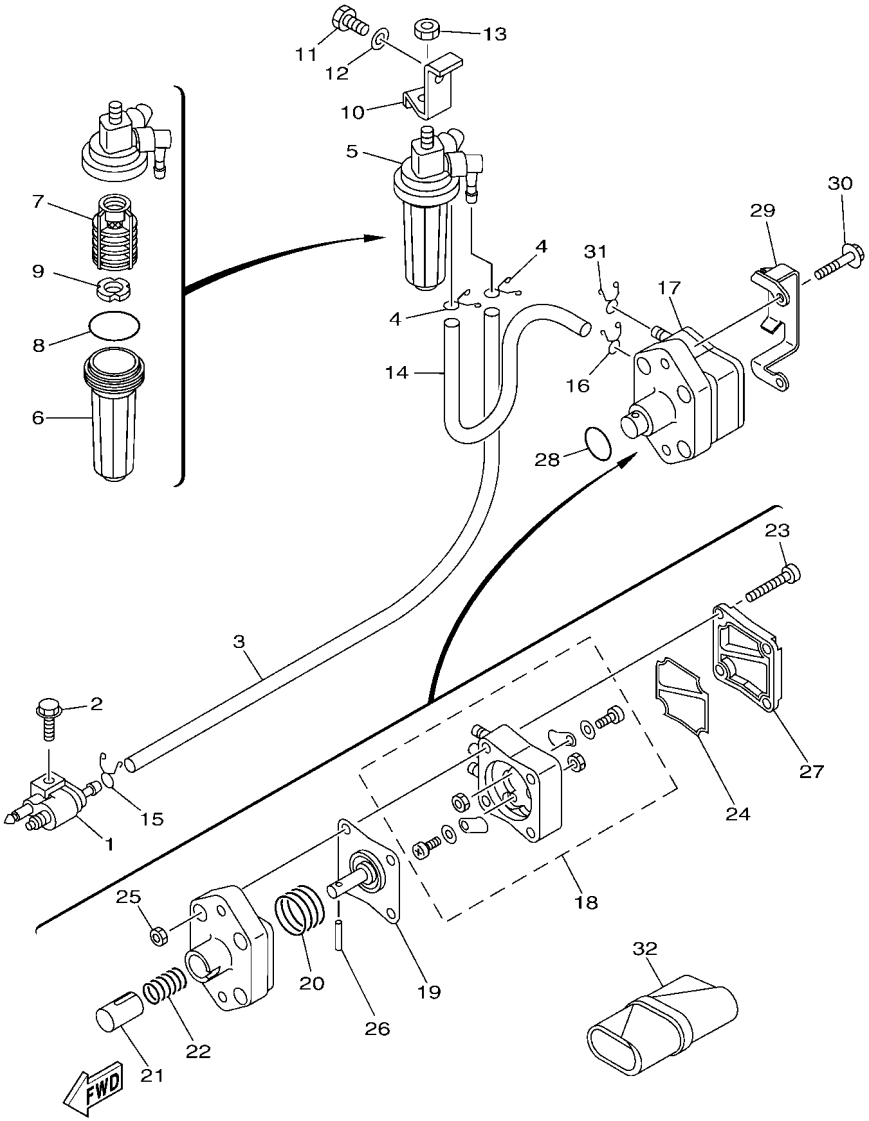

FIG. 10 FUEL COMBUSTIBLE

REF. NO.	PART NO. CODIGO Nº	DESCRIPTION DESCRIPCION	EHD	ET				REMARKS OBSERVACIONES
28	93210–24M79	O-RING ANILLO O	1	1				
29	6GL–24474–00	COVER CUBIERTA	1	1				
30	97595–06530	BOLT, WITH WASHER PERNO CON ARANDELA	2	2				
31	90467–10M04	CLIP PRESILLA	2	2				
32	62Y–28100–00	TOOL KIT JUEGO DE HERRAMIENTAS	1	1				UR UR
	62Y–28100–10	TOOL KIT JUEGO DE HERRAMIENTAS	1	1				UR UR

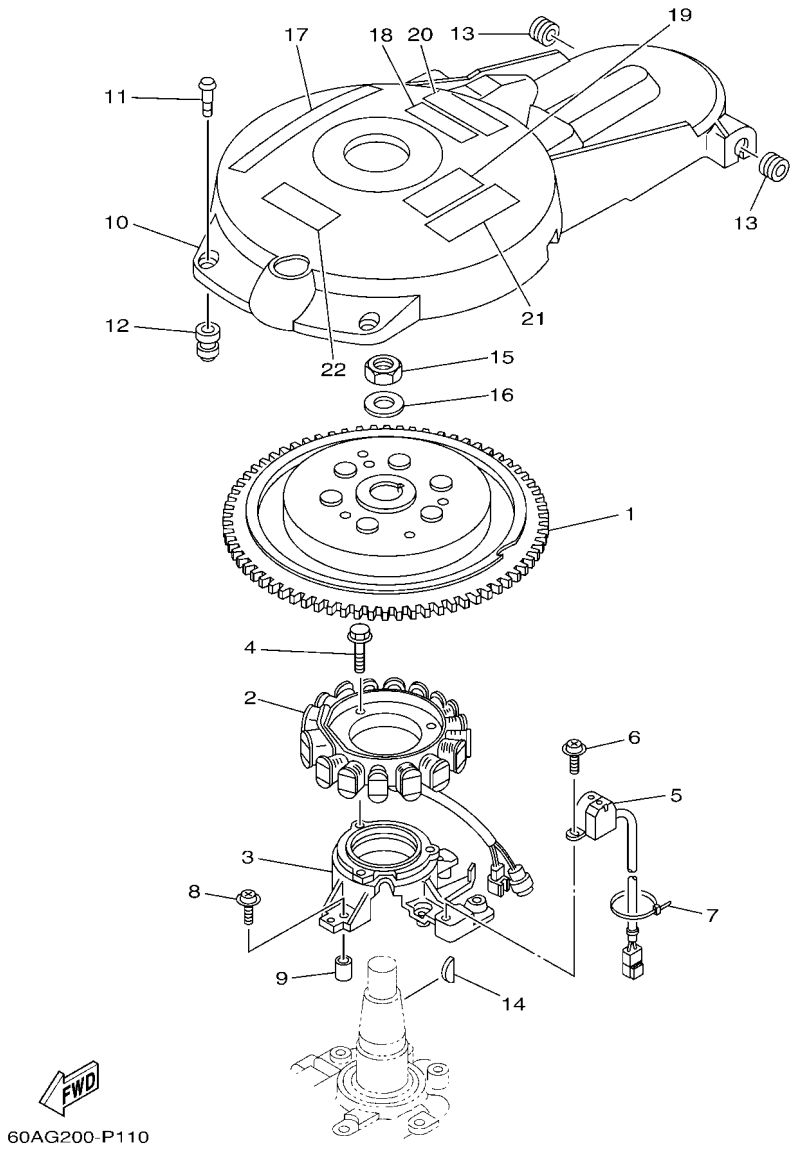

FIG. 11 GENERATOR GENERADOR

REF. NO.	PART NO. CODIGO Nº	DESCRIPTION DESCRIPCION	EHD	ET				REMARKS OBSERVACIONES
1	69W–85550–10	ROTOR ASSY ROTOR COMPLETO	1	1				
2	64J–85510–00	STATOR ASSY ESTATOR COMPLETO	1	1				
3	62Y–85561–00	BASE, MAGNETO BASE DE MAGNETO	1	1				
4	95023–06025	BOLT TORNILLO	3	3				
5	62Y–85580–00	COIL, PULSER BOBINA DE PULSACION	1	1				
6	97980–05312	SCREW, WITH WASHER TORNILLO, CON ARANDELA	2	2				
7	90465–13M97	CLAMP BRIDA	1	1				
8	97980–06225	SCREW, WITH WASHER TORNILLO, CON ARANDELA	4	4				
9	99530–08012	PIN, DOWEL PASADOR, DE ESPIGA	2	2				
10	62Y–81337–11	COVER, FLYWHEEL CUBIERTA DE VOLANTE	1	1				
11	6K7–81338–01	CLAMP, LEAD GRAMPA DE CONDUCTOR	2	2				
12	663–82317–01	DAMPER, IGNITION COIL AMORTIGUADOR BOBINA ENCENDIDO	2	2				
13	90480–12314	GROMMET TAPON	2	2				
14	6H4–11545–00	KEY, WOODRUFF CHAVETA WOODRUFF	1	1				
15	90170–20137	NUT TUERCA	1	1				
16	90201–21M18	WASHER, PLATE ARANDELA PLANA	1	1				
17	62Y–13437–63	MARK, CAUTION MARKER	1	1				
18	6EE–81995–40	LABEL, WARNING ETIQUETA DE PRECAUCION	1	1				
19	6EE–81995–50	LABEL, WARNING ETIQUETA DE PRECAUCION	1	1				FOR CAR(CE) FOR CAR(CE)
20	6EE–81994–40	LABEL, SAFETY ETIQUETA DE SEGURIDAD	1	1				
21	6EE–81994–50	LABEL, SAFETY ETIQUETA DE SEGURIDAD	1	1				FOR CAR(CE) FOR CAR(CE)
22	6AG–81996–00	MARK MARCA		1				FOR CAR(CE) FOR CAR(CE)

FIG. 12 ELECTRICAL 1 — EQUIPO ELECTRICO 1

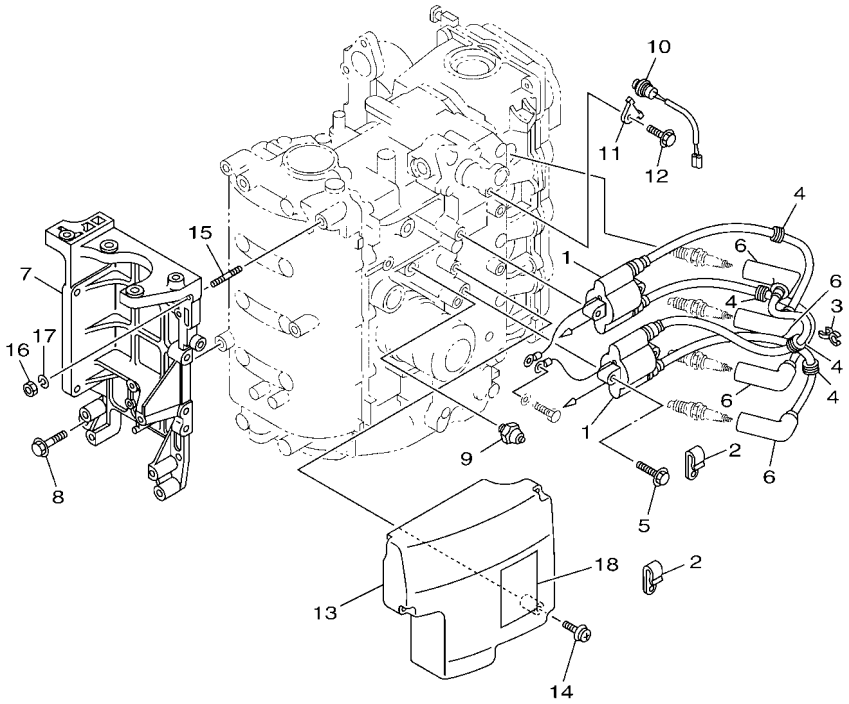

60AG200-P120

REF. NO.	PART NO. CODIGO Nº	DESCRIPTION DESCRIPCION	EHD	ET				REMARKS OBSERVACIONES
1	62Y–85570–00	IGNITION COIL ASSY BOBINA DE IGNICION COMPLETO	2	2				
2	90465–06M90	CLAMP BRIDA	2	2				
3	90464–07M41	CLAMP BRIDA	1	1				
4	90480–25161	GROMMET TAPON	4	4				
5	97595–06530	BOLT, WITH WASHER PERNO CON ARANDELA	4	4				
6	6G8–82370–30	PLUG CAP ASSY TAPON DE BUJIA COMPLT	4	4				
7	62Y–81822–01	BRACKET, STARTING MOTOR SOPORTE DE MOTOR DE ARRANQUE	1	1				
8	97595–08535	BOLT, WITH WASHER PERNO CON ARANDELA	3	3				
9	64J–82504–00	OIL PRESSURE SWITCH ASSY INTERRUPTOR PRESION DE ACEITE	1	1				
10	62Y–82560–01	THERMO SWITCH ASSY INTER. DE TERMO	1	1				
11	6E9–82588–00	PLATE PLACA	1	1				
12	97595–06512	BOLT, WITH WASHER PERNO CON ARANDELA	1	1				
13	62Y–85599–00	COVER CUBIERTA	1	1				
14	90159–06M08	SCREW, WITH WASHER TORNILLO CON VALONA	3	3				
15	90116–08M14	BOLT, STUD ESPARRAGO	1	1				
16	95380–08600	NUT TUERCA	1	1				
17	92990–08100	WASHER, SPRING ARANDELA PLANA	1	1				
18	62Y–83626–00	MARK 6 MARCA 6	1	1				

FIG. 13 ELECTRICAL 2 — EQUIPO ELECTRICO 2

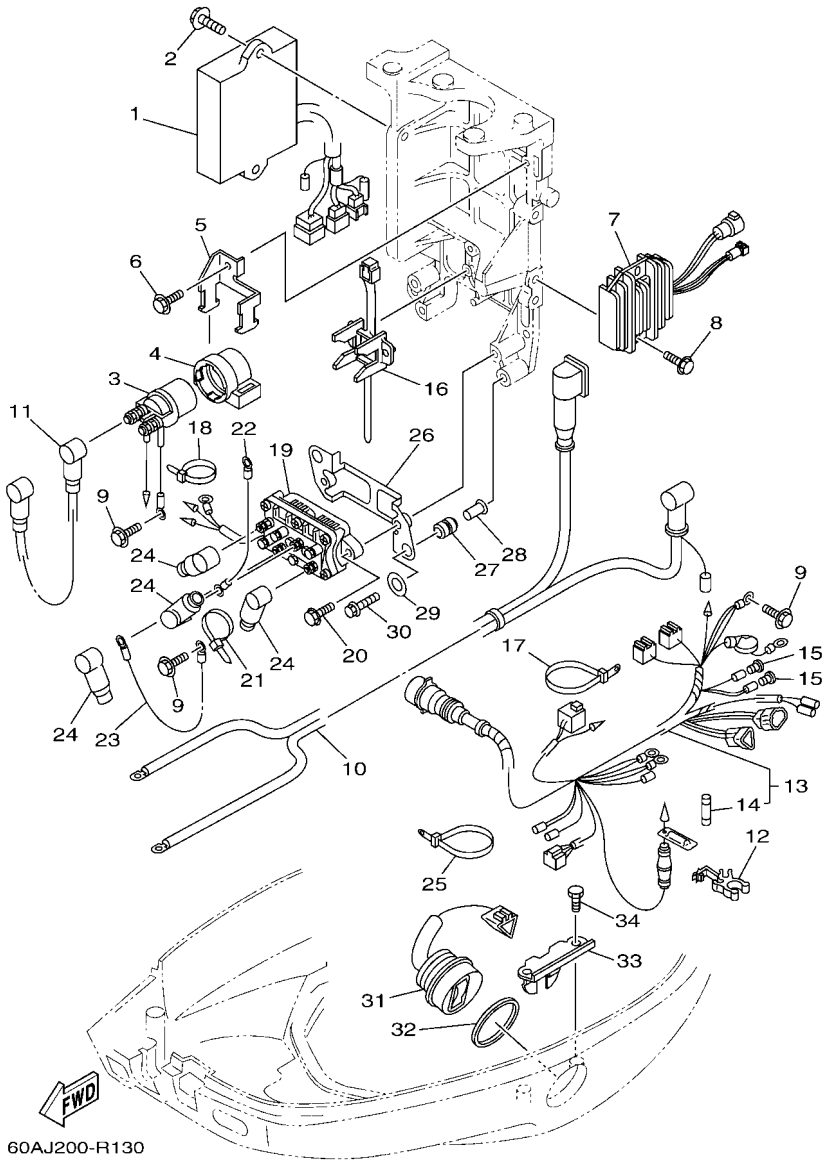

REF. NO.	PART NO. CODIGO Nº	DESCRIPTION DESCRIPCION	EHD	ET				REMARKS OBSERVACIONES
1	64J–85540–12	C.D.I. UNIT ASSY UNIDAD C.D.I. COMPLETA	1	1				
2	97595–06620	BOLT, WITH WASHER PERNO CON ARANDELA	2	2				
3	6G1–81941–10	STARTER RELAY ASSY RELE DE ARRANQUE	1	1				
4	6G1–81952–00	HOLDER, RELAY SOSTEN DE RELE	1	1				
5	6L2–81945–00	PLATE, SWITCH FITTING PLACA ACCESORIA DE INTERRUP.	1	1				
6	97595–06514	BOLT, WITH WASHER PERNO CON ARANDELA	1	1				
7	64J–81960–10	RECTIFIER & REGULATOR ASSY RECTIFICADOR Y REGULADOR	1	1				
8	97595–06525	BOLT, WITH WASHER PERNO CON ARANDELA		2				
9	97595–06512	BOLT, WITH WASHER PERNO CON ARANDELA	3	3				
10	62Y–82105–01	BATTERY CABLE CABLE DE BATERIA	1	1				
	62Y–82105–U1	BATTERY CABLE CABLE DE BATERIA	1	1				FOR CHL,CSA,MEX FOR CHL,CSA,MEX
11	6E5–82117–01	WIRE, LEAD CABLE CONDUCTOR	1	1				
12	6G5–82152–00	HOLDER, FUSE PORTA-FUSIBLES	1	1				
13	64J–82590–20	WIRE HARNESS ASSY (10P) CONJUNTO DE CABLES (10P)	1					
	64J–82590–50	WIRE HARNESS ASSY (10P) CONJUNTO DE CABLES (10P)		1				
14	663–82151–00	.FUSE (12V-20A) .FUSIBLE (12V-20A)	1	1				
15	703–82119–00	COVER, LEAD WIRE CUBIERTA DE CABLE CONDUCTOR		2				
16	688–82594–00	CLAMP GRAMPA	1	1				
17	90465–13M24	CLAMP BRIDA	1	1				
18	90465–13M11	CLAMP BRIDA		1				L(21.1") L(21.1")
19	6H1–81950–00	RELAY ASSY RELE COMPLETO		1				
20	97595–06520	BOLT, WITH WASHER PERNO CON ARANDELA		2				
21	90465–13M11	CLAMP BRIDA		1				
22	6H2–81949–01	WIRE, LEAD CABLE CONDUCTOR		1				
23	61A–81949–00	WIRE, LEAD CABLE CONDUCTOR		1				
24	682–82119–01	COVER, LEAD WIRE CUBIERTA DE CABLE CONDUCTOR		4				
25	90465–13M24	CLAMP BRIDA		1				

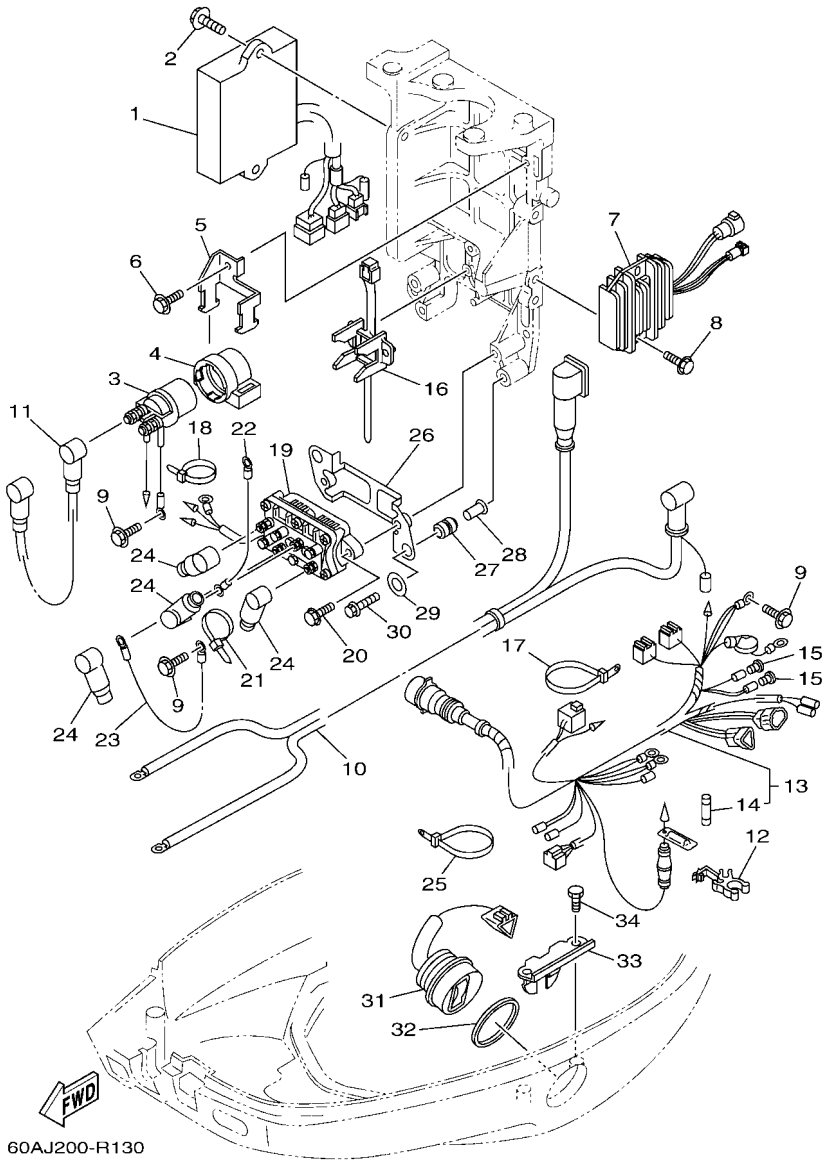

FIG. 13 ELECTRICAL 2 — EQUIPO ELECTRICO 2

REF. NO.	PART NO. CODIGO Nº	DESCRIPTION DESCRIPCION	EHD	ET				REMARKS OBSERVACIONES
26	62Y–81948–00	BRACKET SOPORTE		1				
27	6A0–82317–00	DAMPER, IGNITION COIL AMORTIGUADOR BOBINA ENCENDIDO		2				
28	90387–06119	COLLAR ESPACIADOR		2				
29	90201–12M16	WASHER, PLATE ARANDELA PLANA		2				
30	95895–06025	BOLT, FLANGE TORNILLO DE REBORDE		2				
31	63D–82563–11	TRIM & TILT SWITCH ASSY INTERRUPTOR DE INCLINACION		1				
32	6E5–82587–00	GASKET EMPAQUETADURA		1				
33	62Y–83614–00	BRACKET SOPORTE		1				
34	97095–06012	BOLT PERNO		2				

FIG. 14 ELECTRICAL 3 — EQUIPO ELECTRICO 3

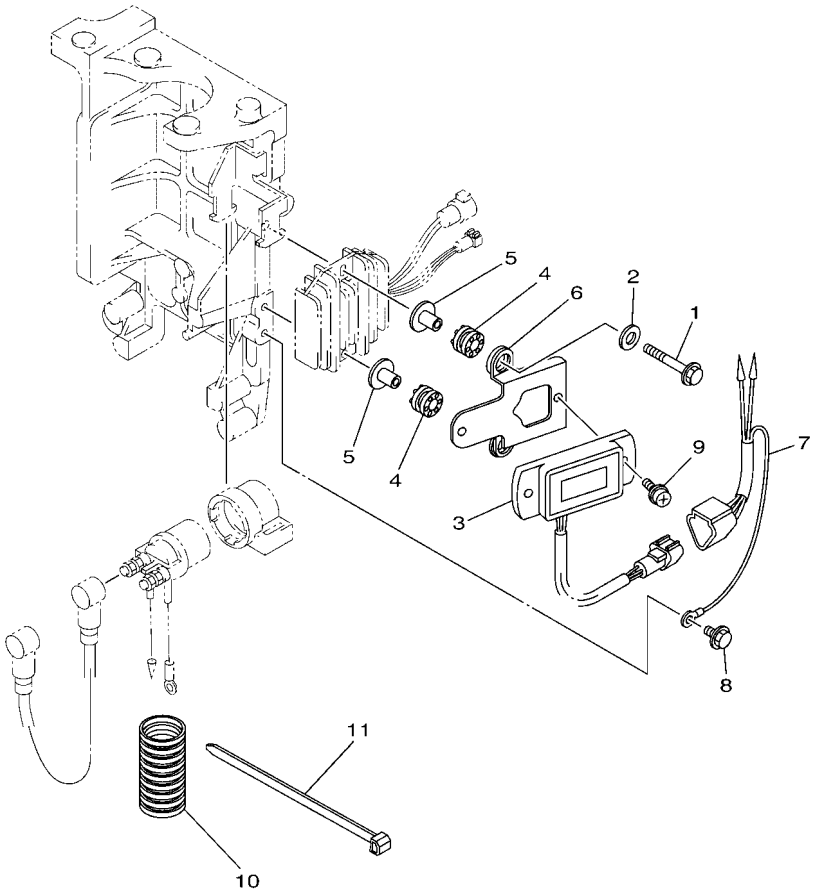

61SH200-S140

REF. NO.	PART NO. CODIGO Nº	DESCRIPTION DESCRIPCION	EHD	ET				REMARKS OBSERVACIONES
1	97595–06540	BOLT, WITH WASHER PERNO CON ARANDELA	2					
2	90201–06M05	WASHER, PLATE ARANDELA PLANA	2					
3	6Y5–83504–22	HOUR METER ASSY MEDIDOR DE HORAS COMPLETO	1					
4	64J–85516–00	SPACER ESPACIADOR	2					
5	69M–42758–01	COLLAR COLLAR	2					
6	64J–83519–00	BRACKET, METER SOPORTE DE MEDIDOR	1					
7	64J–82553–00	EXTENSION, WIRE LEAD CABLE	1					
8	97595–06512	BOLT, WITH WASHER PERNO CON ARANDELA	1					
9	90159–05M13	SCREW, WITH WASHER TORNILLO CON VALONA	2					
10	6K3–83557–00	TUBE ENCHUFE DE ACEITE	1					
11	90465–13M24	CLAMP BRIDA	1					

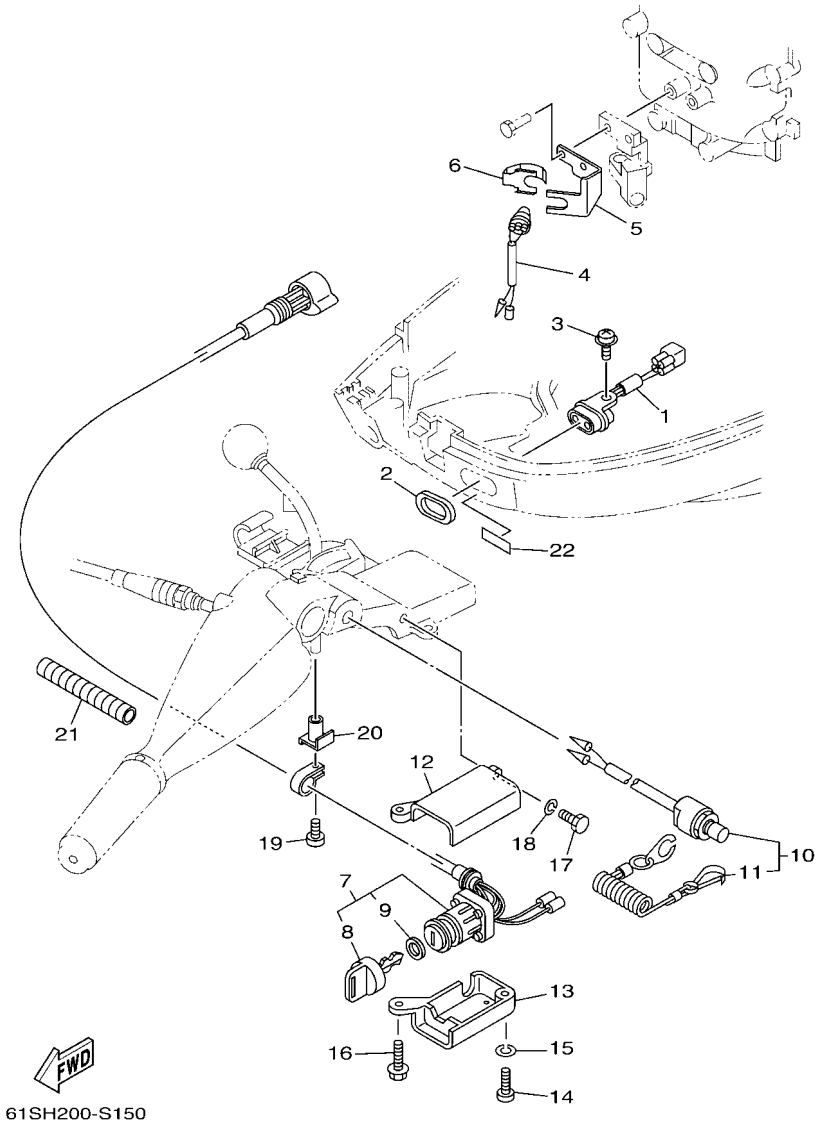

FIG. 15 ELECTRICAL 4 — EQUIPO ELECTRICO 4

REF. NO.	PART NO. CODIGO Nº	DESCRIPTION DESCRIPCION	EHD	ET				REMARKS OBSERVACIONES
1	62Y–84301–00	PILOT LIGHT ASSY 1 LUZ PILOTO COMPLETA 1	1					
2	6FM–83589–00	GASKET EMPAQUE	1					
3	97980–06214	SCREW, WITH WASHER TORNILLO, CON ARANDELA	1					
4	6F5–82540–01	NEUTRAL SWITCH ASSY INTERRUPTOR NEUTRAL COMPL	1					
5	62Y–82554–01	STAY, NEUTRAL SWITCH SOPORTE INTERRUPTOR DE NEUTRAL	1					
6	6C5–82555–00	DAMPER, MAIN SWITCH 1 AMORT.DE INTER.PPAL.1	1					
7	6H3–82510–21	MAIN SWITCH ASSY CONJUNTO DE LLAVE IGNICION	1					
8	676–82577–01	.CAP, KEY .TAPA	1					
9	703–82532–00	.CAP .TAPA	1					
10	688–82575–12	ENGINE STOP SWITCH ASSY INTERRUPTOR DE PARADA COMPL	1					
11	682–82556–00	.LANYARD, STOP SWITCH .CORDON DE INTERRUPTOR PARADA	1					
12	697–8252E–02–8D	COVER, MAIN SWITCH 1 CUBIELA INTERRUPTOR PRINC.1	1					
13	697–8252F–02–8D	COVER, MAIN SWITCH 2 CUBIELA INTERRUPTOR PRINC.2	1					
14	97880–06025	SCREW, PAN HEAD TORNILLO DE CABEZA CON PLANA	1					
15	92990–06100	WASHER, SPRING ARANDELA PLANA	1					
16	97513–06530	BOLT, WITH WASHER PERNO CON ARANDELA	1					
17	97013–06020	BOLT PERNO	1					
18	92903–06100	WASHER, SPRING RONDANA SENCILLA	1					
19	97885–06030	SCREW, PAN HEAD TORNILLO A MUESCA	1					
20	61S–82581–00	STAY, CORD CLAMP SOPORTE DE GRAMPA DE CABLE	1					
21	90446–17M11	HOSE TUBO RESEIRADERO	1					
22	6H4–85415–10	MARK, SIGNAL LAMP MARCO DE FOCO DE SENAL	1					

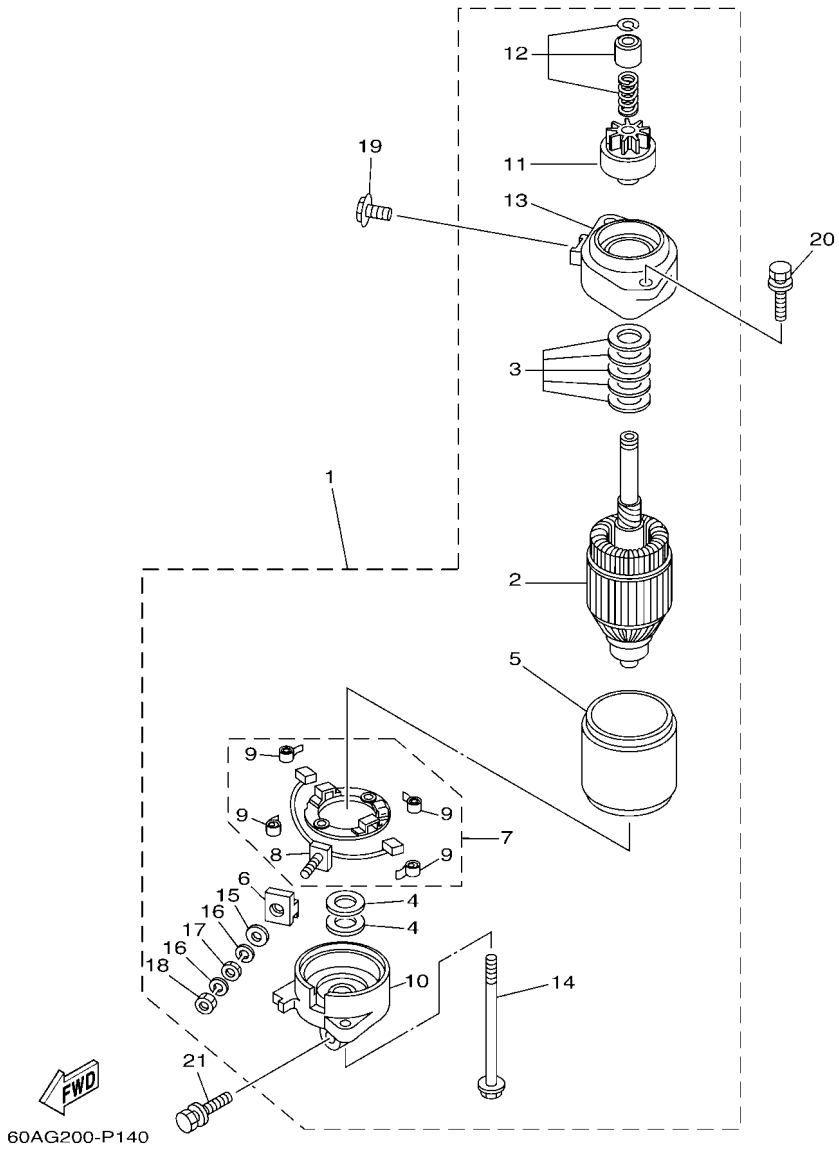

FIG. 16 STARTING MOTOR — MOTOR DE ARRANQUE

REF. NO.	PART NO. CODIGO Nº	DESCRIPTION DESCRIPCION	EHD	ET				REMARKS OBSERVACIONES
1	69W–81800–00	STARTING MOTOR ASSY MOTOR DE ARRANQUE COMPLETO	1	1				
2	6N7–81850–10	.ARMATURE ASSY .INDUCIDO COMPLETO	1	1				
3	61A–81809–00	.WASHER KIT .JUEGO DE ARANDELA	1	1				
4	61A–81824–00	.WASHER 2 .ARANDELA 2	2	2				
5	6N7–81810–00	.STATOR ASSY .ESTATOR COMPLETO	1	1				
6	6K7–8182G–10	.BUSH, TERMINAL .BUJE DE TERMINAL	1	1				
7	6N7–81840–00	.BRUSH HOLDER ASSY .SOSTEN DE ESCOBILLA COMPLETO	1	1				
8	6N7–81801–00	..BRUSH SET ..JUEGO DE ESCOBILLA	1	1				
9	6N7–81813–00	..SPRING, BRUSH ..RESORTE DE ESCOBILLA	4	4				
10	6N7–81820–00	.REAR BRACKET ASSY .CUBIERTA TRASERA COMPL	1	1				
11	69W–81807–00	.GEAR ASSY, STARTING MOTOR .PINON CONJUNTO	1	1				
12	6N7–81857–00	.PINION STOPPER SET .JUEGO TAPON PINON	1	1				
13	6N7–81830–00	.FRONT BRACKET ASSY .SOPORTE DELANTERO COMPLETO	1	1				
14	6K7–81826–11	.BOLT .PERNO	2	2				
15	6E5–8182E–10	.WASHER .RONDANA	1	1				
16	6E5–8182F–10	.WASHER .RONDANA	2	2				
17	6E5–8182A–10	.NUT .TUERCA	1	1				
18	6E5–8182K–10	.NUT .TUERCA	1	1				
19	97595–08516	BOLT, WITH WASHER PERNO CON ARANDELA	1	1				
20	90119–08M76	BOLT, WITH WASHER TORNILLO CON ARANDELA	2	2				
21	90119–08M77	BOLT, WITH WASHER TORNILLO CON ARANDELA	1	1				

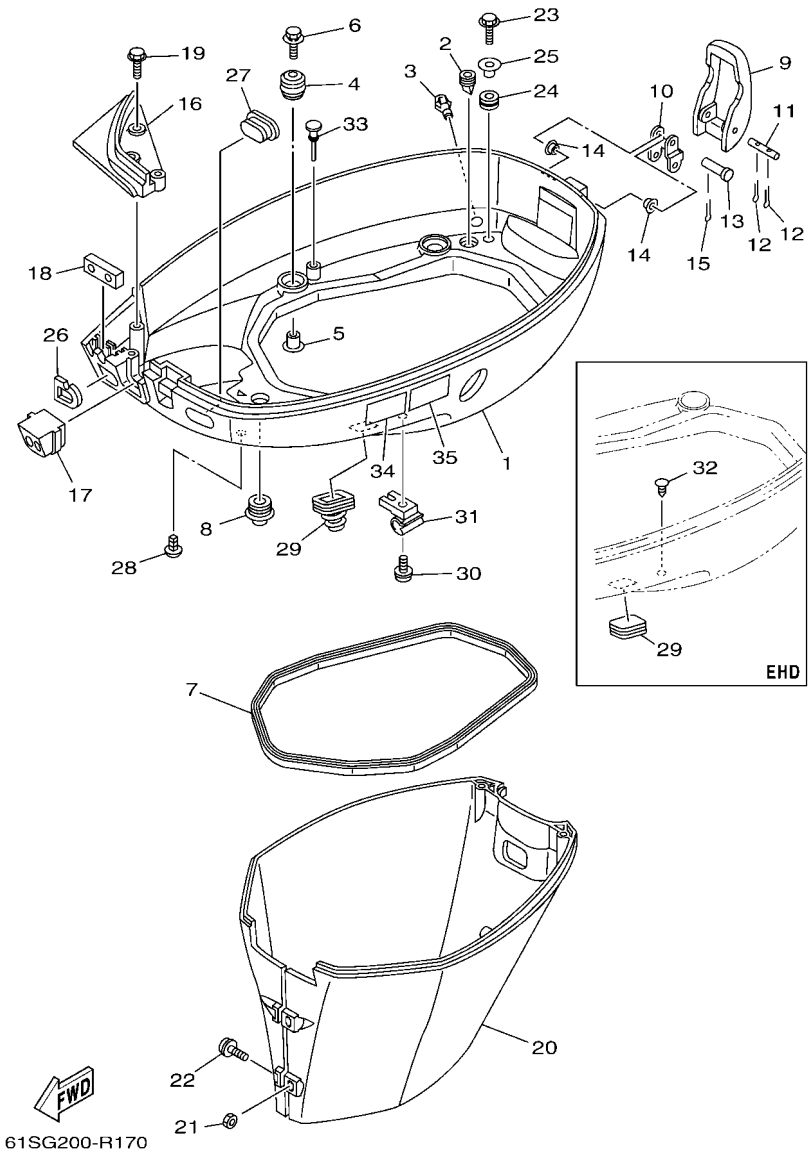

FIG. 17 BOTTOM COWLING — CUBIERTA INFERIOR

REF. NO.	PART NO. CODIGO Nº	DESCRIPTION DESCRIPCION	EHD	ET				REMARKS OBSERVACIONES
1	62Y–42711–04–8D	COWLING, BOTTOM 1 CUBIERTA INFERIOR 1	1					
	62Y–42711–14–8D	COWLING, BOTTOM 1 CUBIERTA INFERIOR 1		1				
2	65W–42717–00	RUBBER, SEAL 2 GOMA	4	4				
3	6BL–44391–00	NIPPLE, HOSE NIPLE MANGUERA	1	1				
4	6BG–42748–00	GROMMET TAPON	4	4				
5	90387–06M69	COLLAR ESPACIADOR	4	4				
6	90119–06M61	BOLT, WITH WASHER TORNILLO CON ARANDELA	4	4				
7	62Y–42716–00	RUBBER SEAL 1 SELLO DE GOMA 1	1	1				
8	6E5–42724–00	GROMMET TAPON	1	1				
9	62Y–42828–00–8D	PLATE, CLAMP PLACA, GRAMPA	1	1				
10	62Y–42815–00	LEVER, CLAMP 1 PALANCA ABRAZADERA 1	1	1				
11	90249–05M30	PIN PASADOR	1	1				
12	91490–16010	PIN. COTTER CHAVETA	2	2				
13	90240–05M19	PIN, CLEVIS PASADOR CON HOYO	1	1				
14	90386–05002	BUSH BUJE	2	2				
15	91490–16010	PIN. COTTER CHAVETA	1	1				
16	62Y–42738–01–8D	PLATE, FITTING PLACA DE AJUSTE	1	1				
17	62Y–42725–20	GROMMET TAPON	1					
	62Y–42725–30	GROMMET TAPON		1				
18	64J–42727–00	GROMMET TAPON	1					
	62Y–42727–00	GROMMET TAPON		1				
19	97595–06520	BOLT, WITH WASHER PERNO CON ARANDELA	3	3				
20	62Y–42741–00–8D	APRON MANDIL	1	1				
21	95380–06600	NUT, HEXAGON TUERCA	2	2				
22	97980–06325	SCREW, WITH WASHER TORNILLO, CON ARANDELA	2	2				
23	90109–06M80	BOLT PERNO	2	2				
24	90480–13M24	GROMMET TAPON	2	2				

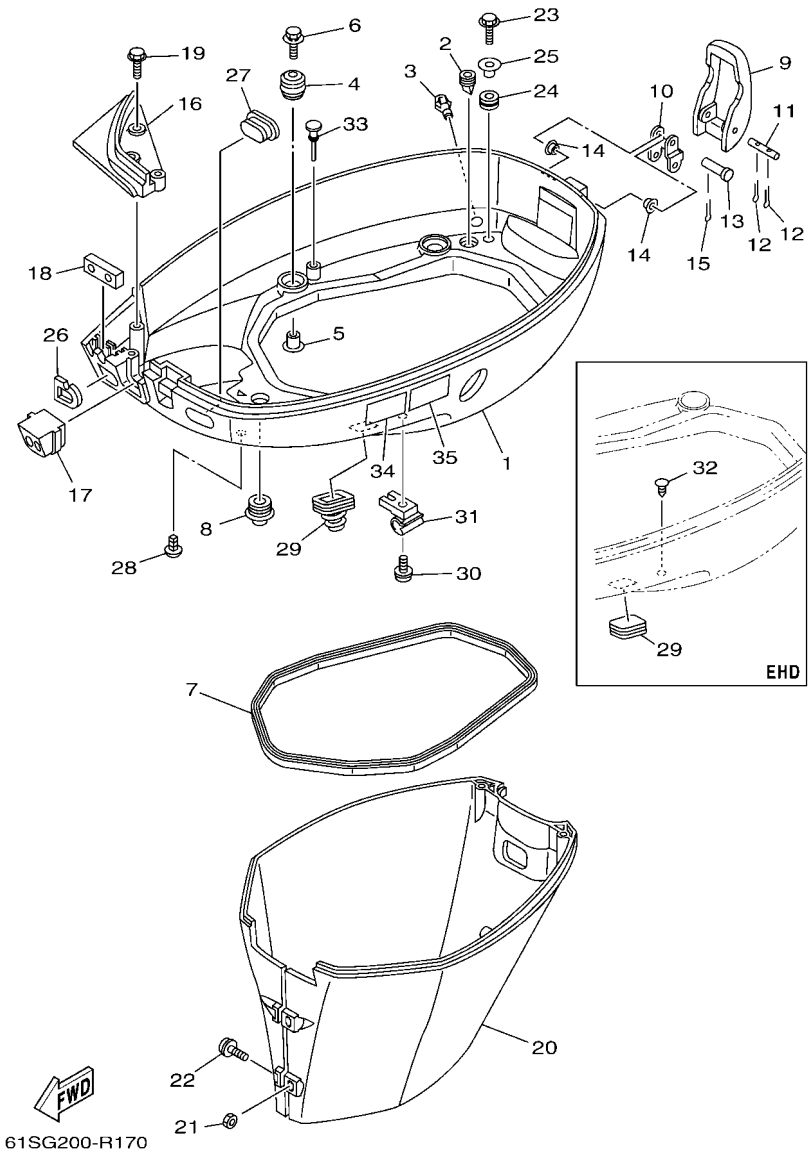

FIG. 17 BOTTOM COWLING — CUBIERTA INFERIOR

REF. NO.	PART NO. CODIGO Nº	DESCRIPTION DESCRIPCION	EHD	ET				REMARKS OBSERVACIONES
25	90387–06M43	COLLAR ESPACIADOR	2	2				
26	61N–24329–00	SEAL SELLO	1	1				
27	6H3–42727–00	GROMMET TAPON		1				
28	90338–05M03	PLUG TAPON	1	1				
29	6H4–42726–00	GROMMET TAPON	1					
	688–42726–10	GROMMET TAPON		1				
30	97980–06325	SCREW, WITH WASHER TORNILLO, CON ARANDELA		1				
31	90464–09M43	CLAMP BRIDA		1				
32	90338–05M03	PLUG TAPON	1					
33	62Y–42748–00	GROMMET TAPON	1	1				
34	6EE–42794–40	LABEL, WARNING (GENERAL) ETIQUETA DE PRECAUCION	1	1				
35	6EE–42794–50	LABEL, WARNING (GENERAL) ETIQUETA DE PRECAUCION	1	1				FOR CAR(CE) FOR CAR(CE)

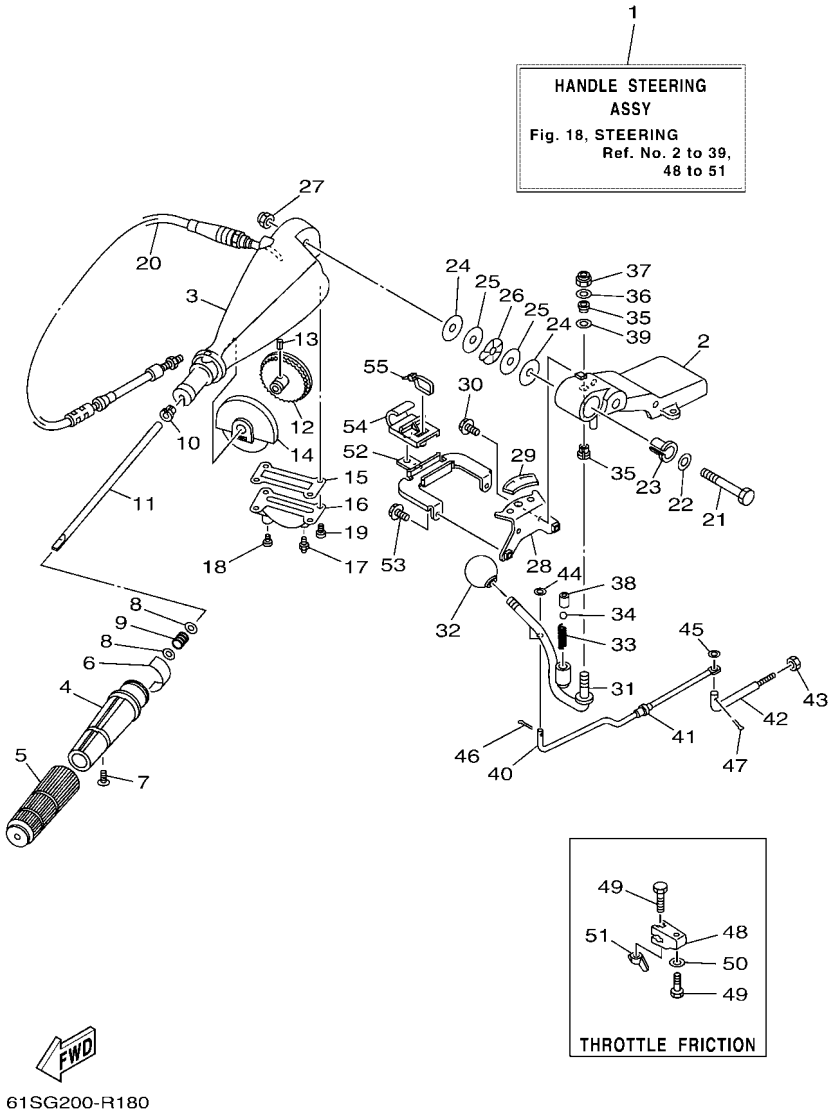

FIG. 18 STEERING — DIRECCION

REF. NO.	PART NO. CODIGO Nº	DESCRIPTION DESCRIPCION	EHD	ET				REMARKS OBSERVACIONES
1	64J–W0084–01–8D	HANDLE STEERING ASSY CONJUNTO DE MANIJA	1					
2	692–42121–02–8D	BRACKET SOPORTE	1					
3	692–42111–12–8D	HANDLE, STEERING MANIJA DE DIRECCION	1					
4	664–42119–00	GRIP, STEERING HANDLE MANGO, MANIJA DE DIRRECCION	1					
5	6G1–42177–00	RUBBER, HANDLE HULE DE MANIJA	1					
6	61U–42137–00	INDICATOR, THROTTLE INDICADOR ACELERADOR	1					
7	90152–05011	SCREW, COUNTERSUNK TORNILLO EMBUTIDO	1					
8	90201–10M02	WASHER, PLATE ARANDELA PLANA	2					
9	90501–23215	SPRING, COMPRESSION RESORTE DE COMPRESION	1					
10	90386–08032	BUSH BUJE	1					
11	692–42115–00	SHAFT, STEERING HANDLE EJE MANIJA DE DIRECCION	1					
12	663–42138–00	LEVER, THROTTLE PLANCA DE ACELERACION	1					
13	90254–03003	PIN, SPRING PASADOR DE TIPO A RESORTE	1					
14	692–42135–00	HOUSING, THROTTLE LEVER CAJA PALANCA ACELERADOR	1					
15	663–42133–01	GASKET EMPAQUE	1					
16	692–42134–03–8D	COVER, THROTTLE LEVER CUBIERTA PALANCA ACELERADOR	1					
17	93700–06M03	NIPPLE, GREASE BOQUILLA DE ENGRASAR	1					
18	97885–06008	SCREW, PAN HEAD TORNILLO A MUESCA	1					
19	97885–05012	SCREW, PAN HEAD TORNILLO A MUESCA	4					
20	692–26301–03	THROTTLE CABLE ASSY CABLE DE ACELERADOR COMPLETO	1					
21	90101–12M06	BOLT TORNILLO	1					
22	92990–12200	WASHER, PLAIN ARANDELA PLANA	1					
23	90386–12089	BUSH BUJE	1					
24	90202–12092	WASHER, PLATE ARANDELA DE PLANA	2					
25	90201–12537	WASHER, PLATE ARANDELA PLANA	2					
26	90206–12054	WASHER, WAVE ARANDELA ONDULADA	1					
27	90185–12058	NUT, SELF-LOCKING TUERCA AUTOBLOCANTE	1					

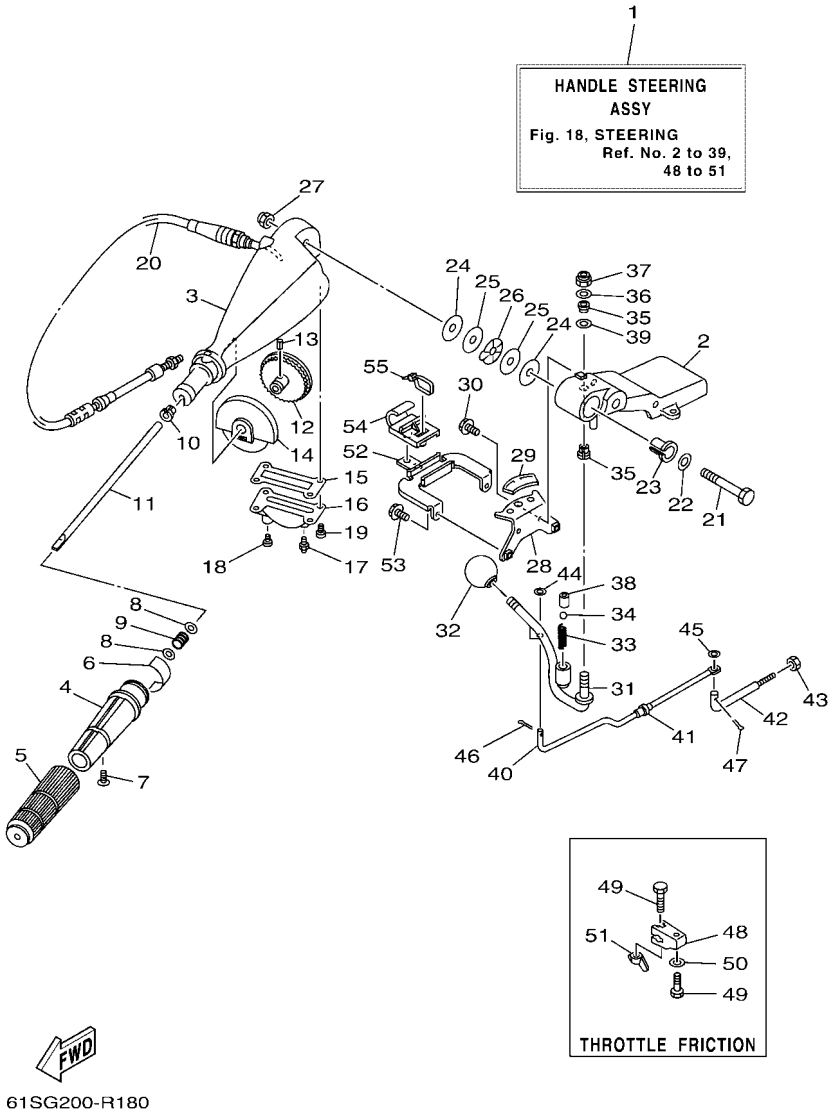

FIG. 18 STEERING — DIRECCION

REF. NO.	PART NO. CODIGO Nº	DESCRIPTION DESCRIPCION	EHD	ET				REMARKS OBSERVACIONES
28	64J–44113–00	CAM PLATE, HANDLE PLACA DE LA LEVA DEL MANGO	1					
29	6K5–44191–00	INDICATOR, SHIFT INDICADOR DE CAMBIOS	1					
30	97513–06516	BOLT, WITH WASHER PERNO CON ARANDELA	2					
31	692–44159–01	HANDLE, GEAR SHIFT MANIJA DE CAMBIO DE MARCHAS	1					
32	663–44173–00	LEVER, SHIFT CONTROL PALANCA CONTROL CAMBIOS	1					
33	90501–16M17	SPRING, COMPRESSION RESORTE DE COMPRESION	1					
34	93515–32M01	BALL ESFERA	1					
35	90386–10009	BUSH BUJE	2					
36	90201–10120	WASHER, PLATE ARANDELA PLANA	1					
37	90185–10027	NUT, SELF-LOCKING TUERCA AUTOBLOCANTE	1					
38	90387–12M30	COLLAR ESPACIADOR	1					
39	90201–12M34	WASHER, PLATE ARANDELA PLANA	1					
40	64J–42191–00	ROD 1 VARILLA 1	1					
41	90386–06088	BUSH BUJE	1					
42	64J–42192–00	ROD 2 VARILLA 2	1					
43	700–48339–00	NUT, CABLE END TUERCA TERMINAL	1					
44	92990–06600	WASHER, PLATE ARANDELA PLANA	1					
45	92990–06600	WASHER, PLATE ARANDELA PLANA	1					
46	91490–25012	PIN. COTTER CHAVETA	1					
47	91490–25012	PIN. COTTER CHAVETA	1					
48	663–42126–01	FRICTION, STEERING HANDLE GRIP FRICCION DE MANGO DIRECCION	1					
49	90101–06M27	BOLT TORNILLO	2					
50	92990–06600	WASHER, PLATE ARANDELA PLANA	1					
51	90175–06003	NUT, WING TUERCA MARIPOSA	1					
52	64J–24364–00	STAY SOPORTE	1					
53	97513–06516	BOLT, WITH WASHER PERNO CON ARANDELA	2					
54	63D–24367–00	CLAMP, FUEL PIPE 2 GRAMPA DE TUBO DE COMBUST.2	1					

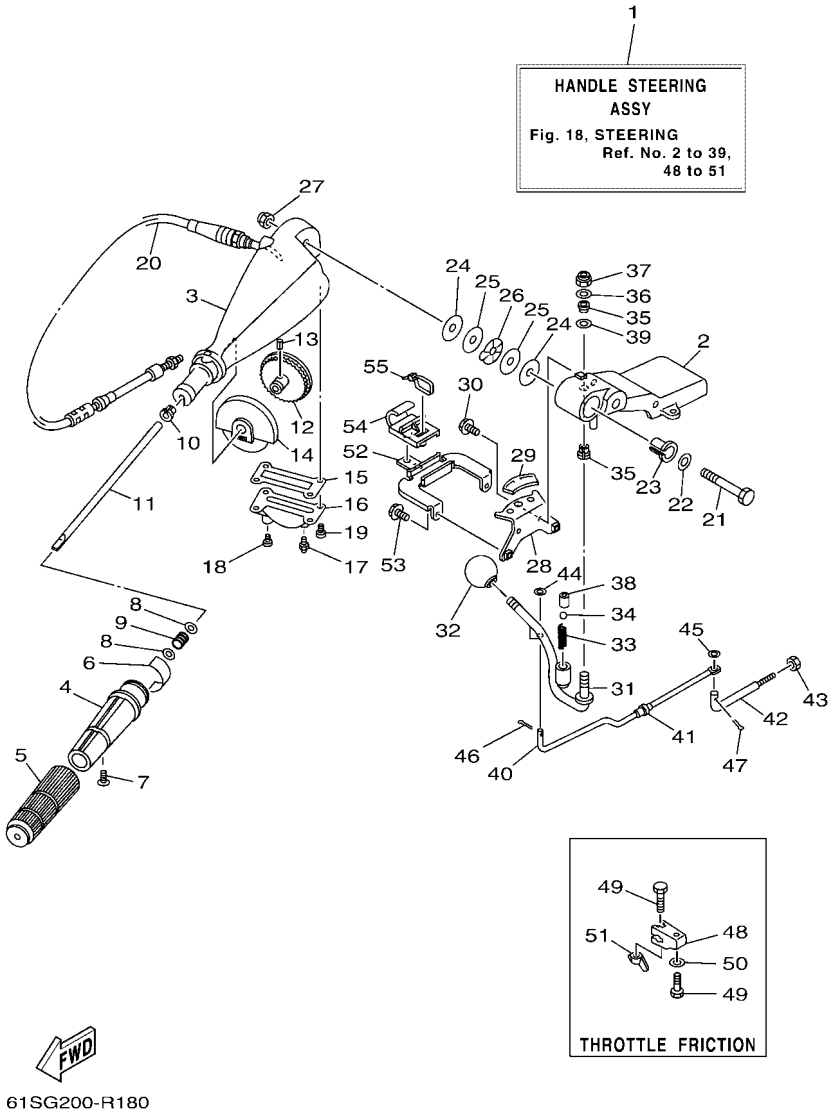

FIG. 18 STEERING — DIRECCION

REF. NO.	PART NO. CODIGO Nº	DESCRIPTION DESCRIPCION	EHD	ET				REMARKS OBSERVACIONES
55	90465–13M39	CLAMP BRIDA	2					

FIG. 19 STEERING FRICTION — FRICCION DE DIRECCION

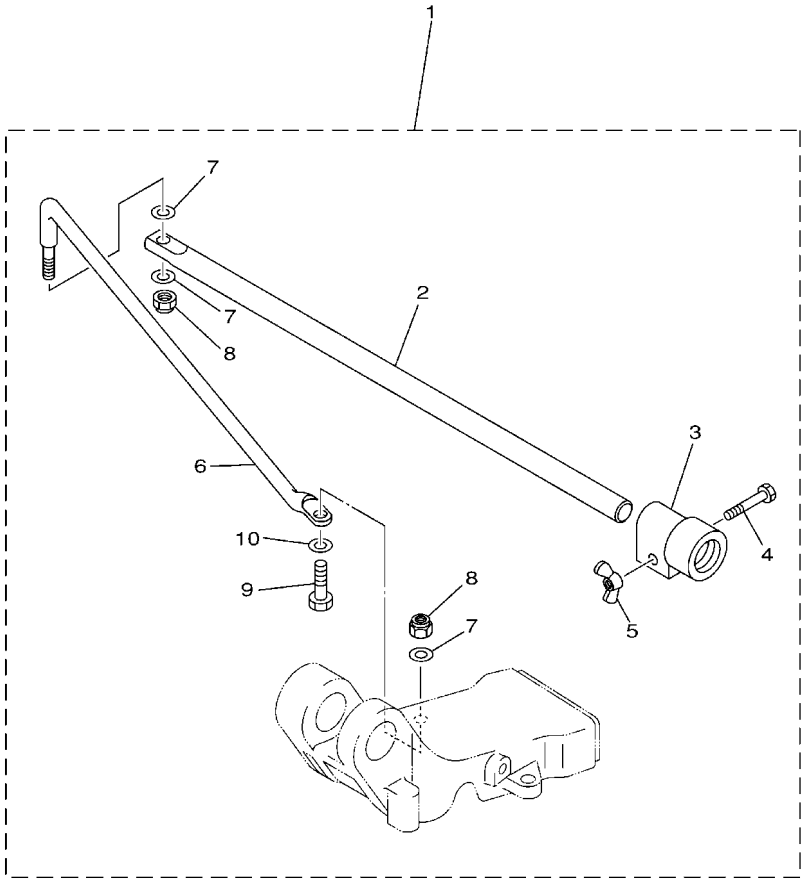

62Y0200-1200

REF. NO.	PART NO. CODIGO Nº	DESCRIPTION DESCRIPCION	EHD	ET				REMARKS OBSERVACIONES
1	64J–42508–00	STEERING FRICTION ASSY DIRECCION FRICCION COMP.	1					
2	64J–42518–00	.SHAFT, FRICTION .EJE FRICCION	1					
3	67G–42528–00	.PLATE, FRICTION .PIEZA DE FRICCION	1					
4	97080–06035	.BOLT .PERNO	1					
5	90175–06003	.NUT, WING .TUERCA MARIPOSA	1					
6	64J–42515–00	.ROD, STEERING LINK .VARILLA ESLABON DIRECCION	1					
7	92990–08600	.WASHER, PLATE .ARANDELA PLANA	3					
8	90185–08057	.NUT, SELF-LOCKING .TUERCA AUTOBLOCANTE	2					
9	97095–08030	.BOLT .PERNO	1					
10	92995–08600	.WASHER .ARANDELA	1					

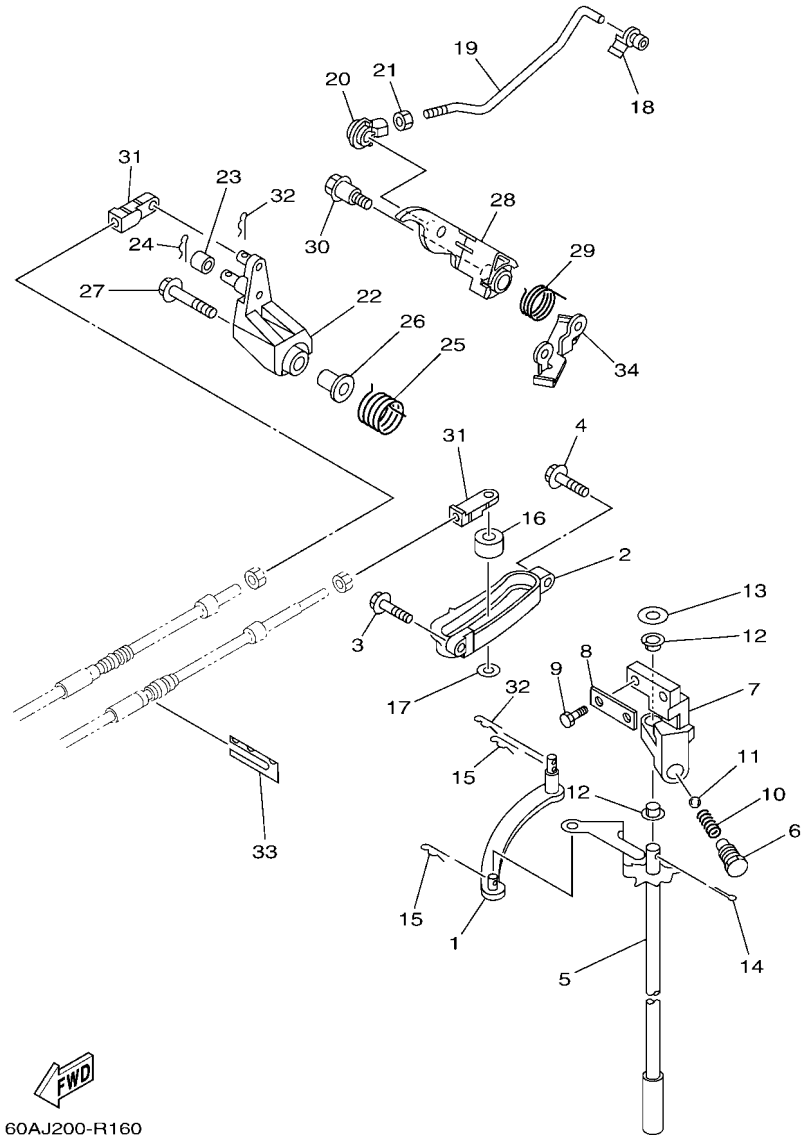

FIG. 20 CONTROL — CONTROL

REF. NO.	PART NO. CODIGO Nº	DESCRIPTION DESCRIPCION	EHD	ET				REMARKS OBSERVACIONES
1	69W–44121–00	LEVER, SHIFT ROD PALANCA VARILLA CAMBIOS	1	1				
2	62Y–44117–01	BRACKET SOPORTE	1	1				
3	97595–06520	BOLT, WITH WASHER PERNO CON ARANDELA	1	1				
4	97595–06525	BOLT, WITH WASHER PERNO CON ARANDELA	1	1				
5	62Y–44120–02	HANDLE GEAR SHIFT ASSY MANIJA DE CAMBIO COMPL	1	1				L(21.1") L(21.1")
	62Y–44120–22	HANDLE GEAR SHIFT ASSY MANIJA DE CAMBIO COMPL	1	1				X(25.5") X(25.5")
6	62Y–42715–01	BUSHING BUJE	1	1				
7	62Y–44118–00–94	BRACKET SOPORTE	1	1				
8	62Y–44112–00	STAY, HANDLE GEAR SHIFT SOPORTE HANIJA DE CABIO DE MAR		1				
9	90101–06054	BOLT TORNILLO	2	2				
10	90501–12082	SPRING, COMPRESSION RESORTE DE COMPRESION	1	1				
11	93501–04M02	BALL BOLA	1	1				
12	90386–90M90	BUSH BUJE	2	2				
13	90201–10M20	WASHER, PLATE ARANDELA PLANA	1	1				
14	91490–20015	PIN. COTTER CHAVETA	1	1				
15	90468–18008	CLIP PRESILLA	2	2				
16	688–44122–00	BUSHING, SHIFT ROD LEVER BUJE PALANCA VARILLA DE CAMBIO	1	1				
17	90202–07M07	WASHER, PLATE ARANDELA DE PLANA	1	1				
18	6F5–41237–00	JOINT, LINK CONECTOR	1	1				
19	62Y–41241–00	ROD, LINK VARILLA	1	1				
20	662–41237–01	JOINT, LINK CONECTOR	1	1				
21	95380–05700	NUT TUERCA	1	1				
22	62Y–42154–00	LEVER, THROTTLE CONTROL PALANCA CONTROL ACELERADOR	1	1				
23	62Y–42171–00	BUSHING BUJE	1	1				
24	91490–16010	PIN. COTTER CHAVETA	1	1				
25	62Y–44135–00	SPRING RESORTE	1	1				
26	90387–06M45	COLLAR ESPACIADOR	1	1				

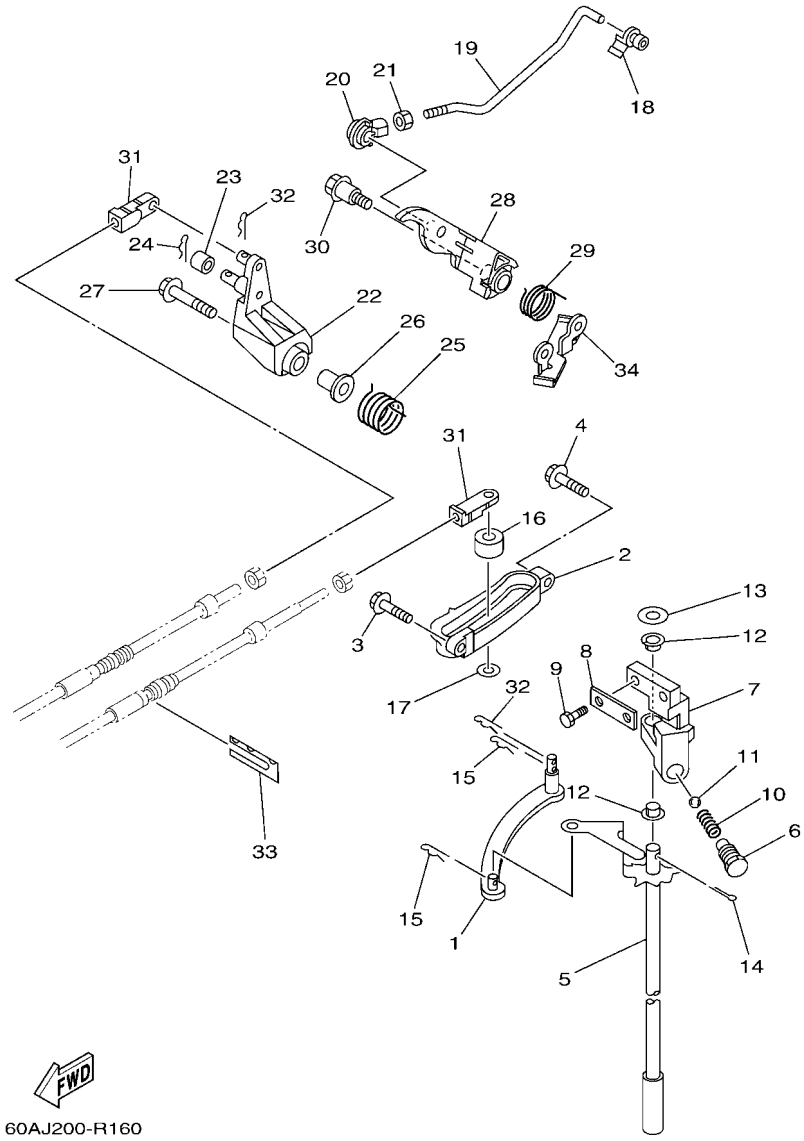

FIG. 20 CONTROL — CONTROL

REF. NO.	PART NO. CODIGO Nº	DESCRIPTION DESCRIPCION	EHD	ET				REMARKS OBSERVACIONES
27	95895–06035	BOLT, FLANGE TORNILLO DE REBORDE	1	1				
28	62Y–42335–20	LEVER, ACCEL. CONTROL PALANCA ACELERADOR CONTROL	1	1				
29	62Y–44116–01	SPRING RESORTE	1	1				
30	90109–06M30	BOLT PERNO	1	1				
31	6G8–26363–00	END, WIRE 1 EXTREMO DE CABLE	2	2				
32	90468–18008	CLIP PRESILLA	2	2				
33	64J–48538–00	CLAMP, CABLE 1 GRAMPA DE CABLE	1					
	62Y–48538–00	CLAMP, CABLE 1 GRAMPA DE CABLE		1				
34	62Y–42159–01	STAY SOPORTE	1	1				

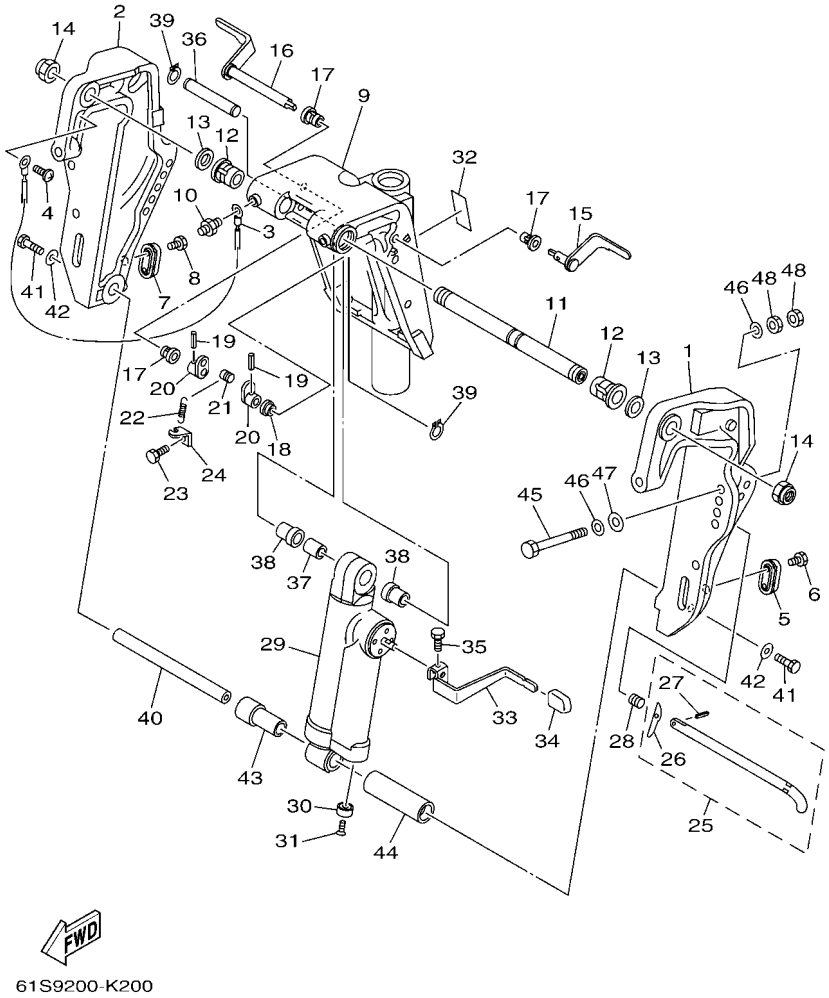

FIG. 21 BRACKET 1 — SOPORTE 1

REF. NO.	PART NO. CODIGO Nº	DESCRIPTION DESCRIPCION	EHD	ET				REMARKS OBSERVACIONES
1	62Y–43111–00–8D	BRACKET, CLAMP 1 SOPORTE DE LA ABRAZADERA 1	1					L(21.1") L(21.1")
	69W–43111–00–8D	BRACKET, CLAMP 1 SOPORTE DE LA ABRAZADERA 1	1					X(25.5") X(25.5")
2	62Y–43112–00–8D	BRACKET, CLAMP 2 SOPORTE DE LA ABRAZADERA 2	1					L(21.1") L(21.1")
	69W–43112–00–8D	BRACKET, CLAMP 2 SOPORTE DE LA ABRAZADERA 2	1					X(25.5") X(25.5")
3	63D–82148–00	WIRE, LEAD 4 CABLE CONDUCTOR 4	1					
4	97885–06008	SCREW, PAN HEAD TORNILLO A MUESCA	1					
5	65W–45251–00	ANODE CATODE	1					
6	90101–06020	BOLT TORNILLO	2					
7	65W–45251–00	ANODE CATODE	1					
8	90101–06020	BOLT TORNILLO	2					
9	63D–43311–13–8D	BRACKET, SWIVEL 1 SOPORTE GIRATORIO 1	1					
10	93700–06M03	NIPPLE, GREASE BOQUILLA DE ENGRASAR	3					
11	63D–43131–01	BOLT, CLAMP BRACKET TORNILLO DE ABRAZADERA DEL SOP	1					
12	90386–22M15	BUSH BUJE	2					
13	90201–22M03	WASHER, PLATE ARANDELA PLANA	2					
14	90185–22M11	NUT, SELF-LOCKING TUERCA AUTOBLOCANTE	2					
15	6H5–43181–03	LEVER, TILT STOP 1 PALANCA TOPE INCLINACION 1	1					
16	6H5–43185–03	LEVER, TILT STOP 2 PALANCA TOPE INCLINACION 2	1					
17	90386–10M16	BUSH BUJE	3					
18	90386–10025	BUSH BUJE	1					
19	91690–30020	PIN, SPRING PASADOR DE RESORTE	2					
20	6G5–43148–00	COLLAR, DISTANCE COLLAR	2					
21	90249–06M19	PIN PASADOR	1					
22	90506–14M24	SPRING, TENSION RESORTE DE TENSION	1					
23	97095–06010	BOLT PERNO	1					
24	6G5–43144–00	HOOK, SPRING GANCHO	1					
25	688–43160–01	TILT ROD ASSY VARILLA DE BASCULACION COMPL.	1					

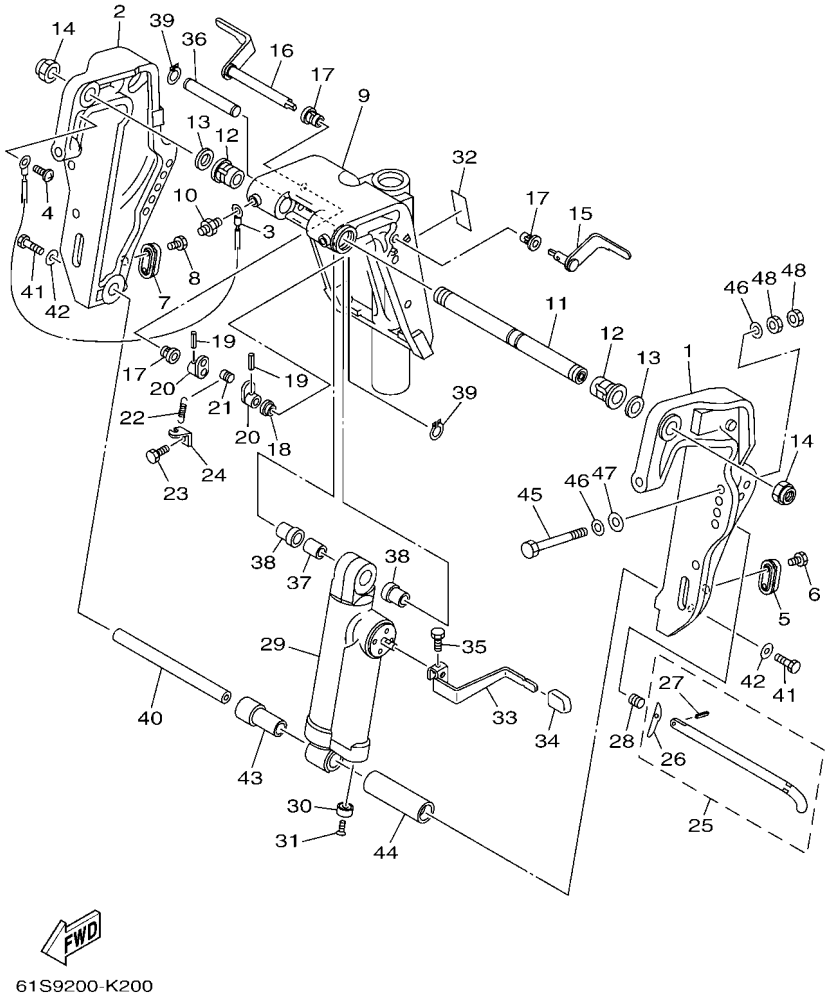

FIG. 21 BRACKET 1 — SOPORTE 1

REF. NO.	PART NO. CODIGO Nº	DESCRIPTION DESCRIPCION	EHD	ET				REMARKS OBSERVACIONES
26	688–43165–00	.PLATE, TILT LOCK .PLACA DE TOPE, VARILLA SEGURID	1					
27	91690–30012	.PIN, SPRING .PASADOR DE RESORTE	1					
28	90502–16M02	SPRING, CONICAL RESORTE CONICO	1					
29	62Y–43107–22–8D	SHOCK ABSORBER SUB-ASSY AMORTIGUADOR COMPL	1					L(21.1") L(21.1")
	64J–43107–02–8D	SHOCK ABSORBER SUB-ASSY AMORTIGUADOR COMPL	1					X(25.5") X(25.5")
30	663–45251–00	ANODE CATODE	1					
31	90152–06M01	SCREW, COUNTERSUNK TORNILLO EMBUTIDO	1					
32	63D–43691–00	INDICATOR, TILT INDICADOR	1					
33	69D–43631–00	LEVER, TILT PALANCA DE INCLINACION	1					
34	682–43318–01	COVER CUBIERTA	1					
35	97095–06010	BOLT PERNO	1					
36	69D–43126–01	PIN, UPPER SHOCK MOUNT PASADOR DE AMORTIGUADOR SUPERI	1					
37	90387–16003	COLLAR ESPACIADOR	1					
38	90387–16004	COLLAR ESPACIADOR	2					
39	93410–16097	CIRCLIP SEGURO	2					
40	62Y–43818–00	PIN, LOWER SHOCK MOUNT PASADOR AMORTIGUADOR INFERIOR	1					
41	97080–08016	BOLT PERNO	2					
42	90201–08M04	WASHER, PLATE ARANDELA PLANA	2					
43	90387–18002	COLLAR ESPACIADOR	1					
44	90387–18003	COLLAR ESPACIADOR	1					
45	90101–12M65	BOLT TORNILLO	4					
46	90201–12062	WASHER, PLATE ARANDELA PLANA	8					
47	90201–12426	WASHER, PLATE ARANDELA PLANA	4					
48	95380–12600	NUT TUERCA	8					

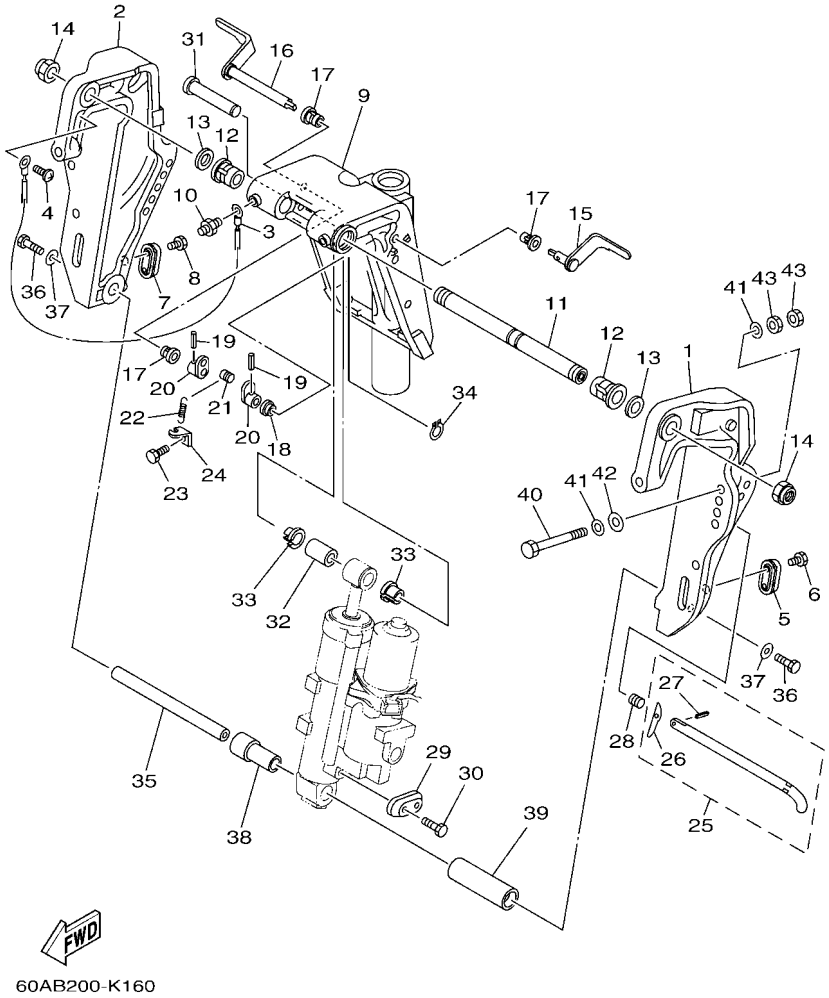

FIG. 22 BRACKET 2 — SOPORTE 2

REF. NO.	PART NO. CODIGO Nº	DESCRIPTION DESCRIPCION	EHD	ET				REMARKS OBSERVACIONES
1	62Y–43111–00–8D	BRACKET, CLAMP 1 SOPORTE DE LA ABRAZADERA 1		1				L(21.1") L(21.1")
	69W–43111–00–8D	BRACKET, CLAMP 1 SOPORTE DE LA ABRAZADERA 1		1				X(25.5") X(25.5")
2	62Y–43112–00–8D	BRACKET, CLAMP 2 SOPORTE DE LA ABRAZADERA 2		1				L(21.1") L(21.1")
	69W–43112–00–8D	BRACKET, CLAMP 2 SOPORTE DE LA ABRAZADERA 2		1				X(25.5") X(25.5")
3	63D–82148–00	WIRE, LEAD 4 CABLE CONDUCTOR 4		1				
4	97885–06008	SCREW, PAN HEAD TORNILLO A MUESCA		1				
5	65W–45251–00	ANODE CATODE		1				
6	90101–06020	BOLT TORNILLO		2				
7	65W–45251–00	ANODE CATODE		1				
8	90101–06020	BOLT TORNILLO		2				
9	63D–43311–13–8D	BRACKET, SWIVEL 1 SOPORTE GIRATORIO 1		1				
10	93700–06M03	NIPPLE, GREASE BOQUILLA DE ENGRASAR		3				
11	63D–43131–01	BOLT, CLAMP BRACKET TORNILLO DE ABRAZADERA DEL SOP		1				
12	90386–22M15	BUSH BUJE		2				
13	90201–22M03	WASHER, PLATE ARANDELA PLANA		2				
14	90185–22M11	NUT, SELF-LOCKING TUERCA AUTOBLOCANTE		2				
15	6H5–43181–03	LEVER, TILT STOP 1 PALANCA TOPE INCLINACION 1		1				
16	6H5–43185–03	LEVER, TILT STOP 2 PALANCA TOPE INCLINACION 2		1				
17	90386–10M16	BUSH BUJE		3				
18	90386–10025	BUSH BUJE		1				
19	91690–30020	PIN, SPRING PASADOR DE RESORTE		2				
20	6G5–43148–00	COLLAR, DISTANCE COLLAR		2				
21	90249–06M19	PIN PASADOR		1				
22	90506–14M24	SPRING, TENSION RESORTE DE TENSION		1				
23	97095–06010	BOLT PERNO		1				
24	6G5–43144–00	HOOK, SPRING GANCHO		1				
25	688–43160–01	TILT ROD ASSY VARILLA DE BASCULACION COMPL.		1				

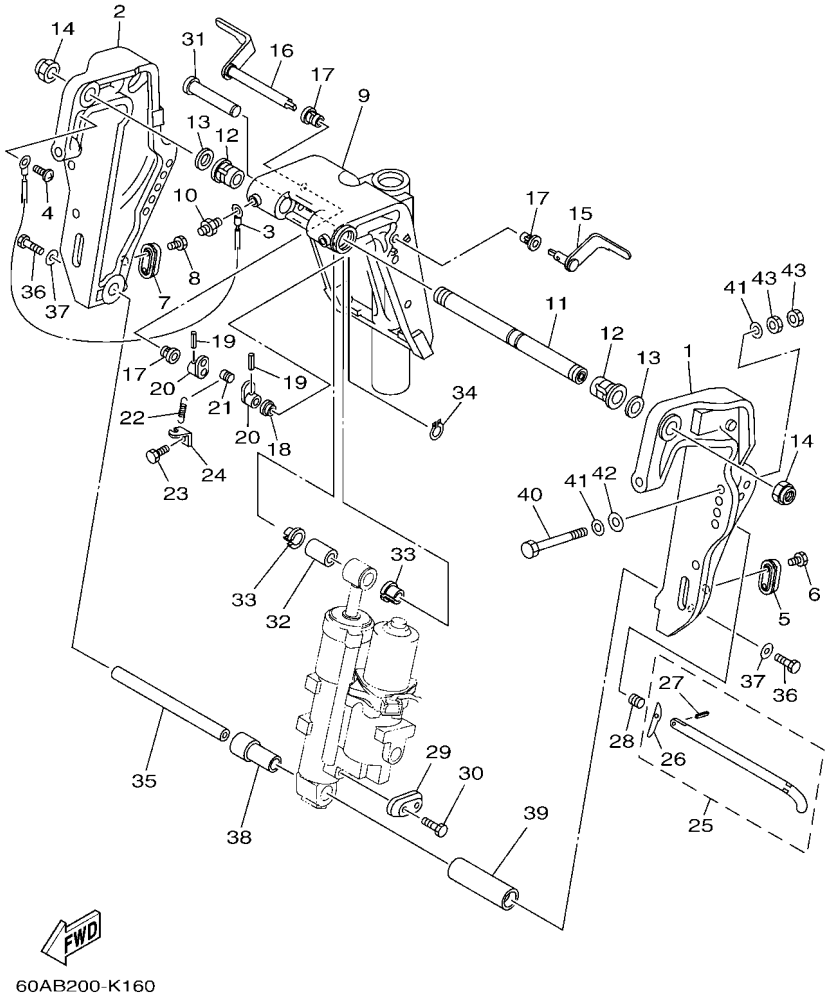

FIG. 22 BRACKET 2 — SOPORTE 2

REF. NO.	PART NO. CODIGO Nº	DESCRIPTION DESCRIPCION	EHD	ET				REMARKS OBSERVACIONES
26	688–43165–00	.PLATE, TILT LOCK .PLACA DE TOPE, VARILLA SEGURID		1				
27	91690–30012	.PIN, SPRING .PASADOR DE RESORTE		1				
28	90502–16M02	SPRING, CONICAL RESORTE CONICO		1				
29	65W–45251–00	ANODE CATODE		1				
30	90101–06020	BOLT TORNILLO		2				
31	6E5–43126–02	PIN, UPPER SHOCK MOUNT PASADOR DE AMORTIGUADOR SUPERI		1				
32	90386–18M92	BUSH BUJE		1				
33	90386–18M35	BUSH BUJE		2				
34	93410–18M05	CIRCLIP SEGURO		1				
35	62Y–43818–00	PIN, LOWER SHOCK MOUNT PASADOR AMORTIGUADOR INFERIOR		1				
36	97080–08016	BOLT PERNO		2				
37	90201–08M04	WASHER, PLATE ARANDELA PLANA		2				
38	90387–18002	COLLAR ESPACIADOR		1				
39	90387–18003	COLLAR ESPACIADOR		1				
40	90101–12M65	BOLT TORNILLO		4				
41	90201–12062	WASHER, PLATE ARANDELA PLANA		8				
42	90201–12426	WASHER, PLATE ARANDELA PLANA		4				
43	95380–12600	NUT TUERCA		8				

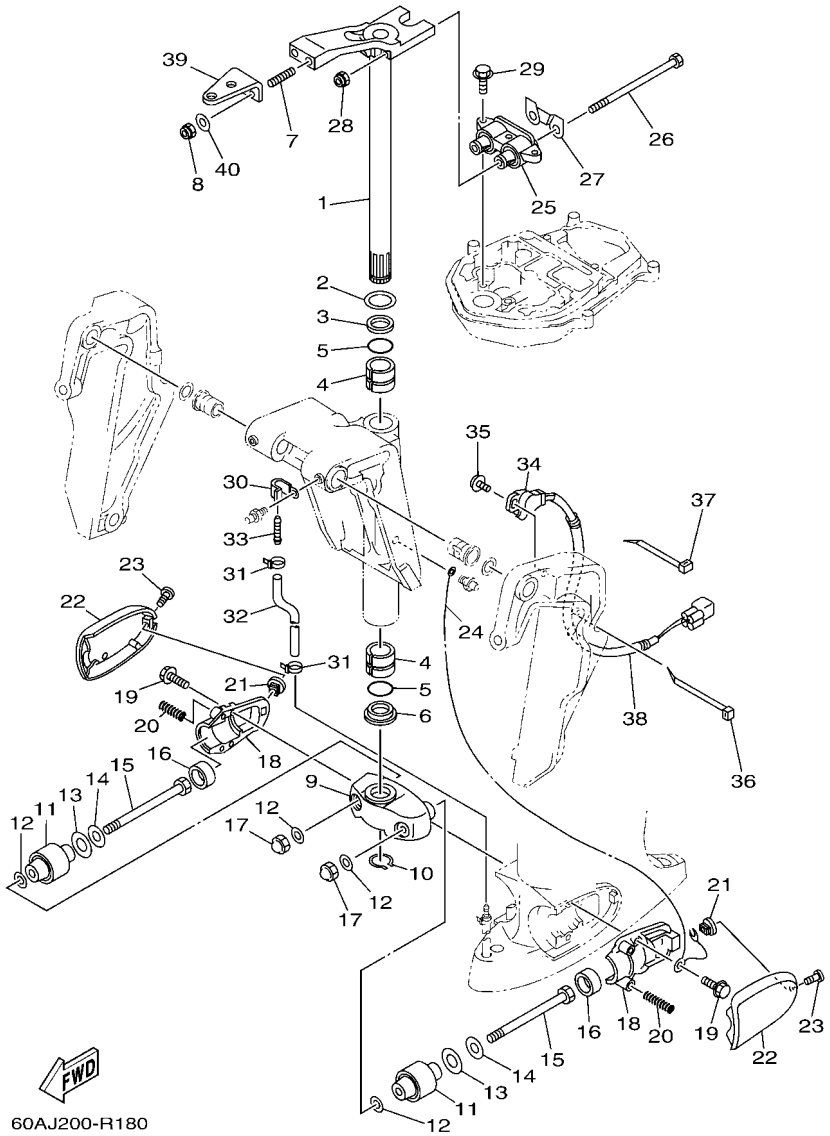

FIG. 23 BRACKET 3 — SOPORTE 3

REF. NO.	PART NO. CODIGO Nº	DESCRIPTION DESCRIPCION	EHD	ET				REMARKS OBSERVACIONES
1	63D–42510–12–8D	STEERING BRACKET ASSY SOPORTE DIRECCION COMPL.	1	1				
2	90201–30M00	WASHER, PLATE ARANDELA PLANA	1	1				
3	90386–30M78	BUSH BUJE	1	1				
4	90386–30M77	BUSH BUJE	2	2				
5	93210–29M94	O-RING ANILLO O	2	2				
6	90386–30M60	BUSH BUJE	1	1				
7	90116–10063	BOLT, STUD ESPARRAGO	2					
	90116–10062	BOLT, STUD ESPARRAGO		2				
8	90185–10027	NUT, SELF-LOCKING TUERCA AUTOBLOCANTE	2	2				
9	663–44551–02–8D	HOUSING, LOWER MOUNT RUBBER 1 CAJA AMORTIGUADOR INFERIOR HU	1	1				
10	93410–28M06	CIRCLIP SEGURO	1	1				
11	62Y–44555–00	MOUNT DAMPER, LOWER SIDE AMORTIGUADOR DE HULE LADO INFE	2	2				
12	90201–12M16	WASHER, PLATE ARANDELA PLANA	4	4				
13	90202–21100	WASHER, PLATE ARANDELA DE PLANA	2	2				
14	90201–13M19	WASHER, PLATE ARANDELA PLANA	2	2				
15	90109–12261	BOLT PERNO	2	2				
16	663–44575–00	DAMPER, LOWER MOUNT RUBBER AMORTIGUADOR INFERIOR	2	2				L(21.1") L(21.1")
	64J–44575–00	DAMPER, LOWER MOUNT RUBBER AMORTIGUADOR INFERIOR	2	2				X(25.5") X(25.5")
17	95380–12800	NUT, CROWN TUERCA	2	2				
18	663–44552–01	HOUSING, LOWER MOUNT RUBBER 2 CAJA AMORTIGUADOR INFERIOR HU	2	2				
19	97575–08525	BOLT, WITH WASHER PERNO CON ARANDELA	4	4				
20	90501–14M08	SPRING, COMPRESSION RESORTE DE COMPRESION	4	4				
21	90179–06066	NUT TUERCA	2	2				
22	62Y–44553–01–8D	COVER, LOWER MOUNT CUBIERTA,AMORTIGUADOR INFERIOR	2	2				
23	97885–06016	SCREW, PAN HEAD TORNILLO A MUESCA	2	2				
24	697–82127–01	WIRE, LEAD 2 CABLE CONDUCTOR 2	1	1				
25	62Y–44514–10	MOUNT DAMPER, UPPER SIDE AMORTIGUADOR LADO SUPERIOR	1	1				L(21.1") L(21.1")

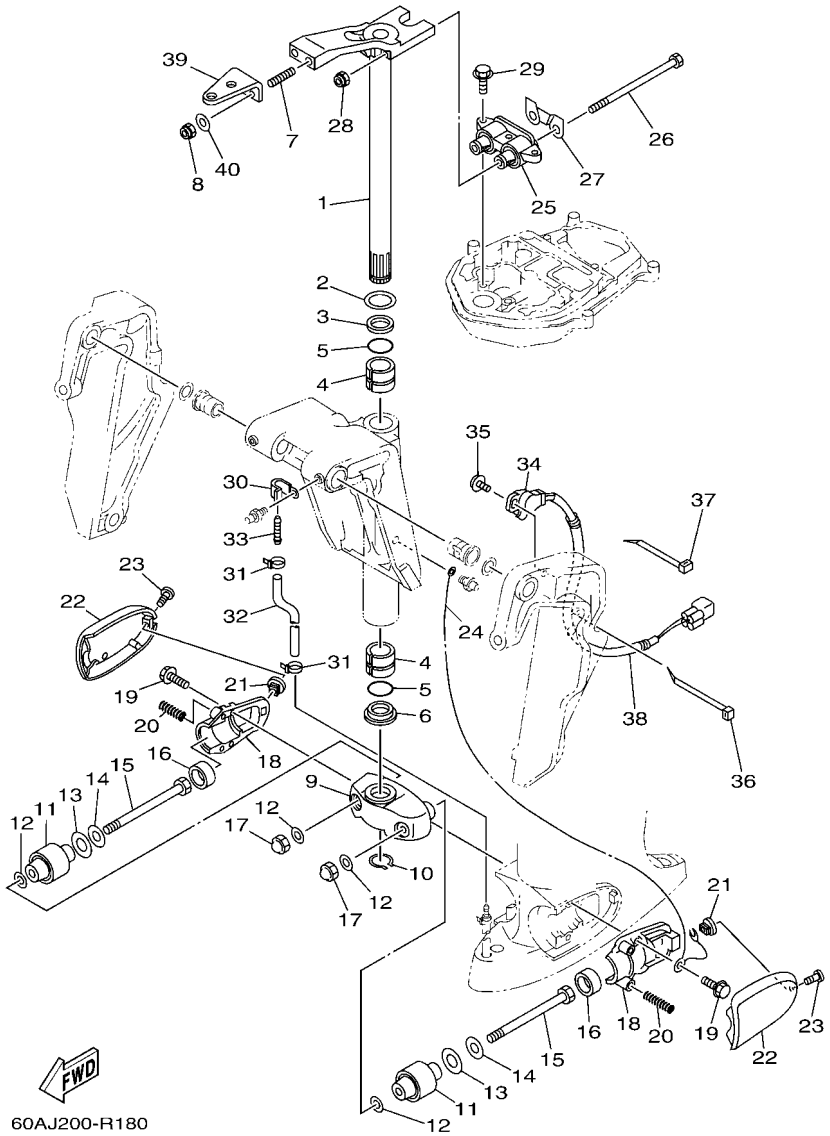

FIG. 23 BRACKET 3 — SOPORTE 3

REF. NO.	PART NO. CODIGO Nº	DESCRIPTION DESCRIPCION	EHD	ET				REMARKS OBSERVACIONES
25	64J–44514–00	MOUNT DAMPER, UPPER SIDE AMORTIGUADOR LADO SUPERIOR	1	1				X(25.5") X(25.5")
26	90109–08229	BOLT PERNO	2	2				
27	66T–44526–30	PLATE PLACA 1	1	1				L(21.1") L(21.1")
	69W–44526–01	PLATE PLACA 1	1	1				X(25.5") X(25.5")
28	90185–08018	NUT, SELF-LOCKING TUERCA AUTOBLOCANTE	2	2				
29	97575–08530	BOLT, WITH WASHER PERNO CON ARANDELA	3	3				
30	90465–06M86	CLAMP BRIDA	1	1				
31	90465–11M10	CLAMP BRIDA	2	2				
32	90445–07MF1	HOSE (L570) TUBO (L570)	1	1				
33	6E5–83558–00	END, NIPPLE EXTREMO DE NIPLE	1	1				
34	63D–83672–11	TRIM SENDER TRANSMISOR DE INCLINADOR		1				
35	97985–06216	SCREW, WITH WASHER TORNILLO, CON ARANDELA		2				
36	90465–13M18	CLAMP BRIDA		1				
37	90465–11M10	CLAMP BRIDA		1				
38	90446–17M91	HOSE TUBO RESEIRADERO		1				
39	63D–48511–01	HOOK, STEERING GANCHO DIRECCION		1				STEERING GUIDE STEERING GUIDE
40	90201–10049	WASHER, PLATE ARANDELA PLANA		2				

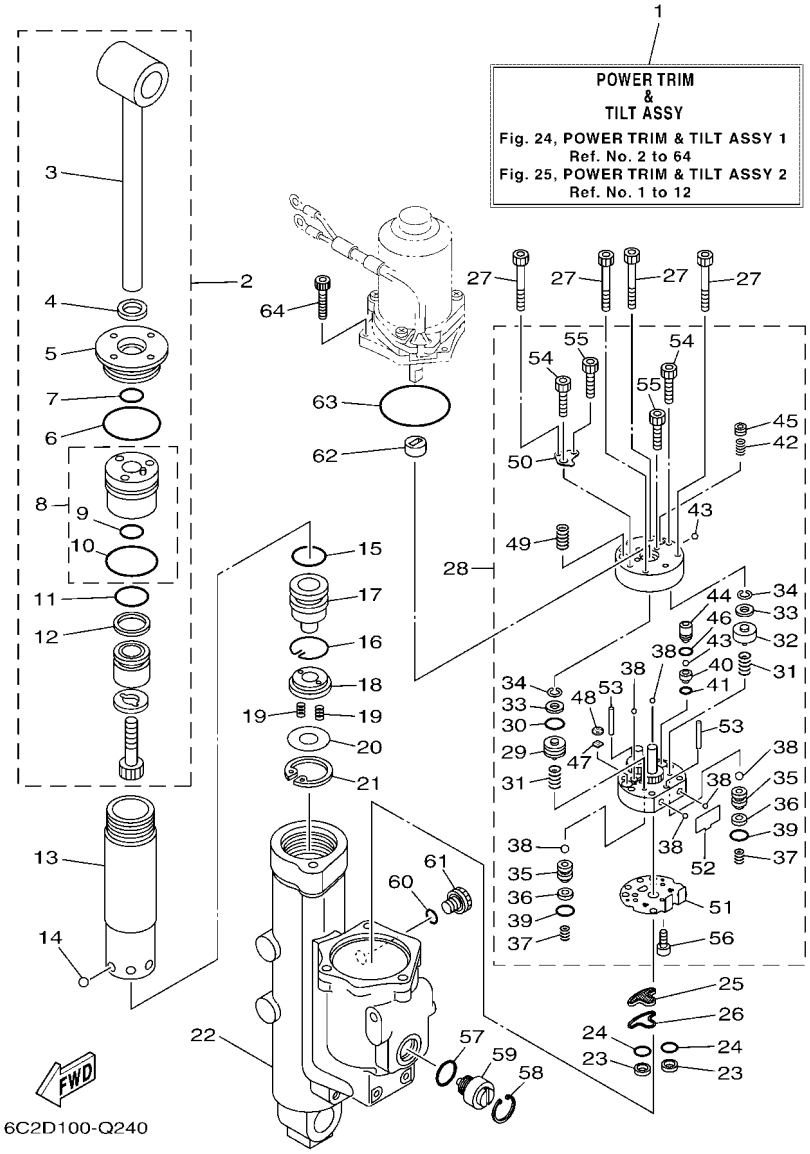

FIG. 24 POWER TRIM & TILT ASSY 1 — COMPONER Y PODER VARILLA 1

REF. NO.	PART NO. CODIGO Nº	DESCRIPTION DESCRIPCION	EHD	ET				REMARKS OBSERVACIONES
1	6C5–43800–12	POWER TRIM & TILT ASSY ELEVADOR HIDRAULICO COMPL.		1				
2	6CJ–43810–10	TILT PISTON SUB ASSY ELEVADOR SUB-PISTON COMPL.		1				
3	6CJ–43801–10	.ROD .VALILLA COMPL INCLINACION		1				
4	62Y–43822–00	.SEAL, TRIM DUST .SELLO DE POLVO		1				
5	6CJ–43821–10	.SCREW, TRIM CYLINDER END .TORNILLO CILINDURO EXTREMO		1				
6	93210–49001	.O-RING .ANILLO O		1				
7	6CJ–43863–00	.O-RING .ANILLO EN O 3		1				
8	6CJ–4380R–10	.CYLINDER END SUB ASSY .CILINDRO EXTREMO SUB-COMPLET		1				
9	6CJ–43863–00	..O-RING ..ANILLO EN O 3		1				
10	93210–44006	..O-RING ..ANILLO O		1				
11	6C5–43861–00	.O-RING .ANILLO EN O 1		1				
12	6C5–43871–00	.RING, BACK UP .ANILLO		1				
13	6CJ–22471–10	CYLINDER, SHOCK ABSORBER CILINDRO DE AMORTIGUADOR		1				
14	93503–16003	BALL ESFERA		6				
15	6C5–43861–00	O-RING ANILLO EN O 1		1				
16	6C5–43875–00	RING, SNAP ANILLO		1				
17	6CJ–4381B–10	FREE PISTON SUB ASSY SUB-PISTON COMPL		1				
18	6C5–43899–00	PLATE STOPPER PLACA		1				
19	62X–4384H–00	SPRING RESORTE		2				
20	6C5–22435–00	PLATE, VALVE 2 PLACA DE VALVULA 2		1				
21	99009–32500	CIRCLIP PRESILLA REDONDA		1				
22	6C5–4380K–11	CYLINDER, TILT SUB ASSY CILINDRO, INCLINACION		1				
23	6C5–43817–10	FILTER 2 FIELTRO 2		2				
24	69J–4389J–00	O-RING ANILLO O		2				
25	6C5–43816–00	FILTER 1 FIELTRO 1		1				
26	6C5–4380G–00	PLATE PLACA		1				
27	91318–05045	BOLT TORNILLO		4				

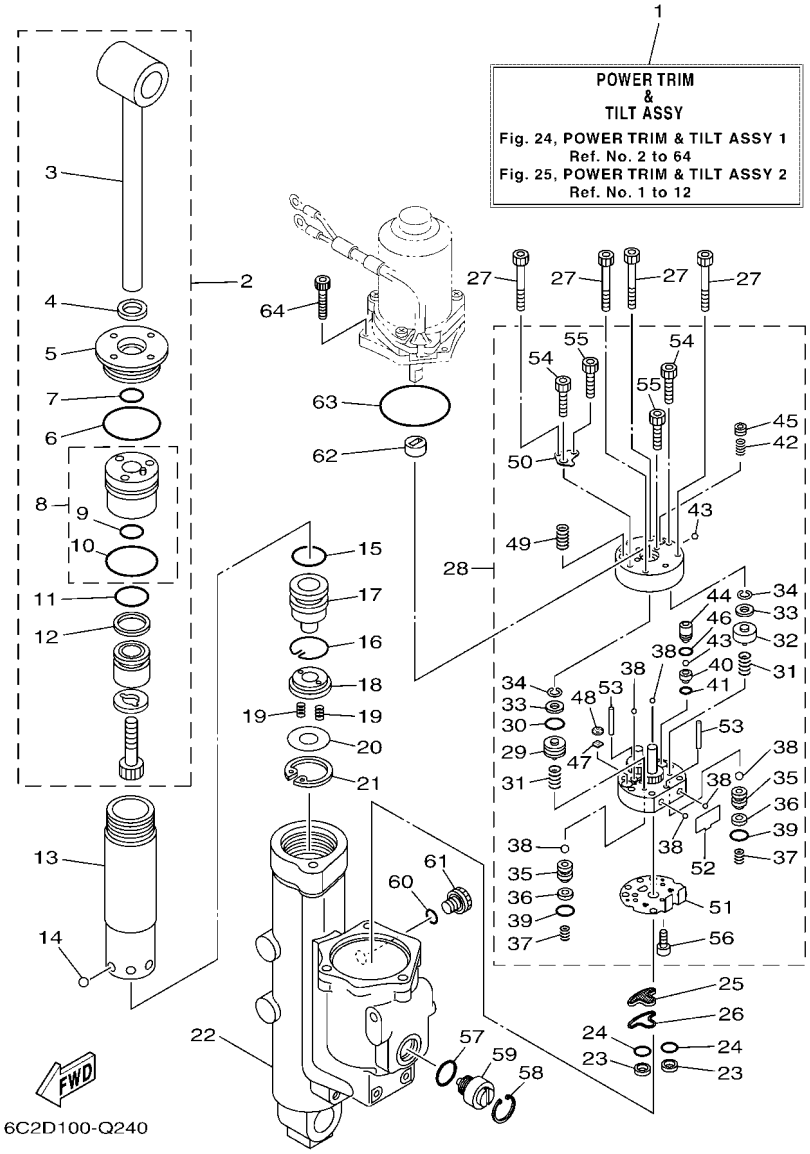

FIG. 24 POWER TRIM & TILT ASSY 1 — COMPONER Y PODER VARILLA 1

REF. NO.	PART NO. CODIGO Nº	DESCRIPTION DESCRIPCION	EHD	ET				REMARKS OBSERVACIONES
28	6C5–43830–10	GEAR PUMP ASSY ENGRANAJE BOMBA COMPL.		1				
29	6D8–43841–00	.PISTON, SHUTTLE .PISTON		1				
30	6H1–43883–00	.O-RING .ANILLO EN O 10		1				
31	69J–43894–00	.SPRING, SHUTTLE RETURN .RESORTE		2				
32	6D8–4384M–00	.PISTON, SHUTTLE 2 .PISTON 2		1				
33	69A–4384F–00	.SEAL, MAIN VALVE .ASIENTO		2				
34	99002–03600	.CIRCLIP .PRESILLA REDONDA		2				
35	6EK–4382E–00	.ADAPTOR 2 .ADAPTADOR 2		2				
36	6C6–4387G–00	.WASHER .ARANDELA		2				
37	6C6–43853–00	.SPRING, MAIN VALVE .RESORTE		2				
38	93505–32038	.BALL .BOLA		6				
39	69J–4389J–00	.O-RING .ANILLO O		2				
40	6D8–43851–00	.SEAT, RELIEF VALVE .ASIENTO VALVULA DE DESCARGA		1				
41	93210–064A5	.O-RING .ANILLO O		1				
42	6C5–43855–10	.SPRING, UP RELIEF .RESORTE SEGURIDAD SUPERIOR		1				
43	93501–08001	.BALL .BOLA		2				
44	6D8–43844–00	.PIN, VALVE SUPPORT .PASADOR VALVULA SOPORTE		1				
45	6D8–43843–00	.SCREW, VALVE LOCK .TORNILLO		1				
46	93210–04N51	.O-RING .ANILLO O		1				
47	6H1–4384G–11	.SEAL, RELIEF VALVE .ASIENTO		1				
48	6H1–43844–10	.PIN, VALVE SUPPORT .PASADOR VALVULA SOPORTE		1				
49	6C5–43856–10	.SPRING, DOWN RELIEF .RESORTE SEGURIDAD		1				
50	6D8–4382L–00	.CAP, RELIEF VALVE .TAPA		1				
51	6C5–43895–00	.SEAT, RELIEF VALVE .ASIENTO		1				
52	6C5–43854–00	.SPRING, MANUAL RELEASE .RESORTE DESCOPLO MANUAL		1				
53	93604–26256	.PIN, DOWEL .PASADOR DE CLAVIJA		2				
54	91318–05030	.BOLT .TORNILLO		2				

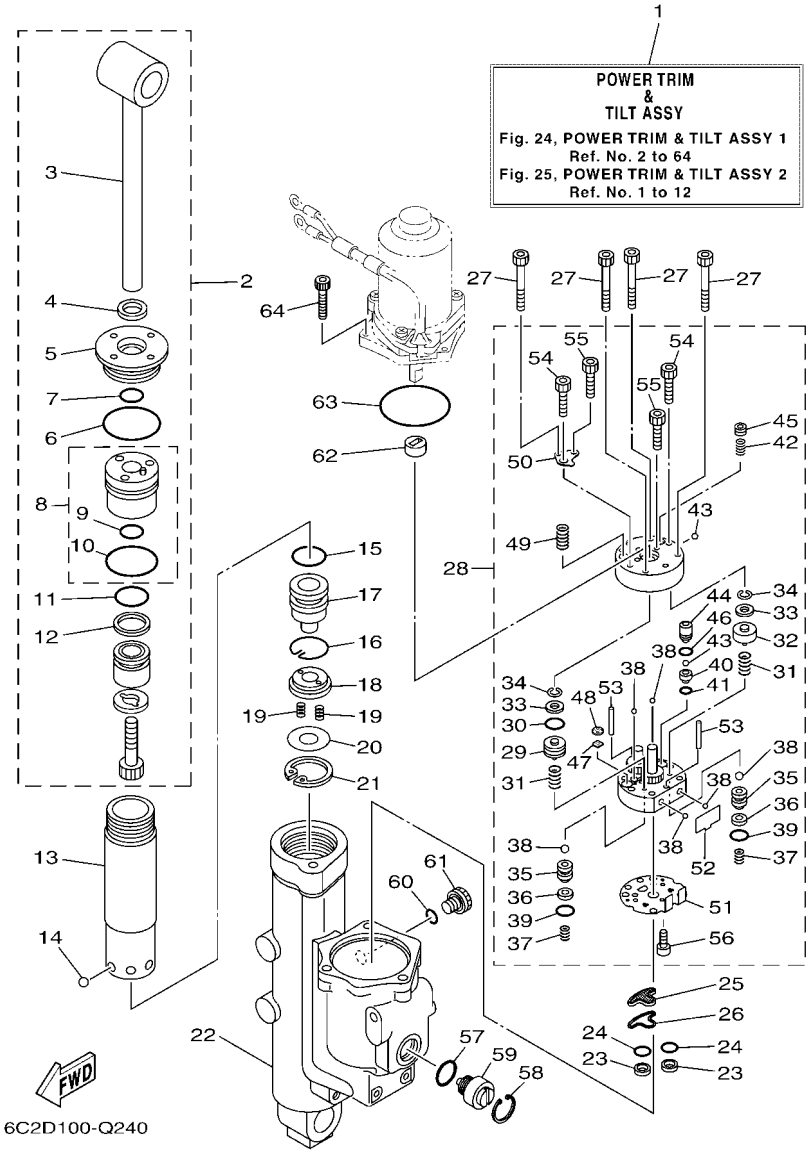

FIG. 24 POWER TRIM & TILT ASSY 1 — COMPONER Y PODER VARILLA 1

REF. NO.	PART NO. CODIGO Nº	DESCRIPTION DESCRIPCION	EHD	ET				REMARKS OBSERVACIONES
55	91318–03025	.BOLT .TORNILLO		2				
56	91318–03005	.BOLT .TORNILLO		1				
57	6D8–43863–00	O-RING ANILLO EN O 3		1				
58	6H1–43875–00	RING, SNAP ANILLO		1				
59	6CJ–43845–10	SCREW, MANUAL RELEASE TORNILLO DESCOPLO MANUAL		1				
60	93210–09165	O-RING ANILLO O		1				
61	6CJ–43829–10	PLUG, RESERVOIR TAPON DEPOSITO		1				
62	6C5–43831–00	CONNECTOR, SHAFT CONEXION EJE		1				
63	93210–64488	O-RING ANILLO O		1				
64	91380–05020	BOLT PERNO		3				

FIG. 25 POWER TRIM & TILT ASSY 2 — COMPONER Y PODER VARILLA 2

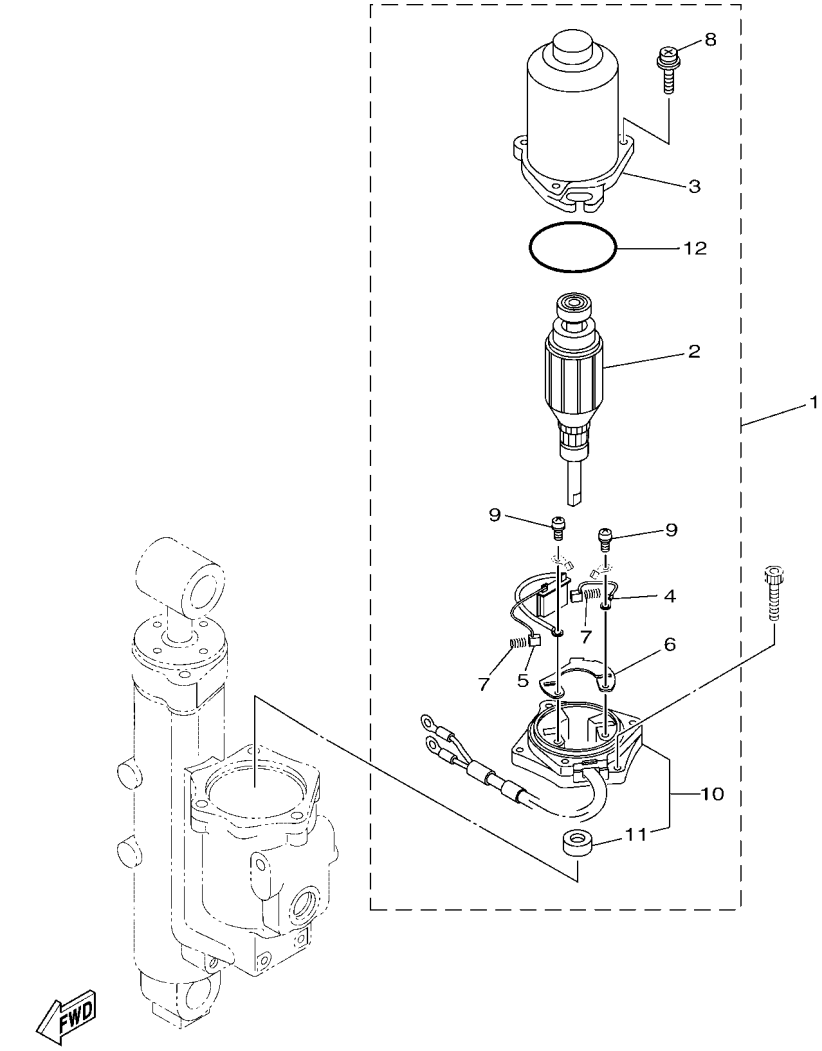

REF. NO.	PART NO. CODIGO Nº	DESCRIPTION DESCRIPCION	EHD	ET				REMARKS OBSERVACIONES
1	6CJ–43880–12	MOTOR ASSY MOTOR COMPL.		1				
2	6CJ–43805–10	.ARMATURE ASSY .INDUCIDO COMPL.		1				
3	6CJ–43804–11	.STATOR ASSY .ESTATOR COMPL		1				
4	6EK–43892–00	.BRUSH 2 .ESCOBILLA 2		1				
5	6CJ–82181–10	.CIRCUIT BREAKER COMP. .RUPTOR DE CIRCUITO COMPL		1				
6	6EK–4380F–00	.PLATE, BRUSH HOLDER .PLACA		1				
7	62X–4386K–00	.SPRING, BRUSH .RESORTE, ESCOBILLA		2				
8	6CJ–43879–10	.SCREW, WITH WASHER .TORNILLO CON RONDANA		3				
9	97602–04316	.SCREW, PAN HEAD WITH WASHER .TORNILLO CON RONDONA		2				
10	6CJ–43881–10	.FRAME, END .CUADRO EXTERMO		1				
11	6EK–43882–00	..OIL SEAL ..SELLO ACEITE		1				
12	6CJ–43862–10	.O-RING .ANILLO EN O 2		1				

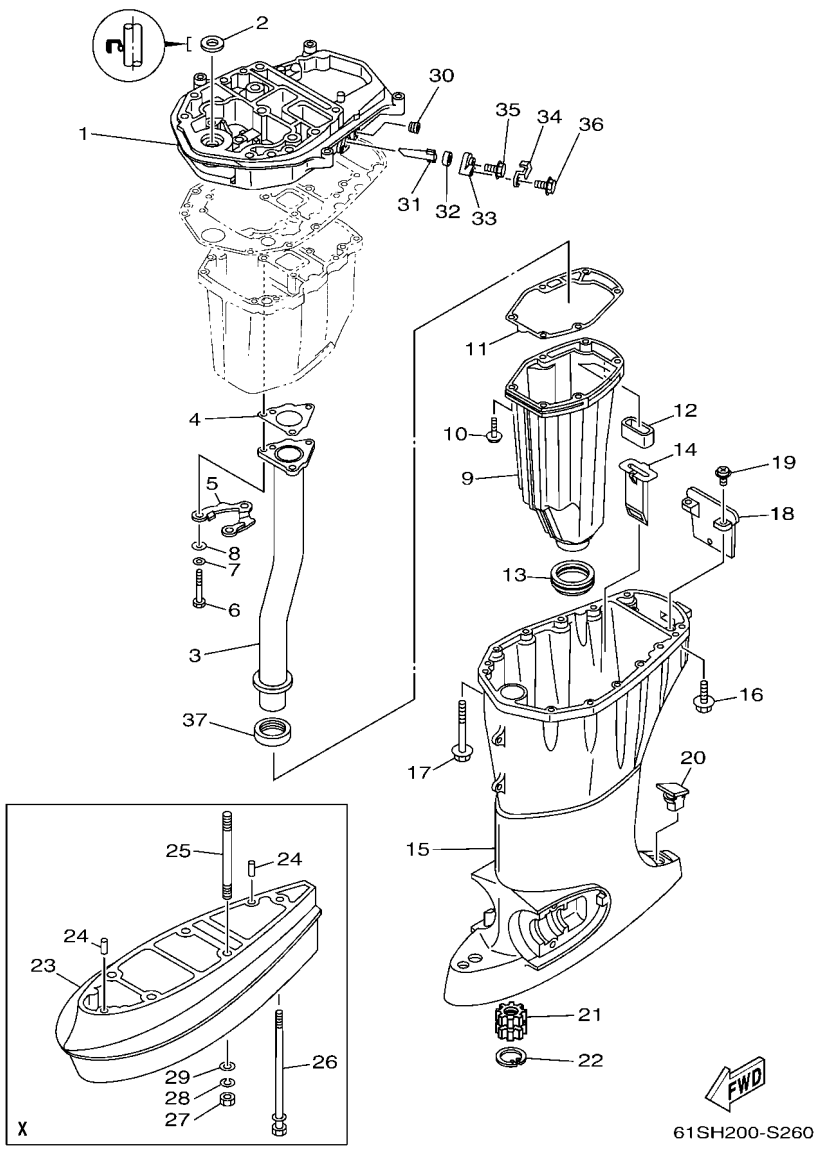

FIG. 26 UPPER CASING — FUNDA SUPERIOR

REF. NO.	PART NO. CODIGO Nº	DESCRIPTION DESCRIPCION	EHD	ET				REMARKS OBSERVACIONES
1	64J–41137–03–CA	GUIDE, EXHAUST GUIA DE ESCAPE	1	1				
2	93103–18011	OIL SEAL SELLO ACEITE	1	1				
3	64J–41131–10	MANIFOLD, EXT. 1 TUBO MULTIPLE DE ESCAPE	1	1				
4	64J–41133–10	GASKET, EXHAUST MANIFOLD 1 EMPAQUE ESCAPE MULTIPLE	1	1				
5	64J–41116–00	PROTECTOR PROTECTOR	1	1				
6	97075–06050	BOLT PERNO	3	3				
7	92995–06600	WASHER ARANDELA	3	3				
8	90201–06015	WASHER, PLATE ARANDELA PLANA	3	3				
9	64J–14711–00–CA	MUFFLER 1 SILENCIADOR 1	1	1				
10	97575–06525	BOLT, WITH WASHER PERNO CON ARANDELA	6	6				
11	6BG–41134–00	GASKET, EXHAUST MANIFOLD EMPAQUE	1	1				
12	62Y–45127–00	SEAL SELLO DE GOMA	1	1				
13	663–45123–00	GASKET, MUFFLER EMPAQUE SILENCIADOR	1	1				
14	64J–77123–00	GUIDE 1 GUIA 1	1	1				
15	62Y–45111–21–8D	CASING, UPPER CAJA SUPERIOR	1	1				
16	90119–08102	BOLT, WITH WASHER TORNILLO CON ARANDELA	4	4				
17	90119–08132	BOLT, WITH WASHER TORNILLO CON ARANDELA	8	8				
18	62Y–45151–00	COVER, UPPER CASING CUBIERTA FUNDA SUPERIOR	1	1				
19	97980–05216	SCREW, WITH WASHER TORNILLO, CON ARANDELA	2	2				
20	6C5–45155–00	CAP TAPA	1	1				
21	69W–45318–00	BUSHING, DRIVE SHAFT BUJE, EJE DE MANDO	1	1				
22	93420–36M01	CIRCLIP SEGURO	1	1				
23	63D–45211–02–8D	EXTENSION EXTENSION	1	1				X(25.5") X(25.5")
24	93606–12019	PIN, DOWEL PASADOR DE CLAVIJA	2	2				X(25.5") X(25.5")
25	90116–10M53	BOLT, STUD ESPARRAGO	4	4				X(25.5") X(25.5")
26	90119–08M00	BOLT, WITH WASHER TORNILLO CON ARANDELA	1	1				X(25.5") X(25.5")
27	95380–10600	NUT TUERCA	4	4				X(25.5") X(25.5")

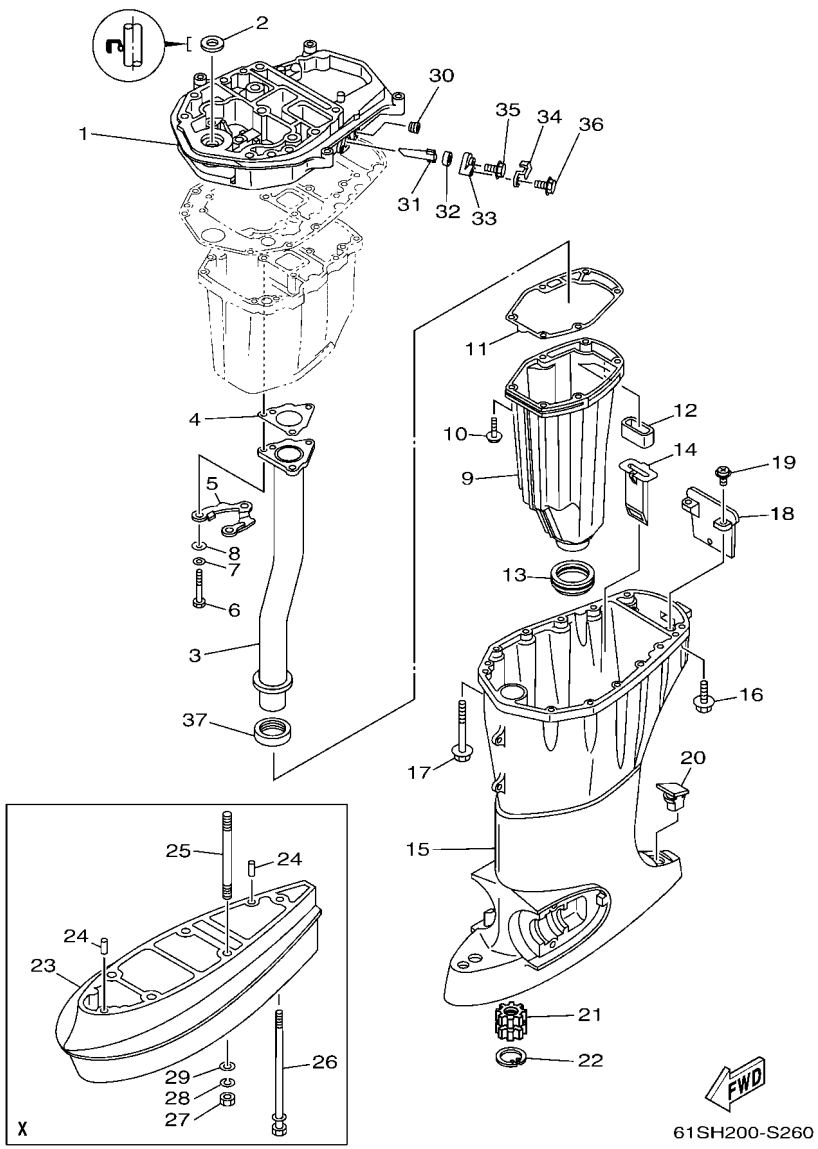

FIG. 26 UPPER CASING — FUNDA SUPERIOR

REF. NO.	PART NO. CODIGO Nº	DESCRIPTION DESCRIPCION	EHD	ET				REMARKS OBSERVACIONES
28	92990–10100	WASHER, SPRING ARANDELA PLANA	4	4				X(25.5") X(25.5")
29	92995–10600	WASHER ARANDELA	4	4				X(25.5") X(25.5")
30	68T–11112–00	PLUG, BLIND 1 TAPON	1	1				
31	62Y–11325–00	ANODE ANODO	1	1				
32	66M–11328–00	GROMMET, ANODE TAPON	1	1				
33	66M–11327–00–94	COVER, ANODE CUBIERTA DE ANODO	1	1				
34	66M–12535–00	PLATE EMPAQUETADURA	1	1				
35	97595–05512	BOLT, WITH WASHER PERNO CON ARANDELA	1	1				
36	97513–06520	BOLT, WITH WASHER PERNO CON ARANDELA	1	1				
37	64J–46132–10	GASKET 1 EMPAQUE 1	1	1				

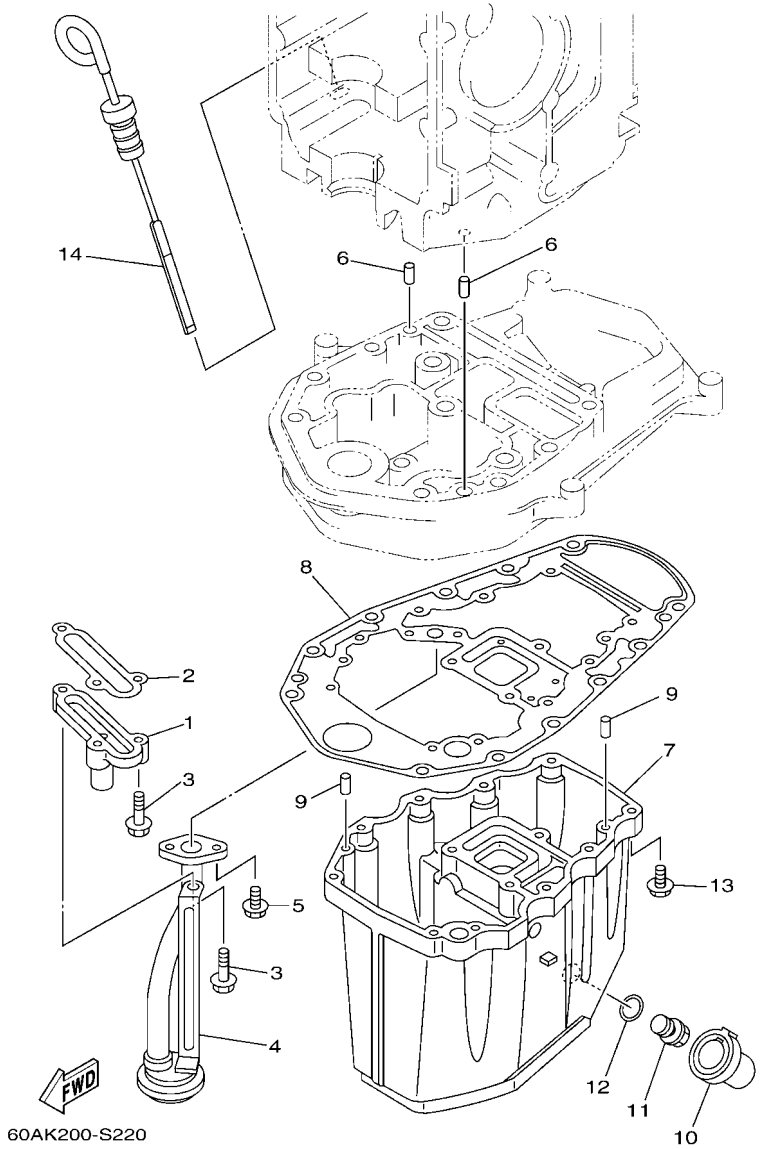

FIG. 27 OIL PAN

OIL PAN

REF. NO.	PART NO. CODIGO Nº	DESCRIPTION DESCRIPCION	EHD	ET				REMARKS OBSERVACIONES
1	62Y–11575–00	RELIEF VALVE ASSY CONEXION, VARILLA EJE	1	1				
2	62Y–13475–00	GASKET EMPAQUE	1	1				
3	97513–06525	BOLT, WITH WASHER PERNO CON ARANDELA	3	3				
4	62Y–13411–00	STRAINER, OIL FILTRO DE ACEITE	1	1				
5	97513–06516	BOLT, WITH WASHER PERNO CON ARANDELA	2	2				
6	93608–12M05	PIN, DOWEL PASADOR DE CLAVIJA	2	2				
7	64J–15311–02–9S	OIL PAN BANDEJA DE ACEITE	1	1				
8	61S–15312–00	GASKET, OIL PAN EMPAQ BANDEJA DE ACEITE	1	1				
9	93606–12019	PIN, DOWEL PASADOR DE CLAVIJA	4	4				
10	62Y–15316–00	DAMPER 1 AMORTIGUADOR 1	1	1				
11	90340–14M06	PLUG, STRAIGHT SCREW TORNILLO, DE DRENAJE	1	1				
12	90430–14M09	GASKET JUNTA	1	1				
13	97575–06525	BOLT, WITH WASHER PERNO CON ARANDELA	10	10				
14	62Y–15362–00	PLUG, OIL LEVEL TAPON DEL NIVEL DE ACEITE	1	1				

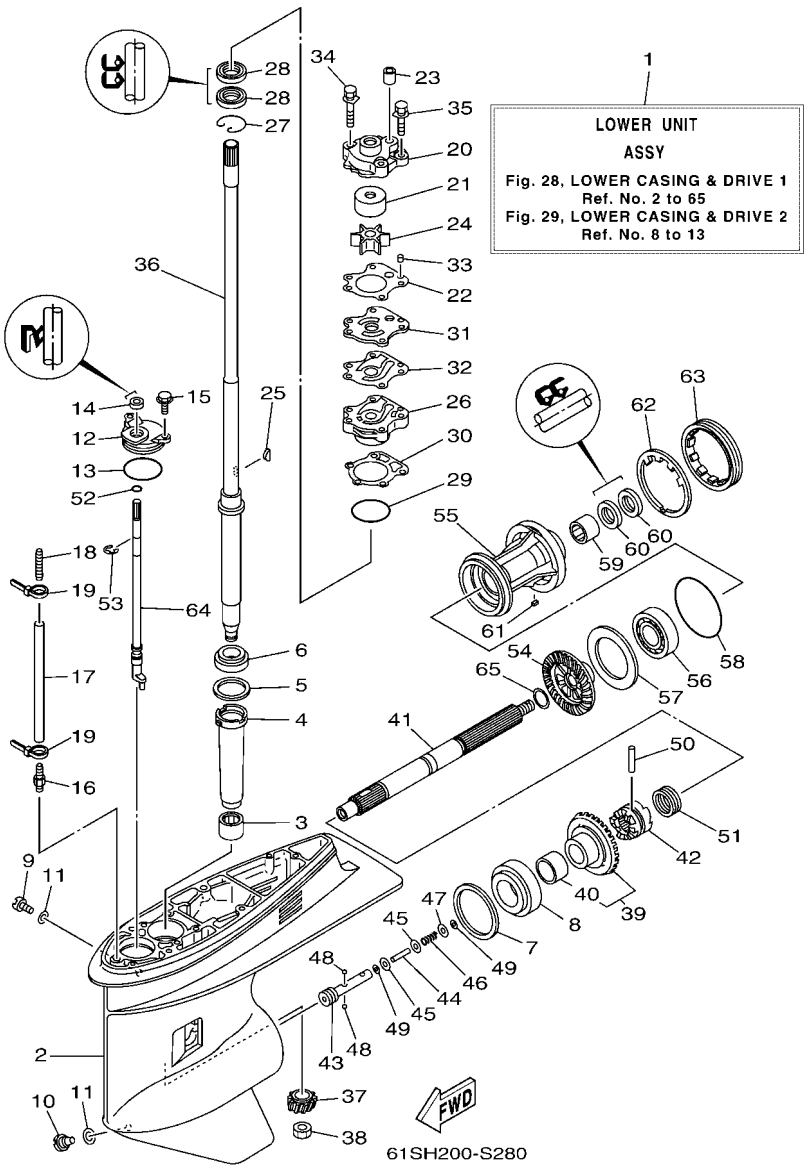

FIG. 28 LOWER CASING & DRIVE 1 — IMPULSOR E INFERIOR 1

REF. NO.	PART NO. CODIGO Nº	DESCRIPTION DESCRIPCION	EHD	ET				REMARKS OBSERVACIONES
1	64J–45300–32–8D	LOWER UNIT ASSY CONJUNTO UNIDAD INFERIOR	1	1				L(21.1") L(21.1")
	64J–45300–42–8D	LOWER UNIT ASSY CONJUNTO UNIDAD INFERIOR	1	1				X(25.5") X(25.5")
2	67F–45301–00–8D	CASING, LOWER FUNDA INFERIOR COMPLETA	1	1				
3	93315–52563	BEARING COJINETE DE RODILLOS	1	1				
4	688–45536–01	SLEEVE, DRIVE SHAFT CAMISA EJE DE MANDO	1	1				
5	688–45587–01	SHIM (T:0.10MM) LAINA (T:0.10MM)	1	1				UR UR
	688–45587–10	SHIM (T:0.12MM) LAINA (T:0.12MM)	1	1				UR UR
	688–45587–20	SHIM (T:0.15MM) LAINA (T:0.15MM)	1	1				UR UR
	688–45587–30	SHIM (T:0.18MM) LAINA (T:0.18MM)	1	1				UR UR
	688–45587–40	SHIM (T:0.30MM) LAINA (T:0.30MM)	1	1				UR UR
	688–45587–50	SHIM (T:0.40MM) LAINA (T:0.40MM)	1	1				UR UR
	688–45587–60	SHIM (T:0.50MM) LAINA (T:0.50MM)	1	1				UR UR
6	93332–000U3	BEARING COJINETE	1	1				
7	688–45567–01	SHIM (T:0.10MM) LAINA (T:0.10MM)	1	1				UR UR
	688–45567–10	SHIM (T:0.12MM) LAINA (T:0.12MM)	1	1				UR UR
	688–45567–20	SHIM (T:0.15MM) LAINA (T:0.15MM)	1	1				UR UR
	688–45567–30	SHIM (T:0.18MM) LAINA (T:0.18MM)	1	1				UR UR
	688–45567–40	SHIM (T:0.30MM) LAINA (T:0.30MM)	1	1				UR UR
	688–45567–50	SHIM (T:0.40MM) LAINA (T:0.40MM)	1	1				UR UR
	688–45567–60	SHIM (T:0.50MM) LAINA (T:0.50MM)	1	1				UR UR
8	93332–00095	BEARING COJINETE	1	1				
9	90340–08002	PLUG, STRAIGHT SCREW TORNILLO, DE DRENAJE	1	1				
10	688–45341–10	PLUG, DRAIN TAPON, DREN	1	1				
11	90430–08003	GASKET JUNTA	2	2				
12	688–45321–00	PLATE PLACA	1	1				
13	93210–49046	O-RING ANILLO O	1	1				
14	93106–09014	OIL SEAL SELLO ACEITE	1	1				

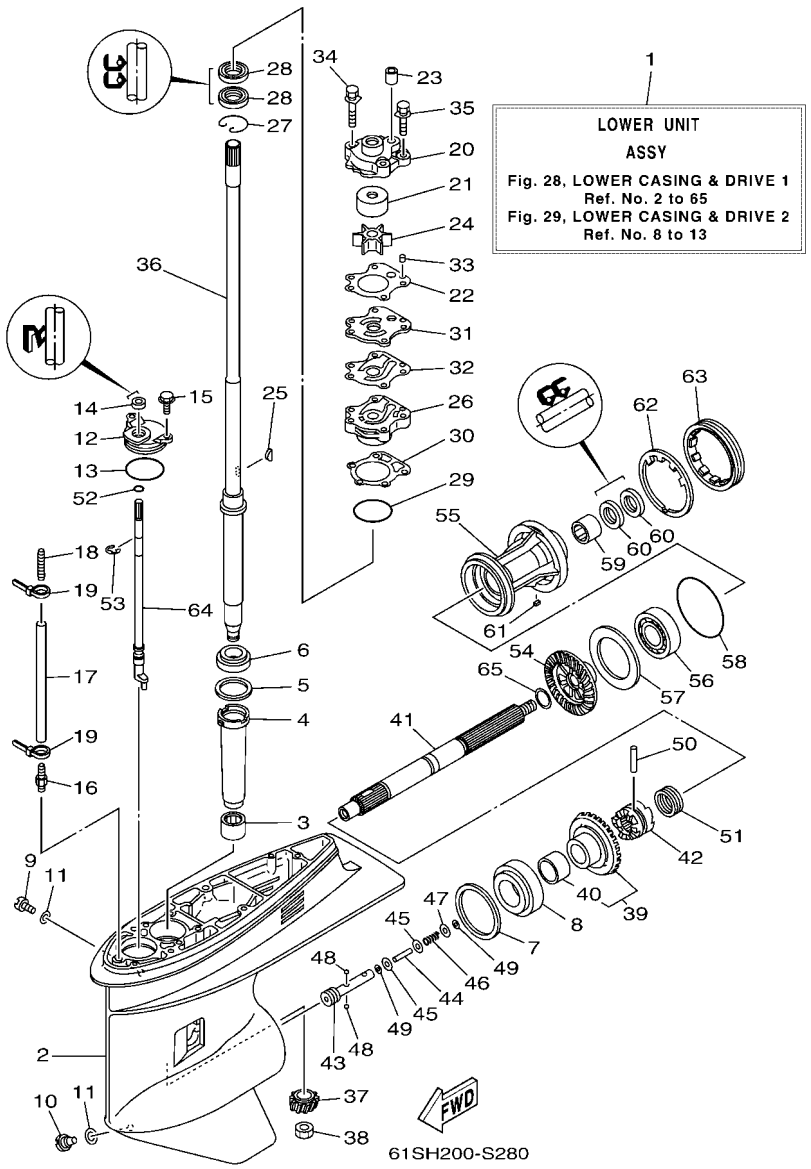

FIG. 28 LOWER CASING & DRIVE 1 — IMPULSOR E INFERIOR 1

REF. NO.	PART NO. CODIGO Nº	DESCRIPTION DESCRIPCION	EHD	ET				REMARKS OBSERVACIONES
15	97595–06516	BOLT, WITH WASHER PERNO CON ARANDELA	2	2				
16	6E5–45378–00	NIPPLE, HOSE NIPLE MANGUERA	1	1				
17	90445–07M31	HOSE (L200) TUBO (L200)	1	1				L(21.1") L(21.1")
	90445–07M38	HOSE (L300) TUBO (L300)	1	1				X(25.5") X(25.5")
18	6E5–83558–10	END, NIPPLE EXTREMO DE NIPLE	1	1				
19	90465–11M10	CLAMP BRIDA	2	2				
20	6H3–44311–00	HOUSING, WATER PUMP CAJA BOMBA DE AGUA	1	1				
21	663–44322–40	INSERT, CARTRIDGE CARTUCHO	1	1				FOR CHROMATE FOR CHROMATE
22	6H3–44315–A0	GASKET, WATER PUMP EMPAQUE	1	1				
23	663–44366–00	DAMPER, WATER SEAL 2 GOMA DEL SELLO DE AGUA 2	1	1				
24	6H3–44352–00	IMPELLER IMPULSOR	1	1				
25	90280–03M03	KEY, WOODRUFF CUNA WOODRUFF	1	1				
26	6H3–44341–01–CA	HOUSING, WATER PUMP CAJA BOMBA DE AGUA	1	1				
27	93450–40165	CIRCLIP SEGURO	1	1				
28	93101–23070	OIL SEAL SELLO ACEITE	2	2				
29	93210–46044	O-RING ANILLO O	1	1				
30	688–44316–A0	GASKET, WATER PUMP EMPAQUE	1	1				
31	6H3–44323–40	OUTER PLATE, CARTRIDGE PLACA EXTERIOR DEL CARTUCHO	1	1				FOR CHROMATE FOR CHROMATE
32	6H3–44324–A0	GASKET, CARTRIDGE EMPAQUE	1	1				
33	93604–10M03	PIN, DOWEL PASADOR DE CLAVIJA	2	2				
34	90119–08M33	BOLT, WITH WASHER TORNILLO CON ARANDELA	2	2				
35	90119–08M14	BOLT, WITH WASHER TORNILLO CON ARANDELA	2	2				
36	64J–45501–30	DRIVE SHAFT COMP. EJE DE MANDO COMPL.	1	1				L(21.1") L(21.1")
	64J–45501–40	DRIVE SHAFT COMP. EJE DE MANDO COMPL.	1	1				X(25.5") X(25.5")
37	64J–45551–00	PINION (13T) PINON (13T)	1	1				
38	90170–16M01	NUT TUERCA	1	1				
39	64J–45560–00	GEAR 1 (30T) ENGRANAJE 1 (30T)	1	1				

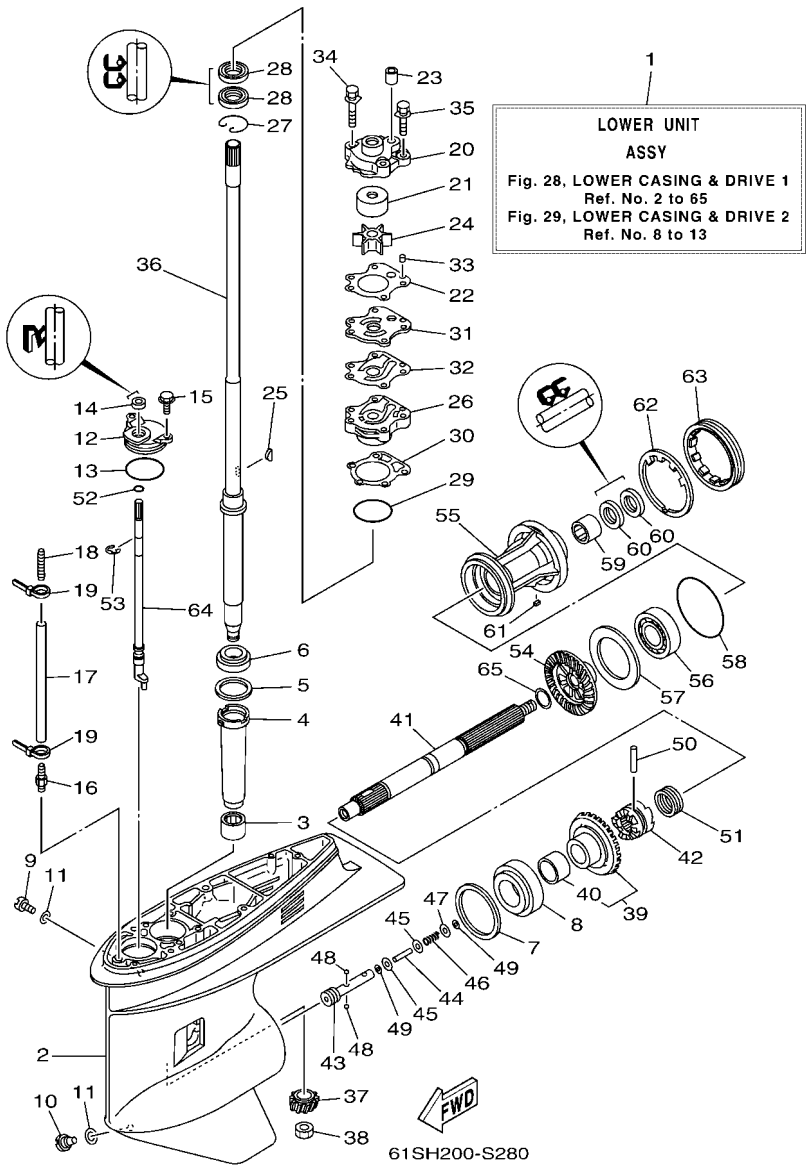

FIG. 28 LOWER CASING & DRIVE 1 — IMPULSOR E INFERIOR 1

REF. NO.	PART NO. CODIGO Nº	DESCRIPTION DESCRIPCION	EHD	ET				REMARKS OBSERVACIONES
40	93317–322V0	.BEARING .COJINETE	1	1				
41	67F–45611–01	SHAFT, PROPELLER EJE PROPUSOR	1	1				
42	6D8–45631–00	CLUTCH, DOG EMBRAGUE DE GARRA	1	1				
43	67F–45634–00	SLIDE, SHIFT DESLIZADOR, CAMBIO	1	1				
44	6H1–45668–00	SHAFT, FREE 1 EJE 1	1	1				
45	6H1–45635–00	PLUNGER, SHIFT EMBOLO DE CAMBIO	2	2				
46	90501–12M48	SPRING, COMPRESSION RESORTE DE COMPRESION	1	1				
47	90201–03313	WASHER, PLATE ARANDELA PLANA	1	1				
48	93503–16003	BALL ESFERA	2	2				
49	90183–02M03	NUT, SPRING TUERCA DE RESORTE	2	2				
50	90250–07M02	PIN, STRAIGHT PASADOR CILINDRICO	1	1				
51	688–45633–00	RING, CROSS PIN ANILLO DE PASADOR	1	1				
52	93210–07003	O-RING ANILLO O	1	1				
53	99001–08600	CIRCLIP PRESILLA REDONDA	1	1				
54	67F–45571–00	GEAR 2 (30T) ENGRANAJE 2 (30T)	1	1				
55	67F–45331–00–CA	HOUSING, BEARING CAJA DE COJINETE	1	1				
56	93306–207U0	BEARING COJINETE	1	1				
57	67F–45576–00	WASHER, THRUST 2 ARANDELA DE EMPUJE AXIAL 2	1	1				
58	93210–86M39	O-RING ANILLO O	1	1				
59	93317–325U0	BEARING COJINETE	1	1				
60	93101–25M03	OIL SEAL SELLO ACEITE	2	2				
61	90282–04010	KEY, STRAIGHT CHAVETA, RECTA	1	1				
62	688–45383–02	WASHER, CLAW ARANDELA DE UNA	1	1				
63	688–45384–02	NUT TUERCA	1	1				
64	64J–44150–01	SHIFT CAM ASSY CONJUNTO EJE LEVA COMPL.	1	1				
65	90201–25M05	WASHER, PLATE ARANDELA PLANA	1	1				

FIG. 29 LOWER CASING & DRIVE 2 — IMPULSOR E INFERIOR 2

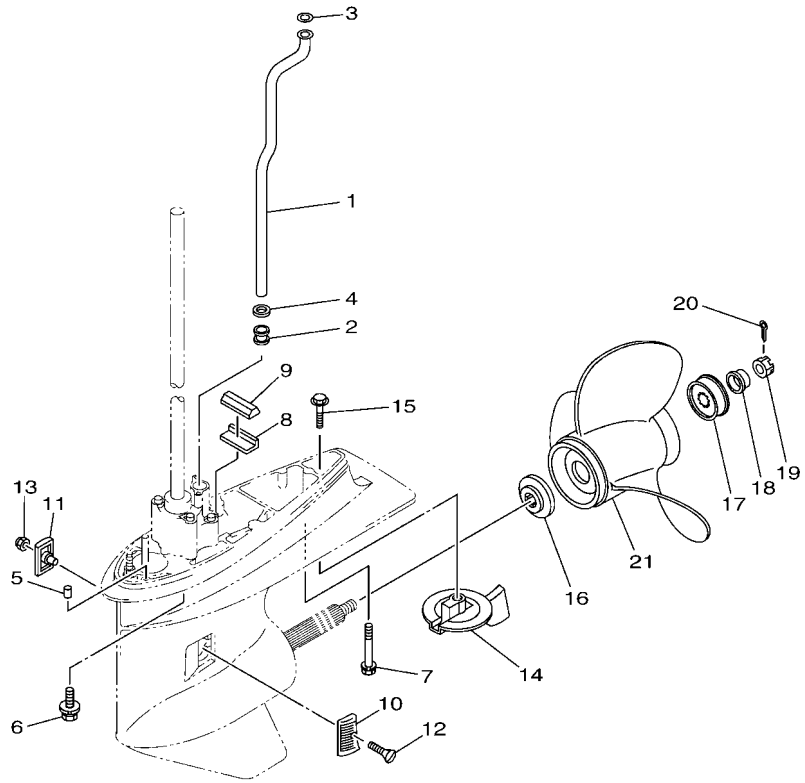

61SG200-R290

REF. NO.	PART NO. CODIGO Nº	DESCRIPTION DESCRIPCION	EHD	ET				REMARKS OBSERVACIONES
1	62Y–44361–00	TUBE, WATER 1 TUBO DE AGUA 1	1	1				L(21.1") L(21.1")
	62Y–44361–20	TUBE, WATER 1 TUBO DE AGUA 1	1	1				X(25.5") X(25.5")
2	663–44367–00	DAMPER, WATER SEAL 3 GOMA DEL SELLO DE AGUA 3	1	1				
3	90202–12060	WASHER, PLATE ARANDELA DE PLANA	1	1				
4	90430–12072	GASKET JUNTA	1	1				
5	93606–12019	PIN, DOWEL PASADOR DE CLAVIJA	2	2				
6	90119–10068	BOLT, WITH WASHER TORNILLO CON ARANDELA	4	4				L(21.1") L(21.1")
7	90119–08M84	BOLT, WITH WASHER TORNILLO CON ARANDELA	1	1				L(21.1") L(21.1")
8	663–45376–00	GUIDE, SEAL DAMPER GUIA DE SELLO GOMA	1	1				
9	688–45375–00	DAMPER, SEAL GOMA DE SELLO	1	1				
10	6H1–45214–00	COVER, WATER INLET 1 CUBIERTA ENTRADA AGUA 1	1	1				
11	6H1–45215–00	COVER, WATER INLET 2 CUBIERTA ENTRADA AGUA 2	1	1				
12	90151–05M00	SCREW, COUNTERSUNK TORNILLO EMBUTIDO	1	1				
13	90185–05002	NUT, NYLON TUERCA AUTOBLOCANTE	1	1				
14	67F–45371–00	TAB-TRIM QUILLA ESTABILIZADOR	1	1				
15	90105–10M67	BOLT, FLANGE TORNILLO	1	1				
16	688–45987–01	SPACER 1 ESPACIADOR 1	1	1				
17	67F–45997–00	SPACER 2 ESPACIADOR 2	1	1				
18	90389–25M00	BUSH BUJE	1	1				
19	90171–16011	NUT, CASTLE TUERCA ENTALLADA	1	1				
20	91490–30025	PIN. COTTER CHAVETA	1	1				
21	6E5–45954–00	PROPELLER (3X14"X11"-K) PROPELA (3X14"X11"-K)	1	1				UR UR
	6E5–45949–00	PROPELLER (3X13-5/8"X13"-K) PROPELA (3X13-5/8"X13"-K)	1	1				UR UR
	688–45932–60	PROPELLER (3X13-1/2"X14"-K) PROPELA (3X13-1/2"X14"-K)	1					UR UR
	6E5–45947–00	PROPELLER (3X13-1/2"X15"-K) PROPELA (3X13-1/2"X15"-K)	1	1				UR UR
	6E5–45945–01	PROPELLER (3X13-1/4"X17"-K) PROPELA (3X13-1/4"X17"-K)	1	1				UR UR
	6E5–45941–00	PROPELLER (3X13"X19"-K) PROPELA (3X13"X19"-K)	1	1				UR UR

FIG. 29 LOWER CASING & DRIVE 2 — IMPULSOR E INFERIOR 2

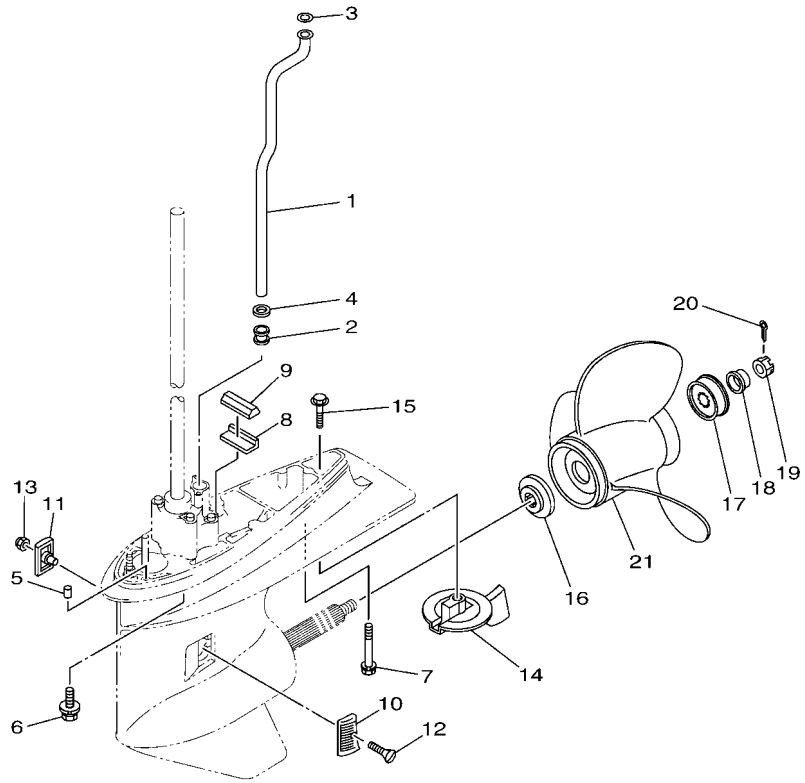

61SG200-R290

REF. NO.	PART NO. CODIGO Nº	DESCRIPTION DESCRIPCION	EHD	ET				REMARKS OBSERVACIONES
21	6E5–45943–00	PROPELLER (3X12-5/8"X21"-K) PROPELA (3X12-5/8"X21"-K)	1	1				UR UR
	6E5–45952–00	PROPELLER (3X13"X23"-K) PROPELA (3X13"X23"-K)	1	1				UR UR
	6E5–45956–00	PROPELLER (3X13"X25"-K) PROPELA (3X13"X25"-K)	1	1				UR UR

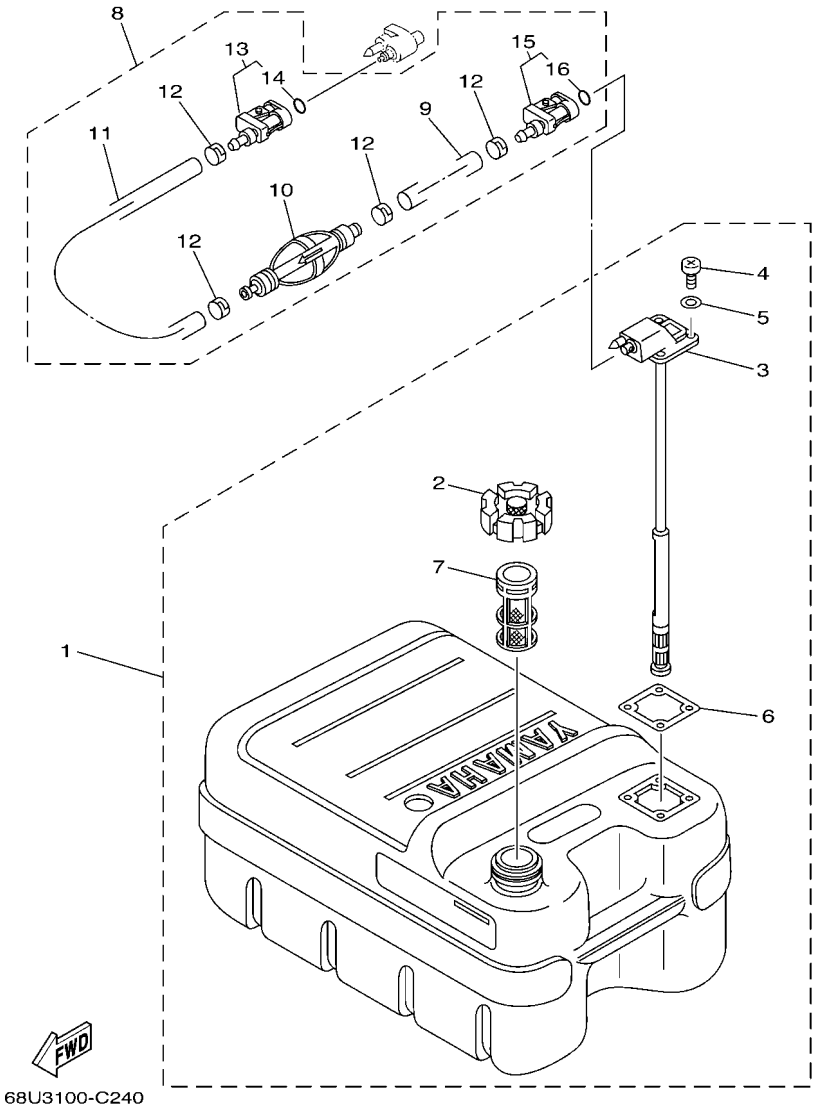

FIG. 30 FUEL TANK — DEPOSITO DE COMBUSTIBLE

REF. NO.	PART NO. CODIGO Nº	DESCRIPTION DESCRIPCION	EHD	ET				REMARKS OBSERVACIONES
1	6YJ–24201–20	FUEL TANK ASSY (24L) TANQUE DEL COMBUSTIBLE (24L)	1	1				AP AP
2	6YJ–24610–01	.CAP ASSY .TAPA COMPLETA	1	1				
3	6YJ–24260–10	.FUEL METER ASSY .MEDIDOR DE COMBUSTIBLE COMPL.	1	1				
4	90157–05M19	.SCREW, PAN HEAD .TORNILLO CABEZA CONICA PLANA	4	4				
5	6Y1–24329–00	.SEAL .SELLO	4	4				
6	6Y1–24268–00	.GASKET, FUEL METER .EMPAQ MEDIDOR DE COMBUSTIBLE	1	1				
7	6YJ–24167–00	.STRAINER .COLADOR	1	1				
8	61J–24306–04	FUEL PIPE COMP. 1 TUBO COMBUST. COMPL 1	1	1				AP AP
9	90445–11M06	.HOSE (L2050) .MANGUERA (L2050)	1	1				
10	61J–24360–00	.PRIMER PUMP ASSY .SOPORTE BOMBA	1	1				
11	90445–11M05	.HOSE (L850) .MANGUERA (L850)	1	1				
12	650–24351–51	.BAND 1 .ABRAZADERA 1	4	4				
13	6G1–24305–05	.FUEL PIPE JOINT COMP. 2 .CONECTOR MANGUERA COMBUST. 2	1	1				
14	93210–08287	..O-RING ..ANILLO O	1	1				
15	6Y1–24305–06	.FUEL PIPE JOINT COMP. 2 .CONECTOR MANGUERA COMBUST. 2	1	1				
16	93210–08287	..O-RING ..ANILLO O	1	1				

FIG. 31 STEERING GUIDE — DIRECCIONGUIAR

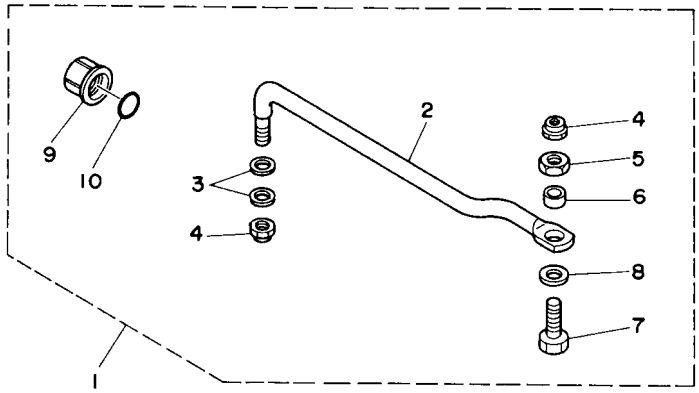

62Y0010-5200

REF. NO.	PART NO. CODIGO Nº	DESCRIPTION DESCRIPCION	EHD	ET				REMARKS OBSERVACIONES
1	63D–61350–00	STEERING GUIDE ATTACHMENT KIT ESTUCHE ADITAMENTO GUIA DE TIM		1				AP AP
2	63D–61351–00	.ROD, STEERING LINK .VARILLA ESLABON DIRECCION		1				
3	90201–10M20	.WASHER, PLATE .ARANDELA PLANA		2				
4	90185–09M01	.NUT, SELF-LOCKING .TUERCA AUTOBLOCANTE		2				
5	90170–09M03	.NUT .TUERCA		1				
6	90387–10M42	.COLLAR .ESPACIADOR		1				
7	90101–09M01	.BOLT .TORNILLO		1				
8	90201–10M63	.WASHER, PLATE .ARANDELA PLANA		1				
9	6E5–43145–01	.CAP, CLAMP BRACKET .TAPA		1				
10	93210–16275	.O-RING .ANILLO O		1				

FIG. 32 REMOTE CONTROL BOX — CONTROL REMOTO COMPLETO

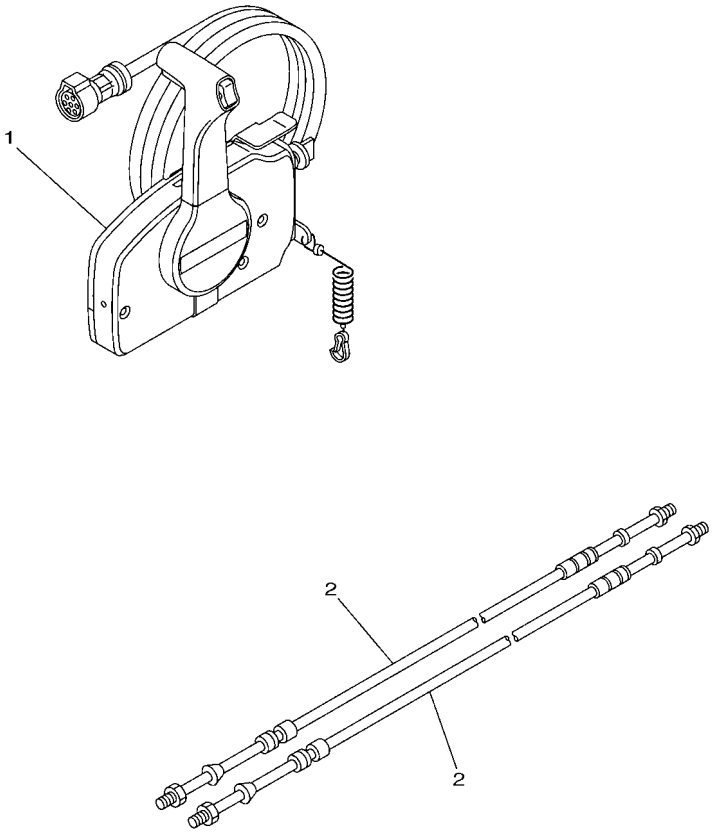

63PD370-P320

REF. NO.	PART NO. CODIGO Nº	DESCRIPTION DESCRIPCION	EHD	ET				REMARKS OBSERVACIONES
1	703–48205–B2	REMOTE CONTROL ASSY (10P, PTT) REMOTO CONTROL COMPL. (10P)		1				AP WITH PT/T SW. AP WITH PT/T SW.
2	701–48310–90	CABLE, REMOTE CONTROL L=11F CABLE CONTROL REMOTO L=11F		2				UR UR
	701–48320–00	CABLE, REMOTE CONTROL L=12F CABLE CONTROL REMOTO L=12F		2				UR UR
	701–48320–20	CABLE, REMOTE CONTROL L=13F CABLE CONTROL REMOTO L=13F		2				UR UR
	701–48320–50	CABLE, REMOTE CONTROL L=15F CABLE CONTROL REMOTO L=15F		2				UR UR
	701–48320–80	CABLE, REMOTE CONTROL L=17F CABLE CONTROL REMOTO L=17F		2				UR UR

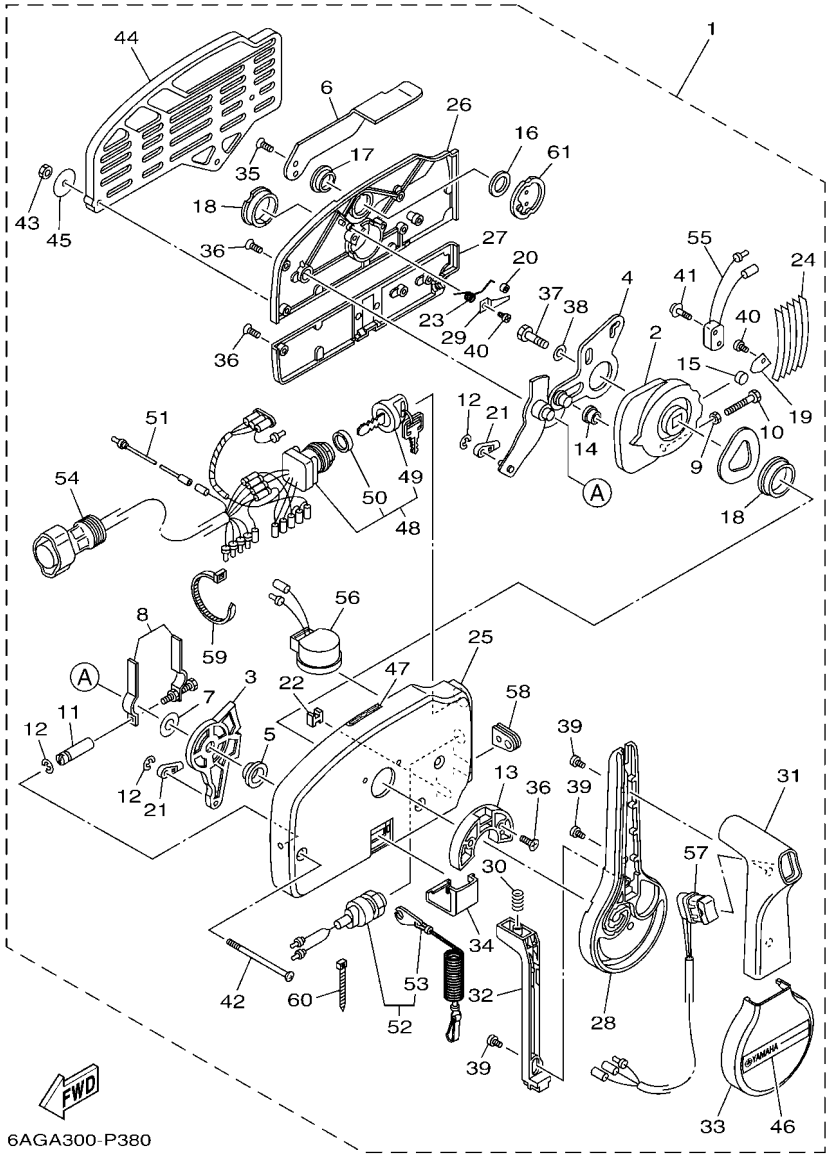

FIG. 33 REMOTE CONTROL ASSY — CONTROL REMOTO COMPL

REF. NO.	PART NO. CODIGO Nº	DESCRIPTION DESCRIPCION	EHD	ET				REMARKS OBSERVACIONES
1	703–48205–B2	REMOTE CONTROL ASSY (10P, PTT) REMOTO CONTROL COMPL. (10P)		1				AP WITH PT/T SW. AP WITH PT/T SW.
2	703–48232–00	.GEAR .ENGRANAJE 1		1				
3	703–48271–00	.ARM, SHIFT .BRAZO CAMBIADOR		1				
4	703–48261–01	.ARM, THROTTLE .BRAZO ACELERADOR		1				
5	703–48235–00	.BUSHING .BUJE		1				
6	703–48152–10	.KNOB, FREE ACCEL. .PERILLA		1				
7	703–48268–00	.SPACER .ESPACIADOR 3		1				
8	703–48264–00	.FRICTION, THROTTLE .FRICCION DE ACELERADOR		1				
9	95380–05600	.NUT .TUERCA		1				
10	97380–05025	.BOLT .TORNILLO HEXAGONAL		1				
11	703–48265–10	.SHAFT, FRICTION .EJE FRICCION		1				
12	93430–06024	.CIRCLIP .SEGURO		3				
13	703–48245–00	.PLATE, LOCK .PLACA CERRADURA		1				
14	703–48252–00	.ROLLER, CAM .RODILLO LEVA		1				
15	701–48248–00	.ROLLER, FREE ACCEL. .RODILLO ACELERADOR LIBRE		1				
16	703–48198–00	.WASHER, WAVE .RONDANA ONDULADA 3		1				
17	703–48243–00	.BUSHING .BUJE 3		1				
18	703–48236–00	.BUSHING 1 .BUJE		2				
19	703–48189–00	.RETAINER .RETENEDOR		1				
20	703–48234–00	.ROLLER, DETENT .RODILLO		1				
21	703–48345–01	.CABLE END, REMOTE CONTROL 2 .TERMINAL CABLE DE CONTROL REMO		2				
22	703–48358–00	.ANCHOR, CABLE .ABRAZADERA CABLE		1				
23	703–48244–00	.SPRING, FREE ACCEL. .RESORTE ACELERADOR LIBRE		1				
24	703–48238–00	.SPRING, DETENT .RESORTE		5				
25	703–48211–10	.HOUSING,1 .CAJA		1				
26	703–48212–10	.BACK PLATE 1 .PLACA TRASERA 1		1				
27	703–48213–10	.BACK PLATE 2 .PLACA TRASERA 2		1				

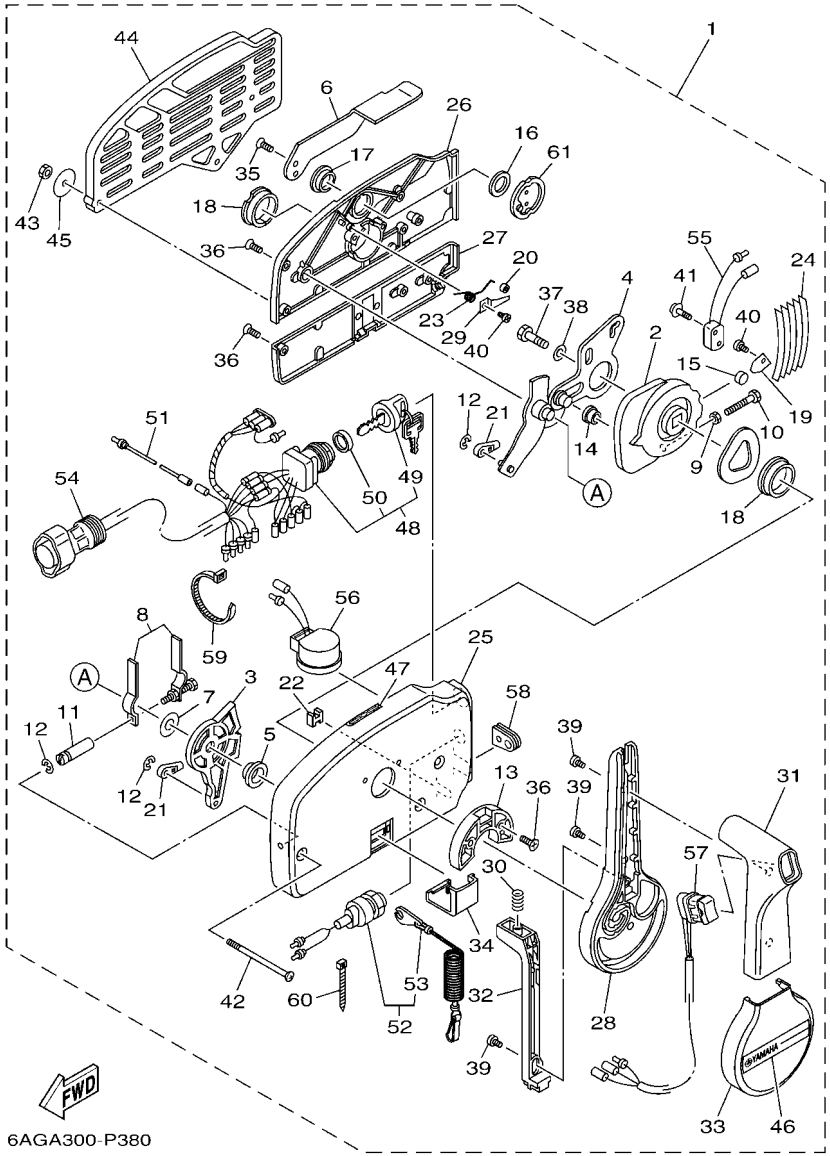

FIG. 33 REMOTE CONTROL ASSY — CONTROL REMOTO COMPL

REF. NO.	PART NO. CODIGO Nº	DESCRIPTION DESCRIPCION	EHD	ET				REMARKS OBSERVACIONES
28	703–48221–10	.LEVER, CONTROL .PALANCA CONTROL		1				
29	703–48246–00	.SPACER .ESPACIADOR		1				
30	703–48227–00	.SPRING, NEUTRAL LOCK .RESORTE DE SEGURO		1				
31	703–48222–20	.GRIP, CONTROL LEVER .MANGO DE PALANCA CONTROL		1				SINGLE SINGLE
32	703–48223–10	.LOCK, NEUTRAL .CERRADURA NEUTRO		1				
33	703–48225–10	.COVER .CUBIERTA		1				
34	703–48219–10	.COVER, LEAD .CUBIERTA		1				
35	703–48281–00	.SCREW .TORNILLO 1		2				
36	703–44189–20	.SCREW .TORNILLO		7				
37	97380–08030	.BOLT .TORNILLO HEXAGONAL		1				
38	92990–08600	.WASHER, PLATE .ARANDELA PLANA		1				
39	703–48128–10	.SCREW 2 .TORNILLO 2		3				
40	98580–04006	.SCREW, PAN HEAD .TORNILLO DE CABEZA CRUZADA		2				
41	703–48129–00	.SCREW 3 .TORNILLO 3		2				
42	703–44189–30	.SCREW .TORNILLO		3				
43	95380–06600	.NUT, HEXAGON .TUERCA		3				
44	703–48293–10	.SPACER, REMOTE CONTROL .ESPACIADOR		1				SINGLE SINGLE
45	701–48287–00	.WASHER .ARANDELA		3				
46	703–48215–10	.GRAPHIC .CALCOMANIA 1		1				
47	6X3–44191–00	.INDICATOR, SHIFT .INDICADOR DE CAMBIOS		1				
48	703–82510–13	.MAIN SWITCH ASSY .CONJUNTO DE LLAVE IGNICION		1				PRIME START PRIME START
49	676–82577–01	..CAP, KEY ..TAPA		1				
50	703–82532–00	..CAP ..TAPA		1				
51	703–82531–00	.WIRE, LEAD (L70) .CABLE CONDUCTOR (L70)		1				
52	688–82575–02	.ENGINE STOP SWITCH ASSY .INTERRUPTOR DE PARADA COMPL		1				
53	682–82556–00	..LANYARD, STOP SWITCH ..CORDON DE INTERRUPTOR PARADA		1				
54	688–8258A–20	.EXTENSION, WIRE HARNESS (4.9M) .EXTENSION, ARNES DE CABLES (4.		1				(10P) (10P)

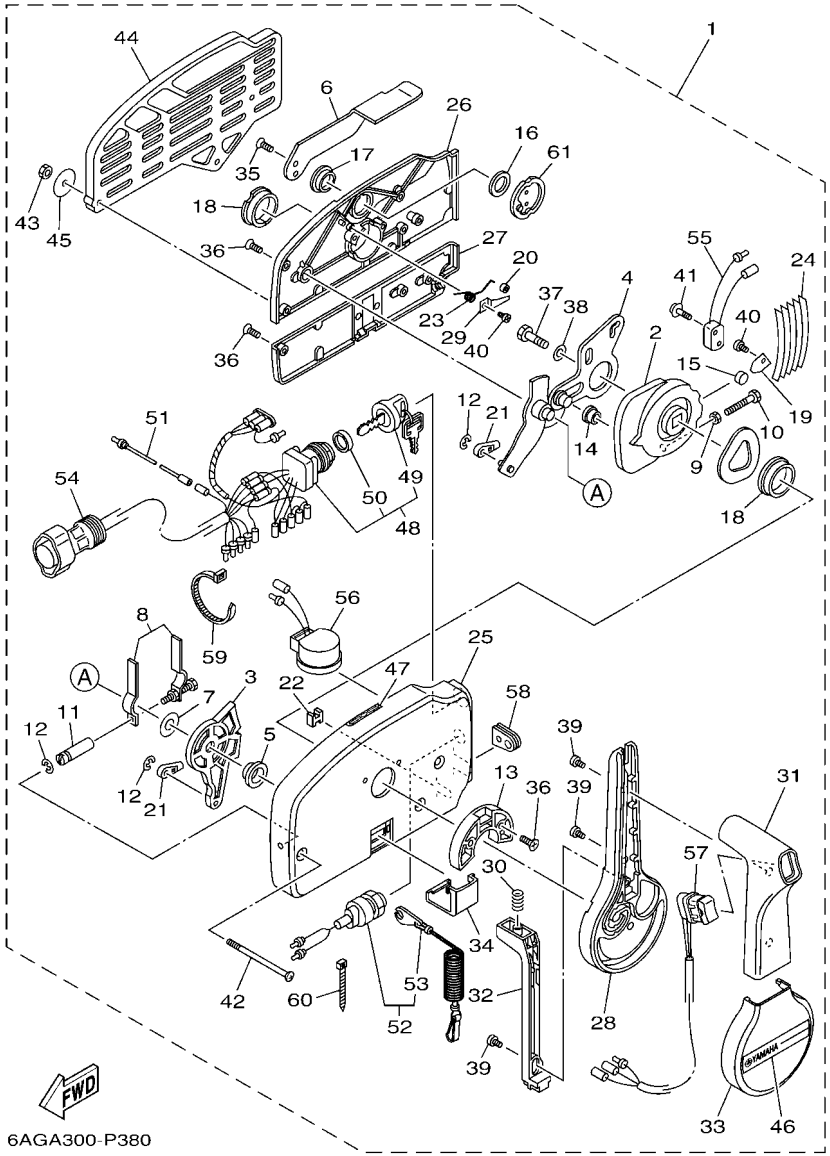

FIG. 33 REMOTE CONTROL ASSY — CONTROL REMOTO COMPL

REF. NO.	PART NO. CODIGO Nº	DESCRIPTION DESCRIPCION	EHD	ET				REMARKS OBSERVACIONES
55	703–82540–00	.NEUTRAL SWITCH ASSY .INTERRUPTOR NEUTRAL COMPL		1				
56	703–83383–11	.BUZZER .ZUMBADOR		1				
57	703–82563–31	.TRIM & TILT SWITCH ASSY .INTERRUPTOR DE INCLINACION		1				
58	703–48284–00	.GROMMET .TAPON		1				
59	703–82591–00	.BAND .BANDA		1				
60	703–82592–00	.BAND .BANDA		1				
61	703–48153–00	.SHAFT, FREE ACCEL. .EJE		1				

FIG. 34 METER MEDIDOR

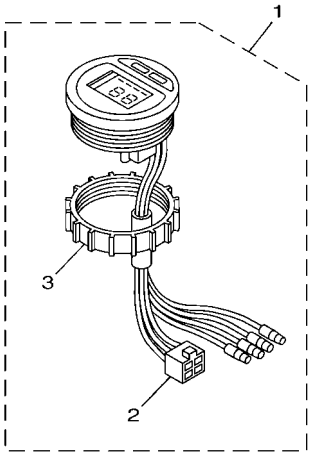

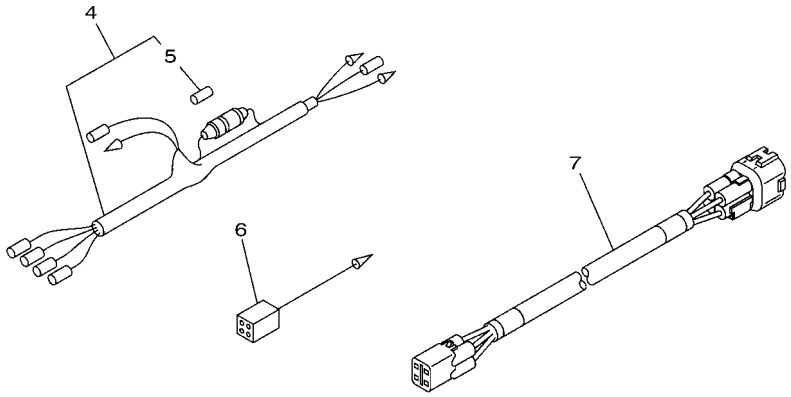

60AJ200-R290

REF. NO.	PART NO. CODIGO Nº	DESCRIPTION DESCRIPCION	EHD	ET				REMARKS OBSERVACIONES
1	6Y5–8350T–E0	TACHOMETER ASSY TACOMETRO COMPLETO		1				AP AP
2	9E450–04533	.CONNECTOR .CONECTOR		1				F-4-W F-4-W
3	6Y8–84383–00	.NUT, RING .TUERCA ANILLO		1				
4	6Y5–83553–00	WIRE, LEAD (L=2.5M) CABLE CONDUCTOR (L=2.5M)		1				AP AP
5	1E6–82151–00	.FUSE (10A) .FUSIBLE (10A)		1				
6	6Y5–82117–00	WIRE, LEAD (BLACK) (L300) CABLE, CONDUCTOR (NEGRO)		1				AP AP
7	6Y5–83653–20	WIRE, LEAD (L=7.0M) CABLE CONDUCTOR (L=7.0M)		1				AP 4P,7M AP 4P,7M

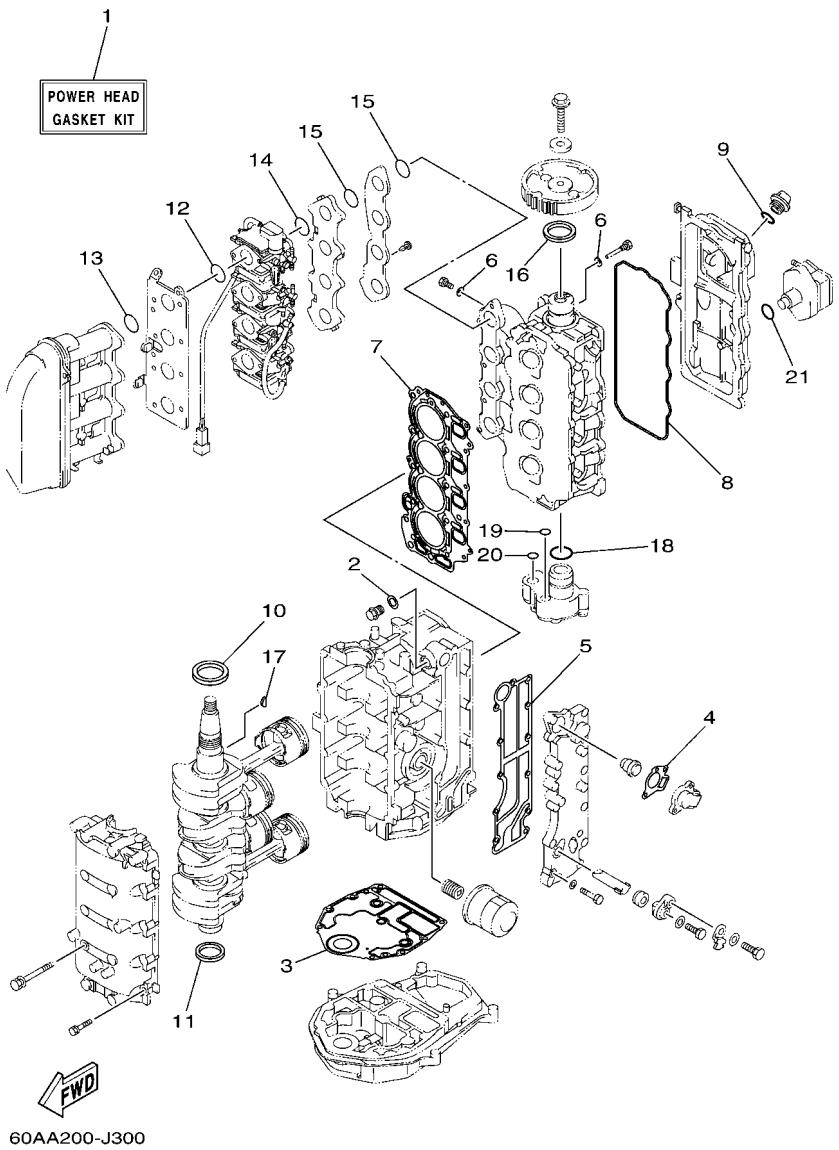

FIG. 35 REPAIR KIT 1 — ESTUCHE REPARATION 1

REF. NO.	PART NO. CODIGO Nº	DESCRIPTION DESCRIPCION	EHD	ET				REMARKS OBSERVACIONES
1	60A–W0001–00	POWER HEAD GASKET KIT JUEGO DE EMPAQUE DE MOTOR	1	1				
2	90430–14115	.GASKET .JUNTA	1	1				
3	6BG–11351–00	.GASKET, CYLINDER .JUNTA, DE CILINDRO	1	1				
4	62Y–12414–00	.GASKET, COVER .EMPAQUE	1	1				
5	6C5–41114–00	.GASKET, EXHAUST OUTER COVER .EMPAQUE	1	1				
6	90430–06014	.GASKET .JUNTA	5	5				
7	62Y–11181–00	.GASKET, CYLINDER HEAD 1 .JUNTA, DE CULATA 1	1	1				
8	62Y–11356–00	.SEAL, CYLINDER 2 .RETEN ACEITE CILINDRO 2	1	1				
9	93210–24M79	.O-RING .ANILLO O	1	1				
10	93102–43M42	.OIL SEAL .SELLO ACEITE	1	1				
11	93101–35002	.OIL SEAL .SELLO ACEITE	1	1				
12	93210–35M86	.O-RING .ANILLO O	4	4				
13	93210–38MH3	.O-RING .ANILLO O	4	4				
14	93210–30MH4	.O-RING .ANILLO O	4	4				
15	93210–35M86	.O-RING .ANILLO O	8	8				
16	93102–37M40	.OIL SEAL .SELLO ACEITE	1	1				
17	90280–04M06	.KEY, WOODRUFF .CUNA WOODRUFF	1	1				
18	93210–33MH2	.O-RING .ANILLO O	1	1				
19	93210–12MG9	.O-RING .ANILLO O	1	1				
20	93210–14515	.O-RING .ANILLO O	1	1				
21	93210–24M79	.O-RING .ANILLO O	1	1				

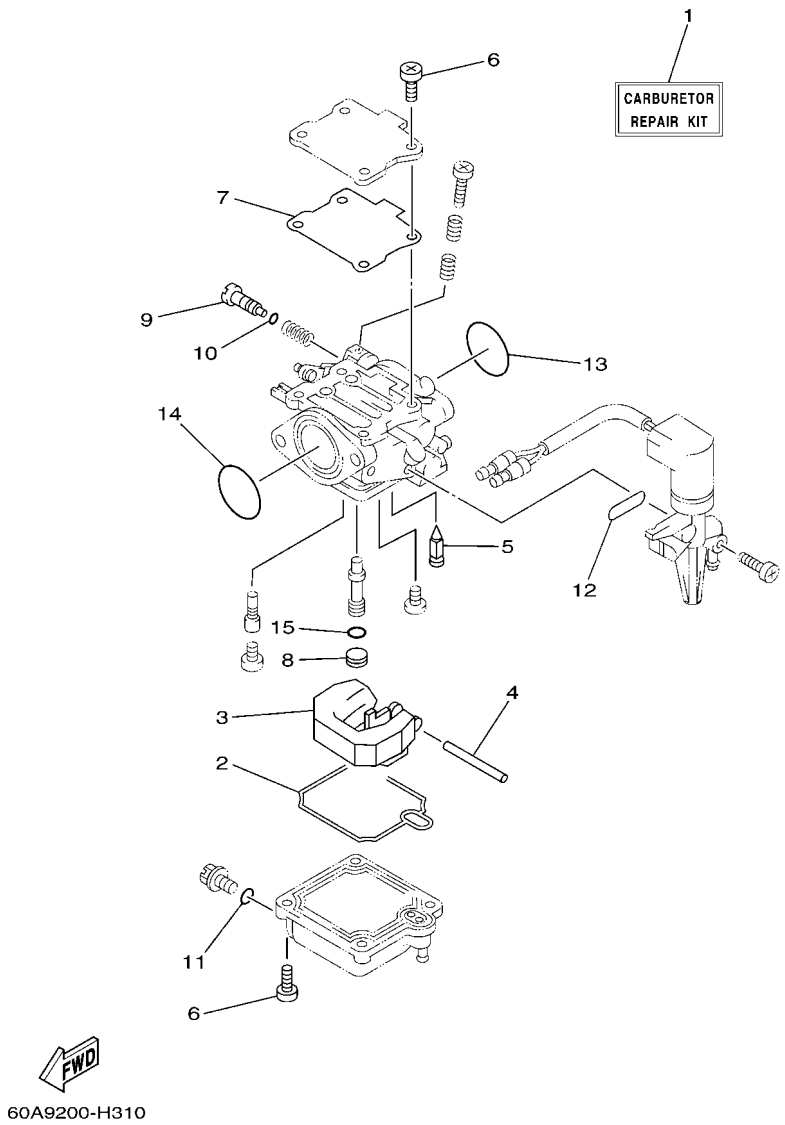

FIG. 36 REPAIR KIT 2 — ESTUCHE REPARATION 2

REF. NO.	PART NO. CODIGO Nº	DESCRIPTION DESCRIPCION	EHD	ET				REMARKS OBSERVACIONES
1	62Y–W0093–11	CARBURETOR REPAIR KIT KIT REPARACION CARBURADOR	1	1				
2	62Y–14384–30	.GASKET, FLOAT CHAMBER .EMPAQUE DE CAMARA DE BOIA	1	1				
3	6L2–14385–00	.FLOAT .BOIA	1	1				
4	6E5–14386–01	.PIN, FLOAT .PASADOR DE BOIA	1	1				
5	62Y–14392–00	.VALVE, NEEDLE .VALVULA DE AGUJA	1	1				
6	62Y–14321–00	.SCREW, THROTTLE .TORNILLO DE OBTURADOR	8	8				
7	62Y–14399–30	.GASKET .EMPAQUE	1	1				
8	62Y–14355–30	.PLUG .TAPON	1	1				
9	62Y–14323–30	.SCREW, AIR ADJUSTING .TORNILLO DE AJUSTE DE AIRE	1	1				
10	2T4–14397–00	.O-RING .ANILLO O	1	1				
11	652–14397–00	.O-RING .ANILLO O	1	1				
12	62Y–14398–30	.GASKET .EMPAQUE	1	1				
13	93210–30MH4	.O-RING .ANILLO O	4	4				
14	93210–35M86	.O-RING .ANILLO O	4	4				
15	62Y–14227–00	.O-RING .ANILLO O	1	1				

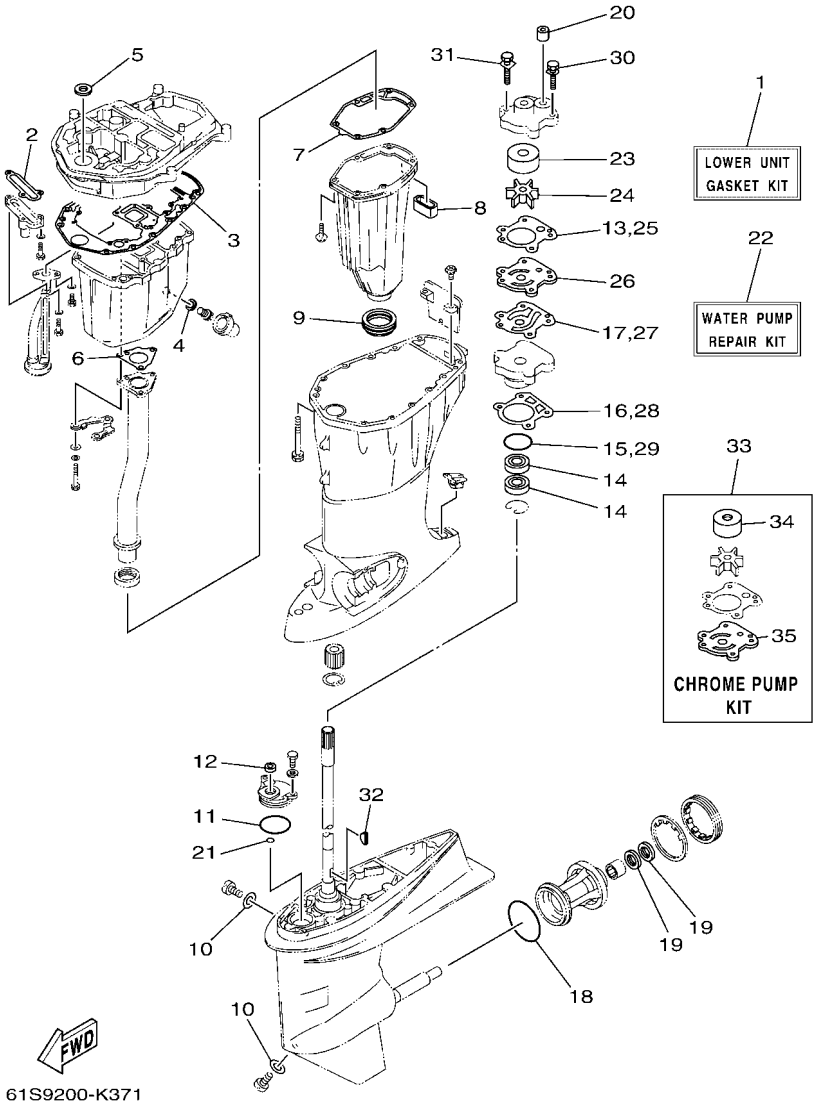

FIG. 37 REPAIR KIT 3 — ESTUCHE REPARATION 3

REF. NO.	PART NO. CODIGO Nº	DESCRIPTION DESCRIPCION	EHD	ET				REMARKS OBSERVACIONES
1	61S–W0001–20	LOWER UNIT GASKET KIT JUEGO DE JUNTA UNIDAD INFERIOR	1	1				
2	62Y–13475–00	.GASKET .EMPAQUE	1	1				
3	61S–15312–00	.GASKET, OIL PAN .EMPAQ BANDEJA DE ACEITE	1	1				
4	90430–14M09	.GASKET .JUNTA	1	1				
5	93103–18011	.OIL SEAL .SELLO ACEITE	1	1				
6	64J–41133–10	.GASKET, EXHAUST MANIFOLD 1 .EMPAQUE ESCAPE MULTIPLE	1	1				
7	6BG–41134–00	.GASKET, EXHAUST MANIFOLD .EMPAQUE	1	1				
8	62Y–45127–00	.SEAL .SELLO DE GOMA	1	1				
9	663–45123–00	.GASKET, MUFFLER .EMPAQUE SILENCIADOR	1	1				
10	90430–08003	.GASKET .JUNTA	2	2				
11	93210–49046	.O-RING .ANILLO O	1	1				
12	93106–09014	.OIL SEAL .SELLO ACEITE	1	1				
13	6H3–44315–A0	.GASKET, WATER PUMP .EMPAQUE	1	1				
14	93101–23070	.OIL SEAL .SELLO ACEITE	2	2				
15	93210–46044	.O-RING .ANILLO O	1	1				
16	688–44316–A0	.GASKET, WATER PUMP .EMPAQUE	1	1				
17	6H3–44324–A0	.GASKET, CARTRIDGE .EMPAQUE	1	1				
18	93210–86M39	.O-RING .ANILLO O	1	1				
19	93101–25M03	.OIL SEAL .SELLO ACEITE	2	2				
20	663–44366–00	.DAMPER, WATER SEAL 2 .GOMA DEL SELLO DE AGUA 2	1	1				
21	93210–07003	.O-RING .ANILLO O	1	1				
22	6H3–W0078–02	WATER PUMP REPAIR KIT ESTUCHE REPARACION BOMBA AGUA	1	1				
23	663–44322–00	.INSERT, CARTRIDGE .CARTUCHO	1	1				
24	6H3–44352–00	.IMPELLER .IMPULSOR	1	1				
25	6H3–44315–A0	.GASKET, WATER PUMP .EMPAQUE	1	1				
26	6H3–44323–00	.OUTER PLATE, CARTRIDGE .PLACA EXTERIOR DEL CARTUCHO	1	1				
27	6H3–44324–A0	.GASKET, CARTRIDGE .EMPAQUE	1	1				

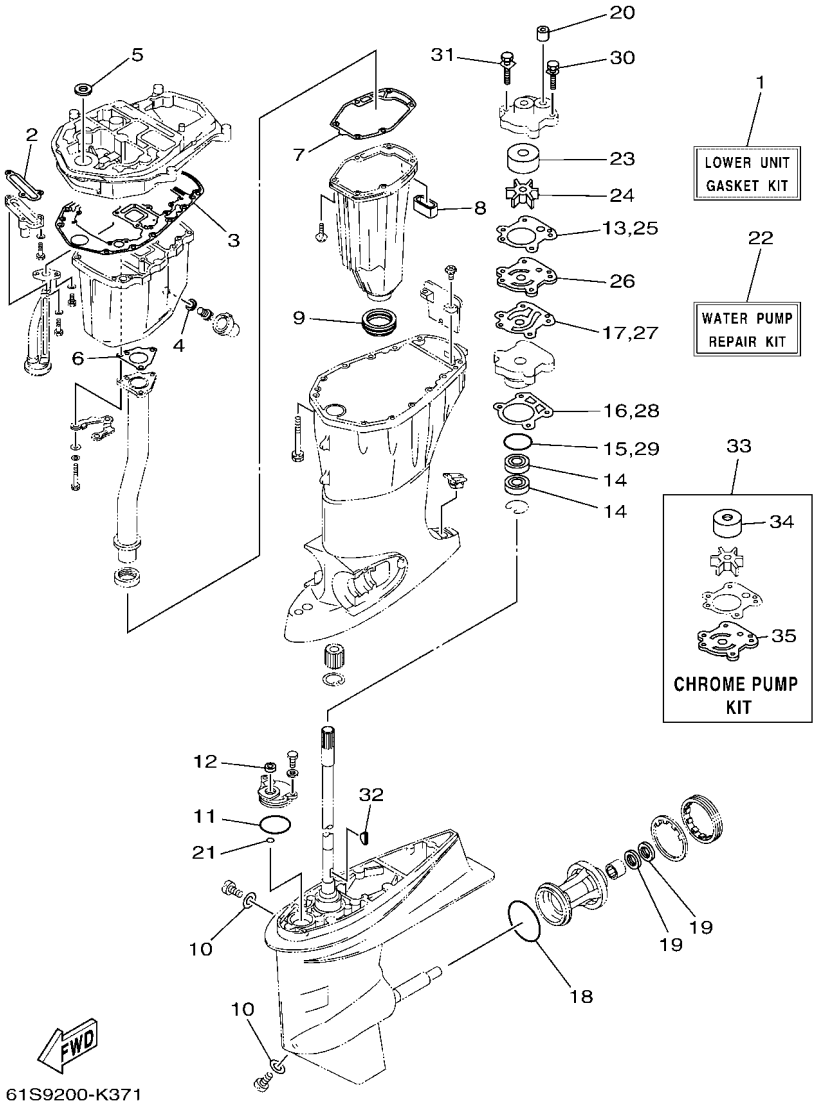

FIG. 37 REPAIR KIT 3 — ESTUCHE REPARATION 3

REF. NO.	PART NO. CODIGO Nº	DESCRIPTION DESCRIPCION	EHD	ET				REMARKS OBSERVACIONES
28	688–44316–A0	.GASKET, WATER PUMP .EMPAQUE	1	1				
29	93210–46044	.O-RING .ANILLO O	1	1				
30	90119–08M14	.BOLT, WITH WASHER .TORNILLO CON ARANDELA	2	2				
31	90119–08M33	.BOLT, WITH WASHER .TORNILLO CON ARANDELA	2	2				
32	90280–03M03	.KEY, WOODRUFF .CUNA WOODRUFF	1	1				
33	6H3–W0078–1A	CHROME PUMP KIT ESTUCHE REPARACION BOMBA AGUA	1	1				
34	663–44322–40	.INSERT, CARTRIDGE .CARTUCHO	1	1				
35	6H3–44323–40	.OUTER PLATE, CARTRIDGE .PLACA EXTERIOR DEL CARTUCHO	1	1				

NUMERICAL INDEX
INDICE NUMERICO

PART NO. CODIGO Nº	REF. NO.
64J–11111–10–9S	5 – 2
68T–11112–00	26 – 30
62Y–11119–00	5 – 23
62Y–11133–30	5 – 3
62Y–11168–00	5 – 19
62Y–11181–00	5 – 13
	35 – 7
62Y–11191–02–9S	5 – 17
6G8–11197–A0	5 – 7
62Y–11325–00	1 – 4
	1 – 11
	3 – 26
	26 – 31
6G8–11325–00	1 – 5
	5 – 5
66M–11327–00–94	3 – 28
	26 – 33
66M–11328–00	3 – 27
	26 – 32
6BG–11351–00	3 – 9
	35 – 3
62Y–11356–00	5 – 21
	35 – 8
69W–11411–10	4 – 3
6BG–11416–00	4 – 4
6BG–11416–10	4 – 4
6BG–11416–20	4 – 4
6BG–11416–30	4 – 4
62Y–11536–10	9 – 13
62Y–11537–10	9 – 3
6H4–11545–00	11 – 14
62Y–11557–00	9 – 14
62Y–11575–00	27 – 1
62Y–11590–10	9 – 8
64J–11603–01	4 – 9
64J–11604–01	4 – 9
64J–11605–01	4 – 9
62Y–11631–10–96	4 – 8
62Y–11633–00	4 – 10
62Y–11635–10	4 – 8
62Y–11636–10	4 – 8
6C5–11650–10	4 – 5
6C5–11654–00	4 – 6
6CJ–11656–00	4 – 7
6CJ–11656–10	4 – 7
6CJ–11656–20	4 – 7
6CJ–11656–30	4 – 7
64J–12111–10	6 – 1

PART NO. CODIGO Nº	REF. NO.
51Y–12114–00	6 – 4
62Y–12116–00	6 – 3
30X–12117–00	6 – 5
30X–12118–00	6 – 6
51Y–12119–00	6 – 7
64J–12121–10	6 – 2
62Y–12146–00	6 – 8
62Y–12151–00	6 – 9
62Y–12158–00	6 – 11
64J–12159–00	6 – 10
62Y–12171–00	9 – 2
62Y–12216–00	6 – 14
62Y–12231–00	6 – 15
64J–12238–00	6 – 12
64J–12279–00	6 – 13
6G8–12411–03	1 – 1
	3 – 10
688–12412–00	3 – 11
6H3–12413–00–9S	3 – 12
62Y–12414–00	1 – 2
	3 – 13
	35 – 4
62Y–12481–10	3 – 23
66M–12535–00	3 – 29
	26 – 34
6C5–12858–00	3 – 21
62Y–13131–01	10 – 21
69W–13300–01	9 – 17
62Y–13411–00	27 – 4
62Y–13437–63	11 – 17
5GH–13440–60	1 – 3
	3 – 20
62Y–13448–00	7 – 41
62Y–13475–00	27 – 2
	37 – 2
62Y–13586–30	7 – 3
62Y–14157–30	8 – 14
62Y–14212–00	8 – 26
62Y–14227–00	8 – 34
	36 – 15
62Y–14243–00	8 – 32
62Y–14271–00	7 – 34
62Y–14291–30	7 – 25
62Y–14321–00	8 – 13
	36 – 6
62Y–14321–10	8 – 22
62Y–14323–30	8 – 20
	36 – 9

PART NO. CODIGO Nº	REF. NO.
650–14327–01	7 – 2
62Y–14334–00	8 – 21
62Y–14341–30	8 – 16
64J–14342–20	8 – 18
62Y–14343–57	8 – 17
62Y–14343–58	8 – 17
62Y–14343–62	8 – 17
62Y–14343–63	8 – 17
64J–14349–11	7 – 18
64J–14349–21	7 – 19
64J–14349–31	7 – 20
64J–14349–40	7 – 29
64J–14349–50	7 – 30
62Y–14355–30	8 – 19
	36 – 8
62Y–14369–30	7 – 1
62Y–14380–10	8 – 31
62Y–14380–20	8 – 31
62Y–14381–30	8 – 5
62Y–14381–40	8 – 6
62Y–14381–50	8 – 7
62Y–14381–61	8 – 8
62Y–14383–30	8 – 24
62Y–14384–30	8 – 9
	36 – 2
6L2–14385–00	8 – 10
	36 – 3
6E5–14386–01	8 – 11
	36 – 4
62Y–14392–00	8 – 12
	36 – 5
2T4–14397–00	8 – 23
	36 – 10
652–14397–00	8 – 25
	36 – 11
62Y–14398–30	8 – 29
	36 – 12
62Y–14399–30	8 – 15
	36 – 7
62Y–14440–00	7 – 4
62Y–14485–00	5 – 18
62Y–14567–30	8 – 30
62Y–14567–40	8 – 30
64J–14585–00	7 – 15
64J–14711–00–CA	26 – 9
62Y–14901–30	8 – 1
62Y–14902–30	8 – 2
62Y–14903–30	8 – 3

PART NO. CODIGO Nº	REF. NO.
62Y–14904–31	8 – 4
64J–15100–01	3 – 2
64J–15311–02–9S	27 – 7
61S–15312–00	27 – 8
	37 – 3
62Y–15316–00	27 – 10
62Y–1531A–00	7 – 43
62Y–1532B–00	7 – 26
62Y–15362–00	27 – 14
6G8–15363–00	5 – 25
62Y–15373–10	7 – 44
6C5–22435–00	24 – 20
6CJ–22471–10	24 – 13
62Y–24135–00	7 – 33
6YJ–24167–00	30 – 7
6YJ–24201–20	30 – 1
6YJ–24260–10	30 – 3
6Y1–24268–00	30 – 6
6G1–24304–10	10 – 1
6G1–24305–05	30 – 13
6Y1–24305–06	30 – 15
61J–24306–04	30 – 8
62Y–24311–30	8 – 28
62Y–24312–00	7 – 7
62Y–24313–30	7 – 8
62Y–24313–40	7 – 9
62Y–24313–50	7 – 10
62Y–24313–61	7 – 11
62Y–24313–70	7 – 12
69W–24313–80	7 – 14
62Y–24313–90	8 – 35
62Y–24314–00	7 – 31
61N–24329–00	17 – 26
6Y1–24329–00	30 – 5
650–24351–51	30 – 12
61J–24360–00	30 – 10
64J–24364–00	18 – 52
63D–24367–00	18 – 54
62Y–24374–01	10 – 26
62Y–24378–00	7 – 23
	7 – 32
688–24378–00	3 – 17
62Y–24410–04	10 – 17
62Y–24411–02	10 – 19
6C5–24414–00	10 – 27
62Y–24415–01	10 – 18
62Y–24423–00	10 – 20
62Y–24444–01	10 – 23

PART NO. CODIGO Nº	REF. NO.
62Y–24454–00	10 – 22
68V–24469–01	10 – 9
6C5–24471–00	10 – 24
6GL–24474–00	10 – 29
68V–24521–01	10 – 6
64J–24560–10	10 – 5
61N–24563–10	1 – 7
	10 – 7
62Y–24566–01	10 – 10
6YJ–24610–01	30 – 2
692–26301–03	18 – 20
6G8–26363–00	20 – 31
62Y–28100–00	10 – 32
62Y–28100–10	10 – 32
62Y–41113–30–9S	3 – 22
6C5–41114–00	3 – 24
	35 – 5
64J–41116–00	26 – 5
64J–41131–10	26 – 3
64J–41133–10	26 – 4
	37 – 6
6BG–41134–00	26 – 11
	37 – 7
64J–41137–03–CA	26 – 1
6F5–41237–00	20 – 18
662–41237–01	20 – 20
62Y–41241–00	20 – 19
62Y–41262–30	7 – 13
692–42111–12–8D	18 – 3
692–42115–00	18 – 11
664–42119–00	18 – 4
692–42121–02–8D	18 – 2
663–42126–01	18 – 48
663–42133–01	18 – 15
692–42134–03–8D	18 – 16
692–42135–00	18 – 14
61U–42137–00	18 – 6
663–42138–00	18 – 12
62Y–42154–00	20 – 22
62Y–42159–01	20 – 34
62Y–42171–00	20 – 23
6G1–42177–00	18 – 5
64J–42191–00	18 – 40
64J–42192–00	18 – 42
62Y–42335–20	20 – 28
64J–42508–00	19 – 1
63D–42510–12–8D	23 – 1
64J–42515–00	19 – 6

PART NO. CODIGO Nº	REF. NO.
64J–42518–00	19 – 2
67G–42528–00	19 – 3
61S–42610–20	2 – 1
62Y–42613–01–8D	2 – 3
62Y–42615–00	2 – 10
62Y–4261A–00	2 – 2
61N–42628–00	2 – 11
62Y–42651–00	2 – 8
62Y–42652–00	2 – 5
60A–42675–00	2 – 14
60A–42676–00	2 – 16
60A–42677–10	2 – 12
61S–42678–20	2 – 13
6AJ–4267A–00	2 – 17
60A–42681–00	2 – 15
62Y–42711–04–8D	17 – 1
62Y–42711–14–8D	17 – 1
62Y–42715–01	20 – 6
62Y–42716–00	17 – 7
65W–42717–00	17 – 2
6E5–42724–00	17 – 8
62Y–42725–20	17 – 17
62Y–42725–30	17 – 17
6H4–42726–00	17 – 29
688–42726–10	17 – 29
62Y–42727–00	17 – 18
64J–42727–00	17 – 18
6H3–42727–00	17 – 27
62Y–42738–01–8D	17 – 16
62Y–42741–00–8D	17 – 20
62Y–42748–00	17 – 33
6BG–42748–00	17 – 4
69M–42758–01	14 – 5
6EE–42794–40	17 – 34
6EE–42794–50	17 – 35
62Y–42815–00	17 – 10
62Y–42828–00–8D	17 – 9
64J–43107–02–8D	21 – 29
62Y–43107–22–8D	21 – 29
62Y–43111–00–8D	21 – 1
	22 – 1
69W–43111–00–8D	21 – 1
	22 – 1
62Y–43112–00–8D	21 – 2
	22 – 2
69W–43112–00–8D	21 – 2
	22 – 2
69D–43126–01	21 – 36

NUMERICAL INDEX
INDICE NUMERICO

PART NO. CODIGO Nº	REF. NO.
6E5–43126–02	22 – 31
63D–43131–01	21 – 11
	22 – 11
6G5–43144–00	21 – 24
	22 – 24
6E5–43145–01	31 – 9
6G5–43148–00	21 – 20
	22 – 20
688–43160–01	21 – 25
	22 – 25
688–43165–00	21 – 26
	22 – 26
6H5–43181–03	21 – 15
	22 – 15
6H5–43185–03	21 – 16
	22 – 16
63D–43311–13–8D	21 – 9
	22 – 9
682–43318–01	21 – 34
69D–43631–00	21 – 33
63D–43691–00	21 – 32
6C5–43800–12	24 – 1
6CJ–43801–10	24 – 3
6CJ–43804–11	25 – 3
6CJ–43805–10	25 – 2
6EK–4380F–00	25 – 6
6C5–4380G–00	24 – 26
6C5–4380K–11	24 – 22
6CJ–4380R–10	24 – 8
6CJ–43810–10	24 – 2
6C5–43816–00	24 – 25
6C5–43817–10	24 – 23
62Y–43818–00	21 – 40
	22 – 35
6CJ–4381B–10	24 – 17
6CJ–43821–10	24 – 5
62Y–43822–00	24 – 4
6CJ–43829–10	24 – 61
6EK–4382E–00	24 – 35
6D8–4382L–00	24 – 50
6C5–43830–10	24 – 28
6C5–43831–00	24 – 62
6D8–43841–00	24 – 29
6D8–43843–00	24 – 45
6D8–43844–00	24 – 44
6H1–43844–10	24 – 48
6CJ–43845–10	24 – 59
69A–4384F–00	24 – 33

PART NO. CODIGO Nº	REF. NO.
6H1–4384G–11	24 – 47
62X–4384H–00	24 – 19
6D8–4384M–00	24 – 32
6D8–43851–00	24 – 40
6C6–43853–00	24 – 37
6C5–43854–00	24 – 52
6C5–43855–10	24 – 42
6C5–43856–10	24 – 49
6C5–43861–00	24 – 11
	24 – 15
6CJ–43862–10	25 – 12
6CJ–43863–00	24 – 7
	24 – 9
6D8–43863–00	24 – 57
62X–4386K–00	25 – 7
6C5–43871–00	24 – 12
6C5–43875–00	24 – 16
6H1–43875–00	24 – 58
6CJ–43879–10	25 – 8
6C6–4387G–00	24 – 36
6CJ–43880–12	25 – 1
6CJ–43881–10	25 – 10
6EK–43882–00	25 – 11
6H1–43883–00	24 – 30
6EK–43892–00	25 – 4
69J–43894–00	24 – 31
6C5–43895–00	24 – 51
6C5–43899–00	24 – 18
69J–4389J–00	24 – 24
	24 – 39
62Y–44112–00	20 – 8
64J–44113–00	18 – 28
62Y–44116–01	20 – 29
62Y–44117–01	20 – 2
62Y–44118–00–94	20 – 7
62Y–44120–02	20 – 5
62Y–44120–22	20 – 5
69W–44121–00	20 – 1
688–44122–00	20 – 16
62Y–44135–00	20 – 25
64J–44150–01	28 – 64
692–44159–01	18 – 31
663–44173–00	18 – 32
703–44189–20	33 – 36
703–44189–30	33 – 42
6K5–44191–00	18 – 29
6X3–44191–00	33 – 47
6H3–44311–00	28 – 20

PART NO. CODIGO Nº	REF. NO.
6H3–44315–A0	28 – 22
	37 – 13
	37 – 25
688–44316–A0	28 – 30
	37 – 16
	37 – 28
663–44322–00	37 – 23
663–44322–40	28 – 21
	37 – 34
6H3–44323–00	37 – 26
6H3–44323–40	28 – 31
	37 – 35
6H3–44324–A0	28 – 32
	37 – 17
	37 – 27
6H3–44341–01–CA	28 – 26
6H3–44352–00	28 – 24
	37 – 24
62Y–44361–00	29 – 1
62Y–44361–20	29 – 1
663–44366–00	28 – 23
	37 – 20
663–44367–00	29 – 2
6BL–44391–00	17 – 3
64J–44514–00	23 – 25
62Y–44514–10	23 – 25
69W–44526–01	23 – 27
66T–44526–30	23 – 27
663–44551–02–8D	23 – 9
663–44552–01	23 – 18
62Y–44553–01–8D	23 – 22
62Y–44555–00	23 – 11
64J–44575–00	23 – 16
663–44575–00	23 – 16
62Y–45111–21–8D	26 – 15
663–45123–00	26 – 13
	37 – 9
62Y–45127–00	26 – 12
	37 – 8
62Y–45151–00	26 – 18
6C5–45155–00	26 – 20
63D–45211–02–8D	26 – 23
6H1–45214–00	29 – 10
6H1–45215–00	29 – 11
65W–45251–00	1 – 9
	1 – 10
	21 – 5
	21 – 7

PART NO. CODIGO Nº	REF. NO.
65W–45251–00	22 – 5
	22 – 7
	22 – 29
663–45251–00	1 – 10
	21 – 30
64J–45300–32–8D	28 – 1
64J–45300–42–8D	28 – 1
67F–45301–00–8D	28 – 2
69W–45318–00	26 – 21
688–45321–00	28 – 12
67F–45331–00–CA	28 – 55
688–45341–10	28 – 10
67F–45371–00	1 – 14
	29 – 14
688–45375–00	29 – 9
663–45376–00	29 – 8
6E5–45378–00	28 – 16
688–45383–02	28 – 62
688–45384–02	28 – 63
64J–45501–30	28 – 36
64J–45501–40	28 – 36
688–45536–01	28 – 4
64J–45551–00	28 – 37
64J–45560–00	28 – 39
688–45567–01	28 – 7
688–45567–10	28 – 7
688–45567–20	28 – 7
688–45567–30	28 – 7
688–45567–40	28 – 7
688–45567–50	28 – 7
688–45567–60	28 – 7
67F–45571–00	28 – 54
67F–45576–00	28 – 57
688–45587–01	28 – 5
688–45587–10	28 – 5
688–45587–20	28 – 5
688–45587–30	28 – 5
688–45587–40	28 – 5
688–45587–50	28 – 5
688–45587–60	28 – 5
67F–45611–01	28 – 41
6D8–45631–00	28 – 42
688–45633–00	28 – 51
67F–45634–00	28 – 43
6H1–45635–00	28 – 45
6H1–45668–00	28 – 44
688–45932–60	29 – 21
6E5–45941–00	29 – 21

PART NO. CODIGO Nº	REF. NO.
6E5–45943–00	29 – 21
6E5–45945–01	29 – 21
6E5–45947–00	29 – 21
6E5–45949–00	29 – 21
6E5–45952–00	29 – 21
6E5–45954–00	29 – 21
6E5–45956–00	29 – 21
688–45987–01	29 – 16
67F–45997–00	29 – 17
64J–46132–10	26 – 37
62Y–46241–00	9 – 7
703–48128–10	33 – 39
703–48129–00	33 – 41
703–48152–10	33 – 6
703–48153–00	33 – 61
703–48189–00	33 – 19
703–48198–00	33 – 16
703–48205–B2	32 – 1
	33 – 1
703–48211–10	33 – 25
703–48212–10	33 – 26
703–48213–10	33 – 27
703–48215–10	33 – 46
703–48219–10	33 – 34
703–48221–10	33 – 28
703–48222–20	33 – 31
703–48223–10	33 – 32
703–48225–10	33 – 33
703–48227–00	33 – 30
703–48232–00	33 – 2
703–48234–00	33 – 20
703–48235–00	33 – 5
703–48236–00	33 – 18
703–48238–00	33 – 24
703–48243–00	33 – 17
703–48244–00	33 – 23
703–48245–00	33 – 13
703–48246–00	33 – 29
701–48248–00	33 – 15
703–48252–00	33 – 14
703–48261–01	33 – 4
703–48264–00	33 – 8
703–48265–10	33 – 11
703–48268–00	33 – 7
703–48271–00	33 – 3
703–48281–00	33 – 35
703–48284–00	33 – 58
701–48287–00	33 – 45

PART NO. CODIGO Nº	REF. NO.
703–48293–10	33 – 44
701–48310–90	32 – 2
701–48320–00	32 – 2
701–48320–20	32 – 2
701–48320–50	32 – 2
701–48320–80	32 – 2
700–48339–00	18 – 43
703–48345–01	33 – 21
703–48358–00	33 – 22
63D–48511–01	23 – 39
62Y–48538–00	20 – 33
64J–48538–00	20 – 33
63D–61350–00	31 – 1
63D–61351–00	31 – 2
64J–77123–00	26 – 14
62Y–81337–11	11 – 10
6K7–81338–01	11 – 11
69W–81800–00	16 – 1
6N7–81801–00	16 – 8
69W–81807–00	16 – 11
61A–81809–00	16 – 3
6N7–81810–00	16 – 5
6N7–81813–00	16 – 9
6N7–81820–00	16 – 10
62Y–81822–01	12 – 7
61A–81824–00	16 – 4
6K7–81826–11	16 – 14
6E5–8182A–10	16 – 17
6E5–8182E–10	16 – 15
6E5–8182F–10	16 – 16
6K7–8182G–10	16 – 6
6E5–8182K–10	16 – 18
6N7–81830–00	16 – 13
6N7–81840–00	16 – 7
6N7–81850–10	16 – 2
6N7–81857–00	16 – 12
6G1–81941–10	13 – 3
6L2–81945–00	13 – 5
62Y–81948–00	13 – 26
61A–81949–00	13 – 23
6H2–81949–01	13 – 22
6H1–81950–00	13 – 19
6G1–81952–00	13 – 4
64J–81960–10	13 – 7
6EE–81994–40	11 – 20
6EE–81994–50	11 – 21
6EE–81995–40	11 – 18
6EE–81995–50	11 – 19

NUMERICAL INDEX
INDICE NUMERICO

PART NO. CODIGO Nº	REF. NO.
6AG–81996–00	11 – 22
62Y–82105–01	13 – 10
62Y–82105–U1	13 – 10
6Y5–82117–00	34 – 6
6E5–82117–01	13 – 11
703–82119–00	13 – 15
682–82119–01	13 – 24
697–82127–01	23 – 24
63D–82148–00	21 – 3
	22 – 3
1E6–82151–00	34 – 5
663–82151–00	13 – 14
6G5–82152–00	13 – 12
6CJ–82181–10	25 – 5
6A0–82317–00	13 – 27
663–82317–01	11 – 12
6G8–82370–30	12 – 6
64J–82504–00	12 – 9
62Y–82509–00	7 – 27
703–82510–13	33 – 48
6H3–82510–21	15 – 7
697–8252E–02–8D	15 – 12
697–8252F–02–8D	15 – 13
703–82531–00	33 – 51
703–82532–00	15 – 9
	33 – 50
703–82540–00	33 – 55
6F5–82540–01	15 – 4
62Y–82544–00	7 – 28
64J–82553–00	14 – 7
62Y–82554–01	15 – 5
6C5–82555–00	15 – 6
682–82556–00	15 – 11
	33 – 53
62Y–82560–01	12 – 10
63D–82563–11	13 – 31
703–82563–31	33 – 57
688–82575–02	33 – 52
688–82575–12	15 – 10
676–82577–01	15 – 8
	33 – 49
61S–82581–00	15 – 20
6E5–82587–00	13 – 32
6E9–82588–00	12 – 11
688–8258A–20	33 – 54
64J–82590–20	13 – 13
64J–82590–50	13 – 13
703–82591–00	33 – 59

PART NO. CODIGO Nº	REF. NO.
703–82592–00	33 – 60
688–82594–00	13 – 16
703–83383–11	33 – 56
6Y5–83504–22	14 – 3
6Y5–8350T–E0	34 – 1
64J–83519–00	14 – 6
6Y5–83553–00	34 – 4
6K3–83557–00	14 – 10
6E5–83558–00	23 – 33
6E5–83558–10	28 – 18
6FM–83589–00	15 – 2
62Y–83614–00	13 – 33
62Y–83626–00	12 – 18
6Y5–83653–20	34 – 7
63D–83672–11	23 – 34
62Y–84301–00	15 – 1
6Y8–84383–00	34 – 3
6H4–85415–10	15 – 22
64J–85510–00	11 – 2
64J–85516–00	14 – 4
64J–85540–12	13 – 1
69W–85550–10	11 – 1
62Y–85561–00	11 – 3
62Y–85570–00	12 – 1
62Y–85580–00	11 – 5
62Y–85599–00	12 – 13
60A–W0001–00	35 – 1
61S–W0001–20	37 – 1
6H3–W0078–02	1 – 15
	37 – 22
6H3–W0078–1A	37 – 33
64J–W0084–01–8D	18 – 1
62Y–W0093–11	36 – 1
64J–W009A–04–9S	5 – 1
60A–W009B–03–9S	3 – 1
90101–06020	21 – 6
	21 – 8
	22 – 6
	22 – 8
	22 – 30
90101–06054	20 – 9
90101–06M27	18 – 49
90101–09M01	31 – 7
90101–12M06	18 – 21
90101–12M65	21 – 45
	22 – 40
90105–09009	5 – 15
90105–10M67	29 – 15

PART NO. CODIGO Nº	REF. NO.
90109–06M30	20 – 30
90109–06M64	9 – 12
90109–06M65	5 – 11
90109–06M80	17 – 23
90109–08229	23 – 26
90109–08M63	6 – 16
90109–12261	23 – 15
90116–08M14	12 – 15
90116–10062	23 – 7
90116–10063	23 – 7
90116–10M53	26 – 25
90119–06025	9 – 21
90119–06M61	17 – 6
90119–06MA3	5 – 16
90119–06MA5	3 – 25
90119–08102	26 – 16
90119–08132	26 – 17
90119–08154	3 – 4
90119–08M00	26 – 26
90119–08M14	28 – 35
	37 – 30
90119–08M33	28 – 34
	37 – 31
90119–08M76	16 – 20
90119–08M77	16 – 21
90119–08M84	29 – 7
90119–10068	29 – 6
90151–05M00	29 – 12
90152–05011	18 – 7
90152–06M01	21 – 31
90157–05M19	30 – 4
90159–05M13	14 – 9
90159–06M08	12 – 14
90170–09M03	31 – 5
90170–16M01	28 – 38
90170–20137	11 – 15
90171–16011	29 – 19
90175–06003	18 – 51
	19 – 5
90179–06066	23 – 21
90179–06M24	2 – 4
90179–35001	9 – 15
90183–02M03	28 – 49
90185–05002	29 – 13
90185–08018	23 – 28
90185–08057	19 – 8
90185–09M01	31 – 4
90185–10027	18 – 37

PART NO. CODIGO Nº	REF. NO.
90185–10027	23 – 8
90185–12058	18 – 27
90185–22M11	21 – 14
	22 – 14
90201–03313	28 – 47
90201–06015	26 – 8
90201–06M05	14 – 2
90201–08M04	21 – 42
	22 – 37
90201–10049	23 – 40
90201–10120	18 – 36
90201–10M02	18 – 8
90201–10M06	9 – 5
90201–10M20	20 – 13
	31 – 3
90201–10M63	31 – 8
90201–12062	21 – 46
	22 – 41
90201–12426	21 – 47
	22 – 42
90201–12537	18 – 25
90201–12M16	13 – 29
	23 – 12
90201–12M34	18 – 39
90201–13M19	23 – 14
90201–21M18	11 – 16
90201–22M03	21 – 13
	22 – 13
90201–25M05	28 – 65
90201–30M00	23 – 2
90202–07M07	20 – 17
90202–12060	29 – 3
90202–12092	18 – 24
90202–21100	23 – 13
90206–12054	18 – 26
90240–05M19	17 – 13
90249–05M30	17 – 11
90249–06M19	21 – 21
	22 – 21
90249–07M29	9 – 10
90250–07M02	28 – 50
90254–03003	18 – 13
90266–06M02	2 – 9
90280–03M03	28 – 25
	37 – 32
90280–04M06	9 – 16
	35 – 17
90282–04010	28 – 61

PART NO. CODIGO Nº	REF. NO.
90338–04M17	7 – 35
90338–05M03	17 – 28
	17 – 32
90340–08002	28 – 9
90340–14M06	3 – 7
	27 – 11
90344–51003	3 – 6
90386–05002	17 – 14
90386–06088	18 – 41
90386–08032	18 – 10
90386–10009	18 – 35
90386–10025	21 – 18
	22 – 18
90386–10M16	21 – 17
	22 – 17
90386–12089	18 – 23
90386–18M35	22 – 33
90386–18M92	22 – 32
90386–22M15	21 – 12
	22 – 12
90386–30M60	23 – 6
90386–30M77	23 – 4
90386–30M78	23 – 3
90386–90M90	20 – 12
90387–06119	13 – 28
90387–06M15	7 – 37
90387–06M43	17 – 25
90387–06M45	20 – 26
90387–06M69	17 – 5
90387–06M70	7 – 6
90387–10M42	31 – 6
90387–12M30	18 – 38
90387–16003	21 – 37
90387–16004	21 – 38
90387–18002	21 – 43
	22 – 38
90387–18003	21 – 44
	22 – 39
90389–25M00	29 – 18
90430–06014	5 – 10
	5 – 12
	35 – 6
90430–08003	1 – 13
	28 – 11
	37 – 10
90430–12072	29 – 4
90430–14115	3 – 8
	35 – 2

PART NO. CODIGO Nº	REF. NO.
90430–14M09	1 – 12
	27 – 12
	37 – 4
90445–07M31	28 – 17
90445–07M38	28 – 17
90445–07MF1	23 – 32
90445–09068	3 – 16
90445–09095	3 – 18
90445–09104	3 – 14
90445–10020	10 – 3
90445–10M48	10 – 14
90445–11M05	30 – 11
90445–11M06	30 – 9
90446–17M11	15 – 21
90446–17M91	23 – 38
90464–07M41	12 – 3
90464–09M43	17 – 31
90465–06M86	23 – 30
90465–06M90	12 – 2
90465–11M10	3 – 19
	7 – 21
	7 – 42
	23 – 31
	23 – 37
	28 – 19
90465–13M11	13 – 18
	13 – 21
90465–13M18	23 – 36
90465–13M24	13 – 17
	13 – 25
	14 – 11
90465–13M36	7 – 22
90465–13M39	18 – 55
90465–13M97	11 – 7
90467–08M18	3 – 15
90467–09M17	10 – 4
	10 – 15
90467–10M04	10 – 16
	10 – 31
90468–18008	20 – 15
	20 – 32
90480–12314	11 – 13
90480–13M24	17 – 24
90480–25161	12 – 4
90501–12082	20 – 10
90501–12M48	28 – 46
90501–14M08	23 – 20
90501–16M17	18 – 33

NUMERICAL INDEX
INDICE NUMERICO

PART NO. CODIGO Nº	REF. NO.
90501–23215	18 – 9
90502–16M02	21 – 28
	22 – 28
90506–14M24	21 – 22
	22 – 22
90508–20018	9 – 9
91318–03005	24 – 56
91318–03025	24 – 55
91318–05030	24 – 54
91318–05045	24 – 27
91380–05020	24 – 64
91490–16010	17 – 12
	17 – 15
	20 – 24
91490–20015	20 – 14
91490–25012	18 – 46
	18 – 47
91490–30025	29 – 20
91690–30012	21 – 27
	22 – 27
91690–30020	21 – 19
	22 – 19
92903–06100	15 – 18
92990–06100	15 – 15
92990–06600	18 – 44
	18 – 45
	18 – 50
92990–08100	12 – 17
92990–08600	19 – 7
	33 – 38
92990–10100	26 – 28
92990–12200	18 – 22
92995–06600	26 – 7
92995–08600	10 – 12
	19 – 10
92995–10600	26 – 29
93101–23070	28 – 28
	37 – 14
93101–25M03	28 – 60
	37 – 19
93101–35002	4 – 2
	35 – 11
93102–37M40	9 – 1
	35 – 16
93102–43M42	4 – 1
	35 – 10
93103–18011	26 – 2
	37 – 5

PART NO. CODIGO Nº	REF. NO.
93106–09014	28 – 14
	37 – 12
93210–04N51	24 – 46
93210–064A5	24 – 41
93210–07003	28 – 52
	37 – 21
93210–08287	30 – 14
	30 – 16
93210–09165	24 – 60
93210–12MG9	9 – 19
	35 – 19
93210–13M63	5 – 8
93210–14515	9 – 20
	35 – 20
93210–16275	31 – 10
93210–24M79	5 – 26
	10 – 28
	35 – 9
	35 – 21
93210–29M94	23 – 5
93210–30MH4	7 – 16
	35 – 14
	36 – 13
93210–32738	1 – 8
	10 – 8
93210–33MH2	9 – 18
	35 – 18
93210–35M86	7 – 17
	7 – 36
	35 – 12
	35 – 15
	36 – 14
93210–38MH3	7 – 24
	35 – 13
93210–44006	24 – 10
93210–46044	28 – 29
	37 – 15
	37 – 29
93210–49001	24 – 6
93210–49046	28 – 13
	37 – 11
93210–64488	24 – 63
93210–86M39	28 – 58
	37 – 18
93306–207U0	28 – 56
93315–52563	28 – 3
93317–322V0	28 – 40
93317–325U0	28 – 59

PART NO. CODIGO Nº	REF. NO.
93332–00095	28 – 8
93332–000U3	28 – 6
93410–16097	21 – 39
93410–18M05	22 – 34
93410–28M06	23 – 10
93420–36M01	26 – 22
93430–06024	33 – 12
93450–09M01	5 – 4
93450–17129	4 – 11
93450–40165	28 – 27
93501–04M02	20 – 11
93501–08001	24 – 43
93503–16003	24 – 14
	28 – 48
93505–32038	24 – 38
93515–32M01	18 – 34
93604–10M03	28 – 33
93604–26256	24 – 53
93605–14143	9 – 4
93606–12019	3 – 3
	26 – 24
	27 – 9
	29 – 5
93608–12M05	27 – 6
93608–16M16	7 – 40
93700–06M03	18 – 17
	21 – 10
	22 – 10
94701–00375	1 – 6
	5 – 27
95023–06025	11 – 4
95380–05600	10 – 25
	33 – 9
95380–05700	20 – 21
95380–06600	17 – 21
	33 – 43
95380–08600	10 – 13
	12 – 16
95380–10600	26 – 27
95380–12600	21 – 48
	22 – 43
95380–12800	23 – 17
95780–05300	2 – 7
95895–06025	13 – 30
95895–06035	20 – 27
95895–08020	9 – 11
95895–10040	9 – 6
97013–06020	15 – 17

PART NO. CODIGO Nº	REF. NO.
97075–06050	26 – 6
97080–06035	19 – 4
97080–08016	21 – 41
	22 – 36
97095–06010	5 – 9
	21 – 23
	21 – 35
	22 – 23
97095–06012	13 – 34
97095–08014	10 – 11
97095–08030	19 – 9
97380–05025	33 – 10
97380–08030	33 – 37
97513–06516	18 – 30
	18 – 53
	27 – 5
97513–06520	26 – 36
97513–06525	27 – 3
97513–06530	15 – 16
97513–06535	3 – 5
97575–06525	26 – 10
	27 – 13
97575–08525	23 – 19
97575–08530	23 – 29
97595–05512	3 – 30
	26 – 35
97595–05516	2 – 6
97595–06512	12 – 12
	13 – 9
	14 – 8
97595–06514	13 – 6
97595–06516	7 – 45
	28 – 15
97595–06520	3 – 31
	5 – 22
	5 – 24
	13 – 20
	17 – 19
	20 – 3
97595–06525	7 – 39
	10 – 2
	13 – 8
	20 – 4
97595–06530	7 – 38
	10 – 30
	12 – 5
97595–06540	14 – 1
97595–06590	7 – 5

PART NO. CODIGO Nº	REF. NO.
97595–06620	13 – 2
97595–08516	16 – 19
97595–08535	12 – 8
97602–04316	25 – 9
97607–04210	5 – 20
97880–06025	15 – 14
97885–05012	18 – 19
97885–06008	18 – 18
	21 – 4
	22 – 4
97885–06016	23 – 23
97885–06030	15 – 19
97890–04007	8 – 33
97980–05216	26 – 19
97980–05312	11 – 6
97980–06214	15 – 3
97980–06225	11 – 8
97980–06325	17 – 22
	17 – 30
97985–06216	23 – 35
98580–04006	33 – 40
98980–04006	8 – 27
98980–05025	5 – 6
99001–08600	28 – 53
99002–03600	24 – 34
99009–32500	24 – 21
99530–08012	5 – 14
	11 – 9
9E450–04533	34 – 2

PART NO. CODIGO Nº	REF. NO.