YAMAHA

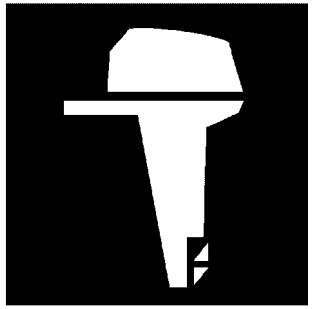

PARTS CATALOGUE
CATALOGO DE REPUESTOS

F115B'17 (6EK4)
FL115B'17 (6EL4)

1R6EK-200SA

( )

YAMAHA GENUINE Parts & Accessories

2018/8/24

NEWS NO.	DATE	COMMENT
PE0-OM-170026	Jul.,27,2017	COR:F(L)115B(6EK4/6EL4) PTT ASSY 1 LIST/ILLUSTRATION CORRECTION
PE0-OM-180002	Jan.,30,2018	MOD:F(L)115B(6EK4/6EL4) FIG.8,10 LIST/ILLUSTRATION REVISION
PE0-OM-180008	Feb.,19,2018	MOD:FIG.42, 43 LIST REVISION
PE0-OM-180017	Aug.,9,2018	MOD:FIG.35 LOWER CASING & DRIVE 2 LIST/ILLUSTRATION REVISION

F115B/FL115B
PARTS CATALOGUE
©2017 by Yamaha Motor Co., Ltd.
1st edition, June 2017
All rights reserved.
Any reprinting or unauthorized use
without the written permission of
Yamaha Motor Co., Ltd.
is expressly prohibited.
Printed in Japan.

F115B/FL115B
CATALOGO DE REPUESTOS
©2017 por Yamaha Motor Co., Ltd.
1ª edición, junio 2017
Todos los derechos reservados.
Toda reproducción o uso no autorizado
sin el consentimiento escrito de
Yamaha Motor Co., Ltd.
quedan expresamente prohibidos
Impreso en Japón.

FOREWORD

This Parts Catalogue is related to the parts for the model(s) on the cover page. When you are ordering replacement parts, please refer to this Parts Catalogue and quote both part numbers and part names correctly.

1. Modifications or additions which have been made after the issue of the Parts Catalogue will be announced in the Parts News.
   It is advisable that you make the necessary corrections to the Parts Catalogue according to the Parts News.

2. Abbreviations
   The following abbreviations are used in this Parts Catalogue.
   "UR" Use specified parts number.
   "UN" Use as many as needed.
   "AP" Alternate Parts
   "LM" Locally Made (Parts need to be ordered locally)
   "F#" Frame No. (Applicable machine No.)
   "O/S" Over Size

3. The number of components for assembly
   - Parts, which are to be supplied in an assembly, are listed with a dot (.) in front of the part name as shown below.
   - The numeral appearing to the right of each component part indicates the quantity of parts for each assembly unit.

PART NO.	DESCRIPTION	Q'TY	REMARKS
2F5–83310–60	FRONT FLASHER LIGHT ASSY	2	
115–83311–60	.BULB (6V–18W)	1	

4. Applicable colours of graphics are represented in the "REMARKS" as shown below.

PART NO.	DESCRIPTION	Q'TY	REMARKS
2N4–24110–00–X5	FUEL TANK COMP.	2	MXR
3J1–24240–10	.GRAPHIC, FUEL TANK	1	FOR MXR

5. Note that the illustrations for reference in finding parts numbers are not to be used for assembling. When assembling, please use the applicable service manual.

6. The asterisk (*) before a reference number indicates modified items after the first edition.

7. Applicable Serial No.
   Engine Serial No.

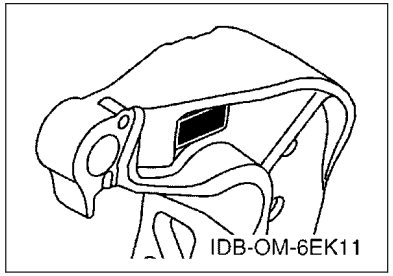

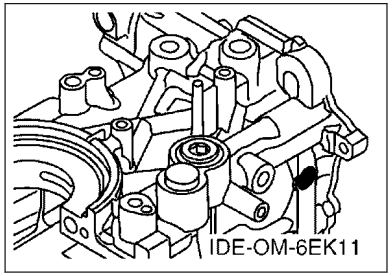

8. Applicable Engine Starting Serial No.

Model	Serial No.	Model	Serial No.
F115B	6EK-1040464	FL115B	6EL-1000910

9. Applicable Colour Code

Abbreviation	Colour Name	Colour Code
DBN1	DARK BLUISH GRAY 1	008D

10. Quantity Column Information

Column No.	Name Of Q'ty Column	Applicable Model
1	ET	F115BET
2	EHT	F115BEHT
3	6EL4	FL115BET

PROLOGO

Este catálogo de repuestos corresponde a las piezas para el o los modelos que figuran en la página de portada. Al formular el pedido de repuestos, se ruega citar este catálogo y especificar correctamente el número y el nombre de las piezas.

1. Las modificaciones y agregados que se hayan realizado después de la edición de este Catálogo de Repuestos, serán anunciados en las Informaciones de Recambios.
   Es recomendable que se hagan las correcciones necesarias en el Catálogo de Repuestos de acuerdo con las Informaciones de Recambios.

2. Abreviaciones
   En este. Catálogo de Repuestos se emplean las siguientes abreviaciones.
   "UR" Usar el número de partes especificado
   "UN" Usar la cantidad necesaria
   "AP" Piezas sustitutivas
   "LM" Fabricación local (Hay que pedir los repuestos en las cercanías)
   "F#" Nº de bastidor (Nº aplicable a la máquina)
   "O/S" Sobredimensionado

3. La cantidad de componentes para el montaje
   - Los componentes, suministrados como conjunto, se describen con un punto (.) que precede al nombre del parte como se indica a continuación.
   - La numeración que aparece a la derecha de cada descripción indica la cantidad de partes por cada unidad de conjunto.

CODIGO Nº	DESCRIPCION	CANT.	OBSERVACIONES
2F5–83310–60	ENSAMBLAJE DE LA LUZ	2	
115–83311–60	.BOMBILLA (6V–18W)	1	

4. Los colores de los componentes se indican como sigue en la columna de "OBSERVACIONES".

CODIGO Nº	DESCRIPCION	CANT.	OBSERVACIONES
2N4–24110–00–X5	COMP. DEL TANQUE	2	MXR
3J1–24240–10	.GRAFICO, DEL TANQUE	1	PARA MXR

5. Debe tenerse en cuenta que las ilustraciones sirven como guia para la búsqueda de los números de partes y no deben usarse para el montaje. Durante el montaje, se recomienda usar el manual de taller correspondiente.

6. EL asterisco (*) antes del número de referencia indica los elementos modificados después de la primera edición.

7. Números de serie
   Nº de Serie del motor

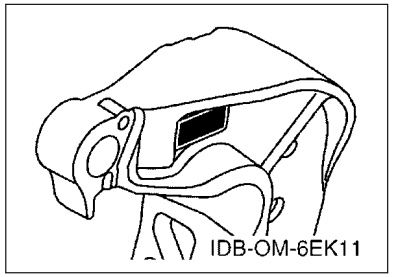

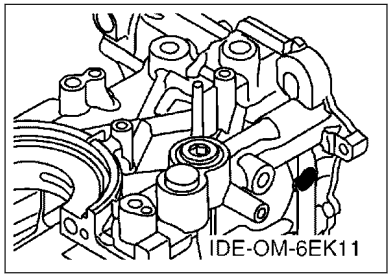

8. Números de serie del motor

Modelo	Nº de serie	Modelo	Nº de serie
F115B	6EK-1040464	FL115B	6EL-1000910

9. Códigos de color aplicables

Abreviatura	Nombre de color	Código de color
DBN1	DARK BLUISH GRAY 1	008D

10. Informacion para la columna de cantidades

Columna Nº	Nombre de la columna de cantidades	Modelo aplicable
1	ET	F115BET
2	EHT	F115BEHT
3	6EL4	FL115BET

CONTENTS

SCHEDULED SERVICE PARTS....1
TOP COWLING....2
CYLINDER & CRANKCASE 1....3
CRANKSHAFT & PISTON....5
CYLINDER & CRANKCASE 2....7
VALVE....9
INTAKE 1....11
INTAKE 2....13
INTAKE 3....14
FUEL INJECTION PUMP 1....15
FUEL INJECTION PUMP 2....17
EXHAUST....18
FUEL 1....19
FUEL 2....21
GENERATOR....22
ELECTRICAL 1....23
ELECTRICAL 2....24
ELECTRICAL 3....26
ELECTRICAL 4....27
ELECTRICAL 5....28
STARTING MOTOR....29
BOTTOM COWLING 1....30
BOTTOM COWLING 2....32
STEERING 1....33
STEERING 2....36
STEERING FRICTION....37
CONTROL....38
BRACKET 1....40
BRACKET 2....42
POWER TRIM & TILT ASSY 1....44
POWER TRIM & TILT ASSY 2....47
UPPER CASING....48
OIL PAN....50
LOWER CASING & DRIVE 1....51
LOWER CASING & DRIVE 2....55
LOWER CASING & DRIVE 3....57
LOWER CASING & DRIVE 4....61
STEERING GUIDE....62
REMOTE CONTROL BOX....63
REMOTE CONTROL ASSY 1....64
REMOTE CONTROL ASSY 2....67
REMOTE CONTROL ASSY 3....70
REMOTE CONTROL ASSY 4....73
METER 1....76
METER 2....77
SWITCH & PANEL 1....78
SWITCH & PANEL 2....79
OPTIONAL PARTS 1....80
OPTIONAL PARTS 2....83
OPTIONAL PARTS 3....84
OPTIONAL PARTS 4....85
OPTIONAL PARTS 5....86
OPTIONAL PARTS 6....87
OPTIONAL PARTS 7....88
OPTIONAL PARTS 8....89
OPTIONAL PARTS 9....90
REPAIR KIT 1....91
REPAIR KIT 2....92

INDEX

NUMERICAL INDEX....94

CONTENIDO

PARTES DE REPUESTO TEMPORALES..... 1
SOPORTE SUPERIOR..... 2
CILINDRO & CARTER 1..... 3
CIGUENAL & PISTON.....5
CILINDRO & CARTER 2..... 7
VALVULA.....9
ADMISION 1..... 11
ADMISION 2..... 13
ADMISION 3..... 14
BOMBA DE INYECTOR 1..... 15
BOMBA DE INYECTOR 2..... 17
DESCARGA.....18
COMBUSTIBLE 1..... 19
COMBUSTIBLE 2..... 21
GENERADOR.....22
EQUIPO ELECTRICO 1..... 23
EQUIPO ELECTRICO 2..... 24
EQUIPO ELECTRICO 3..... 26
EQUIPO ELECTRICO 4..... 27
EQUIPO ELECTRICO 5..... 28
MOTOR DE ARRANQUE..... 29
CUBIERTA INFERIOR 1..... 30
CUBIERTA INFERIOR 2..... 32
DIRECCION 1.....33
DIRECCION 2.....36
FRICCION DE DIRECCION..... 37
CONTROL..... 38
SOPORTE 1..... 40
SOPORTE 2..... 42
COMPONER Y PODER VARILLA 1.....44
COMPONER Y PODER VARILLA 2.....47
FUNDA SUPERIOR.....48
OIL PAN.....50
IMPULSOR E INFERIOR 1..... 51
IMPULSOR E INFERIOR 2..... 55
IMPULSOR E INFERIOR 3..... 57
IMPULSOR E INFERIOR 4..... 61
DIRECCIONGUIAR..... 62
CONTROL REMOTO COMPLETO..... 63
CONTROL REMOTO COMPL 1.....64
CONTROL REMOTO COMPL 2.....67
CONTROL REMOTO COMPL 3.....70
CONTROL REMOTO COMPL 4.....73
MEDIDOR 1.....76
MEDIDOR 2.....77
PANEL DE INTERRUPTOR 1..... 78
PANEL DE INTERRUPTOR 2..... 79
PARTES OPCIONALES 1..... 80
PARTES OPCIONALES 2..... 83
PARTES OPCIONALES 3..... 84
PARTES OPCIONALES 4..... 85
PARTES OPCIONLES 5..... 86
PARTES OPCIONALES 6..... 87
PARTES OPCIONALES 7..... 88
PARTES OPCIONALES 8..... 89
PARTES OPCIONALES 9..... 90
ESTUCHE REPARATION 1..... 91
ESTUCHE REPARATION 2..... 92

INDICE

INDICE NUMERICO..... 94

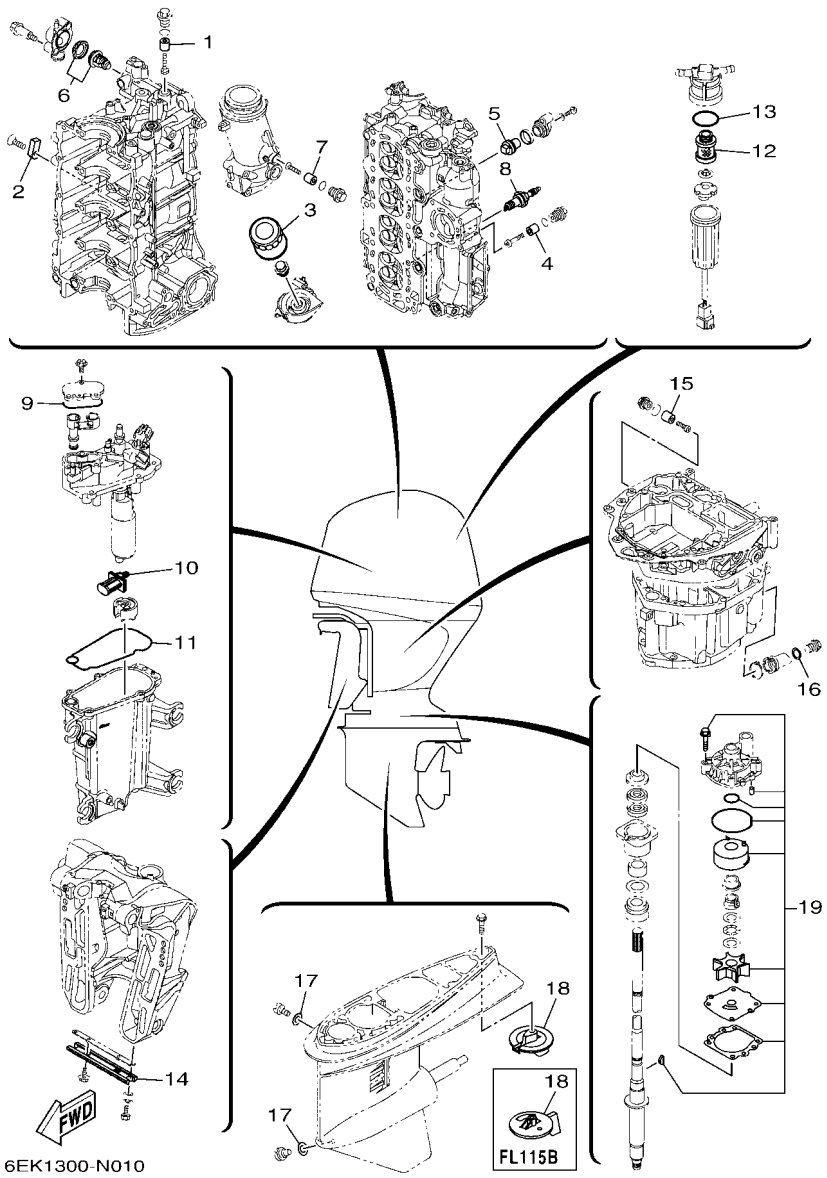

FIG. 1 SCHEDULED SERVICE PARTS — PARTES DE REPUESTO TEMPORALES

REF. NO.	PART NO. CODIGO Nº	DESCRIPTION DESCRIPCION	ET	EHT	6EL4			REMARKS OBSERVACIONES
1	6G8–11325–00	ANODE ANODO	1	1	1			
2	63P–11325–01	ANODE ANODO	1	1	1			
3	5GH–13440–70	ELEMENT ASSY, OIL CLEANER ELEMENTO FILTRO DE ACEITE	1	1	1			
4	6G8–11325–00	ANODE ANODO	1	1	1			
5	67F–11325–01	ANODE ANODO	1	1	1			
6	6EK–12411–00	THERMOSTAT TERMOSTAT	1	1	1			
7	6EK–11325–00	ANODE ANODO	1	1	1			
8	94702–00437	PLUG, SPARK (NGK LKR6E) BUJIA (NGK LKR6E)	4	4	4			
9	6CB–13016–00	O-RING ANILLO O	1	1	1			
10	63P–13915–00	FILTER FILTRO	1	1	1			
11	6CB–14984–00	GASKET, FLOAT CHAMBER EMPAQUE CAMARA DE BOIA	1	1	1			
12	6D8–24563–00	ELEMENT, FILTER ELEMENTO DEL FILTRO	1	1	1			
13	6D8–24564–00	GASKET EMPAQUE	1	1	1			
14	6H1–45251–03	ANODE CATODE	1	1	1			
15	6G8–11325–00	ANODE ANODO	1	1	1			
16	90430–14M09	GASKET JUNTA	1	1	1			
17	90430–08003	GASKET JUNTA	2	2	2			
18	6E5–45371–01	TAB-TRIM QUILLA ESTABILIZADOR	1	1				
	6L6–45371–00	TAB-TRIM QUILLA ESTABILIZADOR			1			
19	68V–W0078–00	WATER PUMP REPAIR KIT ESTUCHE REPARACION BOMBA AGUA	1	1	1			

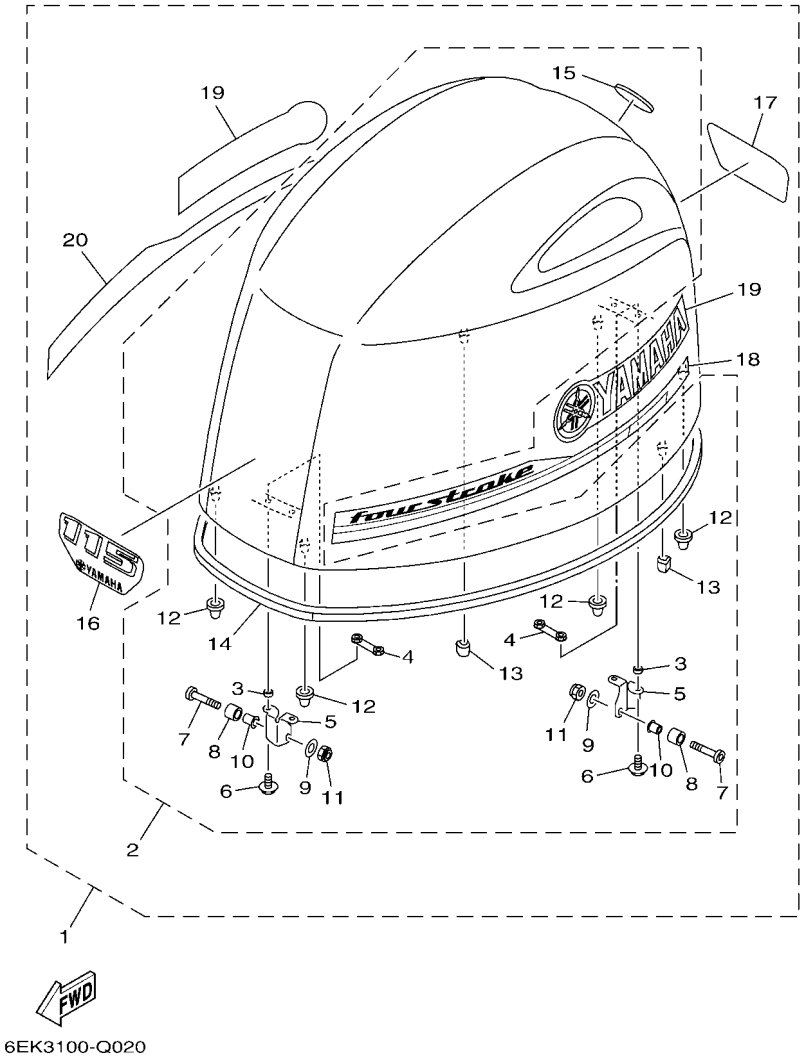

6EK3100-Q020

FIG. 2 TOP COWLING — SOPORTE SUPERIOR

REF. NO.	PART NO. CODIGO Nº	DESCRIPTION DESCRIPCION	ET	EHT	6EL4			REMARKS OBSERVACIONES
1	6EK–42610–00	TOP COWLING ASSY SOPORTE SUPERIOR COMPL.	1	1	1			
2	6EK–4261A–00	.TOP COWLING W/O GRAPHICS .SOPORTE SUPERIOR SIN GRAFICOS	1	1	1			
3	90387–07046	..COLLAR ..ESPACIADOR	4	4	4			
4	6EK–42646–00	..PLATE, CLAMP ..PLACA GRAMPA	2	2	2			
5	6EK–42647–00	..HOLDER, CLAMP BAND ..MORDAZA DE ABRAZADERA	2	2	2			
6	90105–06039	..BOLT, FLANGE ..TORNILLO	4	4	4			
7	90111–08078	..BOLT,HEX. SOCKET BUTTON ..TORNILLO	2	2	2			
8	90387–10094	..COLLAR ..ESPACIADOR	2	2	2			
9	92990–08600	..WASHER, PLATE ..ARANDELA PLANA	2	2	2			
10	90387–08M45	..COLLAR ..ESPACIADOR	2	2	2			
11	95780–08300	..NUT, FLANGE ..TUERCA	2	2	2			
12	68F–42663–00	..DAMPER 2 ..AMORTIGUADOR 2	4	4	4			
13	6EK–42662–00	..DAMPER ..AMORTIGUADOR	2	2	2			
14	6EK–42615–01	..SEAL ..SELLO	1	1	1			
15	6DA–42697–00	..TUNING FORK MARK ..MARCA, YAMAHA	1	1	1			
16	68V–42677–30	.GRAPHIC, FRONT .CALCAMONIA FRONTAL	1	1	1			
17	68V–42678–41	.GRAPHIC, REAR .CALCAMONIA TRASERA	1	1	1			
18	6EK–42675–00	.GRAPHIC, SIDE 1 .CALCAMONIA LATERAL 1	1	1	1			
19	6D6–42681–00	.MARK, COWLING .MARCA DE CUBIERTA	2	2	2			
20	6EK–42676–00	.GRAPHIC, SIDE 2 .CALCAMONIA LATERAL 2	1	1	1			

FIG. 3 CYLINDER & CRANKCASE 1 — CILINDRO & CARTER 1

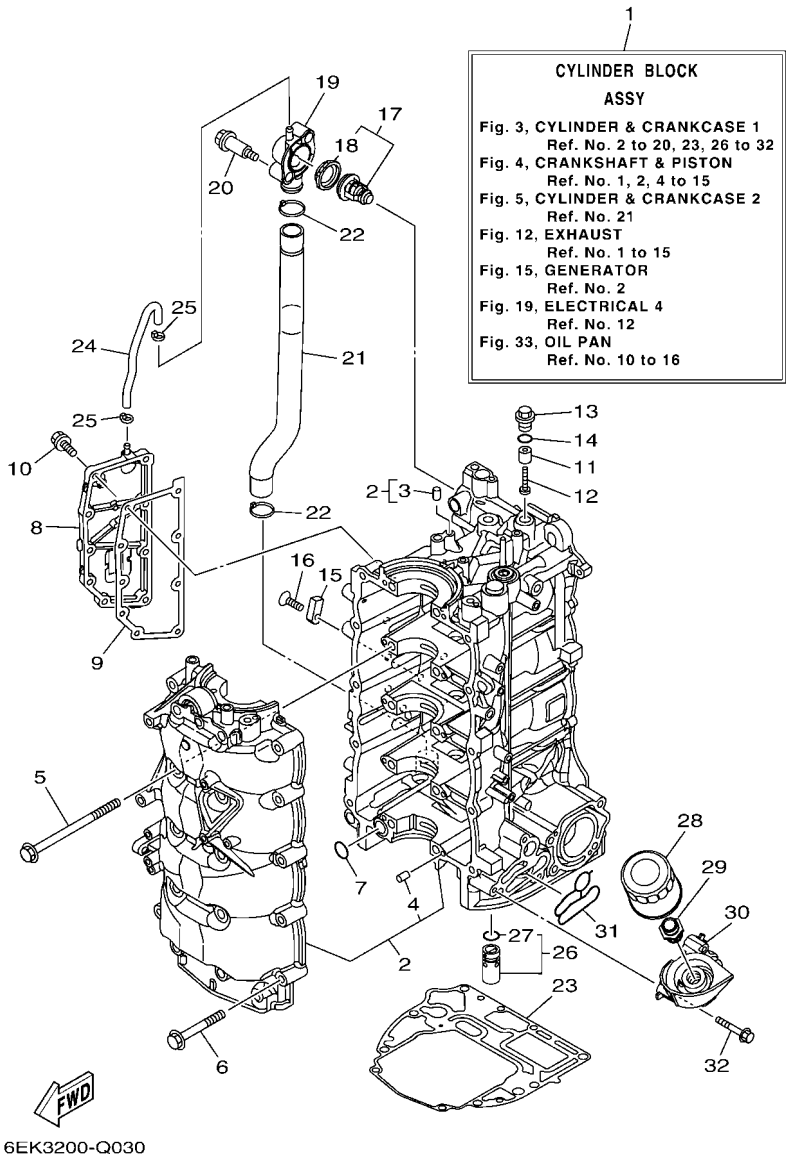

REF. NO.	PART NO. CODIGO Nº	DESCRIPTION DESCRIPCION	ET	EHT	6EL4			REMARKS OBSERVACIONES
1	6EK–W009B–02–9S	CYLINDER BLOCK ASSY CYLINDRO BLOQUE COMPLETO	1	1	1			
2	6EK–15109–01–9S	CRANKCASE ASSY CARTER COMPLETO	1	1	1			
3	93606–19M23	.PIN, DOWEL .PASADOR DE CLAVIJA	1	1	1			
4	93606–12019	.PIN, DOWEL .PASADOR DE CLAVIJA	10	10	10			
5	90119–10057	BOLT, WITH WASHER TORNILLO CON ARANDELA	10	10	10			
6	90105–08170	BOLT, FLANGE TORNILLO	10	10	10			
7	93210–19MJ1	O-RING ANILLO O	1	1	1			
8	6EK–15414–00–9S	COVER, 1 CUBIERTA 1	1	1	1			
9	6EK–15353–00	GASKET, DRAIN JUNTA DE DRENAJE	1	1	1			
10	90105–06037	BOLT, FLANGE TORNILLO	9	9	9			
11	6G8–11325–00	ANODE ANODO	1	1	1			
12	98980–05025	SCREW, BIND TORNILLO DE LIGAR	1	1	1			
13	6G8–11197–A0	PLUG, BLIND TAPON CIEGO	1	1	1			
14	93210–13M63	O-RING ANILLO O	1	1	1			
15	63P–11325–01	ANODE ANODO	1	1	1			
16	90151–06M02	SCREW, COUNTERSUNK TORNILLO EMBUTIDO	1	1	1			
17	6EK–12411–00	THERMOSTAT TERMOSTAT	1	1	1			
18	6EK–12412–00	.SEAL, THERMOSTAT .SELLO TERMOSTATO	1	1	1			
19	6EK–12413–00	COVER, THERMOSTAT CUBIERTA TERMOSTATO	1	1	1			
20	90109–06286	BOLT PERNO	2	2	2			
21	6EK–1243A–00	HOSE 1 TUBO 1	1	1	1			
22	90465–11M59	CLAMP BRIDA	2	2	2			
23	6EK–11351–00	GASKET, CYLINDER JUNTA, DE CILINDRO	1	1	1			
24	6EK–12483–00	PIPE 3 TUBO 3	1	1	1			
25	90465–11M10	CLAMP BRIDA	2	2	2			
26	6EK–13490–00	RELIEF VALVE ASSY VALVELA DE DESCOMPRESION	1	1	1			
27	6CB–13473–00	.O-RING .ANILLO O	1	1	1			

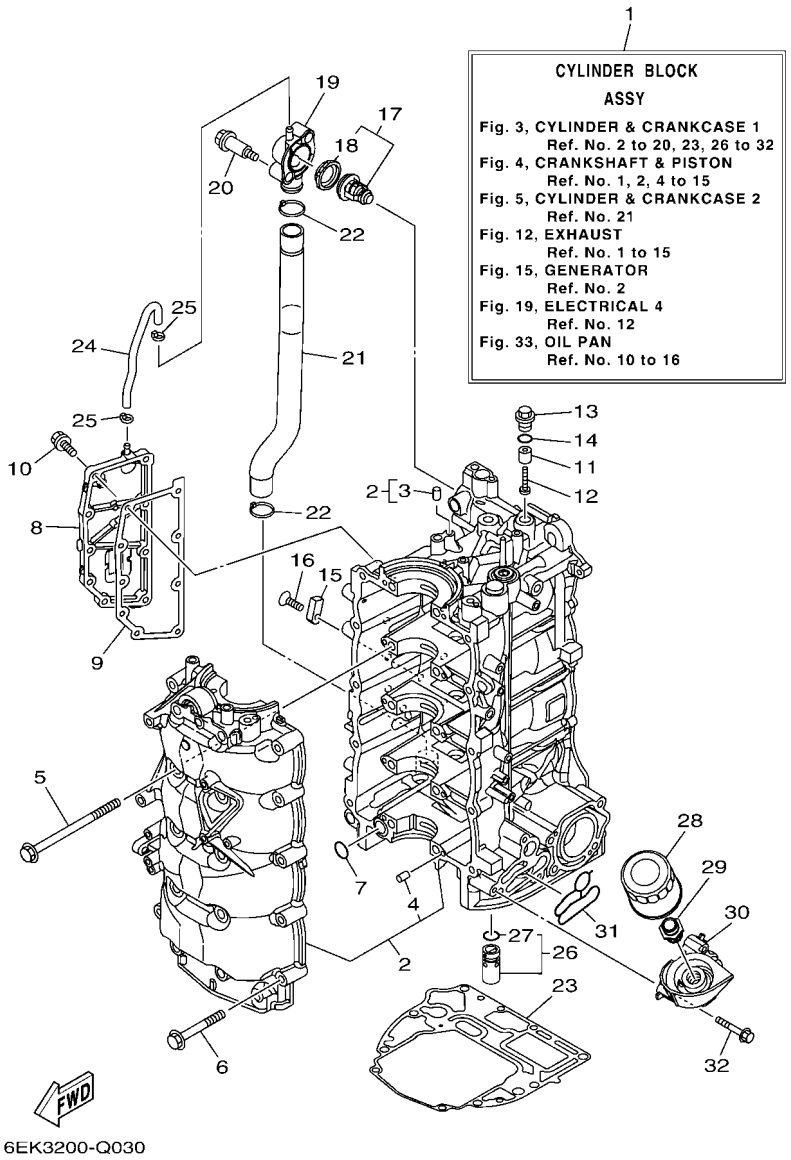

FIG. 3 CYLINDER & CRANKCASE 1 — CILINDRO & CARTER 1

REF. NO.	PART NO. CODIGO Nº	DESCRIPTION DESCRIPCION	ET	EHT	6EL4			REMARKS OBSERVACIONES
28	5GH–13440–70	ELEMENT ASSY, OIL CLEANER ELEMENTO FILTRO DE ACEITE	1	1	1			
29	90401–20007	BOLT, UNION PERNO DE UNION	1	1	1			
30	6EK–13446–00	CONNECTOR CONECTOR	1	1	1			
31	6EK–13475–00	GASKET EMPAQUE	1	1	1			
32	90105–06151	BOLT, FLANGE TORNILLO	3	3	3			

FIG. 4 CRANKSHAFT & PISTON — CIGUENAL & PISTON

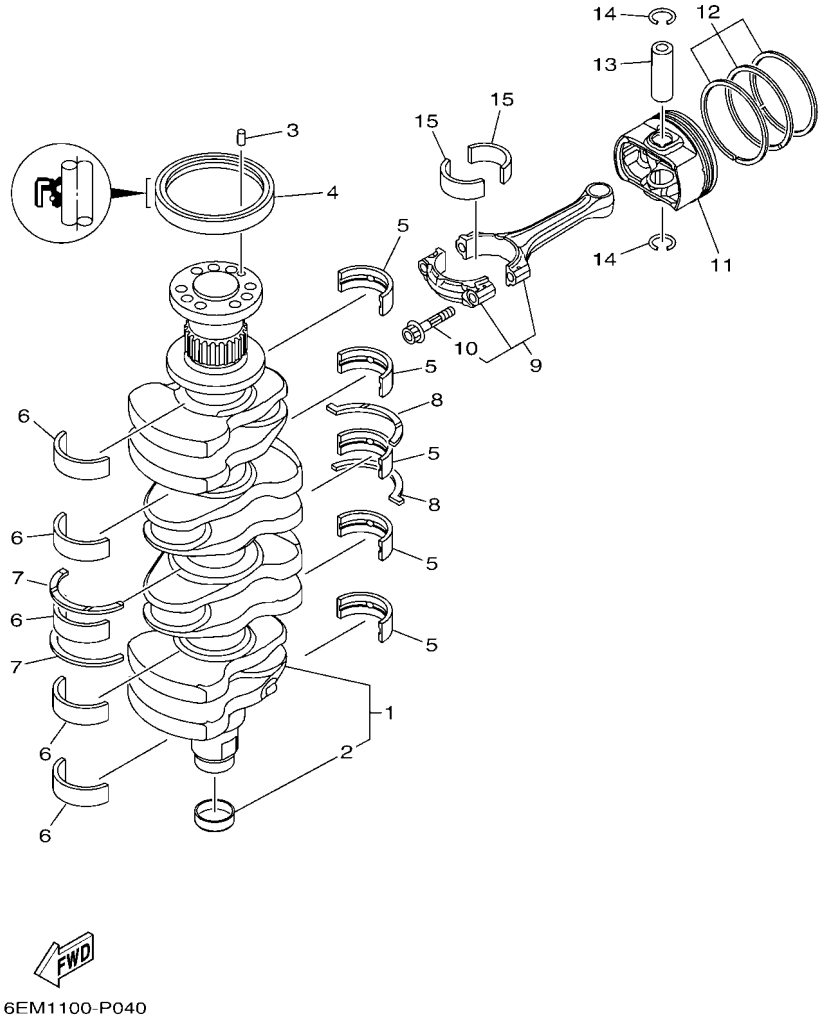

REF. NO.	PART NO. CODIGO Nº	DESCRIPTION DESCRIPCION	ET	EHT	6EL4			REMARKS OBSERVACIONES
1	6EK–11410–01	CRANKSHAFT CIGUENAL	1	1	1			
2	6CB–11478–00	.COLLAR .COLLAR	1	1	1			
3	93606–12019	PIN, DOWEL PASADOR DE CLAVIJA	1	1	1			
4	93102–85008	OIL SEAL SELLO ACEITE	1	1	1			
5	6EK–11416–00	PLANE BEARING, CRANKSHAFT 1 COJINETE PLANO 1	5	5	5			UR YELLOW UR YELLOW
	6EK–11416–10	PLANE BEARING, CRANKSHAFT 1 COJINETE PLANO 1	5	5	5			UR GREEN UR GREEN
	6EK–11416–20	PLANE BEARING, CRANKSHAFT 1 COJINETE PLANO 1	5	5	5			UR BLUE UR BLUE
	6EK–11416–30	PLANE BEARING, CRANKSHAFT 1 COJINETE PLANO 1	5	5	5			UR RED UR RED
	6EK–11416–40	PLANE BEARING, CRANKSHAFT 1 COJINETE PLANO 1	5	5	5			UR BLACK UR BLACK
6	6EK–11417–00	PLANE BEARING, CRANKSHAFT 2 COJINETE PLANO 2	5	5	5			UR YELLOW UR YELLOW
	6EK–11417–10	PLANE BEARING, CRANKSHAFT 2 COJINETE PLANO 2	5	5	5			UR GREEN UR GREEN
	6EK–11417–20	PLANE BEARING, CRANKSHAFT 2 COJINETE PLANO 2	5	5	5			UR BLUE UR BLUE
	6EK–11417–30	PLANE BEARING, CRANKSHAFT 2 COJINETE PLANO 2	5	5	5			UR RED UR RED
	6EK–11417–40	PLANE BEARING, CRANKSHAFT 2 COJINETE PLANO 2	5	5	5			UR BLACK UR BLACK
7	6EK–11426–01	BEARING, THRUST 1 COJINETE DE EMPUJE 1	2	2	2			
8	6EK–11427–00	BEARING, THRUST 2 COJINETE DE EMPUJE 2	2	2	2			
9	6EK–W1165–00	CONNECTING ROD ASSY BIELA COMPLETA	4	4	4			
10	K1C–A3275–00	.BOLT, CONNECTING ROD .TORNILLO DE BIELA	2	2	2			
11	6EK–11631–00–93	PISTON (STD) PISTON (NORMA)	4	4	4			
	6EK–11635–00	PISTON (0.25MM O/S) PISTON (0.25MM O/S)	4	4	4			AP AP
12	6EK–11603–00	PISTON RING SET (STD) JUEGO DE ANILLOS (NORMA)	4	4	4			
	6EK–11604–00	PISTON RING SET (0.25MM O/S) JUEGO DE ANILLOS (0.25MM O/S)	4	4	4			AP AP
13	6EK–11633–00	PIN, PISTON PASADOR, PISTON	4	4	4			
14	93450–19052	CIRCLIP SEGURO	8	8	8			
15	6EK–11656–00	PLANE BEARING, CONNECTING ROD COJINETE PLANO	8	8	8			UR YELLOW UR YELLOW
	6EK–11656–10	PLANE BEARING, CONNECTING ROD COJINETE PLANO	8	8	8			UR GREEN UR GREEN
	6EK–11656–20	PLANE BEARING, CONNECTING ROD COJINETE PLANO	8	8	8			UR BLUE UR BLUE

FIG. 4 CRANKSHAFT & PISTON — CIGUENAL & PISTON

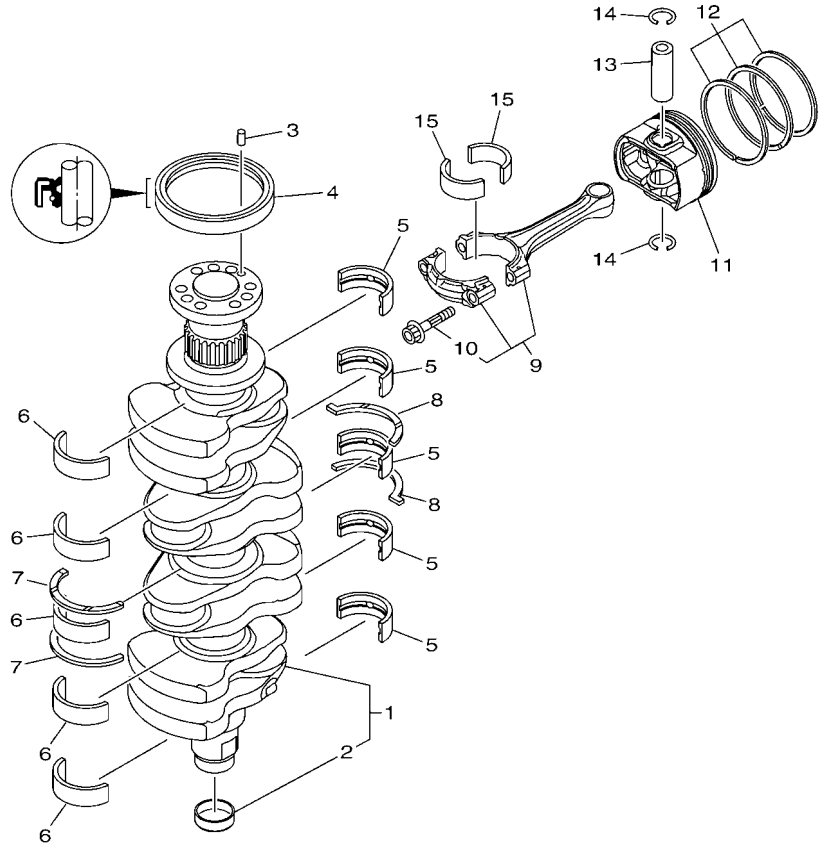

6EM1100-P040

REF. NO.	PART NO. CODIGO Nº	DESCRIPTION DESCRIPCION	ET	EHT	6EL4			REMARKS OBSERVACIONES
15	6EK–11656–30	PLANE BEARING, CONNECTING ROD COJINETE PLANO	8	8	8			UR RED UR RED
	6EK–11656–40	PLANE BEARING, CONNECTING ROD COJINETE PLANO	8	8	8			UR BLACK UR BLACK

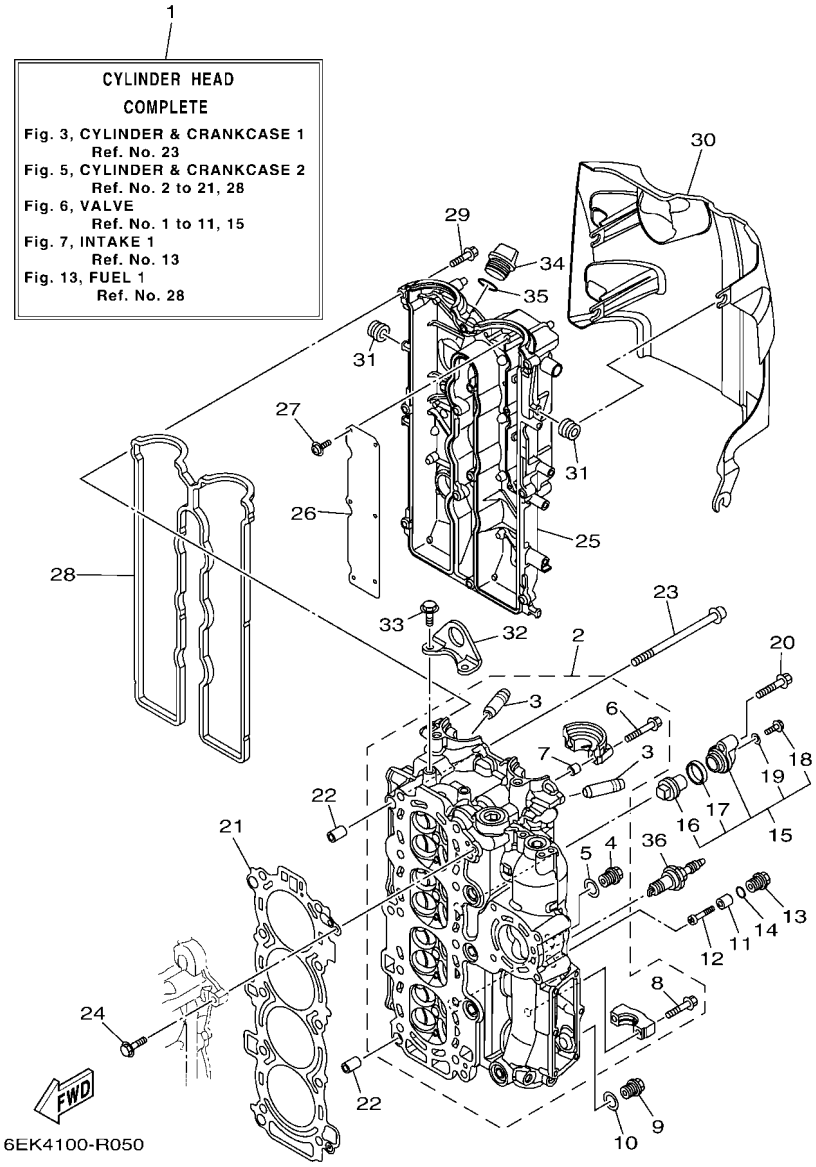

FIG. 5 CYLINDER & CRANKCASE 2 — CILINDRO & CARTER 2

REF. NO.	PART NO. CODIGO Nº	DESCRIPTION DESCRIPCION	ET	EHT	6EL4			REMARKS OBSERVACIONES
1	6EK–W009A–00–9S	CYLINDER HEAD COMPLETE CILINDRD CULATA COMPLETO	1	1	1			
2	6EK–11110–00–9S	CYLINDER HEAD ASSY CULATA DE CILINDRO COMPLETA	1	1	1			
3	6DA–11133–10	.GUIDE, VALVE 1 .GUIA DE VALVULA 1	16	16	16			
4	90340–18M09	.PLUG, STRAIGHT SCREW .TORNILLO, DE DRENAJE	1	1	1			
5	90201–186F1	.WASHER, PLATE .ARANDELA PLANA	1	1	1			
6	90119–07235	.BOLT/WASHER-CAM CAPS .TORNILLO CON ARANDELA	4	4	4			
7	91809–08006	.PIN, DOWEL .PASADOR DE CLAVIJA	4	4	4			
8	90119–07234	.BOLT, WITH WASHER .TORNILLO CON ARANDELA	16	16	16			
9	90340–14M06	PLUG, STRAIGHT SCREW TORNILLO, DE DRENAJE	1	1	1			
10	90430–14115	GASKET JUNTA	1	1	1			
11	6G8–11325–00	ANODE ANODO	1	1	1			
12	98980–05025	SCREW, BIND TORNILLO DE LIGAR	1	1	1			
13	6G8–11197–A0	PLUG, BLIND TAPON CIEGO	1	1	1			
14	93210–13M63	O-RING ANILLO O	1	1	1			
15	69J–11301–00	ANODE COVER ASSY CONJUNTO CUBIERTA DE ANODO	1	1	1			
16	67F–11325–01	.ANODE .ANODO	1	1	1			
17	67F–11328–00	.GROMMET, ANODE .TAPON	1	1	1			
18	90105–06M07	.BOLT, FLANGE .TORNILLO	1	1	1			
19	90430–06M03	.GASKET .JUNTA	1	1	1			
20	95875–08040	BOLT, FLANGE TORNILLO	1	1	1			
21	6EK–11181–00	GASKET, CYLINDER HEAD 1 JUNTA, DE CULATA 1	1	1	1			
22	99530–14016	PIN, DOWEL PASADOR, DE ESPIGA	2	2	2			
23	90155–10008	SCREW, FLAT FILLISTER TORNILLO CABEZA PLANA RAN.	10	10	10			
24	90105–06037	BOLT, FLANGE TORNILLO	1	1	1			
25	6EK–11191–00	COVER, CYLINDER HEAD 1 TAPA CULATA DE CILINDRO 1	1	1	1			
26	6EK–11168–00	COVER, BREATHER CUBIERTA RESPIRADERO	1	1	1			
27	97607–04208	SCREW, WITH WASHER TORNILLO CAB CON PLANA C/ARAN	6	6	6			

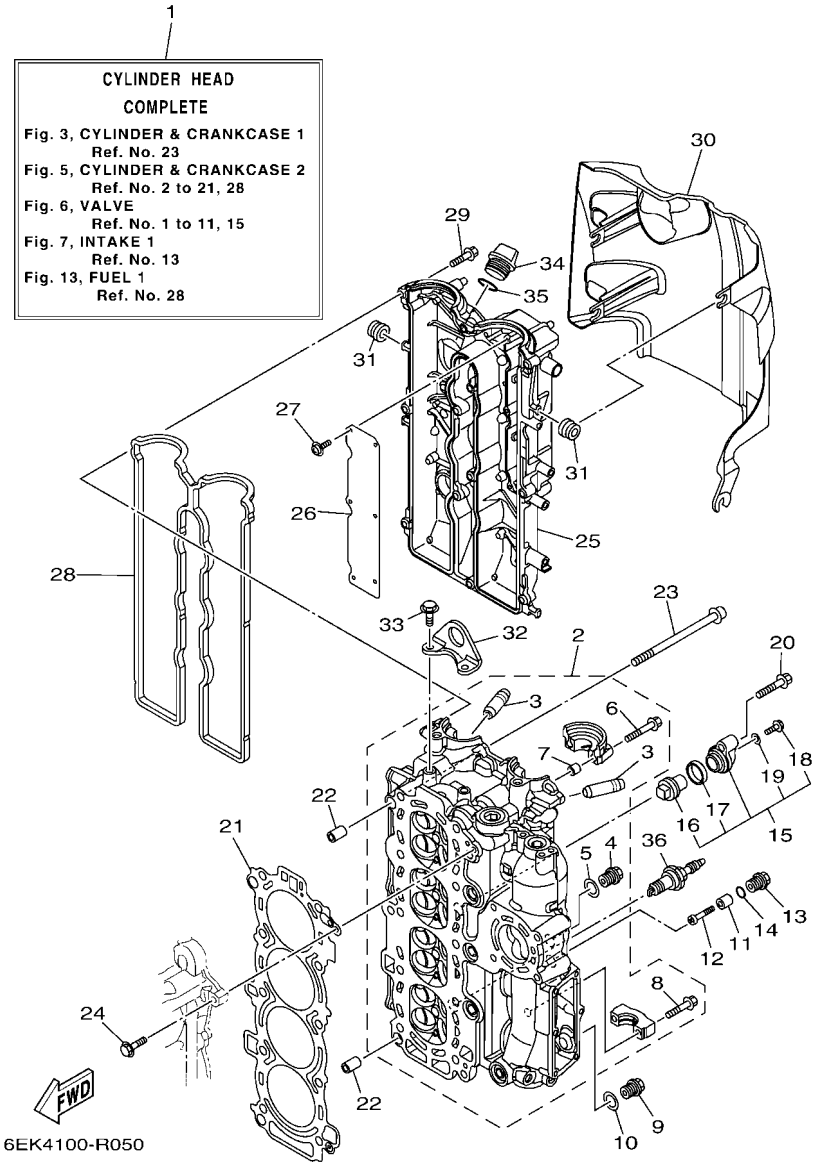

FIG. 5 CYLINDER & CRANKCASE 2 — CILINDRO & CARTER 2

REF. NO.	PART NO. CODIGO Nº	DESCRIPTION DESCRIPCION	ET	EHT	6EL4			REMARKS OBSERVACIONES
28	6EK–11193–00	GASKET, HEAD COVER 1 EMPAQUE	1	1	1			
29	95895–06030	BOLT, FLANGE TORNILLO DE REBORDE	12	12	12			
30	6EK–11192–00	COVER, CYLINDER HEAD 2 TAPA CULATA DE CILINDRO 2	1	1	1			
31	90480–12314	GROMMET TAPON	4	4	4			
32	6EK–11119–00	HANGER, ENGINE SOPORTE DEL MOTOR	1	1	1			
33	95895–08020	BOLT, FLANGE TORNILLO DE REBORDE	2	2	2			
34	6G8–15363–00	PLUG, OIL TAPON DE ACEITE	1	1	1			
35	93210–24M79	O-RING ANILLO O	1	1	1			
36	94702–00437	PLUG, SPARK (NGK LKR6E) BUJIA (NGK LKR6E)	4	4	4			

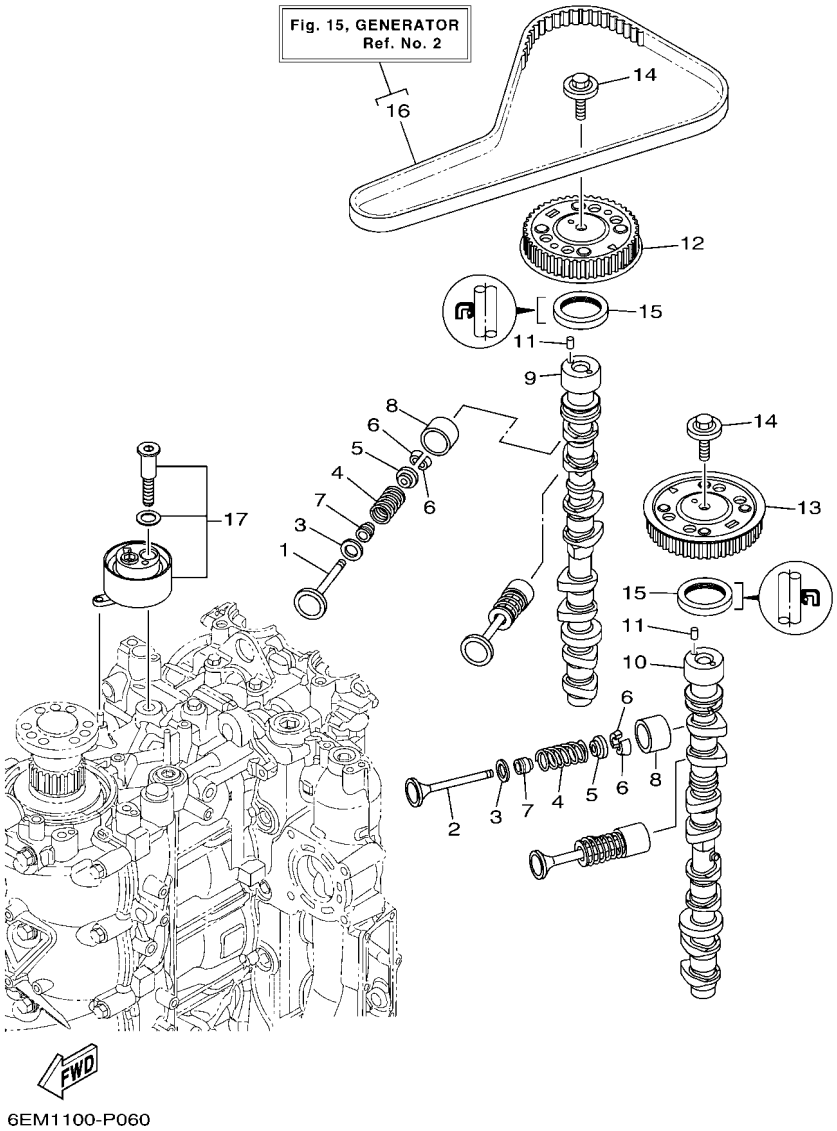

6EM1100-P060

FIG. 6 VALVE — VALVULA

REF. NO.	PART NO. CODIGO Nº	DESCRIPTION DESCRIPCION	ET	EHT	6EL4			REMARKS OBSERVACIONES
1	6EK–12111–00	VALVE, INTAKE VALVULA DE ADMISION	8	8	8			
2	6EK–12121–00	VALVE, EXHAUST VALVULA DE ESCAPE	8	8	8			
3	62Y–12116–00	SEAT, VALVE SPRING ASIENTO RESORTE DE VALVULA	16	16	16			
4	30X–12114–00	SPRING, VALVE OUTER RESORTE VALVULA EXTERIOR	16	16	16			
5	30X–12117–00	RETAINER, VALVE SPRING RETEN RESORTE DE VALVULA	16	16	16			
6	30X–12118–00	LOCK, VALVE SPRING RETAINER SEGURO DE VALVULA	32	32	32			
7	51Y–12119–00	SEAL, VALVE STEM SELLO DE ACEITE VALVULA	16	16	16			
8	6D8–12153–00	LIFTER, VALVE (12) LEVANTADOR DE VALVULA (12)	16	16	16			UR UR
	6D8–12153–10	LIFTER, VALVE (14) LEVANTADOR DE VALVULA (14)	16	16	16			UR UR
	6D8–12153–20	LIFTER, VALVE (16) LEVANTADOR DE VALVULA (16)	16	16	16			UR UR
	6D8–12153–30	LIFTER, VALVE (18) LEVANTADOR DE VALVULA (18)	16	16	16			UR UR
	6D8–12153–40	LIFTER, VALVE (20) LEVANTADOR DE VALVULA (20)	16	16	16			UR UR
	6D8–12153–50	LIFTER, VALVE (22) LEVANTADOR DE VALVULA (22)	16	16	16			UR UR
	6D8–12153–60	LIFTER, VALVE (24) LEVANTADOR DE VALVULA (24)	16	16	16			UR UR
	6D8–12153–70	LIFTER, VALVE (26) LEVANTADOR DE VALVULA (26)	16	16	16			UR UR
	6D8–12153–80	LIFTER, VALVE (28) LEVANTADOR DE VALVULA (28)	16	16	16			UR UR
	6D8–12153–90	LIFTER, VALVE (30) LEVANTADOR DE VALVULA (30)	16	16	16			UR UR
	6D8–12153–A0	LIFTER, VALVE (32) LEVANTADOR DE VALVULA (32)	16	16	16			UR UR
	6D8–12153–B0	LIFTER, VALVE (34) LEVANTADOR DE VALVULA (34)	16	16	16			UR UR
	6D8–12153–C0	LIFTER, VALVE (36) LEVANTADOR DE VALVULA (36)	16	16	16			UR UR
	6D8–12153–D0	LIFTER, VALVE (38) LEVANTADOR DE VALVULA (38)	16	16	16			UR UR
	6D8–12153–E0	LIFTER, VALVE (40) LEVANTADOR DE VALVULA (40)	16	16	16			UR UR
	6D8–12153–F0	LIFTER, VALVE (42) LEVANTADOR DE VALVULA (42)	16	16	16			UR UR
	6D8–12153–G0	LIFTER, VALVE (44) LEVANTADOR DE VALVULA (44)	16	16	16			UR UR
	6D8–12153–H0	LIFTER, VALVE (46) LEVANTADOR DE VALVULA (46)	16	16	16			UR UR
	6D8–12153–J0	LIFTER, VALVE (48) LEVANTADOR DE VALVULA (48)	16	16	16			UR UR
	6D8–12153–K0	LIFTER, VALVE (50) LEVANTADOR DE VALVULA (50)	16	16	16			UR UR

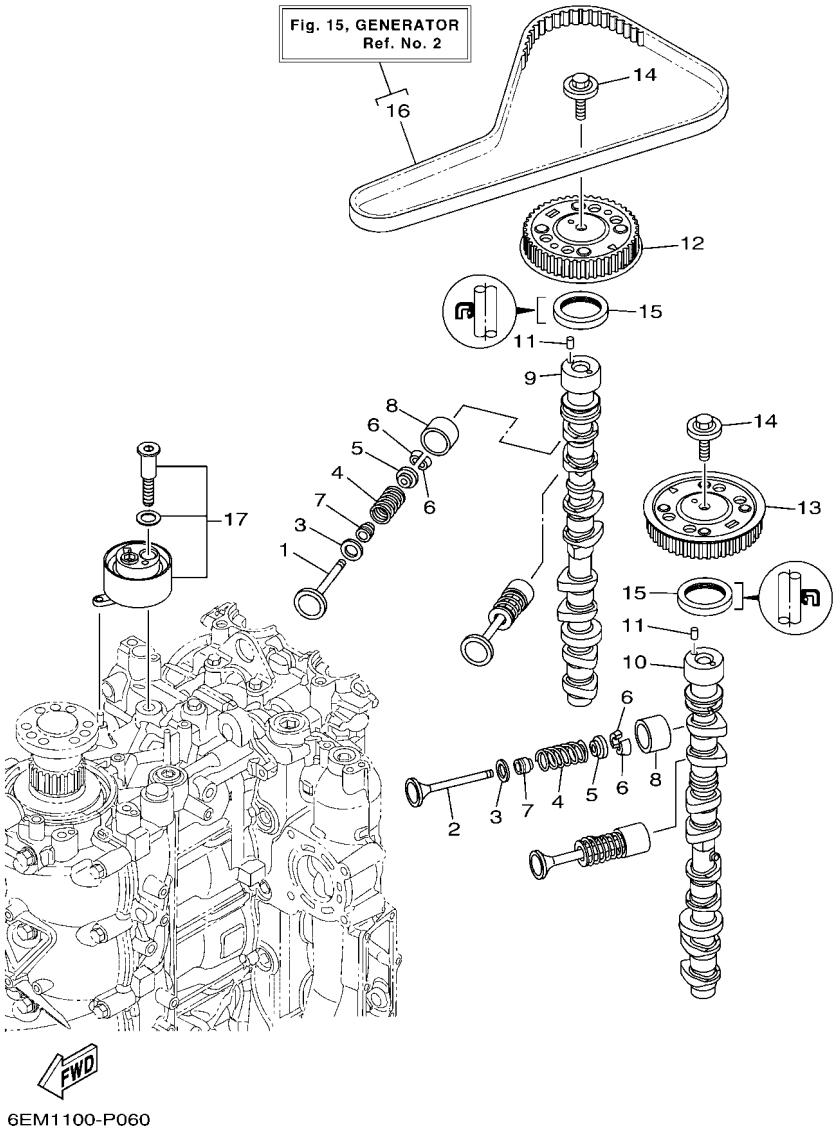

FIG. 6 VALVE — VALVULA

REF. NO.	PART NO. CODIGO Nº	DESCRIPTION DESCRIPCION	ET	EHT	6EL4			REMARKS OBSERVACIONES
8	6D8–12153–L0	LIFTER, VALVE (52) LEVANTADOR DE VALVULA (52)	16	16	16			UR UR
	6D8–12153–M0	LIFTER, VALVE (54) LEVANTADOR DE VALVULA (54)	16	16	16			UR UR
	6D8–12153–N0	LIFTER, VALVE (56) LEVANTADOR DE VALVULA (56)	16	16	16			UR UR
	6D8–12153–P0	LIFTER, VALVE (58) LEVANTADOR DE VALVULA (58)	16	16	16			UR UR
	6D8–12153–R0	LIFTER, VALVE (60) LEVANTADOR DE VALVULA (60)	16	16	16			UR UR
	6D8–12153–S0	LIFTER, VALVE (62) LEVANTADOR DE VALVULA (62)	16	16	16			UR UR
	6D8–12153–T0	LIFTER, VALVE (64) LEVANTADOR DE VALVULA (64)	16	16	16			UR UR
	6D8–12153–U0	LIFTER, VALVE (66) LEVANTADOR DE VALVULA (66)	16	16	16			UR UR
	6D8–12153–V0	LIFTER, VALVE (68) LEVANTADOR DE VALVULA (68)	16	16	16			UR UR
9	6EK–12171–00	CAMSHAFT 1 ARBOL DE LEVAS 1	1	1	1			
10	6EK–12181–00	CAMSHAFT 2 ARBOL DE LEVAS 2	1	1	1			
11	93605–10108	PIN, DOWEL PASADOR DE CLAVIJA	2	2	2			
12	6EK–11537–00	GEAR, DRIVEN ENGRANAJE TRACCION	1	1	1			
13	6EK–11567–00	GEAR, DRIVEN 2 ENGRANAJE TRACCION 2	1	1	1			
14	90119–10050	BOLT, WITH WASHER TORNILLO CON ARANDELA	2	2	2			
15	93102–38008	OIL SEAL SELLO ACEITE	2	2	2			
16	6EK–W4624–00	BELT (WITH ROTOR BOLTS) CORREA (CON PERNO)	1	1	1			
17	6EK–11590–00	TENSIONER ASSY TENSOR COMPLET	1	1	1			

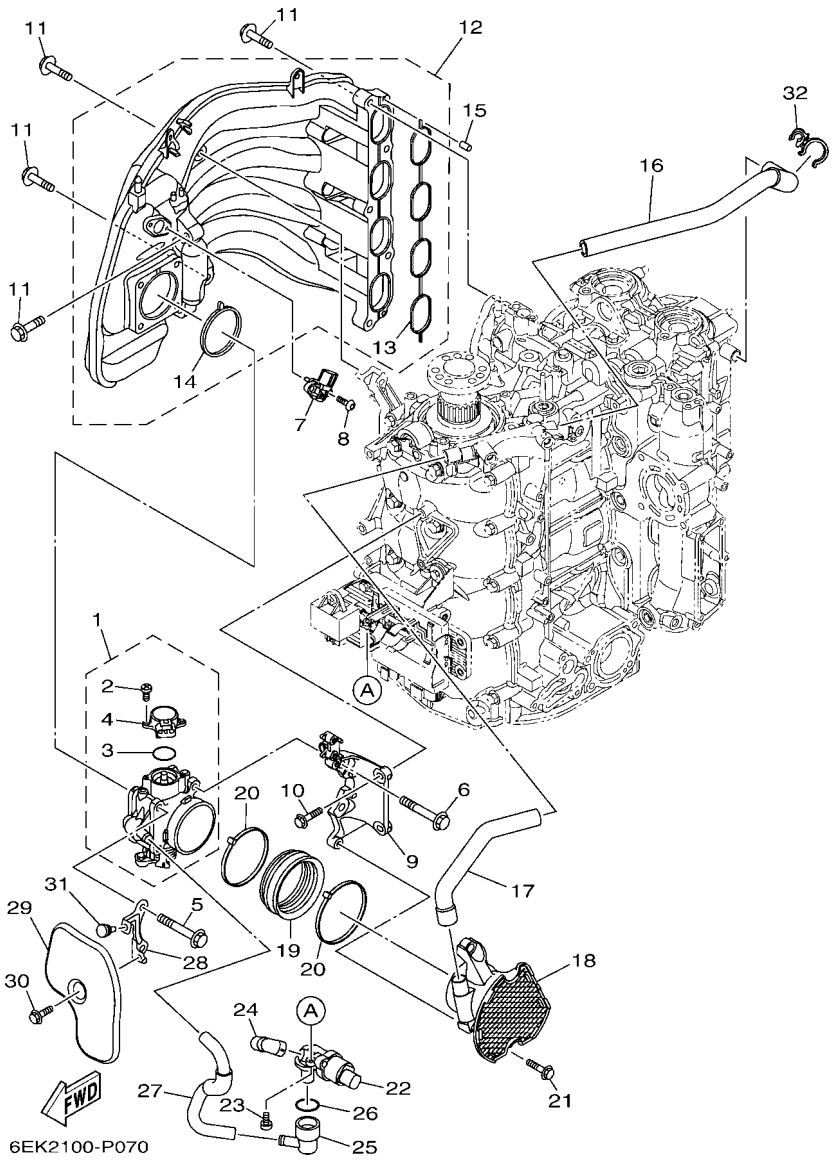

FIG. 7 INTAKE 1 — ADMISION 1

REF. NO.	PART NO. CODIGO Nº	DESCRIPTION DESCRIPCION	ET	EHT	6EL4			REMARKS OBSERVACIONES
1	6EK–13751–00	BODY, THROTTLE 1 CAJA 1	1	1	1			
2	6C5–81145–00	.SCREW 1 .TORNILLO 1	2	2	2			
3	6C5–8182L–00	.O-RING 1 .ANILLO EN O	1	1	1			
4	6C5–85885–00	.THROTTLE SENSOR ASSY .TERMICA SENSORIO	1	1	1			
5	95875–08060	BOLT, FLANGE TORNILLO	2	2	2			
6	90105–08186	BOLT, FLANGE TORNILLO	2	2	2			
7	68F–83688–10	SENSOR ASSY SENSOR COMP.	1	1	1			
8	90111–05037	BOLT,HEX. SOCKET BUTTON TORNILLO	2	2	2			
9	6EK–13152–02	STAY 2 SOPORTE 2	1	1	1			
10	95875–06025	BOLT, FLANGE TORNILLO	2	2	2			
11	90119–08022	BOLT, WITH WASHER TORNILLO CON ARANDELA	9	9	9			
12	6EK–13641–00	MANIFOLD, INTAKE 1 CONECTOR DE ADMISSION 1	1	1	1			
13	6EK–13645–00	.GASKET, MANIFOLD 1 .EMPAQUE	1	1	1			
14	6EK–13646–00	.GASKET, MANIFOLD 2 .EMPAQ. DE MULTIPLE 2	1	1	1			
15	91690–50014	PIN, SPRING PASADOR DE RESORTE	2	2	2			
16	6EK–15373–00	PIPE, BREATHER MANGUELA DE RESPIRADERO	1	1	1			
17	6EK–15393–00	PIPE, BREATHER 2 TUBO, RESPIRADERO2	1	1	1			
18	6DA–14440–00	SILENCER ASSY, INTAKE SILENCIADOR COMPL DE ADMISION	1	1	1			
19	6P2–1441J–00	PIPE, SILENCER TUBO	1	1	1			
20	90464–99004	CLAMP BRIDA	2	2	2			
21	95875–06025	BOLT, FLANGE TORNILLO	2	2	2			
22	6C5–13713–00	VALVE, IDLE SPEED CONTROL VALVULA, AJUSTE DE VELOCIDAD	1	1	1			
23	97980–05214	SCREW, WITH WASHER TORNILLO, CON ARANDELA	2	2	2			
24	68V–13897–00	PIPE, AIR TUBO DE AIRE	1	1	1			
25	6CJ–11372–00	NIPPLE, HOSE NIPLE DE MANGUERA	1	1	1			
26	93210–33003	O-RING ANILLO O	1	1	1			
27	6EK–13543–00	HOSE, AIR TUBO DE AIRE	1	1	1			

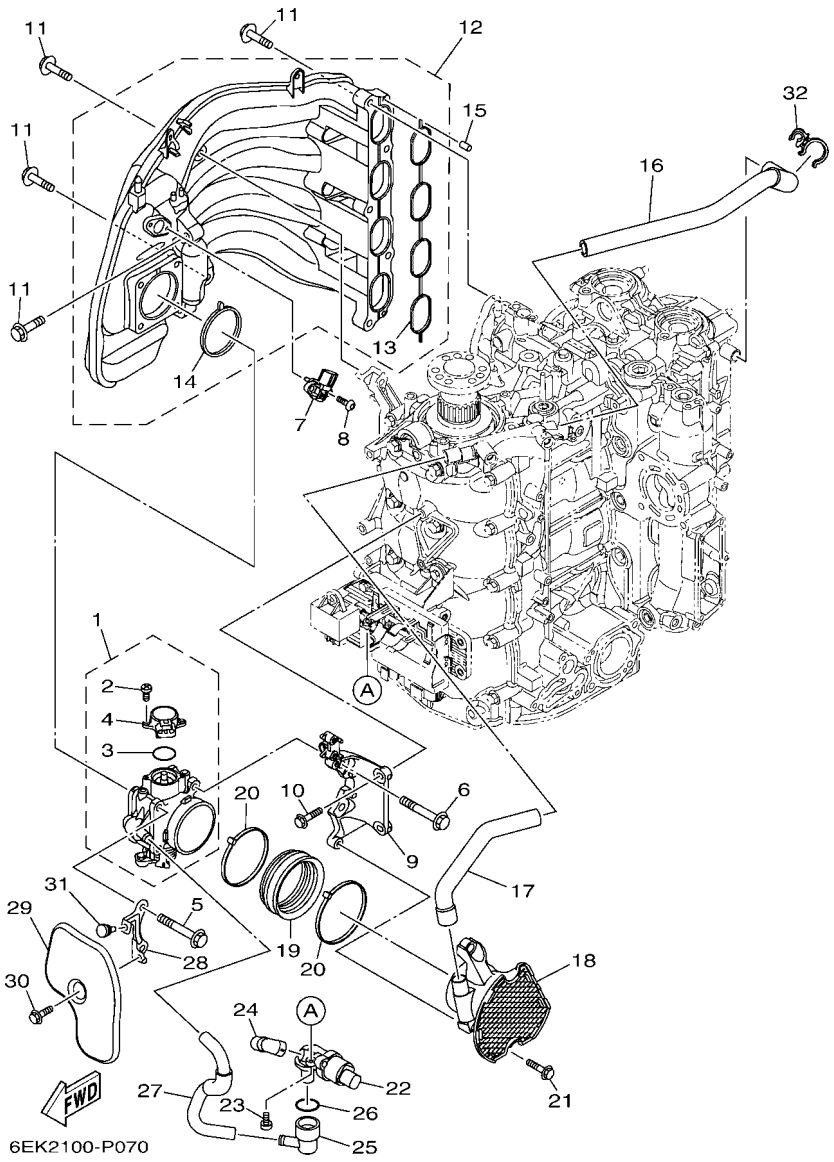

FIG. 7 INTAKE 1 — ADMISION 1

REF. NO.	PART NO. CODIGO Nº	DESCRIPTION DESCRIPCION	ET	EHT	6EL4			REMARKS OBSERVACIONES
28	6EK–13843–00	PLATE 1 PLACA 1	1	1	1			
29	6EK–13881–00	COVER 1 CUBIERTA 1	1	1	1			
30	95895–06016	BOLT, FLANGE TORNILLO DE REBORDE	1	1	1			
31	90480–06M19	GROMMET TAPON	1	1	1			
32	90464–21002	CLAMP BRIDA	1	1	1			

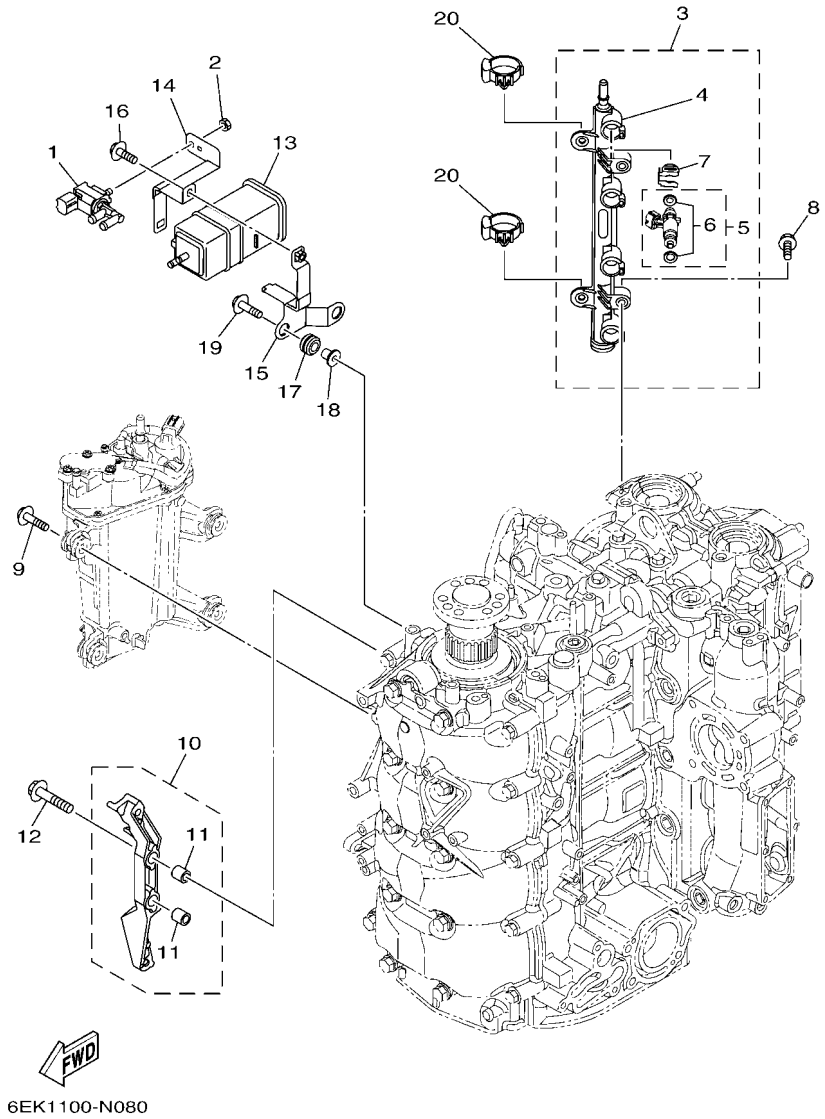

FIG. 8 INTAKE 2 — ADMISION 2

REF. NO.	PART NO. CODIGO Nº	DESCRIPTION DESCRIPCION	ET	EHT	6EL4			REMARKS OBSERVACIONES
1	6C5–86120–00	SOLENOID VALVE ASSY VALVULA SOLENOIDE CONJ.	1	1	1			
2	95380–06600	NUT, HEXAGON TUERCA	1	1	1			
3	6EK–13160–00	DELIVERY PIPE ASSY 1 TUBO DE LLEGADA CONJUNTO 1	1	1	1			
4	6EK–13161–00	.PIPE, DELIVERY 1 .TUBO CONDUCTOR 1	1	1	1			
5	6EK–13761–00	.INJECTOR .INYECTOR	4	4	4			
6	6AW–1410B–00	..PACKING KIT ..JUEGO DE EMPAQUE	1	1	1			
7	6AW–13577–10	.CLIP .PRESILLA	4	4	4			
8	90105–06M08	BOLT, FLANGE TORNILLO	2	2	2			
9	90119–06269	BOLT, WITH WASHER TORNILLO CON ARANDELA	4	4	4			
10	6EK–14291–00	BRACKET 1 SOPORTE 1	1	1	1			
11	99590–10114	.PIN, DOWEL .PASADOR, DE ESPIGA	2	2	2			
12	90105–08M87	BOLT, FLANGE TORNILLO	2	2	2			
13	6P2–24170–00	CANISTER ASSY FRANJA DE DEPOSITO DE COMBUST.	1	1	1			
14	6EK–2419A–00	HOLDER SOSTEN	1	1	1			
15	6EK–2134X–00	BRACKET, CANISTER SOPORTE	1	1	1			
16	95895–06014	BOLT, FLANGE TORNILLO DE REBORDE	1	1	1			
17	90480–10M23	GROMMET TAPON	2	2	2			
18	90387–06289	COLLAR ESPACIADOR	2	2	2			
19	90119–06M17	BOLT, WITH WASHER TORNILLO CON ARANDELA	2	2	2			
20	90464–07209	CLAMP BRIDA	2	2	2			

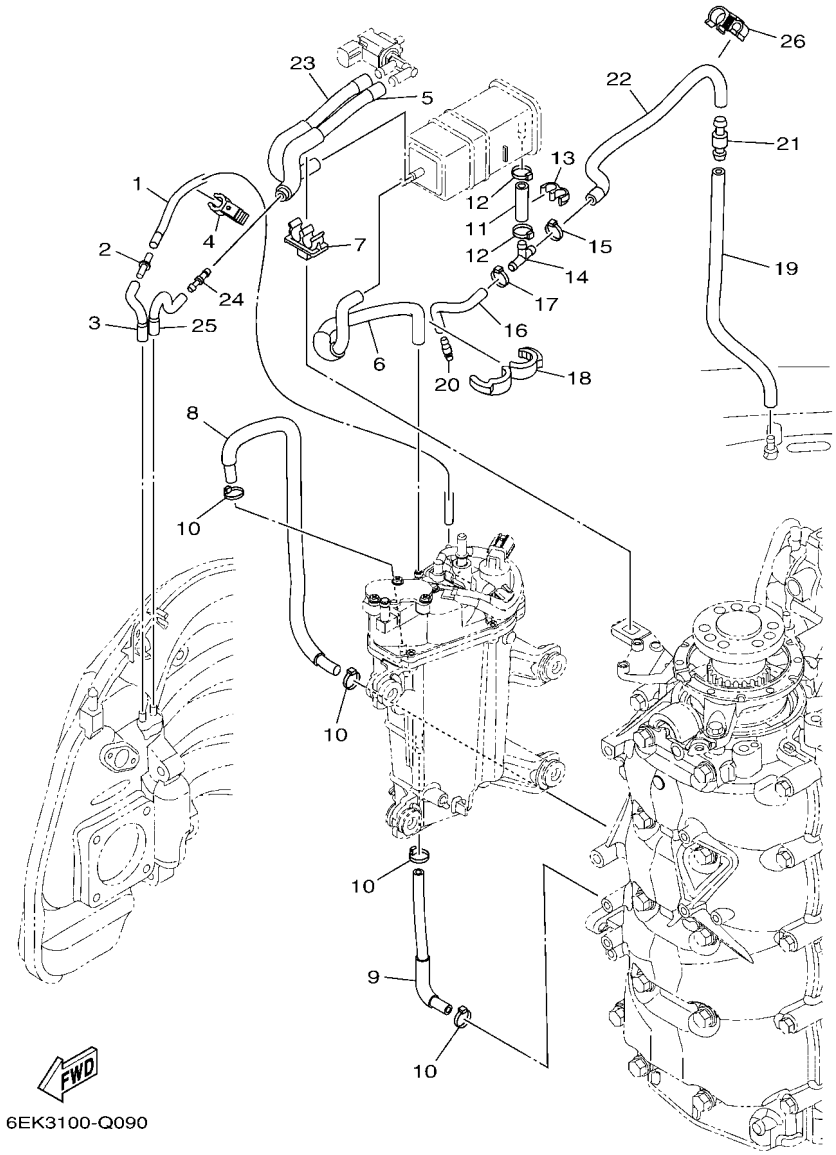

6EK3100-Q090

FIG. 9 INTAKE 3 — ADMISION 3

REF. NO.	PART NO. CODIGO Nº	DESCRIPTION DESCRIPCION	ET	EHT	6EL4			REMARKS OBSERVACIONES
1	6EK–13532–00	HOSE, VACUUM SENSING 3 MANGUERA, DE VACIO 3	1	1	1			
2	5PS–14568–00	JOINT UNION	1	1	1			
3	6EK–1475G–00	PIPE 4 TUBO 4	1	1	1			
4	90464–12006	CLAMP BRIDA	1	1	1			
5	6EK–2416A–01	HOSE TUBO DE COMBUSTIBLE	1	1	1			
6	6EK–1475A–00	PIPE 1 TUBO 1	1	1	1			
7	90464–11012	CLAMP BRIDA	1	1	1			
8	6EK–12576–00	HOSE 1 MANGUERA 1	1	1	1			
9	6EK–12577–00	HOSE 2 MANGUERA 2	1	1	1			
10	90465–11M10	CLAMP BRIDA	4	4	4			
11	6AW–13545–10	HOSE 1 SELLO	1	1	1			
12	90465–11M10	CLAMP BRIDA	2	2	2			
13	90464–10M57	CLAMP BRIDA	1	1	1			
14	688–24378–00	PIPE, JOINT 3 TUBO DE UNION 3	1	1	1			
15	90465–11M10	CLAMP BRIDA	1	1	1			
16	6EK–13546–00	HOSE 2 SELLO	1	1	1			
17	90465–11M10	CLAMP BRIDA	1	1	1			
18	90464–16001	CLAMP BRIDA	1	1	1			
19	6EK–13547–00	HOSE 3 SELLO	1	1	1			
20	6E5–21744–00	BREATHER RESPIRADERO	1	1	1			
21	63D–21744–00	BREATHER RESPIRADERO	1	1	1			
22	6EK–13548–01	HOSE, AIR 4 TUBO DE AIRE 4	1	1	1			
23	6EK–1475F–00	PIPE 3 TUBO 3	1	1	1			
24	6EK–14989–00	ORIFICE, AIR VENT ORIFICIO DE VENTILACION	1	1	1			
25	6EK–1475G–00	PIPE 4 TUBO 4	1	1	1			
26	90464–12010	CLAMP BRIDA	1	1	1			

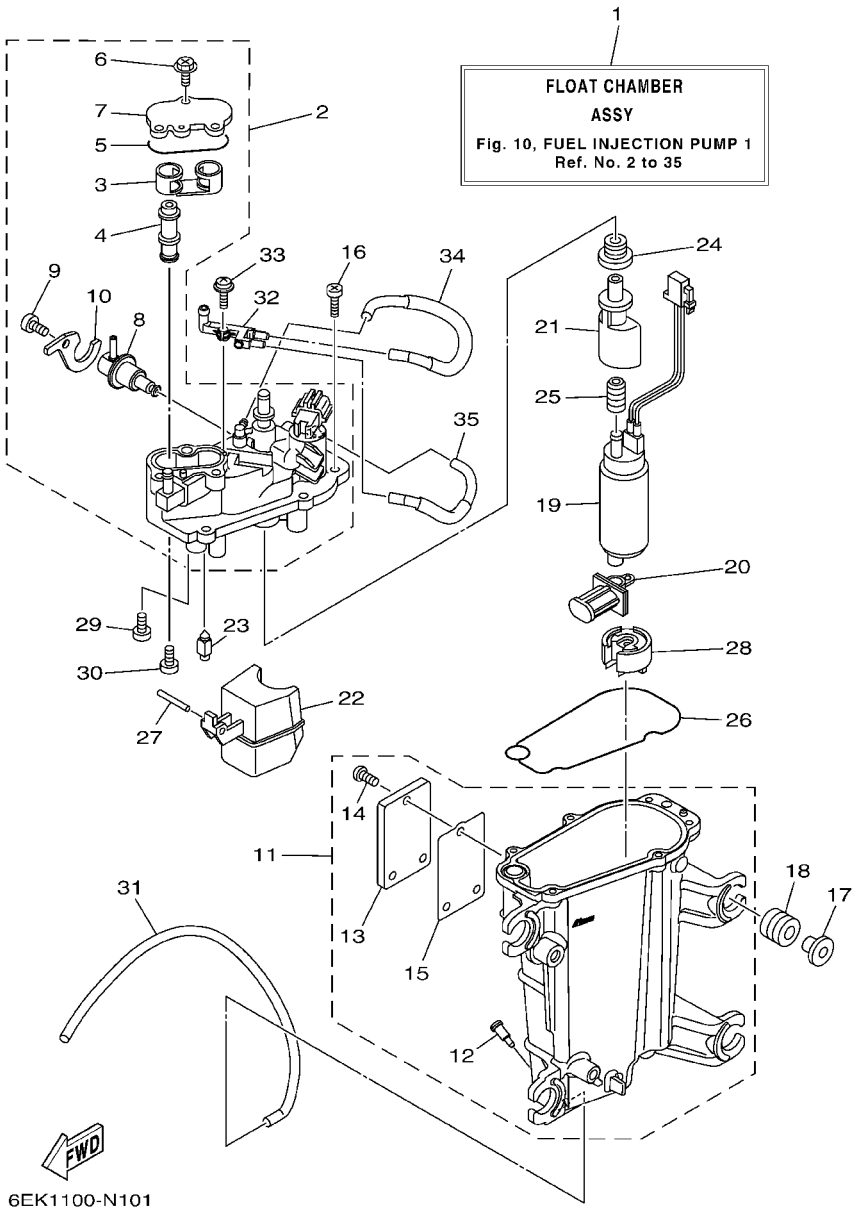

FIG. 10 FUEL INJECTION PUMP 1 — BOMBA DE INYECTOR 1

REF. NO.	PART NO. CODIGO Nº	DESCRIPTION DESCRIPCION	ET	EHT	6EL4			REMARKS OBSERVACIONES
1	6EK–14180–01	FLOAT CHAMBER ASSY CAMARA DE BOIA COMPLETE	1	1	1			EXCEPT FOR BRA EXCEPT FOR BRA
	6EK–14180–11	FLOAT CHAMBER ASSY CAMARA DE BOIA COMPLETE	1		1			FOR BRA FOR BRA
2	6EK–14182–00	COVER, FLOAT CHAMBER TAPA DE CAMARA DE BOIA	1	1	1			EXCEPT FOR BRA EXCEPT FOR BRA
	6EK–14182–10	COVER, FLOAT CHAMBER TAPA DE CAMARA DE BOIA	1		1			FOR BRA FOR BRA
3	6EK–24478–00	.JOINT .CONEXION	1	1	1			
4	6EK–24481–00	.PLUG .TAPON	1	1	1			
5	6CB–13016–00	.O-RING .ANILLO O	1	1	1			
6	6CB–14216–00	.SCREW .TORNILLO	3	3	3			
7	6CB–24217–00	.COVER .CUBIERTA	1	1	1			EXCEPT FOR BRA EXCEPT FOR BRA
	6CB–24217–10	.COVER .CUBIERTA	1		1			FOR BRA FOR BRA
8	6CB–13906–01	.REGULATOR, PRESSURE .REGULADOR	1	1	1			
9	6CB–14564–00	.SCREW .TORNILLO	1	1	1			
10	6DA–14146–00	.PLATE .PLACA SOPORTE	1	1	1			
11	6EK–14181–00	BODY, FLOAT CHAMBER 1 CUERPO DE CAMARA DE BOIA	1	1	1			
12	6P2–14191–00	.PLUG, DRAIN .TORNILLO, DE DRENAJE	1	1	1			
13	6EK–24452–00	.COVER .CUBIERTA	1	1	1			
14	6K8–14591–10	.SCREW .TORNILLO	3	3	3			
15	6CB–24482–00	.GASKET 1 .EMPAQUE 1	1	1	1			
16	63P–14567–00	SCREW TORNILLO	6	6	6			
17	63P–13716–00	COLLAR COLLAR	4	4	4			
18	6CB–13593–00	DAMPER COJINETE DE RODILLOS	4	4	4			
19	68V–13907–20	FUEL PUMP COMP. BOMBA DE COMBUSTIBLE COMPLETA	1	1	1			EXCEPT FOR BRA EXCEPT FOR BRA
	68V–13907–30	FUEL PUMP COMP. BOMBA DE COMBUSTIBLE COMPLETA	1		1			FOR BRA FOR BRA
20	63P–13915–00	FILTER FILTRO	1	1	1			
21	6AW–13132–00	JOINT JUNTA	1	1	1			
22	6CB–14985–00	FLOAT BOIA	1	1	1			
23	6CB–14546–00	VALVE, NEEDLE VALVULA DE AGUJA	1	1	1			

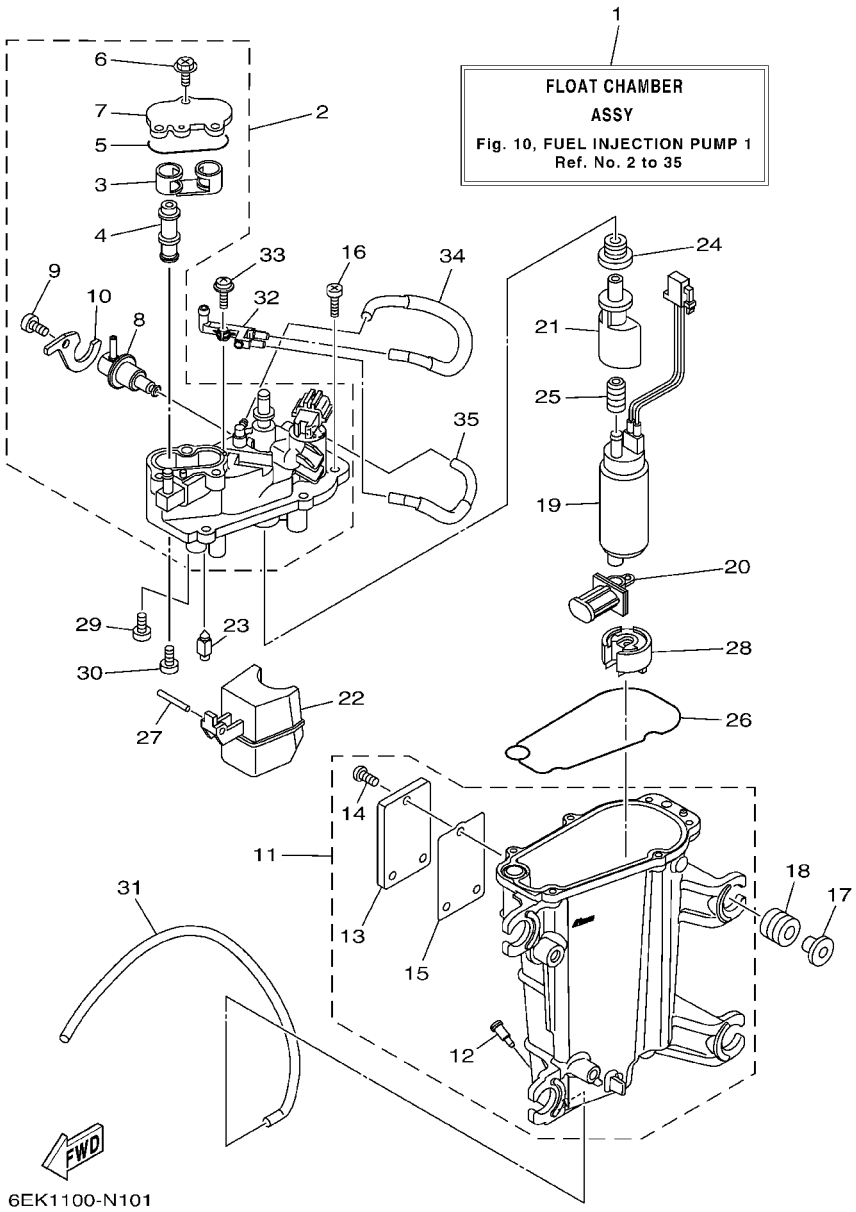

FIG. 10 FUEL INJECTION PUMP 1 — BOMBA DE INYECTOR 1

REF. NO.	PART NO. CODIGO Nº	DESCRIPTION DESCRIPCION	ET	EHT	6EL4			REMARKS OBSERVACIONES
24	6CB–1447B–00	BUSH 1 BUJE 1	1	1	1			
25	6AW–13781–00	DAMPER, PUMP AMORTIGUADOR DE BOMBA	1	1	1			
26	6CB–14984–00	GASKET, FLOAT CHAMBER EMPAQUE CAMARA DE BOIA	1	1	1			
27	6P2–14386–00	PIN, FLOAT PASADOR DE BOIA	1	1	1			
28	6AW–13784–00	COVER, PUMP CUBIERTA DE BOMBA	1	1	1			
29	4SV–24453–00	SCREW TORNILLO	1	1	1			EXCEPT FOR BRA EXCEPT FOR BRA
	69J–24453–00	SCREW TORNILLO	1		1			FOR BRA FOR BRA
30	98507–04008	SCREW, PAN HEAD TORNILLO DE CABEZA CON PLANA	1	1	1			EXCEPT FOR BRA EXCEPT FOR BRA
	68V–14592–10	SCREW TORNILLO	1		1			FOR BRA FOR BRA
31	6AW–14197–00	PIPE TUBO RESPIRADERO	1	1	1			
32	68V–24379–10	PIPE, JOINT 4 TUBO DE UNION 4	1	1	1			
33	68V–14216–00	SCREW TORNILLO	1	1	1			
34	6EK–1475H–00	PIPE 5 TUBO 5	1	1	1			
35	6EK–1475J–00	PIPE 6 TUBO 6	1	1	1			

FIG. 11 FUEL INJECTION PUMP 2 — BOMBA DE INYECTOR 2

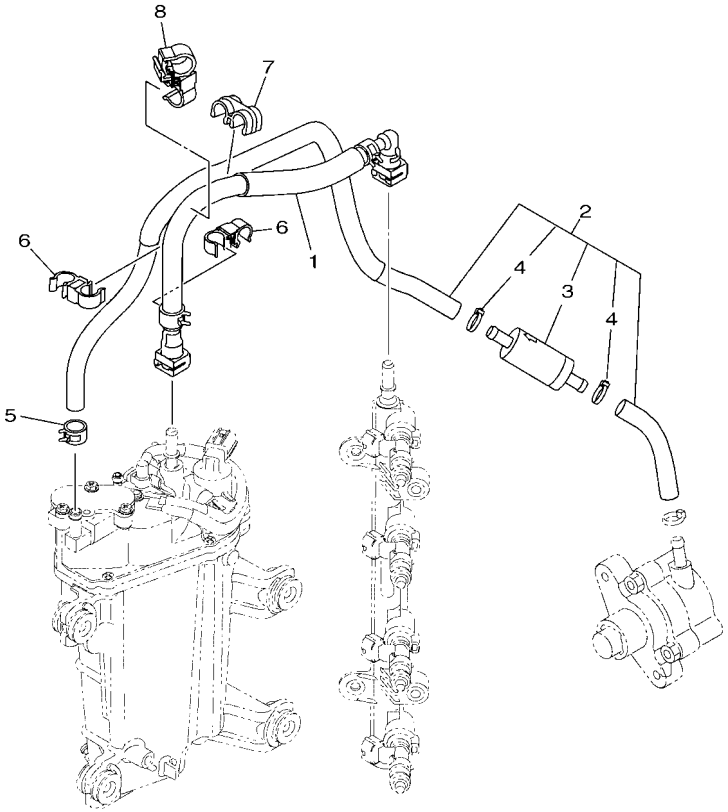

6EK1100-N110

REF. NO.	PART NO. CODIGO Nº	DESCRIPTION DESCRIPCION	ET	EHT	6EL4			REMARKS OBSERVACIONES
1	6EK–2450B–00	FUEL HOSE ASSY TUBO DE COMBUSTIBLE COMPL.	1	1	1			
2	6EK–24330–00	FUEL PIPE ASSY TUBO DE COMBUSTIBLE COMPL.	1	1	1			
3	6C5–24251–00	.STRAINER 1 .COLADOR 1	1	1	1			
4	90465–11M10	.CLAMP .BRIDA	2	2	2			
5	90467–120A7	CLIP PRESILLA	1	1	1			
6	90464–12009	CLAMP BRIDA	2	2	2			
7	90464–12224	CLAMP BRIDA	1	1	1			
8	90464–12012	CLAMP BRIDA	1	1	1			

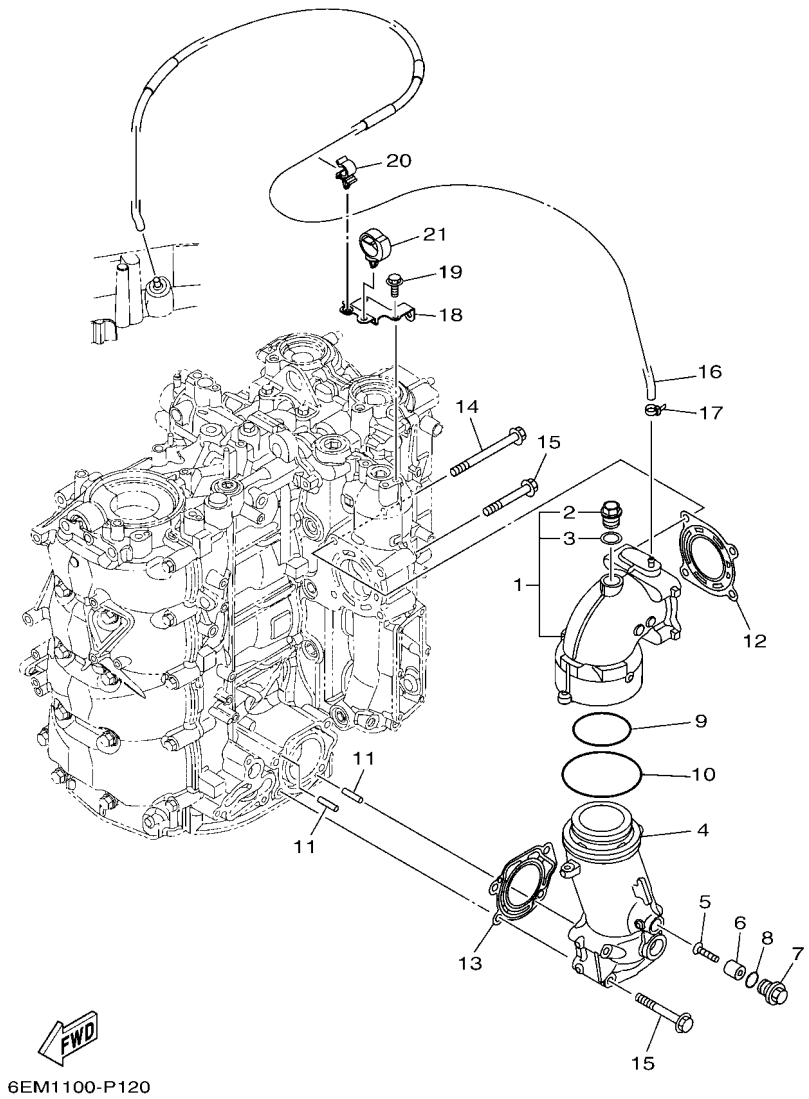

FIG. 12 EXHAUST DESCARGA

REF. NO.	PART NO. CODIGO Nº	DESCRIPTION DESCRIPCION	ET	EHT	6EL4			REMARKS OBSERVACIONES
1	6EK–14615–00	JOINT, EXHAUST 1 EMPAQUE DE ESCAPE 1	1	1	1			
2	90340–18M09	.PLUG, STRAIGHT SCREW .TORNILLO, DE DRENAJE	1	1	1			
3	90201–186F1	.WASHER, PLATE .ARANDELA PLANA	1	1	1			
4	6EK–14625–00	JOINT, EXHAUST 2 EMPAQUE DE ESCAPE 2	1	1	1			
5	98780–05025	SCREW, FLAT HEAD TORNILLO CABEZA PLANA	1	1	1			
6	6EK–11325–00	ANODE ANODO	1	1	1			
7	6G8–11197–A0	PLUG, BLIND TAPON CIEGO	1	1	1			
8	93210–13M63	O-RING ANILLO O	1	1	1			
9	93210–64001	O-RING ANILLO O	1	1	1			
10	93210–84001	O-RING ANILLO O	1	1	1			
11	91690–50014	PIN, SPRING PASADOR DE RESORTE	2	2	2			
12	6EK–41114–00	GASKET, EXHAUST OUTER COVER EMPAQUE	1	1	1			
13	6EK–41124–00	GASKET, EXHAUST OUTER COVER EMPAQUE	1	1	1			
14	90105–08247	BOLT, FLANGE TORNILLO	2	2	2			
15	90105–08220	BOLT, FLANGE TORNILLO	6	6	6			
16	6EM–42542–00	PIPE TUBO	1	1	1			
17	90465–11M10	CLAMP BRIDA	1	1	1			
18	6EK–82398–00	PLATE 3 PLACA 3	1	1	1			
19	95895–06012	BOLT, FLANGE TORNILLO DE REBORDE	2	2	2			
20	90464–09129	CLAMP BRIDA	1	1	1			
21	90464–12183	CLAMP BRIDA	1	1	1			

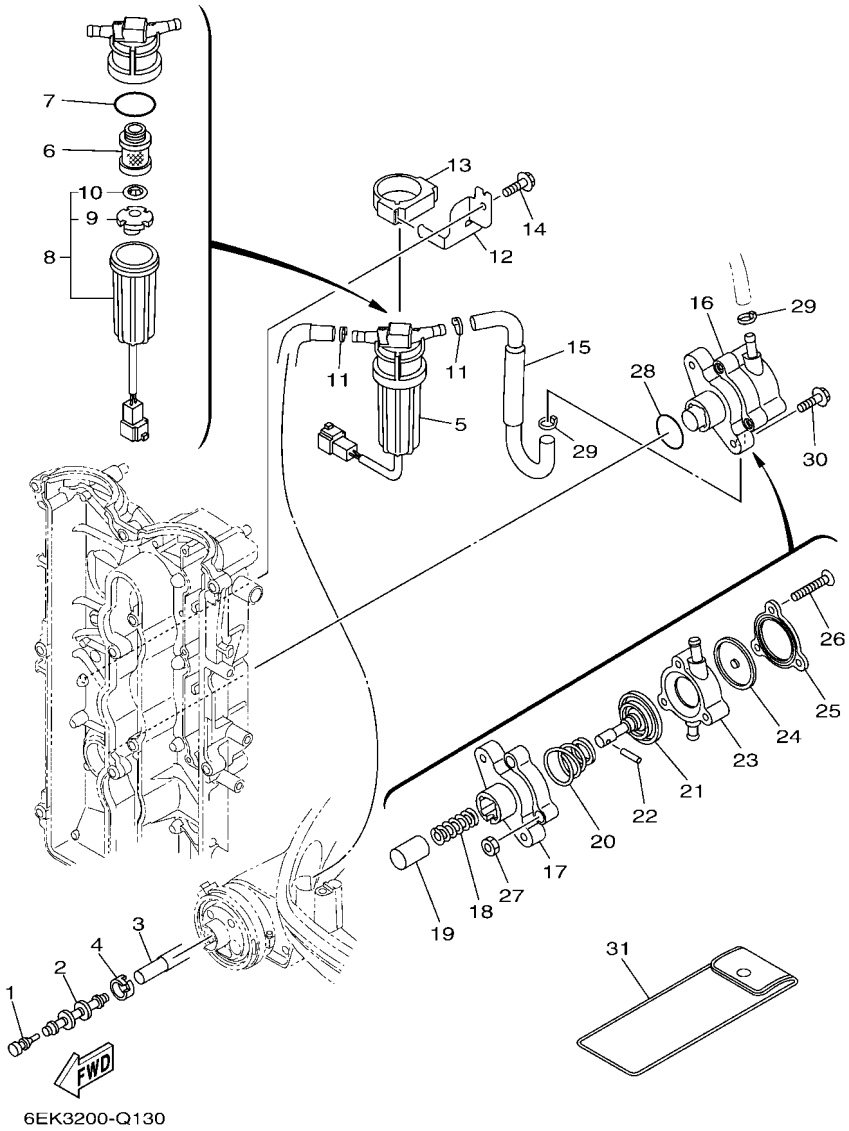

FIG. 13 FUEL 1 — COMBUSTIBLE 1

REF. NO.	PART NO. CODIGO Nº	DESCRIPTION DESCRIPCION	ET	EHT	6EL4			REMARKS OBSERVACIONES
1	689–85547–00	DAMPER AMORTIGUADOR	1	1	1			
2	6AW–24377–01	PIPE, JOINT 2 TUBO DE UNION 2	1	1	1			
3	6EK–24314–00	PIPE 4 TUBO 4	1	1	1			
4	6E5–24351–51	BAND 1 ABRAZADERA 1	1	1	1			
5	6EK–24560–00	FILTER ASSY FILTRO COMPLETO	1	1	1			
6	6D8–24563–00	.ELEMENT, FILTER .ELEMENTO DEL FILTRO	1	1	1			
7	6D8–24564–00	.GASKET .EMPAQUE	1	1	1			
8	6D8–24562–00	.CUP, FILTER .COPA DE FILTRO	1	1	1			
9	6D8–24469–00	..FLOAT, WATER LEVEL ..BOIA	1	1	1			
10	6D8–24519–00	..CLIP ..PRESILLA	1	1	1			
11	90465–11M10	CLAMP BRIDA	2	2	2			
12	6EK–24566–00	BRACKET, FILTER SOPORTE DEL FILTRO	1	1	1			
13	6EK–24568–00	BAND, FILTER BANDA DE FILTO	1	1	1			
14	95895–06016	BOLT, FLANGE TORNILLO DE REBORDE	1	1	1			
15	6EK–24311–00	PIPE, FUEL 1 TUBO DE COMBUSTIBLE 1	1	1	1			
16	6EK–24410–00	FUEL PUMP ASSY BOMBA DE COMBUSTIBLE COMPLETA	1	1	1			
17	68V–24412–00	.BODY 1 .CUERPO 1	1	1	1			
18	68V–24454–00	.SPRING .RESORTE	1	1	1			
19	63P–13131–00	.PLUNGER .ESPACIADOR	1	1	1			
20	63P–24423–00	.SPRING, DIAPHRAGM .RESORTE DE DIAFRAGMA	1	1	1			
21	68V–24411–00	.DIAPHRAGM .DIAFRAGMA	1	1	1			
22	68V–24374–00	.PIN .PASADOR	1	1	1			
23	6EK–24413–00	.BODY 2 .CUERPO 2	1	1	1			
24	68V–24471–10	.DIAPHRAGM .DIAFRAGMA	1	1	1			
25	6EK–24414–00	.BODY 3 .CUERPO 3	1	1	1			
26	68V–24444–00	.SCREW .TORNILLO	3	3	3			
27	68V–24149–00	.NUT .TUERCA	3	3	3			

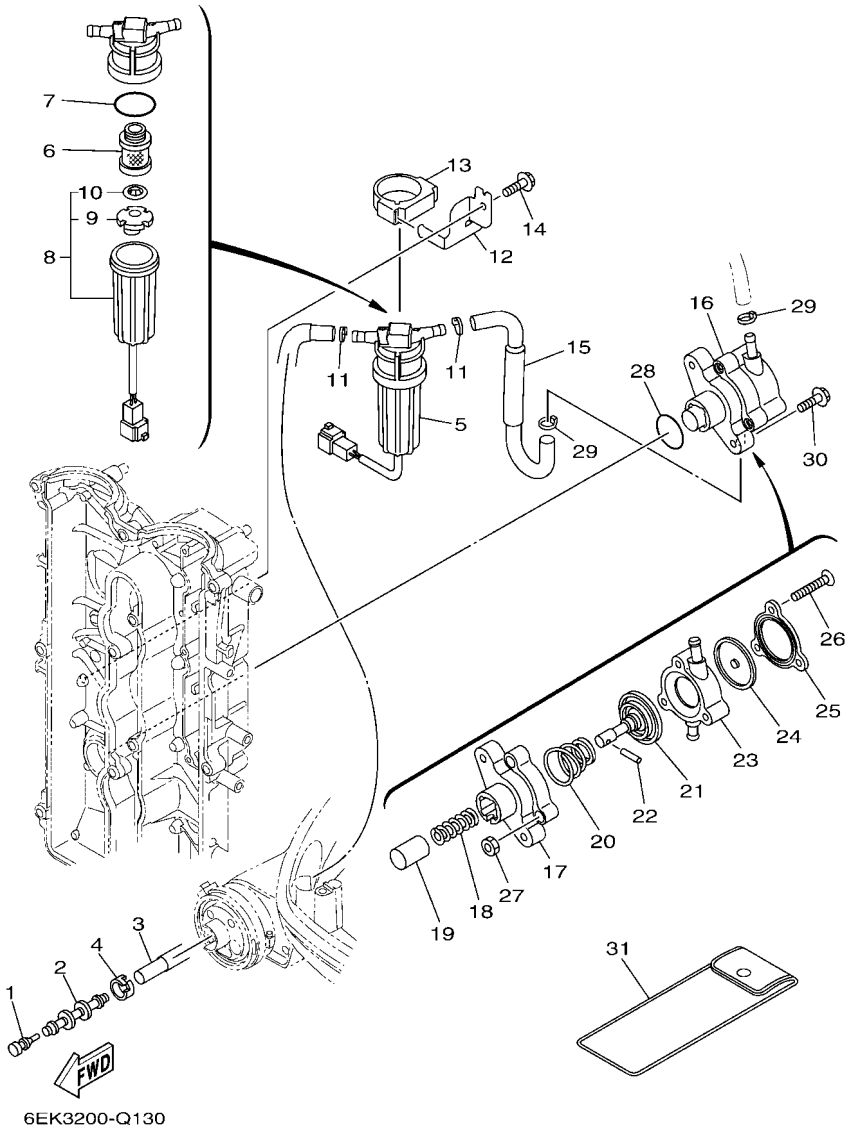

FIG. 13 FUEL 1 — COMBUSTIBLE 1

REF. NO.	PART NO. CODIGO Nº	DESCRIPTION DESCRIPCION	ET	EHT	6EL4			REMARKS OBSERVACIONES
28	93210–30682	O-RING ANILLO O	1	1	1			
29	90465–11M10	CLAMP BRIDA	2	2	2			
30	90105–06208	BOLT, FLANGE TORNILLO	2	2	2			
31	67F–28100–01	TOOL KIT JUEGO DE HERRAMIENTAS	1	1	1			UR UR
	67F–28100–10	TOOL KIT JUEGO DE HERRAMIENTAS	1					UR FOR CHN UR FOR CHN

FIG. 14 FUEL 2 — COMBUSTIBLE 2

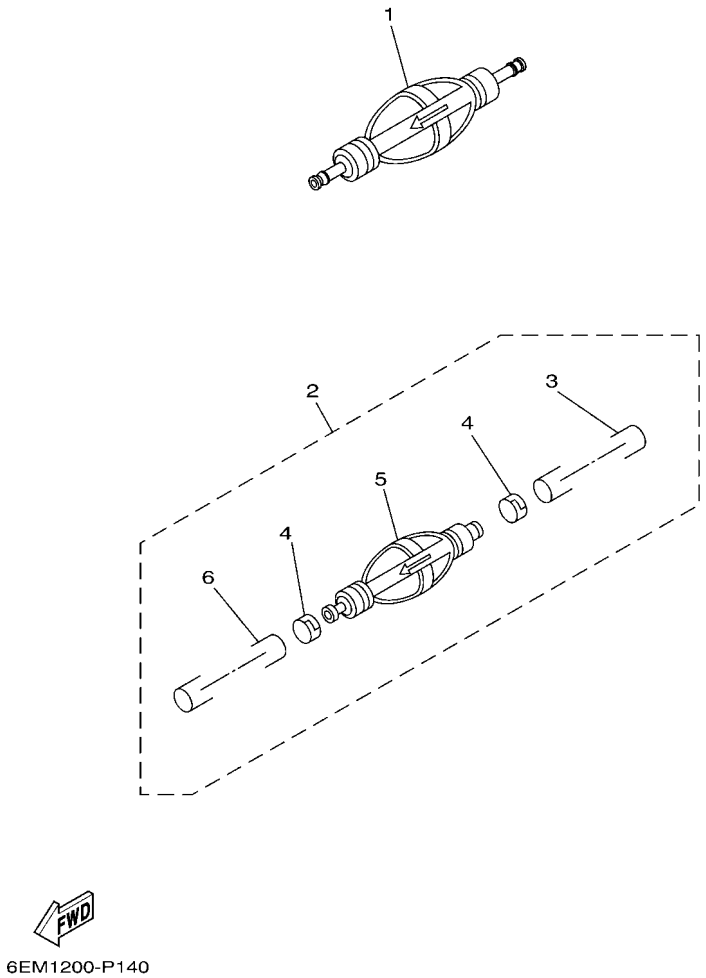

REF. NO.	PART NO. CODIGO Nº	DESCRIPTION DESCRIPCION	ET	EHT	6EL4			REMARKS OBSERVACIONES
1	6YK–24360–73	PRIMER PUMP ASSY SOPORTE BOMBA	1		1			AP FOR CAR AP FOR CAR
2	6Y2–24307–60	FUEL PIPE COMP. 2 MANGUERA COMPL,COMBUSTIBLE 2	1	1	1			AP EXCEPT FOR CAR AP EXCEPT FOR CAR
3	90445–13M01	.HOSE (L2050) .MANGUERA (L2050)	1	1	1			
4	6E5–24351–51	.BAND 1 .ABRAZADERA 1	2	2	2			
5	6Y2–24360–60	.PRIMER PUMP ASSY .SOPORTE BOMBA	1	1	1			
6	90445–13M06	.HOSE (L1500) .MANGUERA (L1500)	1	1	1			

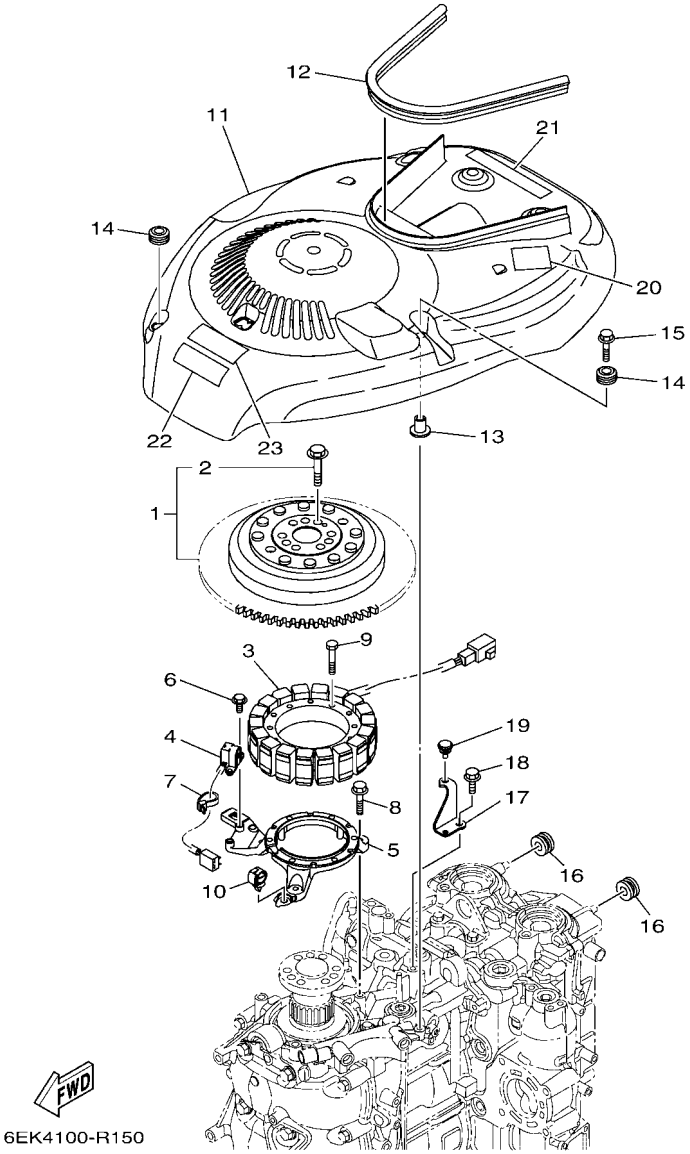

FIG. 15 GENERATOR — GENERADOR

REF. NO.	PART NO. CODIGO Nº	DESCRIPTION DESCRIPCION	ET	EHT	6EL4			REMARKS OBSERVACIONES
1	6EK–W8145–01	ROTOR ASSY WITH BOLTS ROTOR COMPLETO CON TORNILLO	1	1	1			
2	6EK–W9010–00	.BOLT SET .JUEGO DE TORNILLO	1	1	1			
3	6EK–81410–00	STATOR ASSY ESTATOR COMPLETO	1	1	1			
4	6CB–85580–00	COIL, PULSER BOBINA DE PULSACION	1	1	1			
5	6EK–85561–00	BASE, MAGNETO BASE DE MAGNETO	1	1	1			
6	97595–05516	BOLT, WITH WASHER PERNO CON ARANDELA	2	2	2			
7	90465–13M97	CLAMP BRIDA	1	1	1			
8	95895–06030	BOLT, FLANGE TORNILLO DE REBORDE	3	3	3			
9	91312–06035	BOLT, HEXAGON SOCKET HEAD TORNILLO ALLEN	6	6	6			
10	90464–13249	CLAMP BRIDA	1	1	1			
11	6EK–81337–00	COVER, FLYWHEEL CUBIERTA DE VOLANTE	1	1	1			
12	6EK–42617–00	DAMPER, FORM HULE DE FORMA	1	1	1			
13	90387–06119	COLLAR ESPACIADOR	1	1	1			
14	6A0–82317–00	DAMPER, IGNITION COIL AMORTIGUADOR BOBINA ENCENDIDO	2	2	2			
15	95895–06030	BOLT, FLANGE TORNILLO DE REBORDE	1	1	1			
16	90480–12314	GROMMET TAPON	2	2	2			
17	6EK–8132G–00	PLATE PLACA	1	1	1			
18	95895–06016	BOLT, FLANGE TORNILLO DE REBORDE	1	1	1			
19	90480–06M19	GROMMET TAPON	1	1	1			
20	6EK–83626–00	MARK 6 MARCA 6	1	1	1			
21	6EK–13437–61	MARK, CAUTION MARKER	1	1	1			EXCEPT FOR BRA EXCEPT FOR BRA
22	6EE–81994–40	LABEL, SAFETY ETIQUETA DE SEGURIDAD	1	1	1			EXCEPT FOR BRA EXCEPT FOR BRA
23	6EE–81994–50	LABEL, SAFETY ETIQUETA DE SEGURIDAD	1		1			FOR CAR FOR CAR
	6AH–81994–70	LABEL, SAFETY ETIQUETA DE SEGURIDAD	1		1			FOR BRA FOR BRA

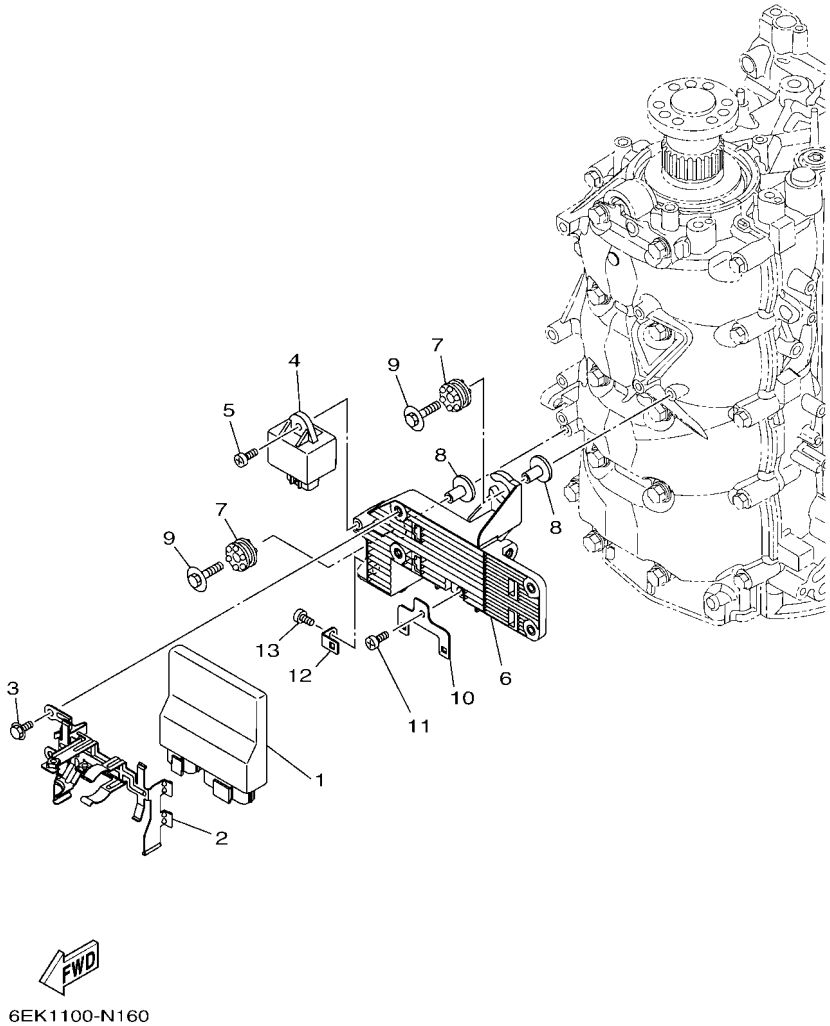

FIG. 16 ELECTRICAL 1 — EQUIPO ELECTRICO 1

REF. NO.	PART NO. CODIGO Nº	DESCRIPTION DESCRIPCION	ET	EHT	6EL4			REMARKS OBSERVACIONES
1	6EK–8591A–01	ENGINE CONTROL UNIT ASSY UNIDAD CONTROL	1	1	1			EXCEPT FOR BRA EXCEPT FOR BRA
	6EK–8591A–11	ENGINE CONTROL UNIT ASSY UNIDAD CONTROL	1		1			FOR BRA FOR BRA
2	6EK–8253C–00	SPRING, PLATE LOCK RESORTE, PLACA DE CIERRE	1	1	1			
3	95895–06010	BOLT, FLANGE TORNILLO DE REBORDE	2	2	2			
4	60E–81950–00	RELAY ASSY RELE COMPLETO	1	1	1			
5	97780–60620	SCREW, TAPPING TORNILLO DE CABEZA DE CONO ACH	1	1	1			
6	6EK–81948–00	BRACKET SOPORTE	1	1	1			
7	68F–85516–01	SPACER ESPACIADOR	2	2	2			
8	90387–06176	COLLAR ESPACIADOR	2	2	2			
9	68F–85119–00	BOLT PERNO	2	2	2			
10	6C5–8257V–00	PLATE, CONNECTOR PLACA DE CONECTOR	1	1	1			
11	97780–60620	SCREW, TAPPING TORNILLO DE CABEZA DE CONO ACH	1	1	1			
12	68V–85548–01	HOLDER SOSTEN	1	1	1			
13	97780–60620	SCREW, TAPPING TORNILLO DE CABEZA DE CONO ACH	1	1	1			

FIG. 17 ELECTRICAL 2 — EQUIPO ELECTRICO 2

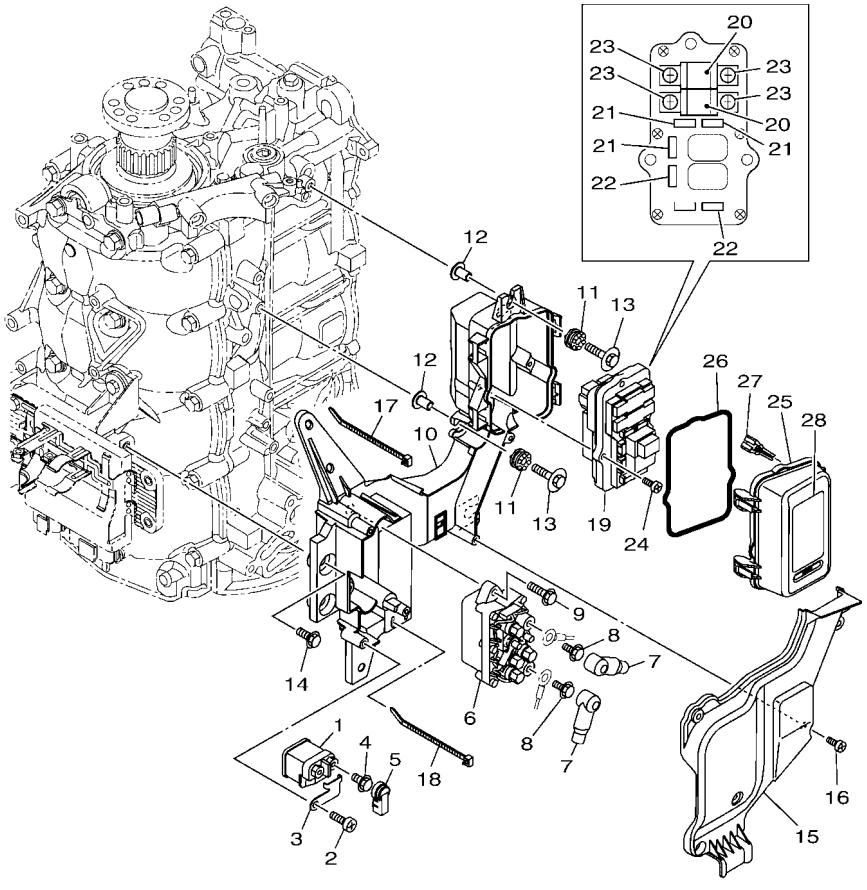

6EK4100-R170

REF. NO.	PART NO. CODIGO Nº	DESCRIPTION DESCRIPCION	ET	EHT	6EL4			REMARKS OBSERVACIONES
1	68V–8194A–00	RELAY RELE	1	1	1			
2	97780–60620	SCREW, TAPPING TORNILLO DE CABEZA DE CONO ACH	1	1	1			
3	68V–81953–00	STAY, RELAY SOPORTE DE RELE	1	1	1			
4	97595–06610	BOLT, WITH WASHER PERNO CON ARANDELA	2	2	2			
5	6P2–8183X–00	CAP, TERMINAL CUBIERTA DE TERMINAL	2	2	2			
6	63P–81950–00	RELAY ASSY RELE COMPLETO	1	1	1			
7	682–82119–01	COVER, LEAD WIRE CUBIERTA DE CABLE CONDUCTOR	2	2	2			
8	97595–06610	BOLT, WITH WASHER PERNO CON ARANDELA	2	2	2			
9	97595–06520	BOLT, WITH WASHER PERNO CON ARANDELA	2	2	2			
10	6EK–81952–00	HOLDER, RELAY SOSTEN DE RELE	1	1	1			
11	64J–85516–00	SPACER ESPACIADOR	4	4	4			
12	69M–42758–01	COLLAR COLLAR	4	4	4			
13	90119–06M56	BOLT, WITH WASHER TORNILLO CON ARANDELA	4	4	4			
14	95895–06016	BOLT, FLANGE TORNILLO DE REBORDE	2	2	2			
15	6EM–81942–00	COVER CUBIERTA	1	1	1			
16	90169–05M00	SCREW, TRUSS HEAD TAPPING TORNILLO	4	4	4			
17	90465–13M18	CLAMP BRIDA	2	2	2			
18	90465–13M18	CLAMP BRIDA	1	1	1			
19	6EK–82170–02	FUSE BOX ASSY CAJA DE FUSIBLES COMPL.	1	1	1			
20	63P–82151–00	.FUSE (50A) .FUSIBLE (50A)	2	2	2			
21	67F–82151–00	.FUSE (20A) .FUSIBLE (20A)	3	3	3			
22	67F–82151–10	.FUSE (30A) .FUSIBLE (30A)	2	2	2			
23	68F–82846–00	.SCREW, PAN HEAD (M5) .TORNILLO (M5)	4	4	4			
24	97780–50620	SCREW, TAPPING TORNILLO DE CABEZA DE CONO ACH	3	3	3			
25	6EM–85544–00	CASE CAJA	1	1	1			
26	68F–82176–00	DAMPER AMORTIGUADOR	1	1	1			
27	67F–2812A–00	PULLER, FUSE TIRADOR DE FUSIBLE	1	1	1			

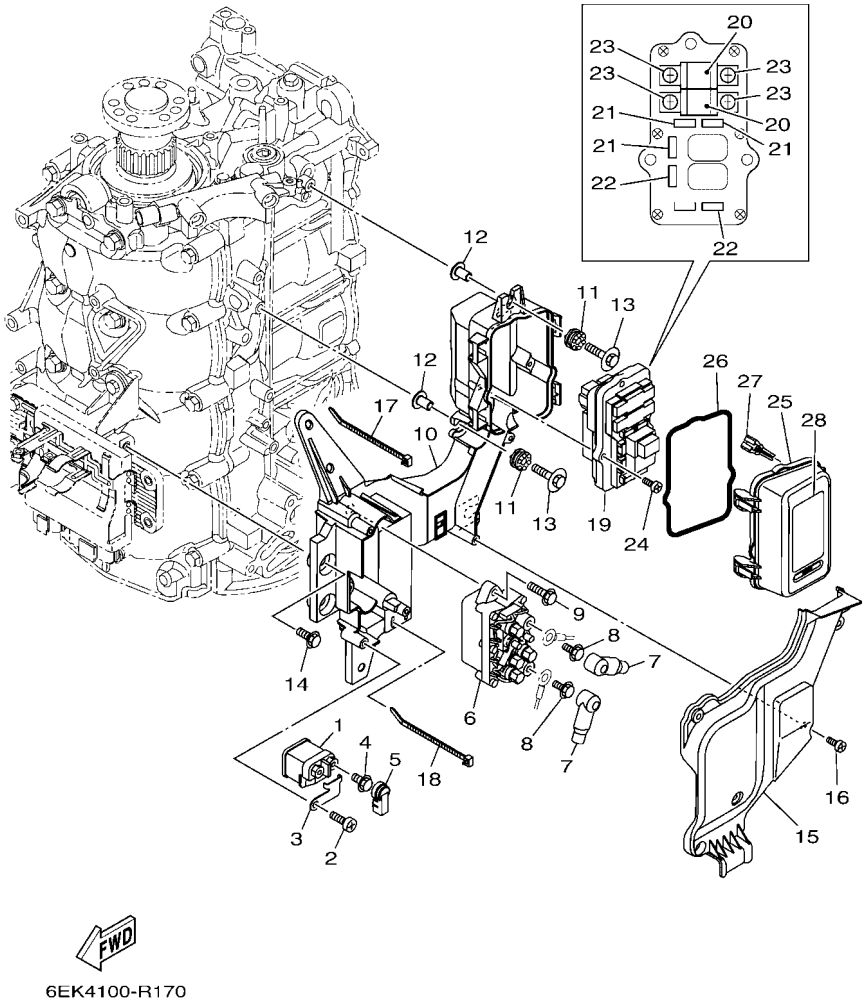

FIG. 17 ELECTRICAL 2 — EQUIPO ELECTRICO 2

REF. NO.	PART NO. CODIGO Nº	DESCRIPTION DESCRIPCION	ET	EHT	6EL4			REMARKS OBSERVACIONES
28	6EK–81919–01	GRAPHIC, REGULATOR CALCAMONIA DE REGULADOR	1	1	1			

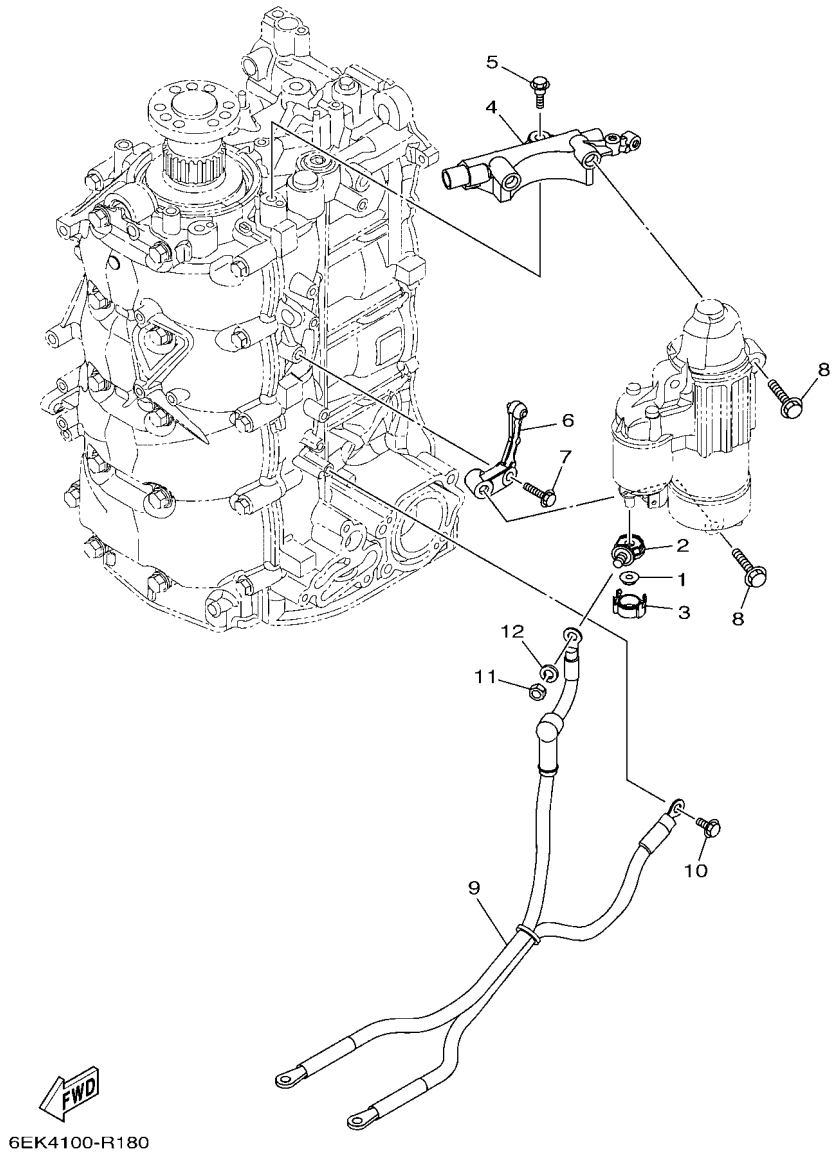

FIG. 18 ELECTRICAL 3 — EQUIPO ELECTRICO 3

REF. NO.	PART NO. CODIGO Nº	DESCRIPTION DESCRIPCION	ET	EHT	6EL4			REMARKS OBSERVACIONES
1	90179–08003	NUT TUERCA	1	1	1			
2	60V–81925–00	TERMINAL TERMINAL	1	1	1			
3	68F–82582–00	COVER, WIRE HARNESS CUBIERTA DE ARNES DE CABLE	1	1	1			
4	6EK–81822–01	BRACKET, STARTING MOTOR SOPORTE DE MOTOR DE ARRANQUE	1	1	1			
5	90109–08240	BOLT PERNO	2	2	2			
6	6EK–81823–00	STAY, STARTING MOTOR SUPORTE	1	1	1			
7	95812–08030	BOLT, FLANGE TORNILLO DE REBORDE	1	1	1			
8	90105–08248	BOLT, FLANGE TORNILLO	3	3	3			
9	68V–82105–01	BATTERY CABLE CABLE DE BATERIA	1	1	1			AP AP
10	90105–06M14	BOLT FLANGE TORNILLO	1	1	1			AP AP
11	95333–08600	NUT TUERCA	1	1	1			AP AP
12	92903–08100	WASHER, SPRING RONDANA SENCILLA	1	1	1			AP AP

FIG. 19 ELECTRICAL 4 — EQUIPO ELECTRICO 4

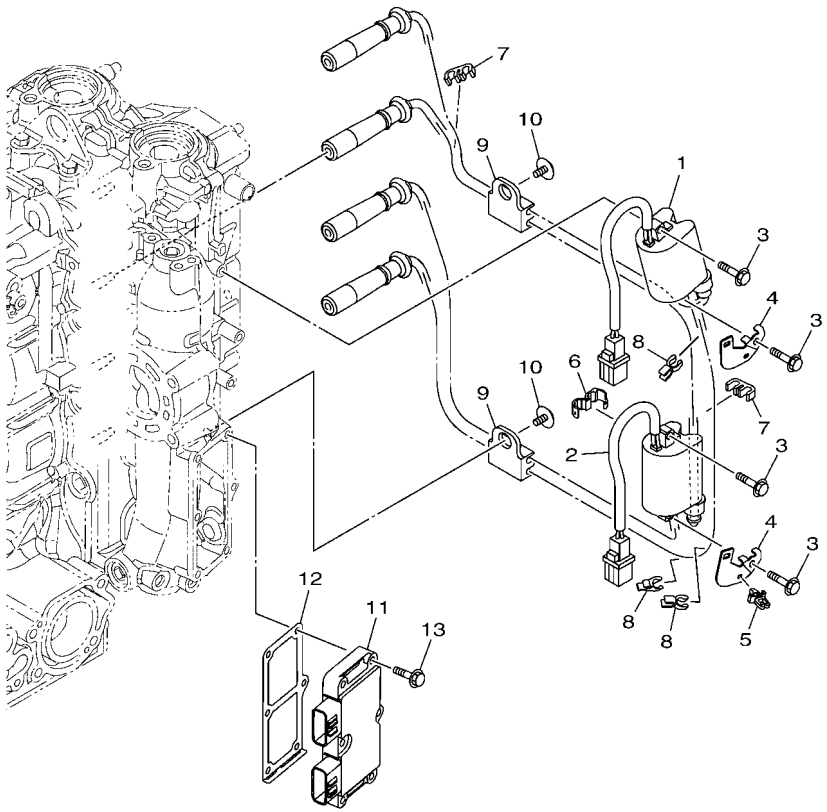

6EK4100-R190

REF. NO.	PART NO. CODIGO Nº	DESCRIPTION DESCRIPCION	ET	EHT	6EL4			REMARKS OBSERVACIONES
1	68V–82310–01	IGNITION COIL ASSY BOBINA DE ENCENDIDO COMPLETA	1	1	1			
2	68V–82310–11	IGNITION COIL ASSY BOBINA DE ENCENDIDO COMPLETA	1	1	1			
3	97595–06525	BOLT, WITH WASHER PERNO CON ARANDELA	4	4	4			
4	6EK–82388–00	PLATE PLACA	2	2	2			
5	90464–06001	CLAMP BRIDA	1	1	1			
6	90464–13227	CLAMP BRIDA	1	1	1			
7	67F–82361–00	CLAMP, CORD GRAMPA DE CABLE	2	2	2			
8	90464–07M41	CLAMP BRIDA	3	3	3			
9	67F–82362–00	CLAMP, CORD 2 GRAMPA DE CABLE 2	2	2	2			
10	90119–06M09	BOLT, WITH WASHER TORNILLO CON ARANDELA	2	2	2			
11	6EK–81960–02	RECTIFIER & REGULATOR ASSY RECTIFICADOR Y REGULADOR	1	1	1			
12	6EK–81975–01	PLATE, RECTIFIER FITTING PLACA ACCESORIA RECTIF.	1	1	1			
13	97595–06530	BOLT, WITH WASHER PERNO CON ARANDELA	6	6	6			

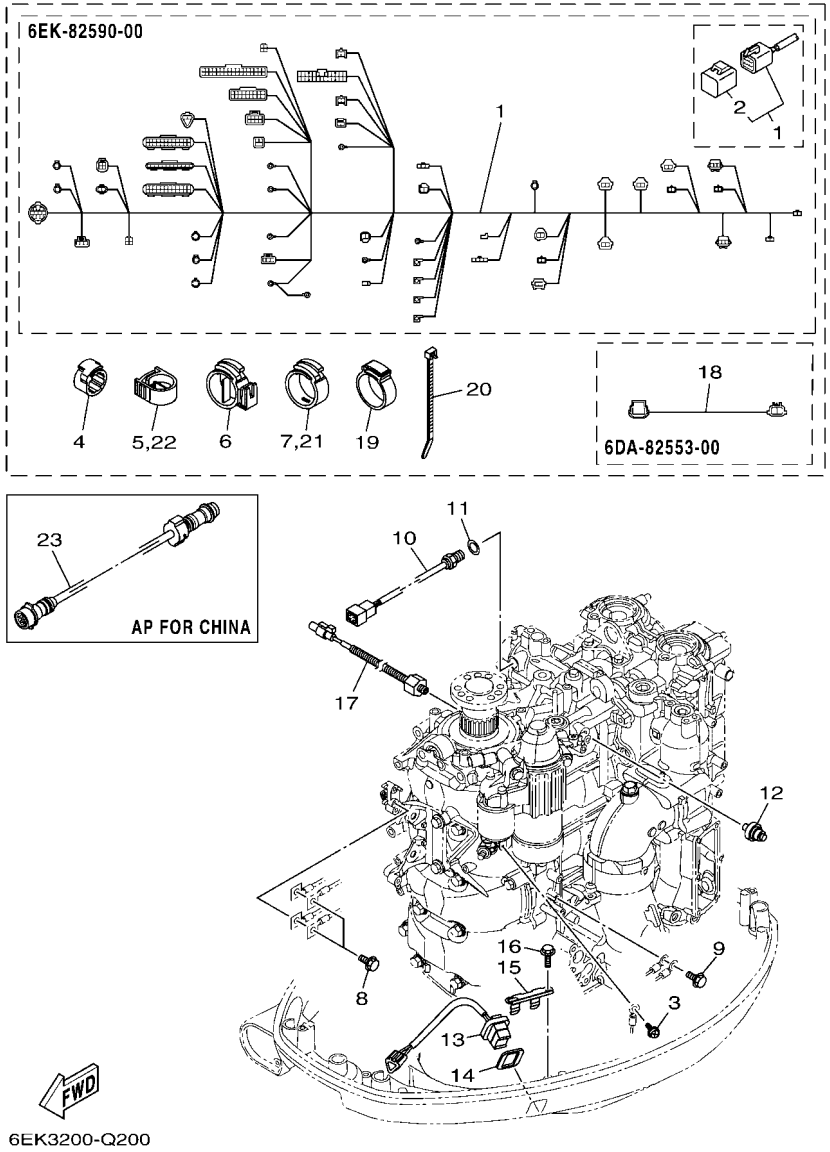

FIG. 20 ELECTRICAL 5 — EQUIPO ELECTRICO 5

REF. NO.	PART NO. CODIGO Nº	DESCRIPTION DESCRIPCION	ET	EHT	6EL4			REMARKS OBSERVACIONES
1	6EK–82590–00	WIRE HARNESS ASSY CONJUNTO DE CABLES	1	1	1			
2	6Y8–82582–11	.CAP 1 (4PIN) .CUBIERTA DE ARNES DE CABLE	1	1	1			
3	97985–04308	SCREW, WITH WASHER TORNILLO, CON ARANDELA	1	1	1			
4	90464–13227	CLAMP BRIDA	1	1	1			
5	90464–18004	CLAMP BRIDA	1	1	1			
6	90464–22005	CLAMP BRIDA	1	1	1			
7	90464–16001	CLAMP BRIDA	1	1	1			
8	97595–06516	BOLT, WITH WASHER PERNO CON ARANDELA	2	2	2			
9	97595–06516	BOLT, WITH WASHER PERNO CON ARANDELA	1	1	1			
10	6CJ–85790–00	THERMOSENSOR ASSY TERMICA SENSORIO	1	1	1			
11	90430–14115	GASKET JUNTA	1	1	1			
12	68V–82504–00	OIL PRESSURE SWITCH ASSY INTERRUPTOR PRESION DE ACEITE	1	1	1			
13	69J–82563–01	TRIM & TILT SWITCH ASSY INTERRUPTOR DE INCLINACION	1	1	1			
14	69J–82587–00	GASKET EMPAQUETADURA	1	1	1			
15	69J–83614–00	BRACKET SOPORTE	1	1	1			
16	90109–06M86	BOLT PERNO	2	2	2			
17	6CJ–85780–00	SENSOR, KNOCK CHOCAR SENSORIO	1	1	1			
18	6DA–82553–00	EXTENSION, WIRE LEAD CABLE	1	1	1			
19	90464–26001	CLAMP BRIDA	1	1	1			
20	90465–13M18	CLAMP BRIDA	1	1	1			
21	90464–16001	CLAMP BRIDA	1	1	1			
22	90464–18004	CLAMP BRIDA	1	1	1			
23	688–8258A–30	EXTENSION, WIRE HARNESS (3M) EXTENSION, ARNES DE CABLES (3M	1					AP FOR CHN (10P) AP FOR CHN (10P)

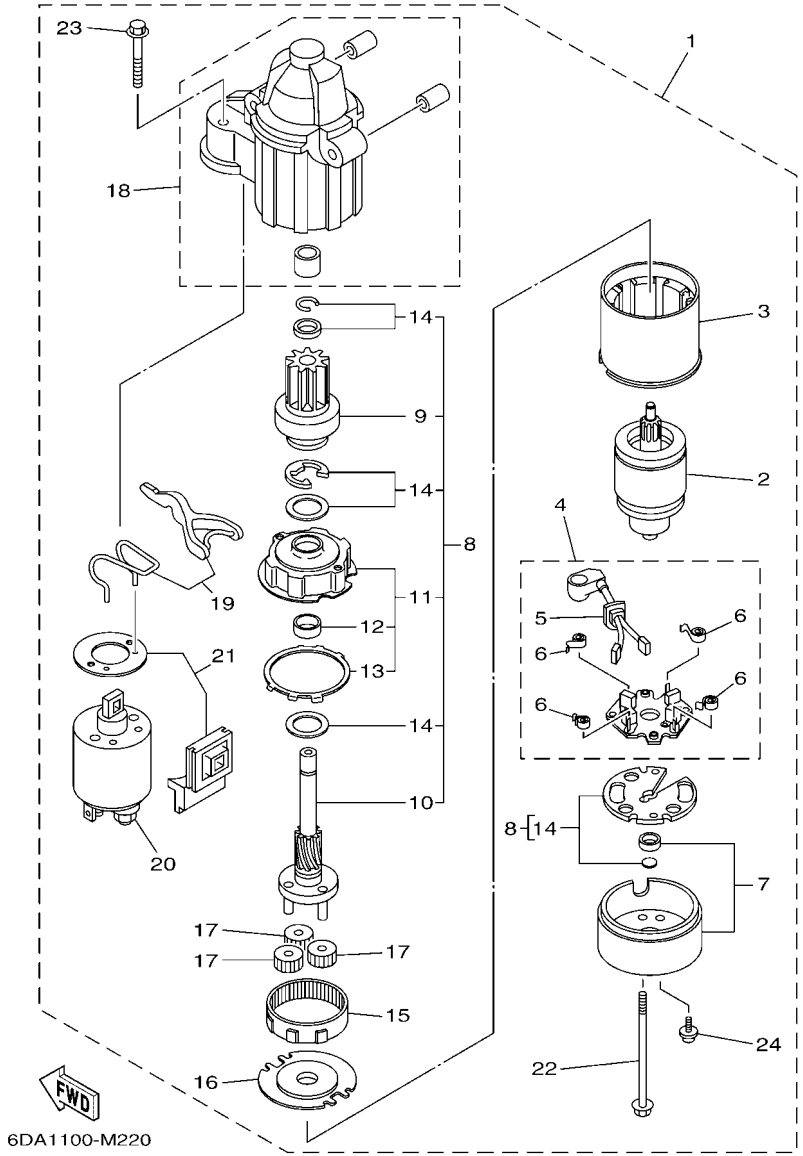

FIG. 21 STARTING MOTOR — MOTOR DE ARRANQUE

REF. NO.	PART NO. CODIGO Nº	DESCRIPTION DESCRIPCION	ET	EHT	6EL4			REMARKS OBSERVACIONES
1	6EM–81800–00	STARTING MOTOR ASSY MOTOR DE ARRANQUE COMPLETO	1	1	1			
2	67F–81850–00	.ARMATURE ASSY .INDUCIDO COMPLETO	1	1	1			
3	67F–81810–00	.STATOR ASSY .ESTATOR COMPLETO	1	1	1			
4	69J–81840–10	.BRUSH HOLDER ASSY .SOSTEN DE ESCOBILLA COMPLETO	1	1	1			
5	69J–81801–10	..BRUSH SET ..JUEGO DE ESCOBILLA	1	1	1			
6	67F–81813–00	..SPRING, BRUSH ..RESORTE DE ESCOBILLA	4	4	4			
7	6CB–81820–00	.REAR BRACKET ASSY .CUBIERTA TRASERA COMPL	1	1	1			
8	6CB–81807–00	.GEAR ASSY, STARTING MOTOR .PINON CONJUNTO	1	1	1			
9	6CB–81832–00	..CLUTCH, OVER RUN ..PINON COMPL	1	1	1			
10	6CB–81836–00	..SHAFT, PINION ..ARBOL, PINON	1	1	1			
11	67F–81821–00	..BRACKET, CENTER 1 ..SOPORTE, CENTRO 1	1	1	1			
12	67F–81841–00	...BEARING ...PORTADOR	1	1	1			
13	67F–8183R–00	...GASKET ...EMPAQUETADURA	1	1	1			
14	6CB–81809–00	..WASHER KIT ..JUEGO DE ARANDELA	1	1	1			
15	67F–81891–00	.GEAR, RING .ENGRANAJE ANILLO	1	1	1			WITH 67F-8183R-00 WITH 67F-8183R-00
16	67F–81830–00	.BRACKET, CENTER 2 .SOPORTE, CENTRO 2	1	1	1			
17	60V–8183T–00	.GEAR, IDLER .ENGRENAJE NEUTRO	3	3	3			
18	6CB–81842–00	.COVER .TAPA	1	1	1			
19	6C5–81839–00	.LEVER ASSY .PALANCA COMPL.	1	1	1			
20	6EM–81941–00	.STARTER RELAY ASSY .RELE DE ARRANQUE	1	1	1			
21	6C5–81869–00	.COVER, DUST .CUBIERTA PARA POLVO	1	1	1			
22	6CB–81826–00	.BOLT .PERNO	2	2	2			
23	69J–81828–00	.SCREW 2 .TORNILLO DE EMPUJE 2	2	2	2			
24	67F–81846–00	.SCREW .TORNILLO	2	2	2			

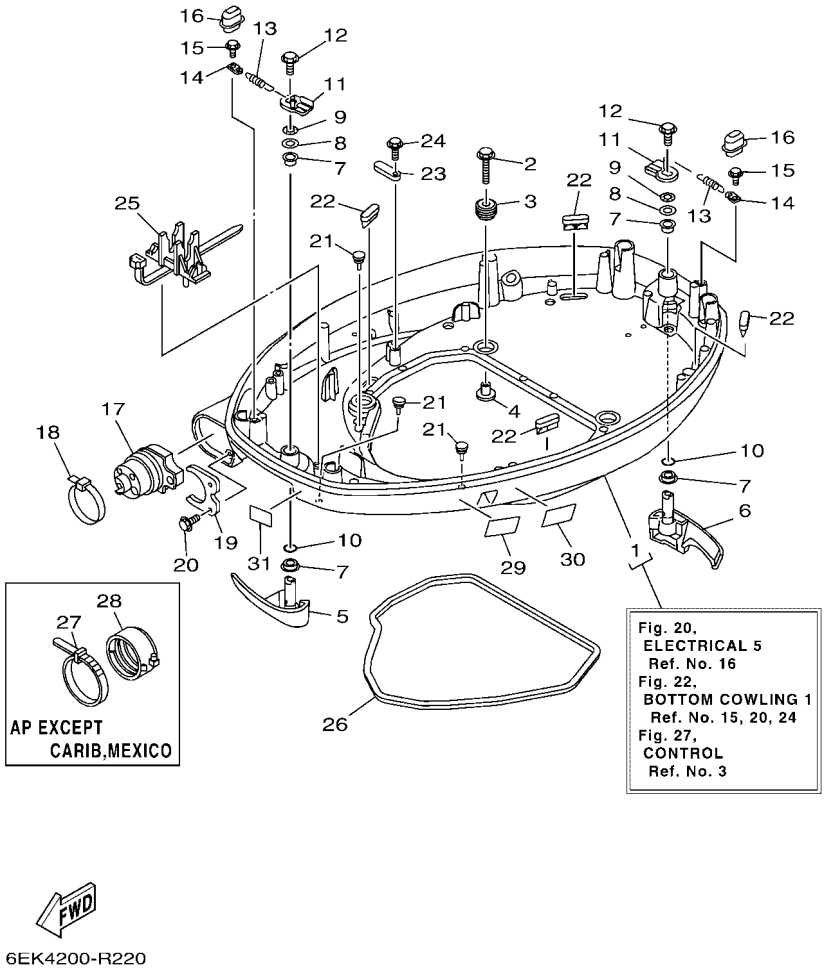

FIG. 22 BOTTOM COWLING 1 — CUBIERTA INFERIOR 1

REF. NO.	PART NO. CODIGO Nº	DESCRIPTION DESCRIPCION	ET	EHT	6EL4			REMARKS OBSERVACIONES
1	6EK–42710–00	BOTTOM COWLING ASSY CUBIERTA INFERIOR COMPL.	1	1	1			
2	90119–08M22	BOLT, WITH WASHER TORNILLO CON ARANDELA	4	4	4			
3	90480–22M15	GROMMET TAPON	4	4	4			
4	90387–08M37	COLLAR ESPACIADOR	4	4	4			
5	6EK–42815–01–8D	LEVER, CLAMP 1 PALANCA ABRAZADERA 1	1	1	1			
6	6EK–42816–01–8D	LEVER, CLAMP 2 PALANCA ABRAZADERA 2	1	1	1			
7	90386–15M73	BUSH BUJE	4	4	4			
8	90201–156J2	WASHER, PLATE ARANDELA PLANA	2	2	2			
9	90206–15M18	WASHER, WAVE ARANDELA ONDULADA	2	2	2			
10	93210–13M63	O-RING ANILLO O	2	2	2			
11	6CB–42818–00	LEVER, CLAMP 4 PALANCA, ABRAZADERA 4	2	2	2			
12	95895–08012	BOLT, FLANGE TORNILLO DE REBORDE	2	2	2			
13	90506–22001	SPRING, TENSION RESORTE DE TENSION	2	2	2			
14	66T–43144–00	HOOK, SPRING GANCHO	2	2	2			
15	90109–06M86	BOLT PERNO	2	2	2			
16	6EK–42728–00	CAP TAPA	2	2	2			
17	6EK–42725–00	GROMMET TAPON	1	1	1			
18	90465–13M30	CLAMP BRIDA	1	1	1			FOR CAR,MEX FOR CAR,MEX
19	6CB–42761–00	STOPPER RETEN 1	1	1	1			
20	90109–06M86	BOLT PERNO	2	2	2			
21	6H4–42748–00	GROMMET TAPON	3	3	3			
22	67F–42717–00	RUBBER, SEAL 2 GOMA	4	4	4			
23	6E5–82588–00	PLATE PLACA	1	1	1			
24	90109–06M81	BOLT PERNO	1	1	1			
25	68V–82594–00	CLAMP GRAMPA	1	1	1			
26	6EK–42716–00	RUBBER SEAL 1 SELLO DE GOMA 1	1	1	1			
27	90464–20258	CLAMP BRIDA	1		1			AP EXCEPT CAR,MEX AP EXCEPT CAR,MEX

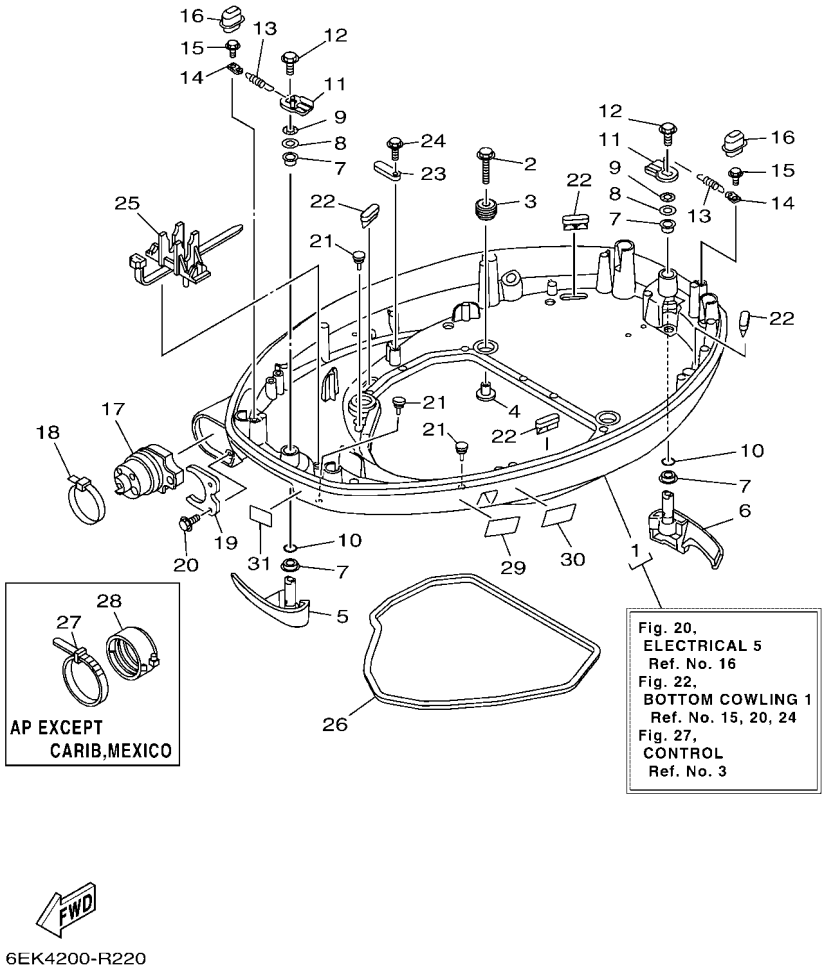

FIG. 22 BOTTOM COWLING 1 — CUBIERTA INFERIOR 1

REF. NO.	PART NO. CODIGO Nº	DESCRIPTION DESCRIPCION	ET	EHT	6EL4			REMARKS OBSERVACIONES
28	68F–42753–00	FASTNER TIRADOR	1		1			AP EXCEPT CAR,MEX AP EXCEPT CAR,MEX
29	6EE–42794–40	LABEL, WARNING (GENERAL) ETIQUETA DE PRECAUCION	1	1	1			EXCEPT BRA EXCEPT BRA
	6AH–42794–70	LABEL, WARNING (GENERAL) ETIQUETA DE PRECAUCION	1		1			FOR BRA FOR BRA
30	6EE–42794–50	LABEL, WARNING (GENERAL) ETIQUETA DE PRECAUCION	1		1			FOR CAR FOR CAR
31	6AH–81996–00	MARK MARCA	1		1			FOR CAR FOR CAR

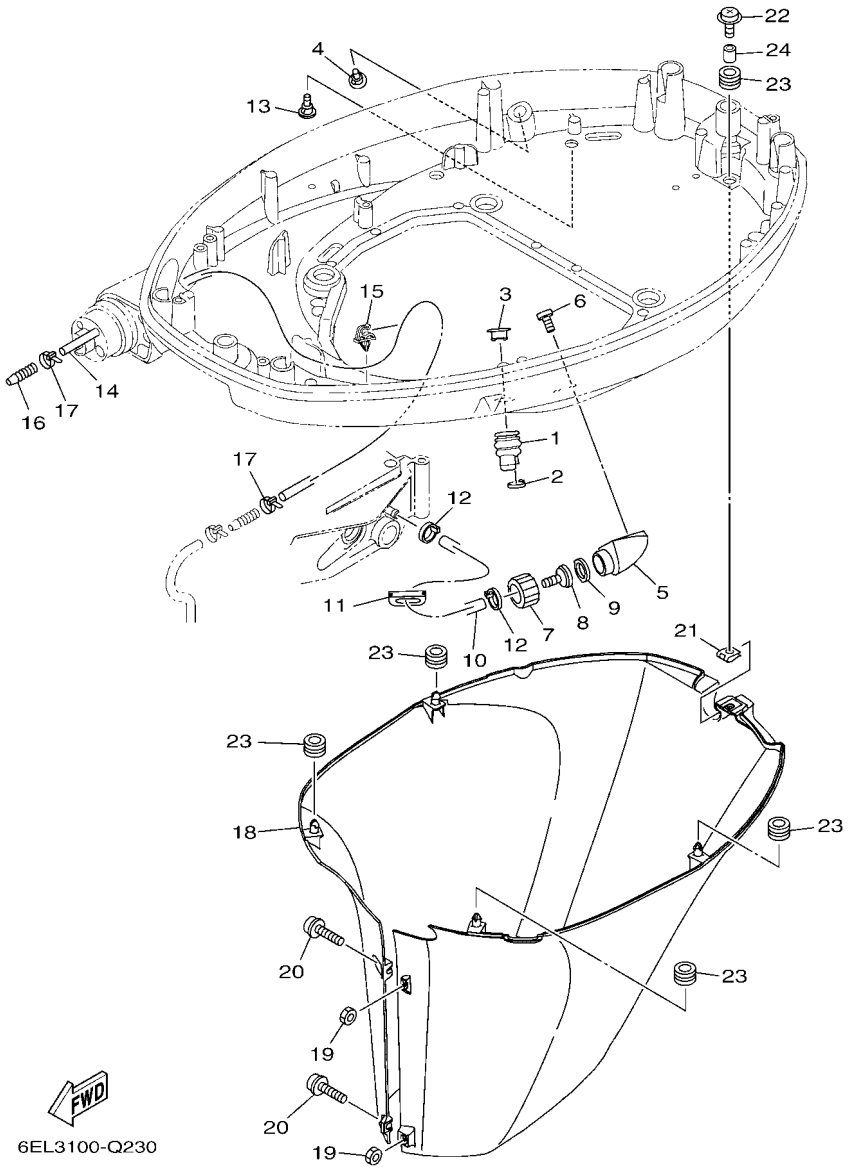

FIG. 23 BOTTOM COWLING 2 — CUBIERTA INFERIOR 2

REF. NO.	PART NO. CODIGO Nº	DESCRIPTION DESCRIPCION	ET	EHT	6EL4			REMARKS OBSERVACIONES
1	6H1–42726–30	GROMMET TAPON	1	1	1			
2	90465–11M10	CLAMP BRIDA	1	1	1			
3	6BG–42384–00	SEAL, CAP SELLO DE TAPA	1	1	1			
4	6P2–44391–00	NIPPLE, HOSE NIPLE MANGUERA	1	1	1			
5	6AW–12572–00	ADAPTER ADAPTADOR	1	1	1			
6	97780–60520	SCREW, TAPPING TORNILLO DE CABEZA DE CONO ACH	2	2	2			
7	6R3–12581–00	JOINT, HOSE 1 CONEXION	1	1	1			
8	6R3–12582–00	JOINT, HOSE 2 CONEXION	1	1	1			
9	6R3–12583–00	GASKET, HOSE JOINT EMPAQUETADURA JUNTA DE MANGUE	1	1	1			
10	6EK–42541–00	PIPE 1 TUBO 1	1	1	1			
11	6AH–42726–00	GROMMET TAPON	1	1	1			
12	90465–11M10	CLAMP BRIDA	2	2	2			
13	6P2–44391–00	NIPPLE, HOSE NIPLE MANGUERA	1	1	1			
14	90445–073F9	HOSE (L1200) TUBO (L1200)	1	1	1			
15	90464–07259	CLAMP BRIDA	1	1	1			
16	6E5–83558–00	END, NIPPLE EXTREMO DE NIPLE	1	1	1			
17	90465–11M10	CLAMP BRIDA	2	2	2			
18	6EK–42741–00–8D	APRON MANDIL	1	1	1			
19	95380–06600	NUT, HEXAGON TUERCA	2	2	2			
20	90159–06M28	SCREW, WITH WASHER TORNILLO CON VALONA	2	2	2			
21	90183–061A8	NUT, SPRING TUERCA DE RESORTE	1	1	1			
22	90159–06053	SCREW, WITH WASHER TORNILLO CON VALONA	1	1	1			
23	90480–13M24	GROMMET TAPON	5	5	5			
24	90387–06M43	COLLAR ESPACIADOR	1	1	1			

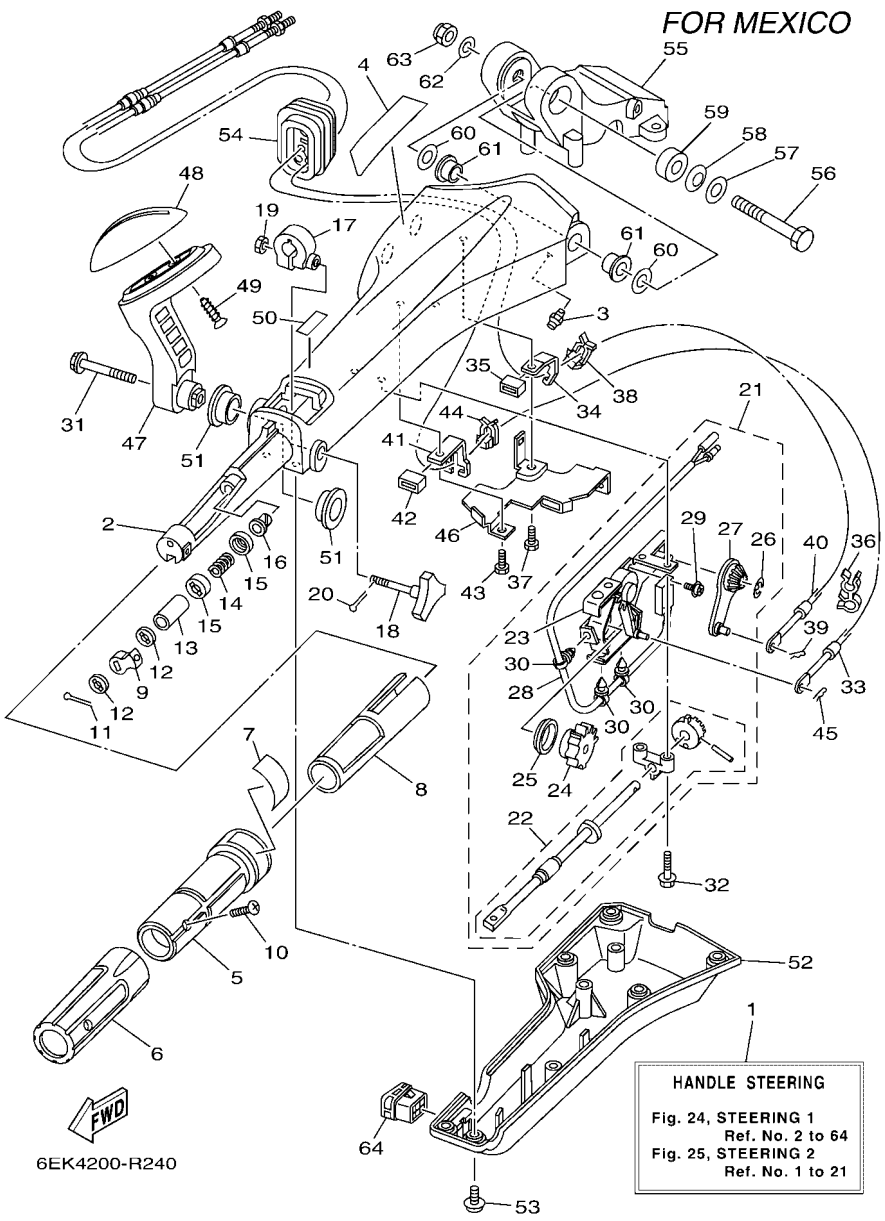

FIG. 24 STEERING 1 — DIRECCION 1

REF. NO.	PART NO. CODIGO Nº	DESCRIPTION DESCRIPCION	ET	EHT	6EL4			REMARKS OBSERVACIONES
1	6BC–42101–40	HANDLE, STEERING MANIJA DE DIRECCION		1				
2	6X4–42111–02–8D	HANDLE, STEERING MANIJA DE DIRECCION		1				
3	93700–06M03	NIPPLE, GREASE BOQUILLA DE ENGRASAR		1				
4	6X4–48215–00	GRAPHIC CALCOMANIA 1		1				
5	6X4–42119–01	GRIP, STEERING HANDLE MANGO, MANIJA DE DIRRECCION		1				
6	6X4–42177–00	RUBBER, HANDLE HULE DE MANIJA		1				
7	6X4–42137–00	INDICATOR, THROTTLE INDICADOR ACELERADOR		1				
8	6X4–41291–00	BUSHING BUJE		1				
9	6X4–44139–01	COLLAR COLLAR		1				
10	90152–05007	SCREW, COUNTERSUNK TORNILLO EMBUTIDO		1				
11	91490–20010	PIN. COTTER CHAVETA		1				
12	6X4–44177–00	WASHER RONDANA		2				
13	6X4–42128–00	COLLAR, DISTANCE 1 COLLAR DISTANCIADOR 1		1				
14	90501–23215	SPRING, COMPRESSION RESORTE DE COMPRESION		1				
15	6X4–44188–00	WASHER ARANDELLA		2				
16	90386–08032	BUSH BUJE		1				
17	63D–42126–00	FRICTION, STEERING HANDLE GRIP FRICCION DE MANGO DIRECCION		1				
18	6X4–48154–00	KNOB, THROTTLE PERILLA DE ACELERADOR		1				
19	95380–06600	NUT, HEXAGON TUERCA		1				
20	91490–20010	PIN. COTTER CHAVETA		1				
21	6X4–44100–01	SHIFT LINK ASSY ESLABON DE SLECTOR COMPLETO		1				
22	6X4–42115–00	.SHAFT, STEERING HANDLE .EJE MANIJA DE DIRECCION		1				
23	6X4–44102–00	.SHIFT ASSIST ASSY. .SELECTOR DE ASISTIR		1				
24	6X4–47731–01	.GEAR, DRIVE .ENGRANAJE DE TRACCION		1				
25	6X4–44132–00	.BUSHING .BUJE		1				
26	6X4–14137–00	.CLIP .PRESILLA		1				
27	6X4–48261–00	.ARM, THROTTLE .BRAZO ACELERADOR		1				

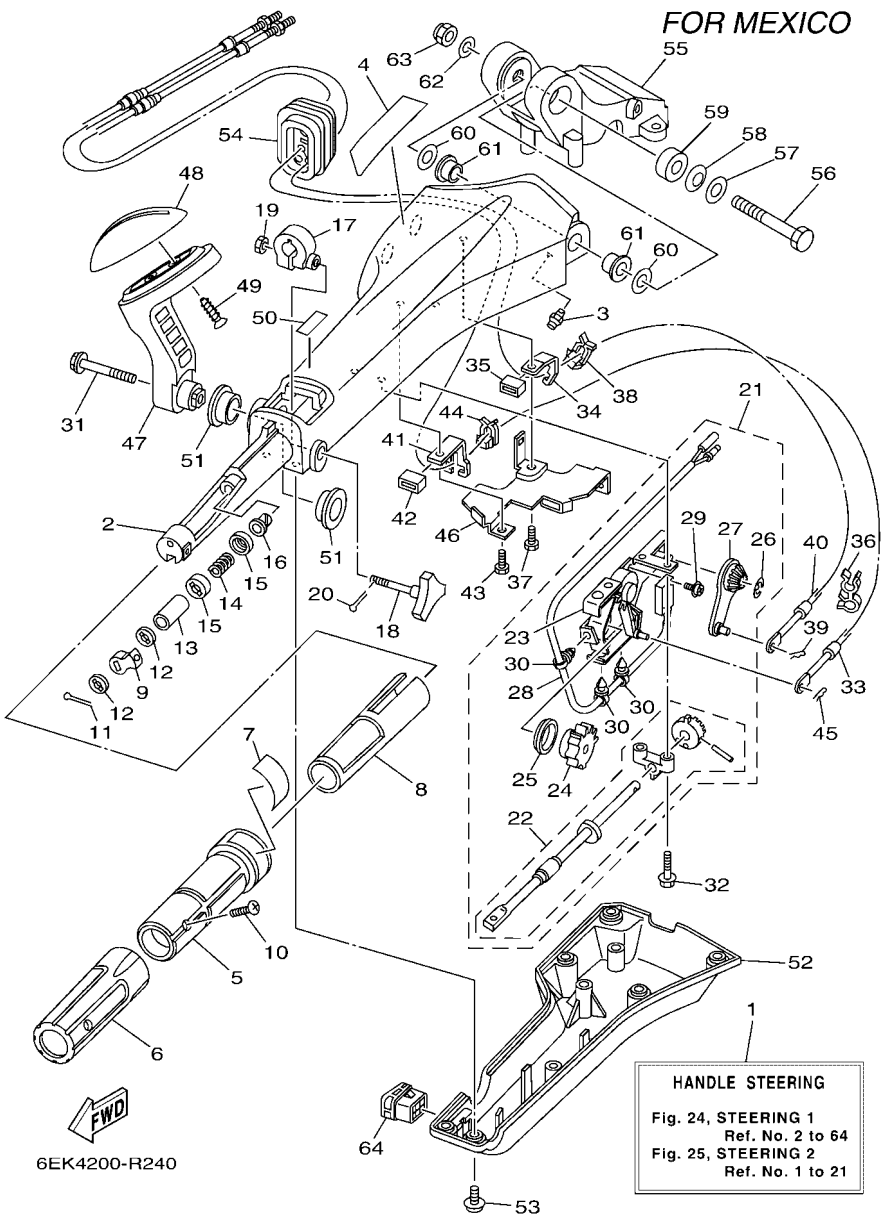

FIG. 24 STEERING 1 — DIRECCION 1

REF. NO.	PART NO. CODIGO Nº	DESCRIPTION DESCRIPCION	ET	EHT	6EL4			REMARKS OBSERVACIONES
28	6X4–82540–00	.NEUTRAL SWITCH ASSY .INTERRUPTOR NEUTRAL COMPL		1				
29	703–48129–00	.SCREW 3 .TORNILLO 3		2				
30	6X4–42821–00	.BAND, CLAMP .BRIDA DE CINTA		3				
31	97595–08540	BOLT, WITH WASHER PERNO CON ARANDELA		1				
32	97595–06530	BOLT, WITH WASHER PERNO CON ARANDELA		2				
33	6EK–48321–00	CABLE CABLE CONTROL REMOTO		1				
34	6X4–48538–00	CLAMP, CABLE 1 GRAMPA DE CABLE		1				
35	6X4–26367–00	PROTECTOR ACCESORIA		1				
36	90464–09M42	CLAMP BRIDA		1				
37	97095–06014	BOLT PERNO		1				
38	63D–48538–00	CLAMP, CABLE 1 GRAMPA DE CABLE		1				
39	90468–10005	CLIP PRESILLA		1				
40	6EK–26301–00	THROTTLE CABLE ASSY CABLE DE ACELERADOR COMPLETO		1				
41	6X4–48538–10	CLAMP, CABLE 1 GRAMPA DE CABLE		1				
42	6X4–26367–00	PROTECTOR ACCESORIA		1				
43	97095–06014	BOLT PERNO		1				
44	63D–48538–00	CLAMP, CABLE 1 GRAMPA DE CABLE		1				
45	90468–10005	CLIP PRESILLA		1				
46	6X4–42159–00	STAY SOPORTE		1				
47	6X4–44159–00–8D	HANDLE, GEAR SHIFT MANIJA DE CAMBIO DE MARCHAS		1				
48	6X4–44173–00	LEVER, SHIFT CONTROL PALANCA CONTROL CAMBIOS		1				
49	97780–60920	SCREW, TAPPING TORNILLO DE CABEZA DE CONO ACH		2				
50	6X3–44191–00	INDICATOR, SHIFT INDICADOR DE CAMBIOS		1				
51	90386–26MA3	BUSH BUJE		2				
52	6X4–42131–11	COVER, HANDLE STEERING CUBIERTA MANIJA DIRRECCION		1				
53	97985–06216	SCREW, WITH WASHER TORNILLO, CON ARANDELA		6				
54	6X4–42725–01	GROMMET TAPON		1				

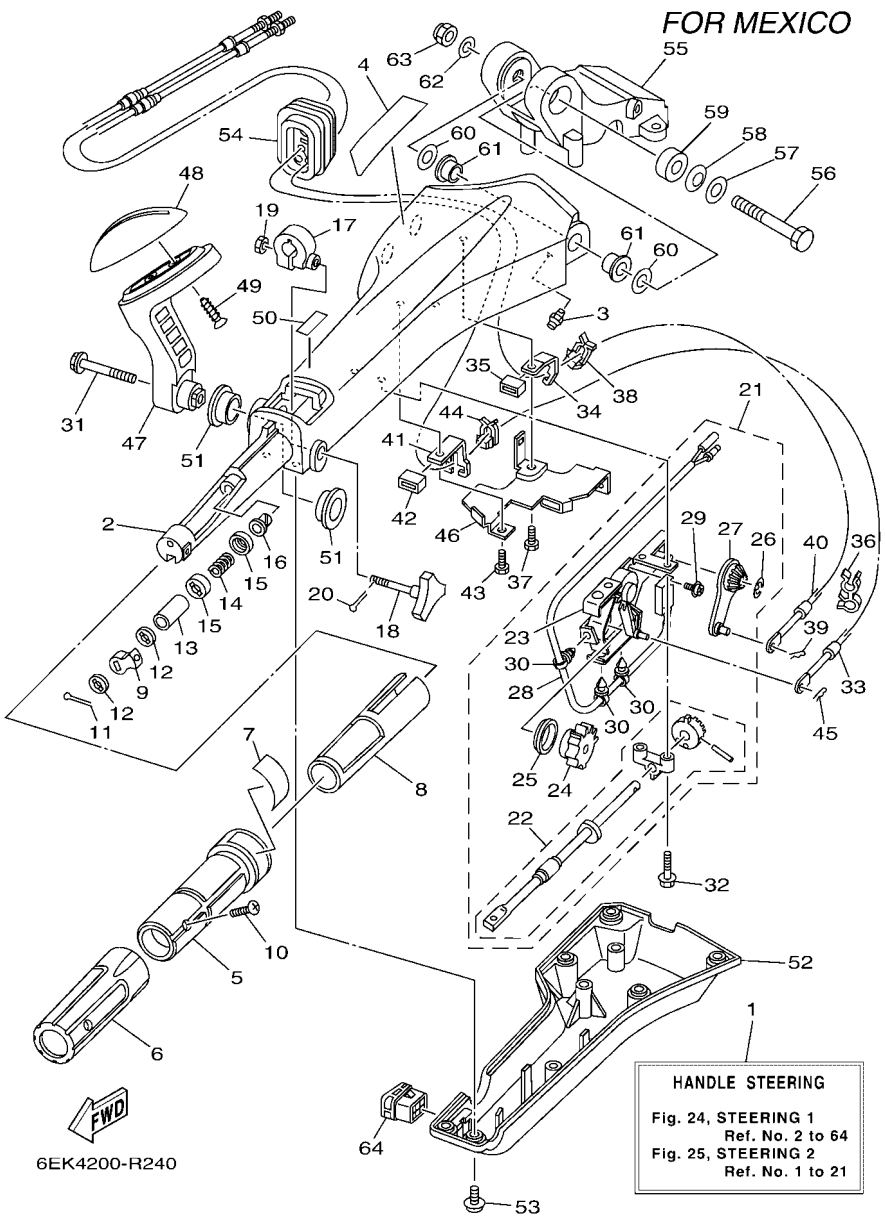

FIG. 24 STEERING 1 — DIRECCION 1

REF. NO.	PART NO. CODIGO Nº	DESCRIPTION DESCRIPCION	ET	EHT	6EL4			REMARKS OBSERVACIONES
55	63D–42121–22–8D	BRACKET SOPORTE		1				
56	90101–12014	BOLT TORNILLO		1				
57	92990–12200	WASHER, PLAIN ARANDELA PLANA		1				
58	90206–12M22	WASHER, WAVE ARANDELA ONDULADA		1				
59	90387–12M02	COLLAR ESPACIADOR		1				
60	90201–12035	WASHER, PLATE ARANDELA PLANA		2				
61	90386–12003	BUSH BUJE		2				
62	92990–12600	WASHER, PLATE ARANDELA PLANA		1				
63	90185–12M12	NUT, SELF-LOCKING TUERCA AUTOBLOCANTE		1				
64	6X4–42728–10	CAP TAPA		1				

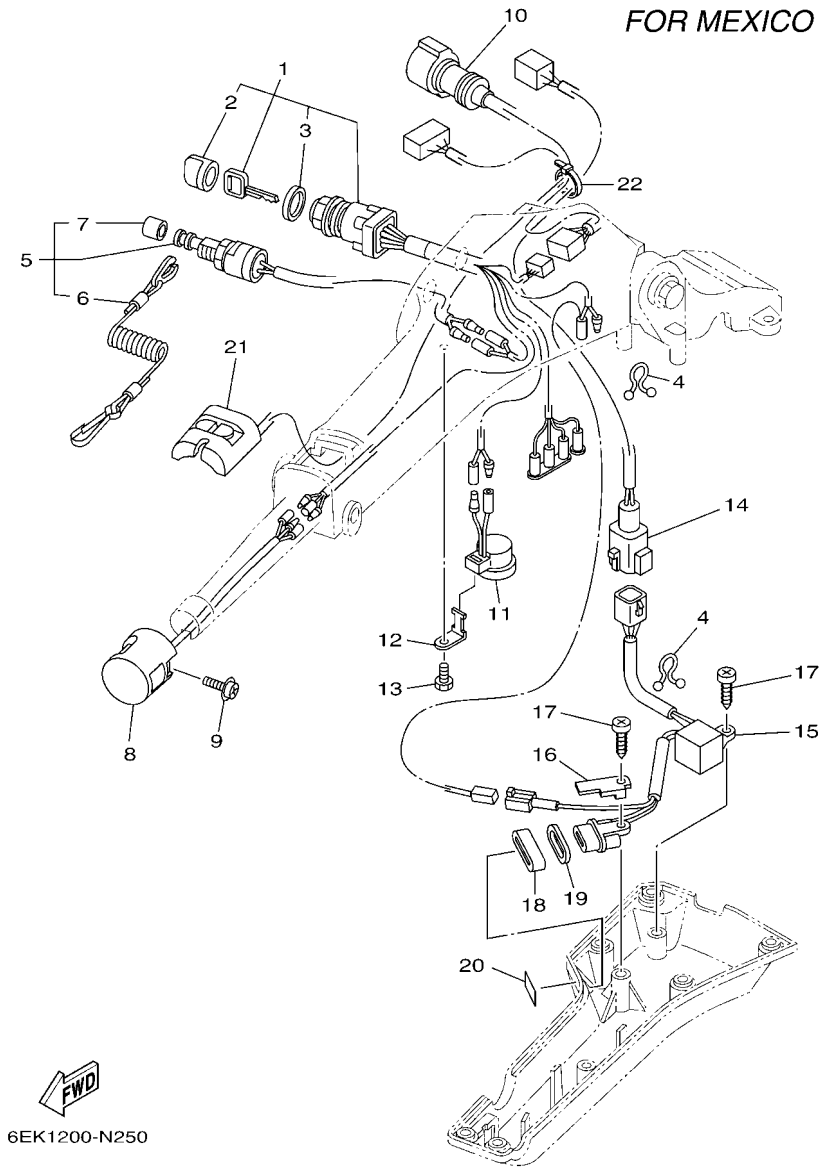

FIG. 25 STEERING 2 — DIRECCION 2

REF. NO.	PART NO. CODIGO Nº	DESCRIPTION DESCRIPCION	ET	EHT	6EL4			REMARKS OBSERVACIONES
1	6X4–82510–41	MAIN SWITCH ASSY CONJUNTO DE LLAVE IGNICION		1				
2	676–82577–01	.CAP, KEY .TAPA		1				
3	703–82532–00	.CAP .TAPA		1				
4	90464–08M07	CLAMP BRIDA		2				
5	69W–82575–00	ENGINE STOP SWITCH ASSY INTERRUPTOR DE PARADA COMPL		1				
6	682–82556–00	.LANYARD, STOP SWITCH .CORDON DE INTERRUPTOR PARADA		1				
7	689–8257Y–00	.CAP .TAPA		1				
8	6X4–82563–01	TRIM & TILT SWITCH ASSY INTERRUPTOR DE INCLINACION		1				
9	97980–06216	SCREW, WITH WASHER TORNILLO, CON ARANDELA		1				
10	6X4–82586–10	EXT., WIRE HARNESS (L:950MM) EXT, CONJ. DE CABLES (L:950MM)		1				
11	6X4–83383–00	BUZZER ZUMBADOR		1				
12	6X4–83386–00	STAY, BUZZER TIRANTE DE ZUMBADOR		1				
13	97095–06014	BOLT PERNO		1				
14	6X4–83653–20	WIRE, LEAD (L:700MM) CABLE CONDUCTOR (L:700MM)		1				
15	6C5–84301–00	PILOT LIGHT ASSY 1 LUZ PILOTO COMPLETA 1		1				
16	6X4–44114–00	STOPPER RETEN		1				
17	97780–60620	SCREW, TAPPING TORNILLO DE CABEZA DE CONO ACH		2				
18	6X4–42727–00	GROMMET TAPON		1				
19	6H4–83589–00	GASKET EMPAQUE		1				
20	6X4–85415–00	MARK, SIGNAL LAMP MARCO DE FOCO DE SENAL		1				
21	6X4–81860–00	SWITCH ASSY INTERRUPTOR COMPL		1				
22	90465–13M24	CLAMP BRIDA		1				

FIG. 26 STEERING FRICTION — FRICCION DE DIRECCION

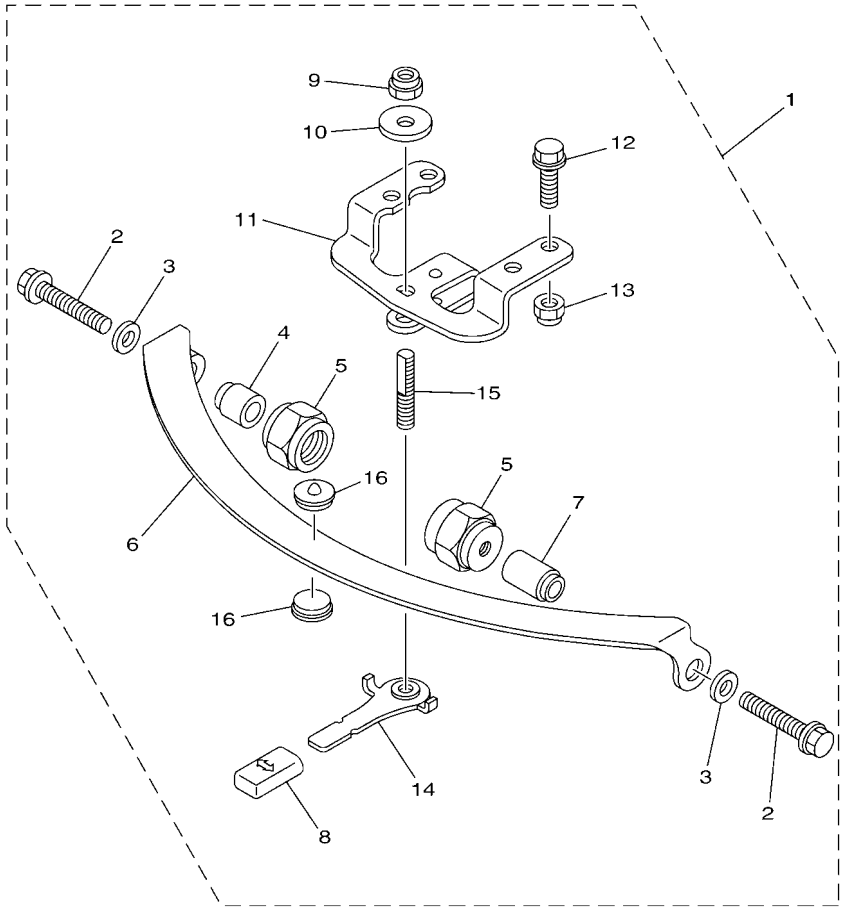

6FP1200-R390

REF. NO.	PART NO. CODIGO Nº	DESCRIPTION DESCRIPCION	ET	EHT	6EL4			REMARKS OBSERVACIONES
1	67G–42508–10	STEERING FRICTION ASSY DIRECCION FRICCION COMP.		1				
2	90119–08M74	.BOLT, WITH WASHER .TORNILLO CON ARANDELA		2				
3	90201–08M01	.WASHER, PLATE .ARANDELA PLANA		2				
4	67G–42541–00	.PIPE 1 .TUBO 1		1				
5	67G–42546–00	.NUT .TUERCA		2				
6	63D–42527–00	.PLATE, FRICTION .PLACA DE FRICCION		1				
7	67G–42541–10	.PIPE 1 .TUBO 1		1				
8	682–43318–01	.COVER .CUBIERTA		1				
9	90185–10M14	.NUT, SELF-LOCKING .TUERCA AUTOBLOCANTE		1				
10	90201–10M76	.WASHER, PLATE .ARANDELA PLANA		1				
11	6X4–42526–00	.PLATE, FRICTION .PLACA DE FRICCION		1				
12	97595–08525	.BOLT, WITH WASHER .PERNO CON ARANDELA		2				
13	90185–08057	.NUT, SELF-LOCKING .TUERCA AUTOBLOCANTE		2				
14	67G–42561–00	.KNOB, STEERING LOCK .PERILLA		1				
15	67G–42562–00	.SHAFT, STEERING LOCK .EJE,CERRADURA DE DIRECCION		1				
16	63D–42528–00	.PLATE, FRICTION .PIEZA DE FRICCION		2				

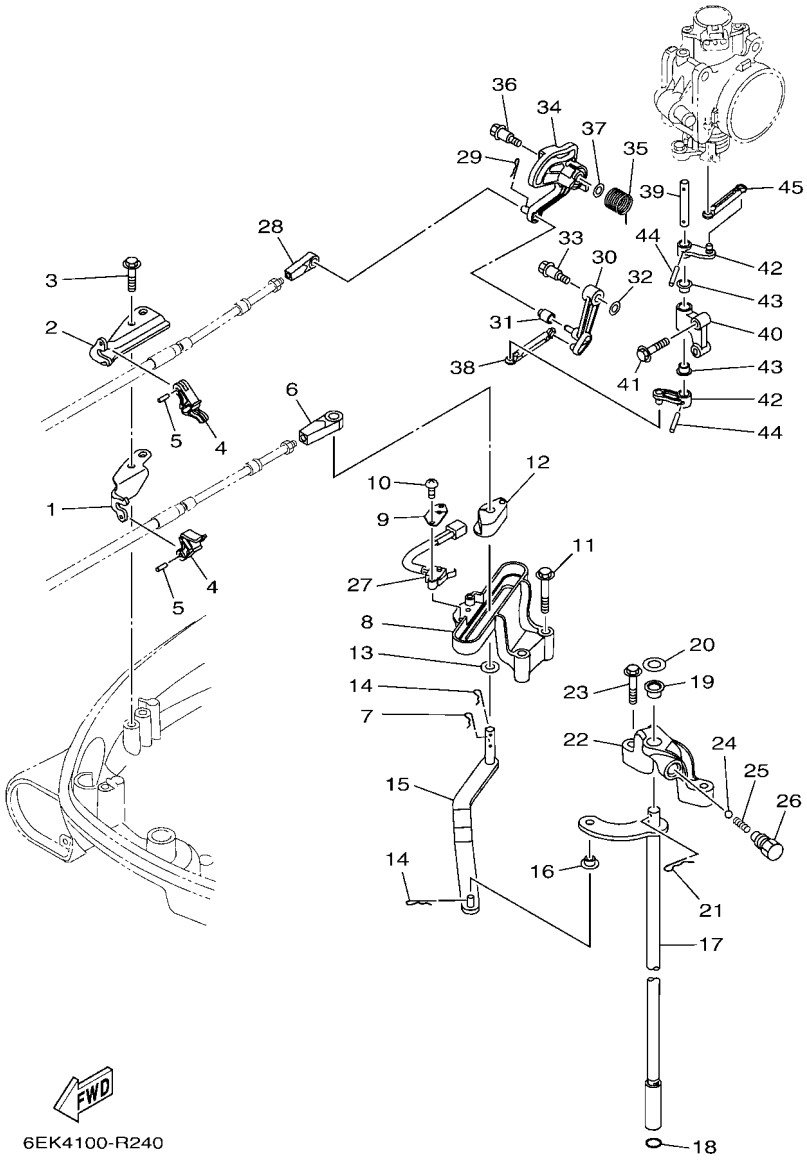

FIG. 27 CONTROL

REF. NO.	PART NO. CODIGO Nº	DESCRIPTION DESCRIPCION	ET	EHT	6EL4			REMARKS OBSERVACIONES
1	6EK–48531–01	BRACKET, REMOTE CONTROL 1 SOPORTE DE CONTROL REMOTO	1	1	1			
2	6EK–48532–00	BRACKET, REMOTE CONTROL 2 SOPORTE DE CONTROL REMOTO	1	1	1			
3	90109–06M81	BOLT PERNO	2	2	2			
4	6EK–48538–00	CLAMP, CABLE 1 GRAMPA DE CABLE	2	2	2			
5	91690–30010	PIN, SPRING PASADOR DE RESORTE	2	2	2			
6	6E5–48344–00	CABLE END, REMOTE CONTROL BASE CONTROL	1	1	1			
7	90468–18008	CLIP PRESILLA	1	1	1			
8	6EK–44117–01	BRACKET SOPORTE	1	1	1			
9	61A–82588–01	PLATE PLACA	1	1	1			
10	97985–04116	SCREW, WITH WASHER TORNILLO, CON ARANDELA	2	2	2			
11	95875–06040	BOLT, FLANGE TORNILLO	2	2	2			
12	63P–44122–00	BUSHING, SHIFT ROD LEVER BUJE PALANCA VARILLA DE CAMBIO	1	1	1			
13	90202–08M20	WASHER, PLATE ARANDELA DE PLANA	1	1	1			
14	90468–18008	CLIP PRESILLA	2	2	2			
15	6EK–44121–00	LEVER, SHIFT ROD PALANCA VARILLA CAMBIOS	1	1	1			
16	90386–06M12	BUSH BUJE	1	1	1			
17	6EK–44120–00	HANDLE GEAR SHIFT ASSY MANIJA DE CAMBIO COMPL	1					L(20.3") L(20.3")
	6EK–44120–10	HANDLE GEAR SHIFT ASSY MANIJA DE CAMBIO COMPL	1	1	1			X(25.3") X(25.3")
18	93210–09165	O-RING ANILLO O	1	1	1			
19	90386–10001	BUSH BUJE	1	1	1			
20	90201–11008	WASHER, PLATE ARANDELA PLANA	1	1	1			
21	90468–180A0	CLIP PRESILLA	1	1	1			
22	6EK–44118–00	BRACKET SOPORTE	1	1	1			
23	95895–06030	BOLT, FLANGE TORNILLO DE REBORDE	2	2	2			
24	93501–04M02	BALL BOLA	1	1	1			
25	90501–12082	SPRING, COMPRESSION RESORTE DE COMPRESION	1	1	1			
26	648–42715–00	BUSHING BUJE	1	1	1			

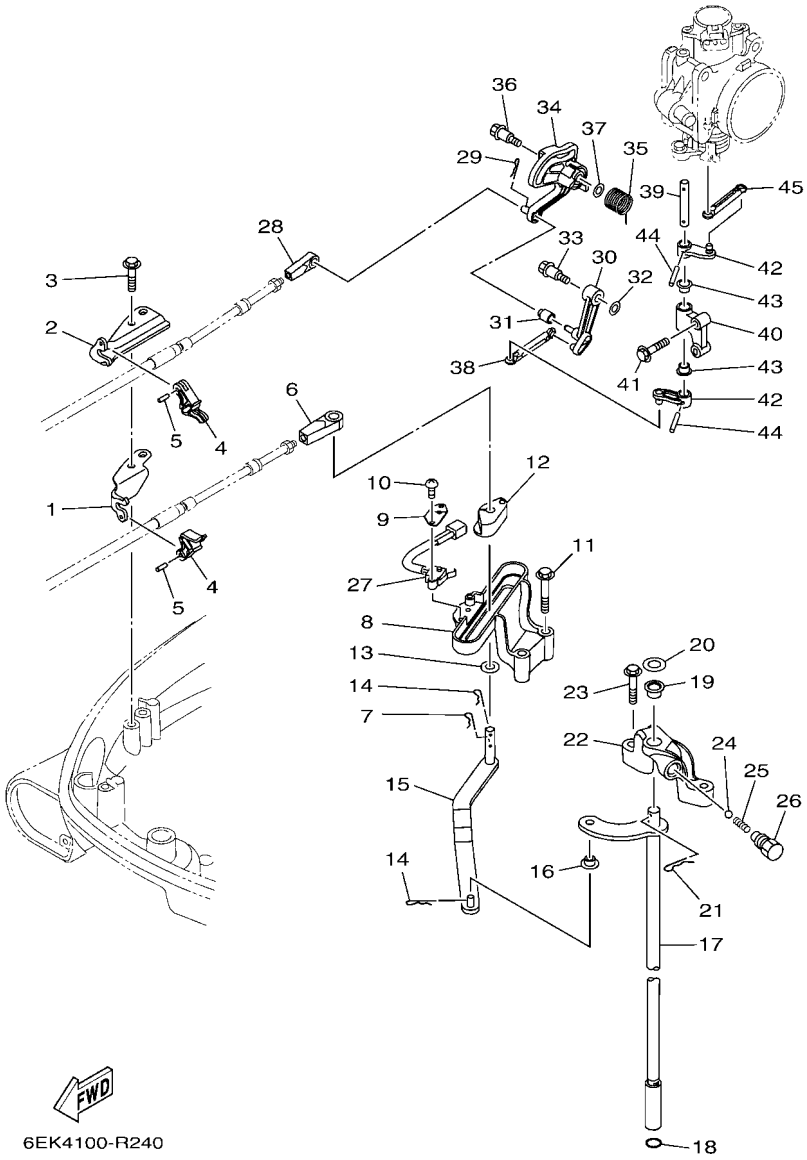

FIG. 27 CONTROL — CONTROL

REF. NO.	PART NO. CODIGO Nº	DESCRIPTION DESCRIPCION	ET	EHT	6EL4			REMARKS OBSERVACIONES
27	60V–8259F–00	SWITCH ASSY INTERRUPTOR	1	1	1			
28	6E5–48344–00	CABLE END, REMOTE CONTROL BASE CONTROL	1	1	1			
29	90468–18008	CLIP PRESILLA	1	1	1			
30	6EK–42154–00	LEVER, THROTTLE CONTROL PALANCA CONTROL ACELERADOR	1	1	1			
31	68V–42171–00	BUSHING BUJE	1	1	1			
32	90201–06M05	WASHER, PLATE ARANDELA PLANA	1	1	1			
33	90109–06288	BOLT PERNO	1	1	1			
34	6EK–41213–00	CAM, ACCEL. LEVA ACELERADOR	1	1	1			
35	6EK–44135–00	SPRING RESORTE	1	1	1			
36	90109–06288	BOLT PERNO	1	1	1			
37	90201–06M05	WASHER, PLATE ARANDELA PLANA	1	1	1			
38	6EK–41237–10	JOINT, LINK CONECTOR	1	1	1			
39	6EK–41635–00	SHAFT, LINK CONNECTING EJE ESLABON CONECTOR	1	1	1			
40	6EK–41662–00	BRACKET 2 SOPORTE 2	1	1	1			
41	95895–06030	BOLT, FLANGE TORNILLO DE REBORDE	2	2	2			
42	6EK–42157–00	LEVER, THROTTLE PALANCA DE ACELERADOR	2	2	2			
43	90386–10001	BUSH BUJE	2	2	2			
44	91690–30018	PIN, SPRING PASADOR DE RESORTE	2	2	2			
45	6EK–41237–00	JOINT, LINK CONECTOR	1	1	1			

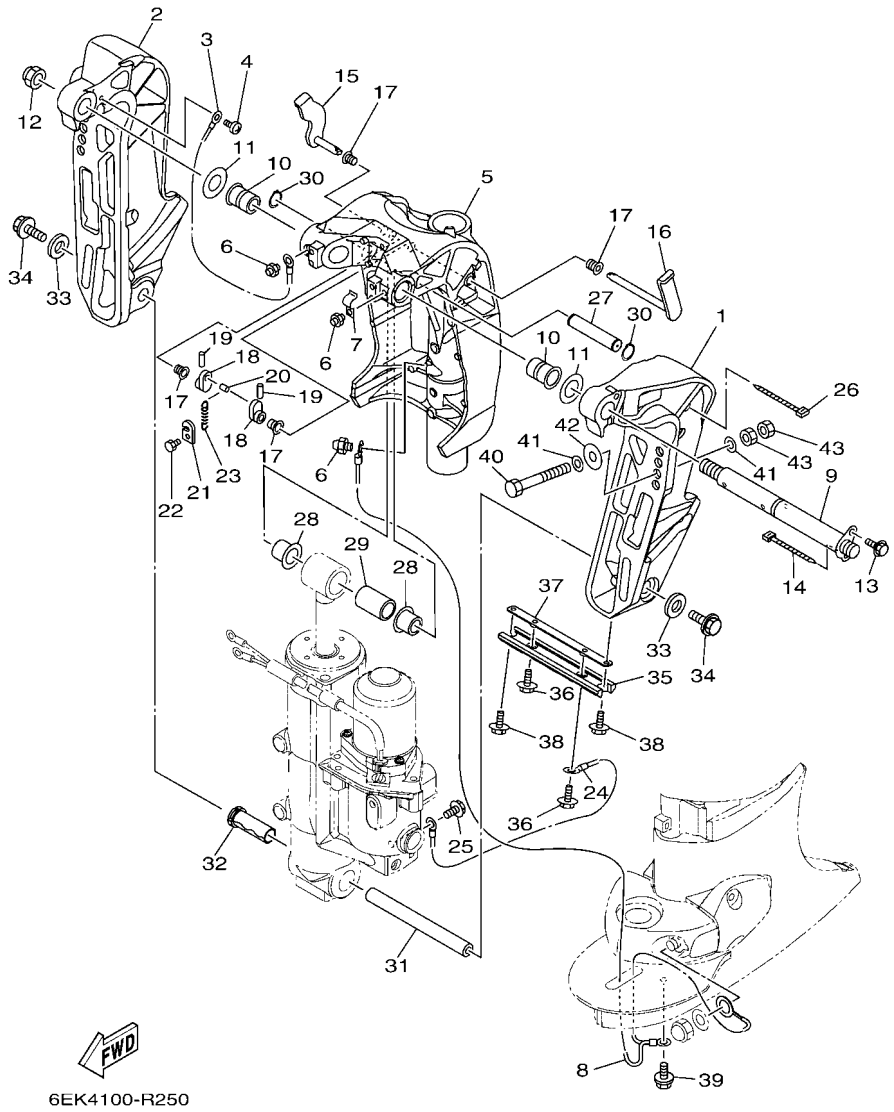

FIG. 28 BRACKET 1 — SOPORTE 1

REF. NO.	PART NO. CODIGO Nº	DESCRIPTION DESCRIPCION	ET	EHT	6EL4			REMARKS OBSERVACIONES
1	6EK–43111–00–8D	BRACKET, CLAMP 1 SOPORTE DE LA ABRAZADERA 1	1	1	1			
2	6EK–43112–00–8D	BRACKET, CLAMP 2 SOPORTE DE LA ABRAZADERA 2	1	1	1			
3	6E5–82148–00	WIRE, LEAD 4 CABLE CONDUCTOR 4	1	1	1			
4	97880–06012	SCREW, PAN HEAD TORNILLO DE CABEZA CON PLANA	1	1	1			
5	6EK–43311–00–8D	BRACKET, SWIVEL 1 SOPORTE GIRATORIO 1	1					L(20.3") L(20.3")
	6EK–43311–10–8D	BRACKET, SWIVEL 1 SOPORTE GIRATORIO 1	1	1	1			X(25.3") X(25.3")
6	93700–06M03	NIPPLE, GREASE BOQUILLA DE ENGRASAR	3	3	3			
7	90465–08M63	CLAMP BRIDA	1	1	1			
8	66K–82149–00	WIRE, LEAD 3 CABLE CONDUCTOR 3	1					L(20.3") L(20.3")
	68V–82149–30	WIRE, LEAD 3 CABLE CONDUCTOR 3	1	1	1			X(25.3") X(25.3")
9	64E–43131–30	BOLT, CLAMP BRACKET TORNILLO DE ABRAZADERA DEL SOP	1	1	1			
10	90386–25M31	BUSH BUJE	2	2	2			
11	90201–26M59	WASHER, PLATE ARANDELA PLANA	2	2	2			
12	90185–22M11	NUT, SELF-LOCKING TUERCA AUTOBLOCANTE	1	1	1			
13	97595–08520	BOLT, WITH WASHER PERNO CON ARANDELA	1	1	1			
14	90465–11M10	CLAMP BRIDA	1	1	1			
15	6EK–43181–00	LEVER, TILT STOP 1 PALANCA TOPE INCLINACION 1	1	1	1			
16	6EK–43185–00	LEVER, TILT STOP 2 PALANCA TOPE INCLINACION 2	1	1	1			
17	90386–10M16	BUSH BUJE	4	4	4			
18	6G5–43148–00	COLLAR, DISTANCE COLLAR	2	2	2			
19	91690–30020	PIN, SPRING PASADOR DE RESORTE	2	2	2			
20	90249–06M19	PIN PASADOR	1	1	1			
21	66T–43144–00	HOOK, SPRING GANCHO	1	1	1			
22	97095–06010	BOLT PERNO	1	1	1			
23	90506–14M24	SPRING, TENSION RESORTE DE TENSION	1	1	1			
24	6D8–82148–00	WIRE, LEAD 4 CABLE CONDUCTOR 4	1	1	1			
25	97595–06510	BOLT, WITH WASHER PERNO CON ARANDELA	1	1	1			

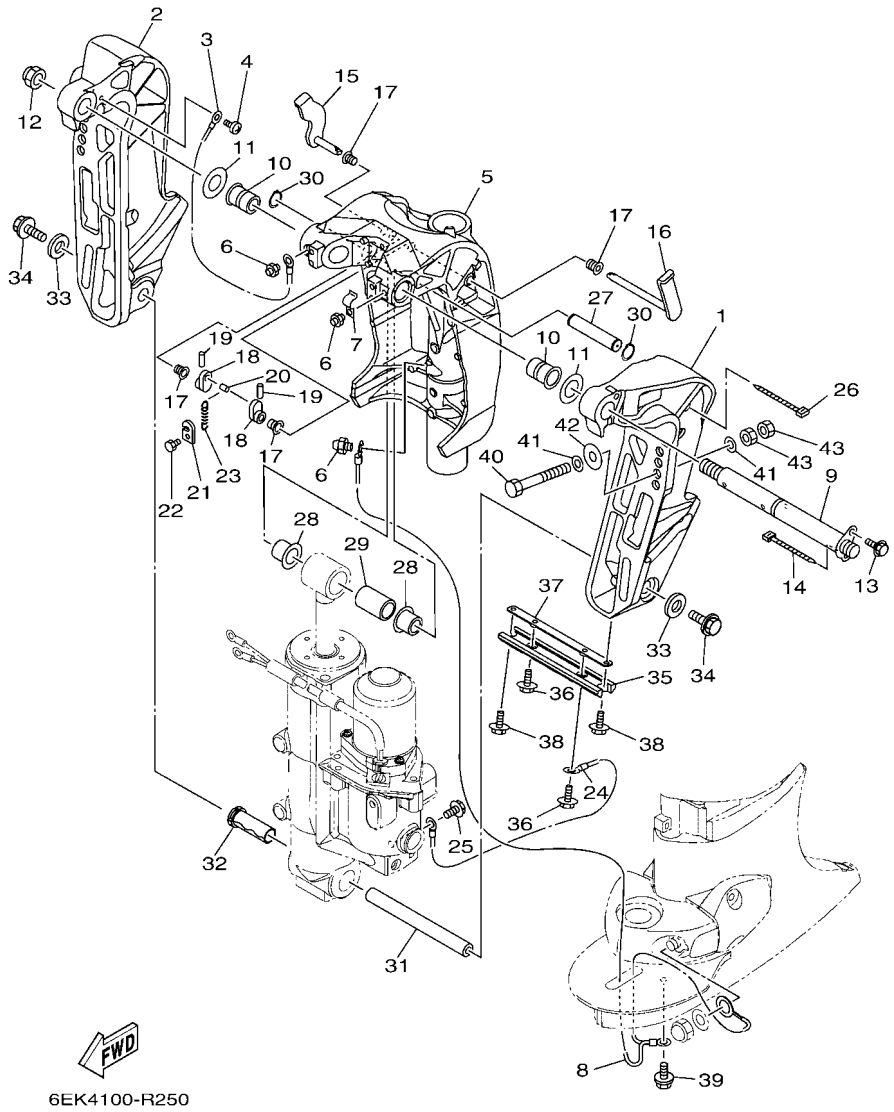

FIG. 28 BRACKET 1 — SOPORTE 1

REF. NO.	PART NO. CODIGO Nº	DESCRIPTION DESCRIPCION	ET	EHT	6EL4			REMARKS OBSERVACIONES
26	90465–13M18	CLAMP BRIDA	1	1	1			
27	6EK–43126–00	PIN, UPPER SHOCK MOUNT PASADOR DE AMORTIGUADOR SUPERI	1	1	1			
28	90386–18M35	BUSH BUJE	2	2	2			
29	90386–18001	BUSH BUJE	1	1	1			
30	93410–18M05	CIRCLIP SEGURO	2	2	2			
31	6EK–43818–00	PIN, LOWER SHOCK MOUNT PASADOR AMORTIGUADOR INFERIOR	1	1	1			
32	90383–20001	BUSH, FORMED BUJE	1	1	1			
33	90201–10060	WASHER, PLATE ARANDELA PLANA	2	2	2			
34	90119–10054	BOLT, WITH WASHER TORNILLO CON ARANDELA	2	2	2			
35	6H1–45251–03	ANODE CATODE	1	1	1			
36	90119–06M81	BOLT, WITH WASHER TORNILLO CON ARANDELA	2	2	2			
37	6EK–44536–00	PLATE 2 PLACA 2	1	1	1			
38	97595–06616	BOLT, WITH WASHER PERNO CON ARANDELA	2	2	2			
39	95895–06010	BOLT, FLANGE TORNILLO DE REBORDE	1	1	1			
40	90101–12M05	BOLT (L:130MM) TORNILLO (L:130MM)	4	4	4			UR CHN,MEX,OTH,NME UR CHN,MEX,OTH,NME
	90101–12M03	BOLT (L:115MM) TORNILLO (L:115MM)	4		4			UR CAR UR CAR
	90101–12M05	BOLT (L:130MM) TORNILLO (L:130MM)	2		2			UR BRA,NME,OTH UR BRA,NME,OTH
	90101–12047	BOLT (L:150MM) TORNILLO (L:150MM)	2		2			UR BRA,NME,OTH UR BRA,NME,OTH
41	90201–13M01	WASHER, PLATE ARANDELA PLANA	8	8	8			
42	90201–12426	WASHER, PLATE ARANDELA PLANA	4	4	4			
43	95380–12600	NUT TUERCA	8	8	8			

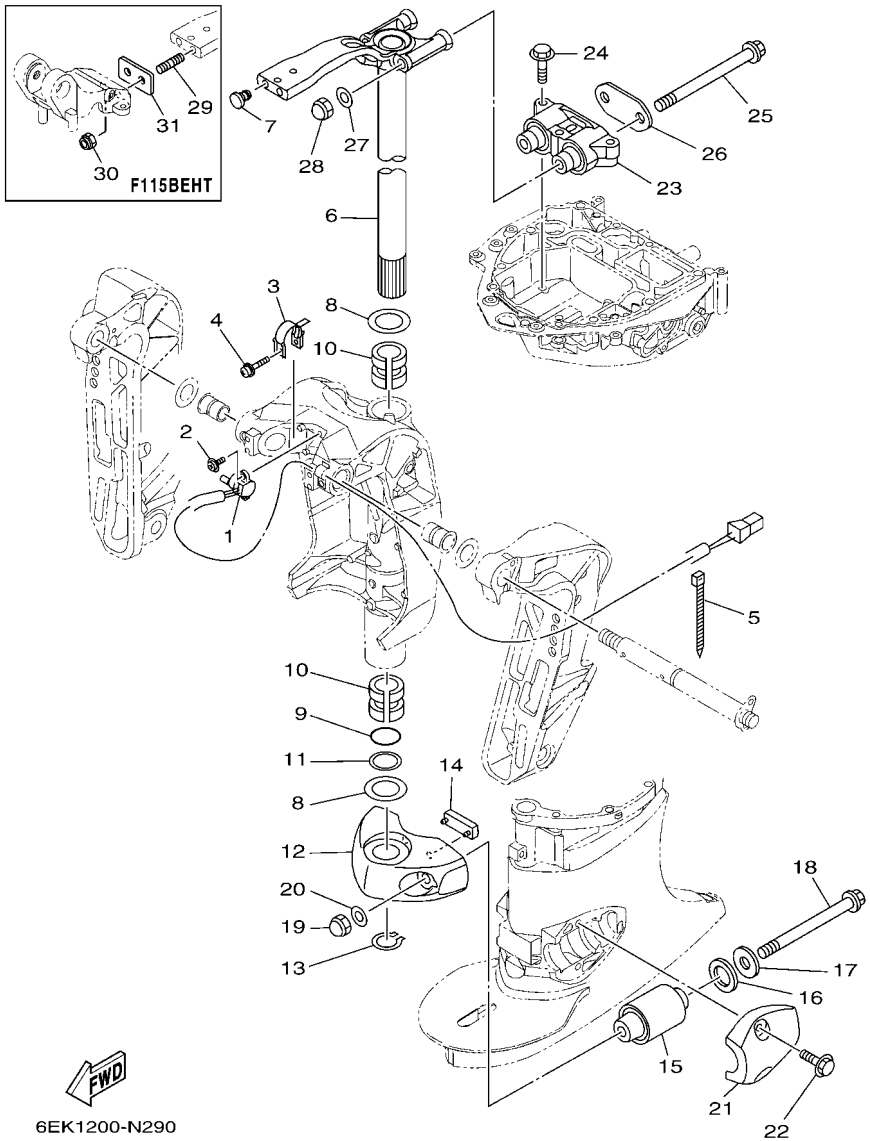

FIG. 29 BRACKET 2 — SOPORTE 2

REF. NO.	PART NO. CODIGO Nº	DESCRIPTION DESCRIPCION	ET	EHT	6EL4			REMARKS OBSERVACIONES
1	67H–83672–01	TRIM SENDER TRANSMISOR DE INCLINADOR	1	1	1			
2	97985–06216	SCREW, WITH WASHER TORNILLO, CON ARANDELA	2	2	2			
3	64E–43139–10	CAM, TRIM SENDER LEVA TRANSMISOR DE INCLINDOR	1	1	1			
4	90159–05059	SCREW, WITH WASHER TORNILLO CON VALONA	1	1	1			
5	90465–11M10	CLAMP BRIDA	2	2	2			
6	6EK–42510–00–8D	STEERING BRACKET ASSY SOPORTE DIRECCION COMPL.	1					L(20.3") L(20.3")
	6EK–42510–10–8D	STEERING BRACKET ASSY SOPORTE DIRECCION COMPL.	1	1	1			X(25.3") X(25.3")
7	90338–08174	PLUG TAPON	2	2	2			
8	90201–38M60	WASHER, PLATE ARANDELA PLANA	2	2	2			
9	93210–37MH7	O-RING ANILLO O	1	1	1			
10	90386–38M32	BUSH BUJE	2	2	2			
11	90202–40M47	WASHER, PLATE ARANDELA DE PLANA	1	1	1			
12	6EK–44551–00–8D	HOUSING, LOWER MOUNT RUBBER 1 CAJA AMORTIGUADOR INFERIOR HU	1	1	1			
13	93410–37M04	CIRCLIP SEGURO	1	1	1			
14	61A–44575–00	DAMPER, LOWER MOUNT RUBBER AMORTIGUADOR INFERIOR	1	1	1			
15	63P–44555–00	MOUNT DAMPER, LOWER SIDE AMORTIGUADOR DE HULE LADO INFE	2	2	2			
16	90202–32M19	WASHER, PLATE ARANDELA DE PLANA	2	2	2			
17	90201–16M55	WASHER, PLATE ARANDELA PLANA	2	2	2			
18	90105–14013	BOLT, FLANGE TORNILLO	2	2	2			
19	90176–14002	NUT, CROWN TUERCA CORONA	2	2	2			
20	92995–14600	WASHER ARANDELA	2	2	2			
21	6EK–44553–00–8D	COVER, LOWER MOUNT CUBIERTA,AMORTIGUADOR INFERIOR	2	2	2			
22	90119–10058	BOLT, WITH WASHER TORNILLO CON ARANDELA	4	4	4			
23	6EK–44514–00	MOUNT DAMPER, UPPER SIDE AMORTIGUADOR LADO SUPERIOR	1	1	1			
24	95875–10060	BOLT, FLANGE TORNILLO	3	3	3			
25	90105–14007	BOLT, FLANGE TORNILLO	2	2	2			
26	6EK–44526–00	PLATE PLACA 1	1	1	1			

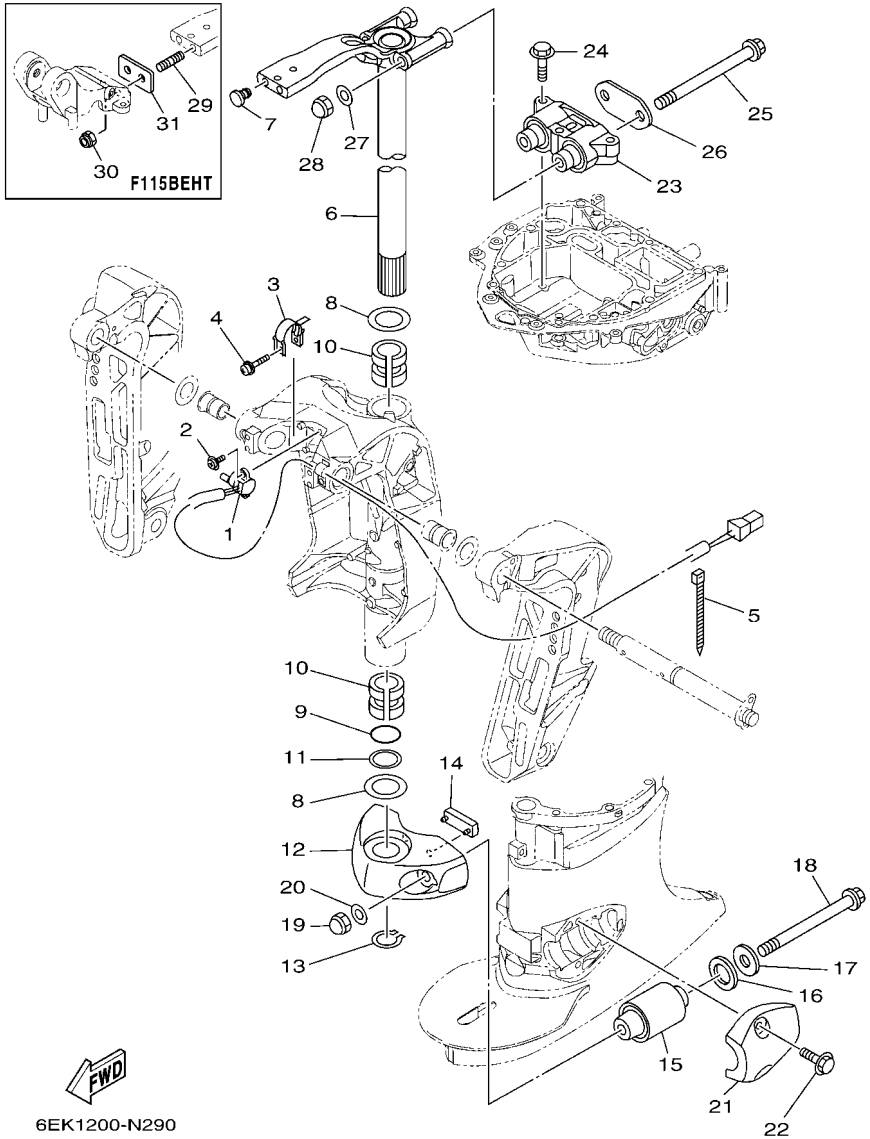

FIG. 29 BRACKET 2 — SOPORTE 2

REF. NO.	PART NO. CODIGO Nº	DESCRIPTION DESCRIPCION	ET	EHT	6EL4			REMARKS OBSERVACIONES
27	92995–14600	WASHER ARANDELA	2	2	2			
28	90176–14002	NUT, CROWN TUERCA CORONA	2	2	2			
29	90116–10063	BOLT, STUD ESPARRAGO		2				
30	90185–10027	NUT, SELF-LOCKING TUERCA AUTOBLOCANTE		2				
31	6EK–42121–00	BRACKET SOPORTE		1				

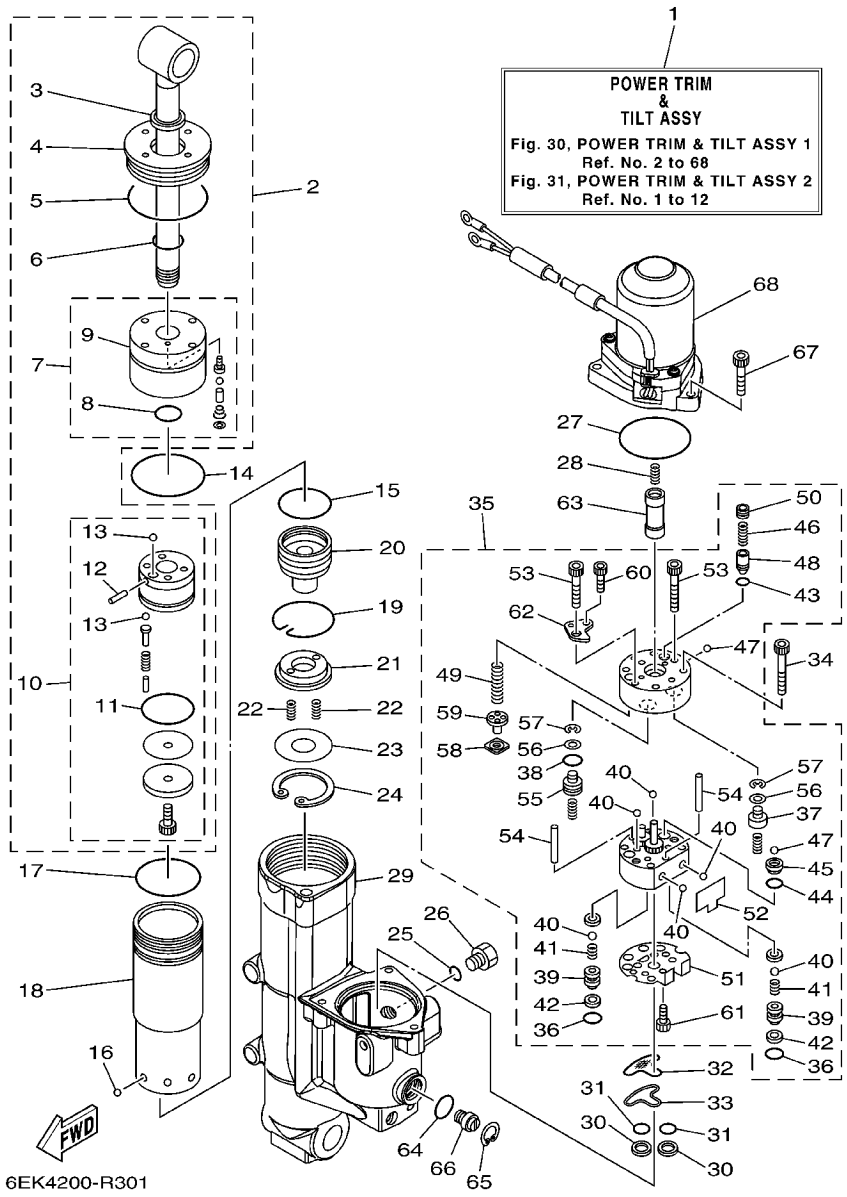

FIG. 30 POWER TRIM & TILT ASSY 1 — COMPONER Y PODER VARILLA 1

REF. NO.	PART NO. CODIGO Nº	DESCRIPTION DESCRIPCION	ET	EHT	6EL4			REMARKS OBSERVACIONES
1	6EK–43800–02	POWER TRIM & TILT ASSY ELEVADOR HIDRAULICO COMPL.	1	1	1			
2	6EK–43810–00	TILT PISTON SUB ASSY ELEVADOR SUB-PISTON COMPL.	1	1	1			
3	6H1–43812–00	.SEAL, DUST .SELLO DE POLVO	1	1	1			
4	6EK–43821–00	.SCREW, TRIM CYLINDER END .TORNILLO CILINDURO EXTREMO	1	1	1			
5	6EK–43861–00	.O-RING .ANILLO EN O 1	1	1	1			
6	6D8–43861–00	.O-RING .ANILLO EN O 1	1	1	1			
7	6EK–4380R–00	.CYLINDER END SUB ASSY .CILINDRO EXTREMO SUB-COMPLET	1	1	1			
8	6D8–43861–00	..O-RING ..ANILLO EN O 1	1	1	1			
9	6EK–43811–00	..SCREW, CYLINDER END ..TORNILLO CILINDRO EXTREMO	1	1	1			
10	6EK–4380P–00	.PISTON SUB ASSY .SUB-PISTON COMPL	1	1	1			
11	6H1–43862–00	..O-RING ..ANILLO EN O 2	1	1	1			
12	91609–16012	..PIN, SPRING ..PASADOR DE RESORTE	1	1	1			
13	93505–32038	..BALL ..BOLA	5	5	5			
14	67F–43865–00	O-RING ANILLO EN O 5	1	1	1			
15	6H1–43862–00	O-RING ANILLO EN O 2	1	1	1			
16	93503–16003	BALL ESFERA	6	6	6			
17	7BB–G3861–00	O-RING ANILLO EN O 1	1	1	1			
18	6EK–22471–01	CYLINDER, SHOCK ABSORBER CILINDRO DE AMORTIGUADOR	1	1	1			
19	6EK–43875–00	RING, SNAP ANILLO	1	1	1			
20	6EK–4381B–00	FREE PISTON SUB ASSY SUB-PISTON COMPL	1	1	1			
21	6EK–43899–00	PLATE STOPPER PLACA	1	1	1			
22	62X–4384H–00	SPRING RESORTE	2	2	2			
23	6EK–22434–00	PLATE, VALVE 1 PLATO DE VALVULA 1	1	1	1			
24	99009–47500	CIRCLIP PRESILLA REDONDA	1	1	1			
25	93210–09165	O-RING ANILLO O	1	1	1			
26	6EK–43829–00	PLUG, RESERVOIR TAPON DEPOSITO	1	1	1			
27	93210–68N50	O-RING ANILLO O	1	1	1			

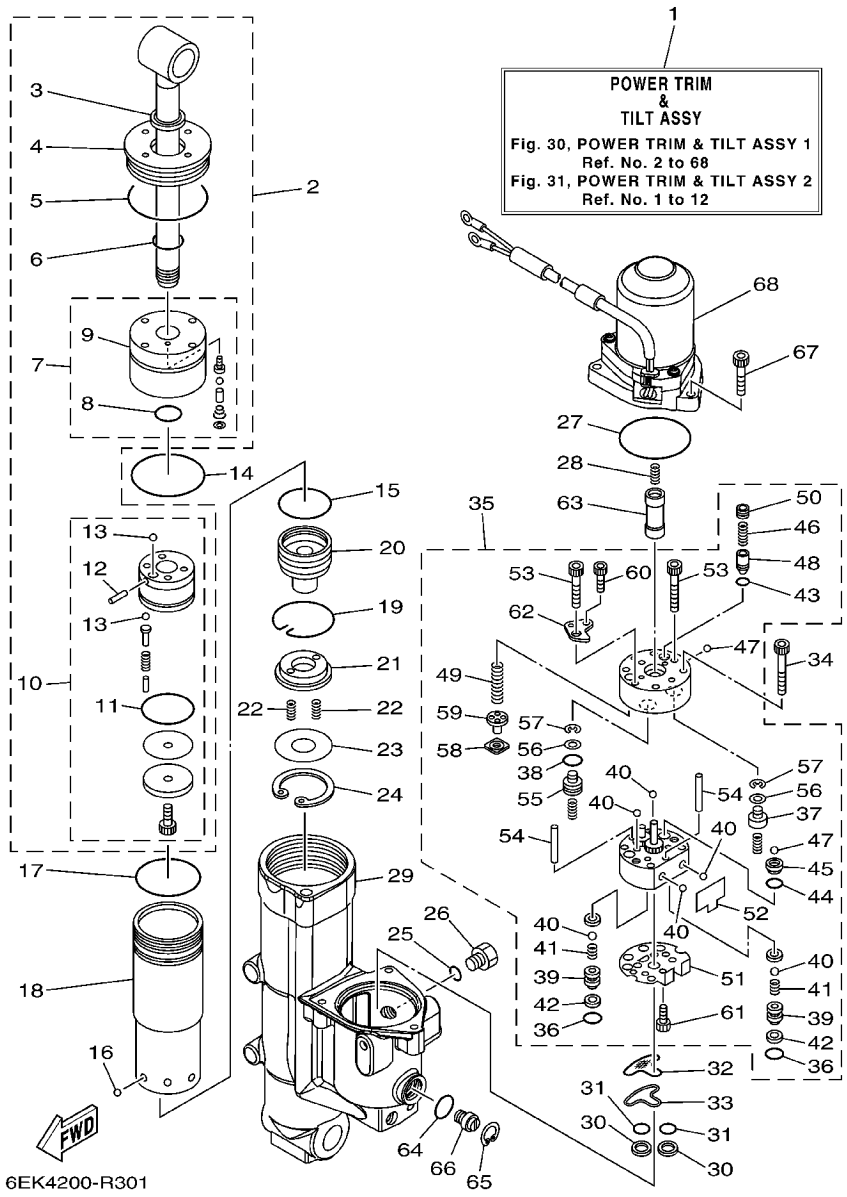

FIG. 30 POWER TRIM & TILT ASSY 1 — COMPONER Y PODER VARILLA 1

REF. NO.	PART NO. CODIGO Nº	DESCRIPTION DESCRIPCION	ET	EHT	6EL4			REMARKS OBSERVACIONES
28	62X–4384H–00	SPRING RESORTE	1	1	1			
29	6EK–4380K–02	CYLINDER, TILT SUB ASSY CILINDRO, INCLINACION	1	1	1			
30	6C6–43817–00	FILTER 2 FIELTRO 2	2	2	2			
31	69J–4389J–00	O-RING ANILLO O	2	2	2			
32	6C5–43816–00	FILTER 1 FIELTRO 1	1	1	1			
33	6C5–4380G–00	PLATE PLACA	1	1	1			
34	91318–05045	BOLT TORNILLO	4	4	4			
35	6EK–43830–00	GEAR PUMP ASSY ENGRANAJE BOMBA COMPL.	1	1	1			
36	69J–4389J–00	.O-RING .ANILLO O	2	2	2			
37	6D8–4384M–00	.PISTON, SHUTTLE 2 .PISTON 2	1	1	1			
38	6H1–43883–00	.O-RING .ANILLO EN O 10	1	1	1			
39	6EK–4382E–00	.ADAPTOR 2 .ADAPTADOR 2	2	2	2			
40	93505–32038	.BALL .BOLA	6	6	6			
41	6C6–43853–00	.SPRING, MAIN VALVE .RESORTE	2	2	2			
42	6C6–4387G–00	.WASHER .ARANDELA	2	2	2			
43	93210–04N51	.O-RING .ANILLO O	1	1	1			
44	93210–064A5	.O-RING .ANILLO O	1	1	1			
45	6D8–43851–00	.SEAT, RELIEF VALVE .ASIENTO VALVULA DE DESCARGA	1	1	1			
46	6C5–43855–10	.SPRING, UP RELIEF .RESORTE SEGURIDAD SUPERIOR	1	1	1			
47	93501–08001	.BALL .BOLA	2	2	2			
48	6D8–43844–00	.PIN, VALVE SUPPORT .PASADOR VALVULA SOPORTE	1	1	1			
49	6EK–43856–00	.SPRING, DOWN RELIEF .RESORTE SEGURIDAD	1	1	1			
50	6D8–43843–00	.SCREW, VALVE LOCK .TORNILLO	1	1	1			
51	6C5–43895–00	.SEAT, RELIEF VALVE .ASIENTO	1	1	1			
52	6C5–43854–00	.SPRING, MANUAL RELEASE .RESORTE DESCOPLO MANUAL	1	1	1			
53	91318–05030	.BOLT .TORNILLO	2	2	2			
54	93604–26256	.PIN, DOWEL .PASADOR DE CLAVIJA	2	2	2			

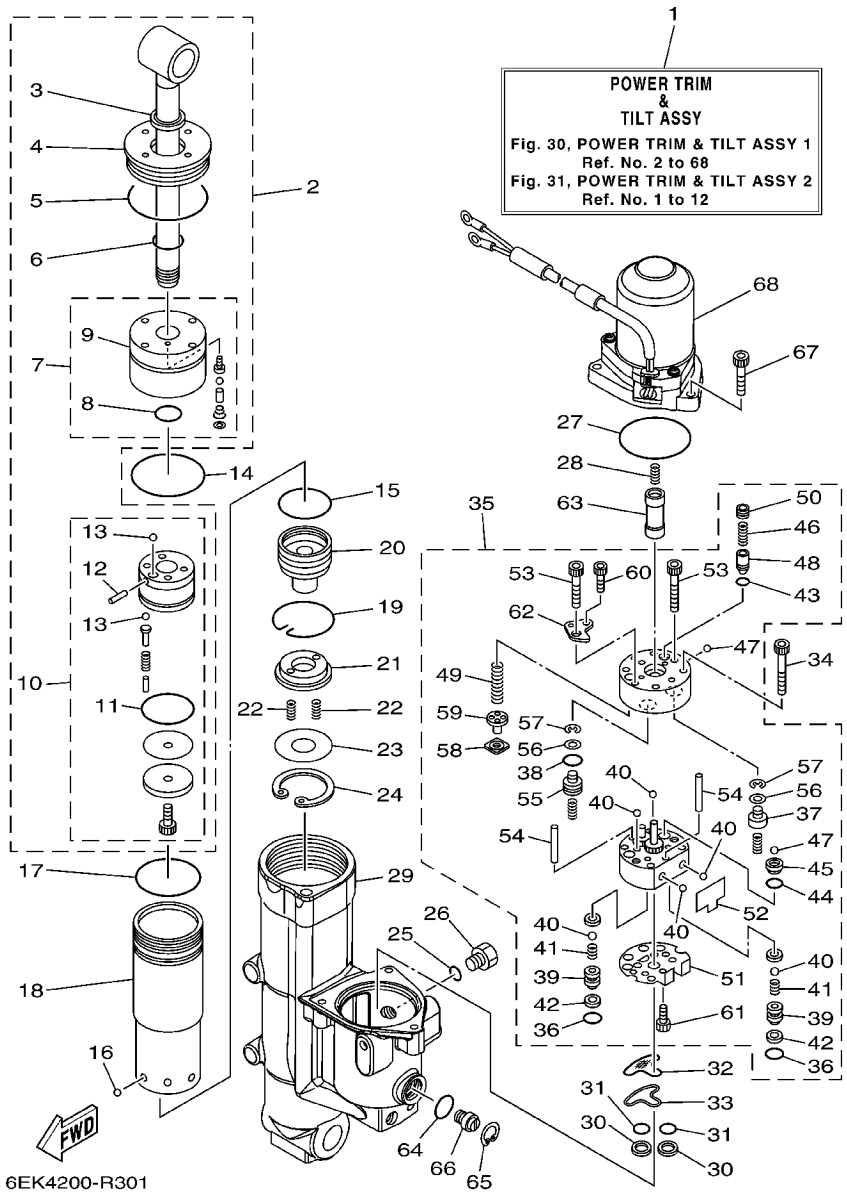

FIG. 30 POWER TRIM & TILT ASSY 1 — COMPONER Y PODER VARILLA 1

REF. NO.	PART NO. CODIGO Nº	DESCRIPTION DESCRIPCION	ET	EHT	6EL4			REMARKS OBSERVACIONES
55	6D8–43841–00	.PISTON, SHUTTLE .PISTON	1	1	1			
56	69A–4384F–00	.SEAL, MAIN VALVE .ASIENTO	2	2	2			
57	99002–03600	.CIRCLIP .PRESILLA REDONDA	2	2	2			
58	6H1–4384G–11	.SEAL, RELIEF VALVE .ASIENTO	1	1	1			
59	6H1–43844–10	.PIN, VALVE SUPPORT .PASADOR VALVULA SOPORTE	1	1	1			
60	91318–03025	.BOLT .TORNILLO	2	2	2			
61	91318–03005	.BOLT .TORNILLO	1	1	1			
62	6D8–4382L–00	.CAP, RELIEF VALVE .TAPA	1	1	1			
63	6EK–43831–00	CONNECTOR, SHAFT CONEXION EJE	1	1	1			
64	6D8–43863–00	O-RING ANILLO EN O 3	1	1	1			
65	6H1–43875–00	RING, SNAP ANILLO	1	1	1			
66	6EK–43845–00	SCREW, MANUAL RELEASE TORNILLO DESCOPLO MANUAL	1	1	1			
67	91380–06025	BOLT PERNO	3	3	3			
68	6EK–43880–11	MOTOR ASSY MOTOR COMPL.	1	1	1			REFER TO FIG.31 REFER TO FIG.31

FIG. 31 POWER TRIM & TILT ASSY 2 — COMPONER Y PODER VARILLA 2

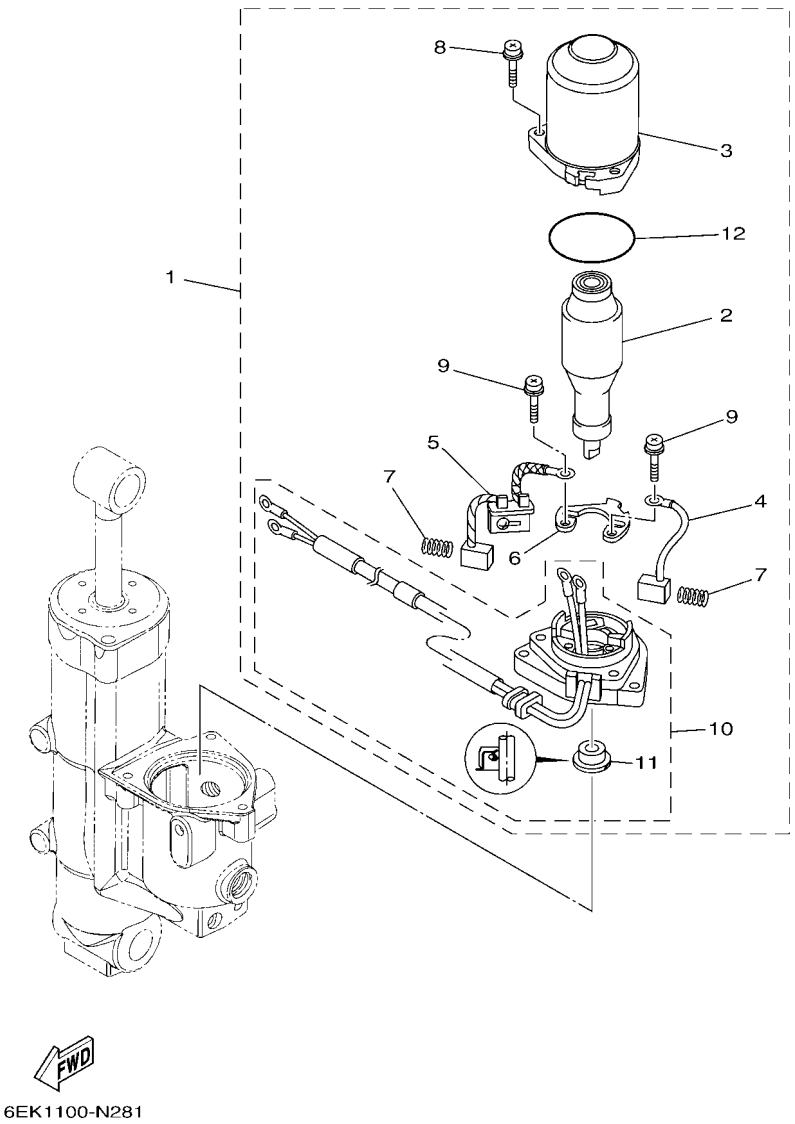

REF. NO.	PART NO. CODIGO Nº	DESCRIPTION DESCRIPCION	ET	EHT	6EL4			REMARKS OBSERVACIONES
1	6EK–43880–11	MOTOR ASSY MOTOR COMPL.	1	1	1			
2	6EK–43805–00	.ARMATURE ASSY .INDUCIDO COMPL.	1	1	1			
3	6EK–43804–11	.STATOR ASSY .ESTATOR COMPL	1	1	1			
4	6EK–43892–00	.BRUSH 2 .ESCOBILLA 2	1	1	1			
5	6EK–82181–00	.CIRCUIT BREAKER COMP. .RUPTOR DE CIRCUITO COMPL	1	1	1			
6	6EK–4380F–00	.PLATE, BRUSH HOLDER .PLACA	1	1	1			
7	62X–4386K–00	.SPRING, BRUSH .RESORTE, ESCOBILLA	2	2	2			
8	63P–43879–10	.SCREW, WITH WASHER .TORNILLO CON RONDANA	3	3	3			
9	97602–04316	.SCREW, PAN HEAD WITH WASHER .TORNILLO CON RONDONA	2	2	2			
10	6EK–43881–11	.FRAME, END .CUADRO EXTERMO	1	1	1			
11	6EK–43882–00	..OIL SEAL ..SELLO ACEITE	1	1	1			
12	93210–554A9	.O-RING .ANILLO O	1	1	1			

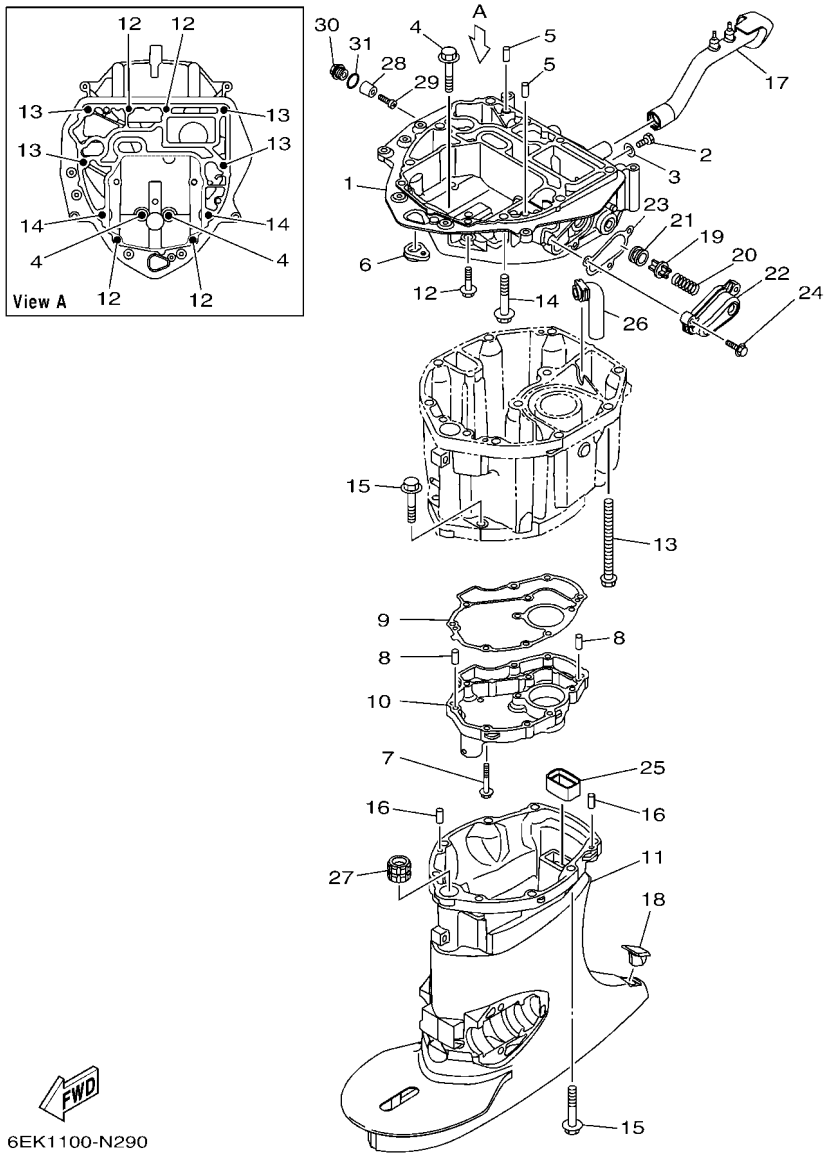

FIG. 32 UPPER CASING — FUNDA SUPERIOR

REF. NO.	PART NO. CODIGO Nº	DESCRIPTION DESCRIPCION	ET	EHT	6EL4			REMARKS OBSERVACIONES
1	6EK–41137–01	GUIDE, EXHAUST GUIA DE ESCAPE	1	1	1			
2	97095–08014	BOLT PERNO	1	1	1			
3	90430–08143	GASKET JUNTA	1	1	1			
4	97575–10545	BOLT, WITH WASHER PERNO CON ARANDELA	2	2	2			
5	93608–12M05	PIN, DOWEL PASADOR DE CLAVIJA	2	2	2			
6	6EK–42727–00	GROMMET TAPON	1	1	1			
7	95895–06030	BOLT, FLANGE TORNILLO DE REBORDE	11	11	11			
8	93606–12019	PIN, DOWEL PASADOR DE CLAVIJA	2	2	2			
9	6EK–41134–00	GASKET, EXHAUST MANIFOLD EMPAQUE	1	1	1			
10	6EK–45181–01	PLATE PLACA	1	1	1			
11	6EK–45111–00–8D	CASING, UPPER CAJA SUPERIOR	1					L(20.3") L(20.3")
	6EK–45111–10–8D	CASING, UPPER CAJA SUPERIOR	1	1	1			X(25.3") X(25.3")
12	97575–08535	BOLT, WITH WASHER PERNO CON ARANDELA	4	4	4			
13	90119–10007	BOLT, WITH WASHER TORNILLO CON ARANDELA	4	4	4			
14	97575–10545	BOLT, WITH WASHER PERNO CON ARANDELA	2	2	2			
15	97575–10545	BOLT, WITH WASHER PERNO CON ARANDELA	8	8	8			
16	93606–12019	PIN, DOWEL PASADOR DE CLAVIJA	2	2	2			
17	6EK–42769–00	SEAL, RUBBER SELLO DE GOMA	1	1	1			
18	6C5–45155–00	CAP TAPA	1	1	1			
19	6G5–12416–00	VALVE, PRESSURE CONTROL VALVULA DE CONTROL DE PRESION	1	1	1			
20	90501–200A2	SPRING, COMPRESSION RESORTE DE COMPRESION	1	1	1			
21	90480–20M05	GROMMET TAPON	1	1	1			
22	6EK–1246A–00–9S	COVER 1 CUBIERTA 1	1	1	1			
23	6EK–12435–A0	GASKET EMPAQUE	1	1	1			
24	95895–06025	BOLT, FLANGE TORNILLO DE REBORDE	3	3	3			
25	67F–45127–00	SEAL SELLO DE GOMA	1	1	1			
26	6EK–45135–00	PIPE TUBO 1	1	1	1			

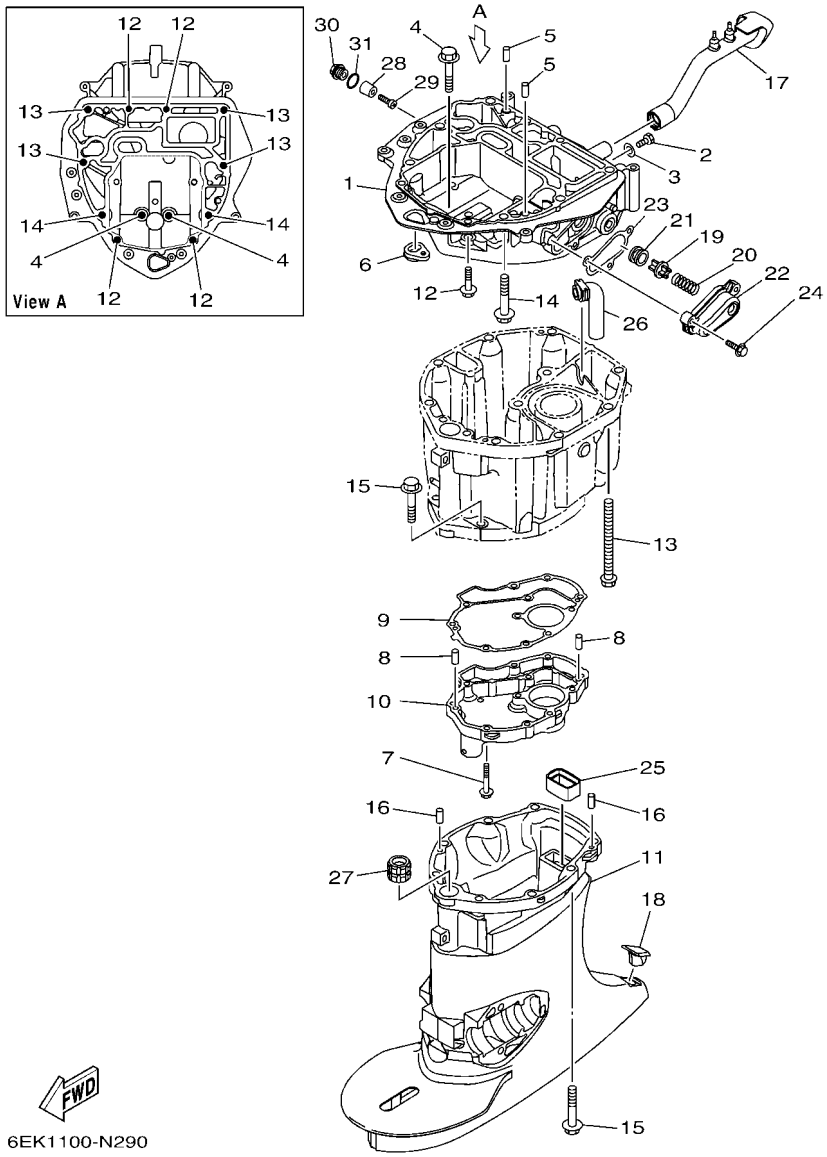

FIG. 32 UPPER CASING — FUNDA SUPERIOR

REF. NO.	PART NO. CODIGO Nº	DESCRIPTION DESCRIPCION	ET	EHT	6EL4			REMARKS OBSERVACIONES
27	6EK–45318–00	BUSHING, DRIVE SHAFT BUJE, EJE DE MANDO	1	1	1			X(25.3") X(25.3")
28	6G8–11325–00	ANODE ANODO	1	1	1			
29	98980–05025	SCREW, BIND TORNILLO DE LIGAR	1	1	1			
30	6G8–11197–A0	PLUG, BLIND TAPON CIEGO	1	1	1			
31	93210–13M63	O-RING ANILLO O	1	1	1			

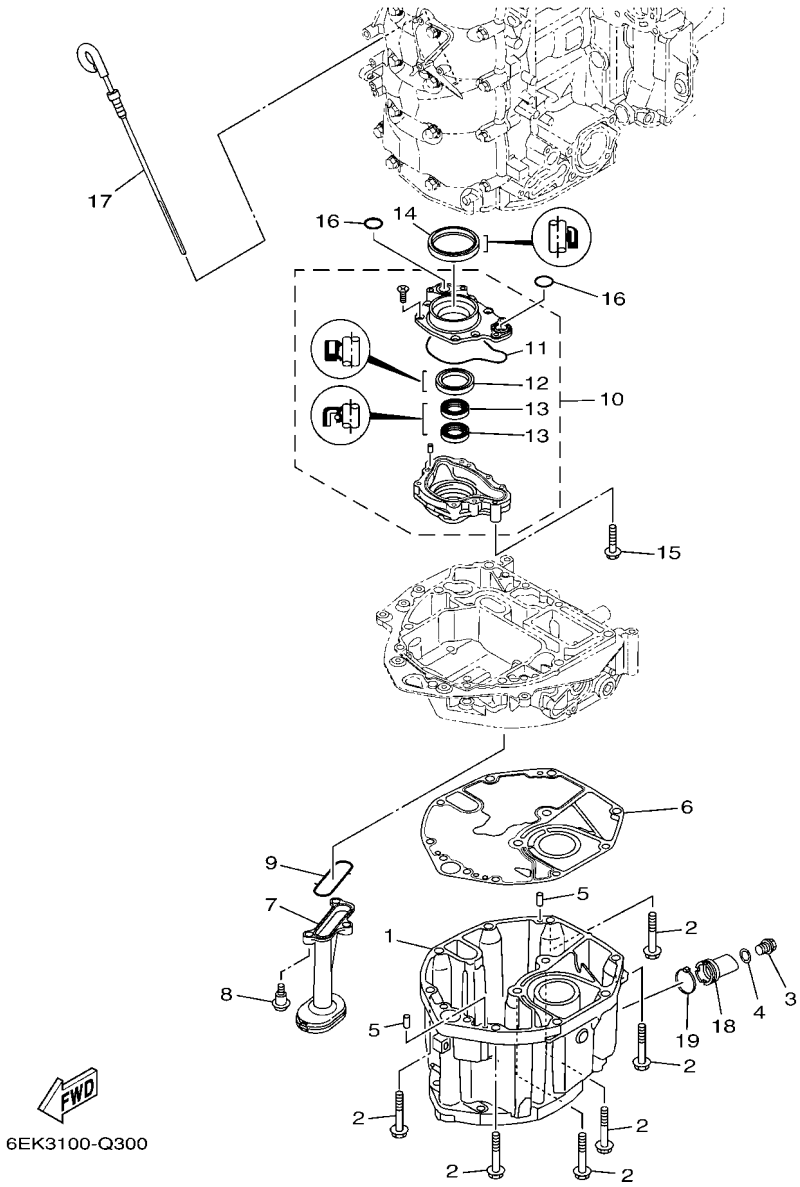

FIG. 33 OIL PAN

OIL PAN

REF. NO.	PART NO. CODIGO Nº	DESCRIPTION DESCRIPCION	ET	EHT	6EL4			REMARKS OBSERVACIONES
1	6EK–15311–01	OIL PAN BANDEJA DE ACEITE	1	1	1			
2	97575–10545	BOLT, WITH WASHER PERNO CON ARANDELA	6	6	6			
3	90340–14M06	PLUG, STRAIGHT SCREW TORNILLO, DE DRENAJE	1	1	1			
4	90430–14M09	GASKET JUNTA	1	1	1			
5	93606–12019	PIN, DOWEL PASADOR DE CLAVIJA	2	2	2			
6	6EK–15312–00	GASKET, OIL PAN EMPAQ BANDEJA DE ACEITE	1	1	1			
7	67F–13411–00	STRAINER, OIL FILTRO DE ACEITE	1	1	1			
8	90109–06292	BOLT PERNO	3	3	3			
9	67F–13415–00	SEAL, OIL STRAINER SELLO COLADOR ACEITE	1	1	1			
10	6EK–13300–00	OIL PUMP ASSY BOMBA DE ACEITE COMPLETA	1	1	1			
11	6EK–13329–00	.GASKET, PUMP COVER .EMPAQUE TAPA DE BOMBA	1	1	1			
12	6AW–13119–00	.OIL SEAL .SELLO ACEITE	1	1	1			
13	69J–13631–00	.OIL SEAL .SELLO ACEITE	2	2	2			
14	69J–11355–00	SEAL, CYLINDER 1 RETEN ACEITE CILINDRO 1	1	1	1			
15	90105–06151	BOLT, FLANGE TORNILLO	4	4	4			
16	93210–19MJ1	O-RING ANILLO O	2	2	2			
17	6EK–15362–10	PLUG, OIL LEVEL TAPON DEL NIVEL DE ACEITE	1	1	1			
18	6EK–15316–00	DAMPER 1 AMORTIGUADOR 1	1	1	1			
19	90465–11M59	CLAMP BRIDA	1	1	1			

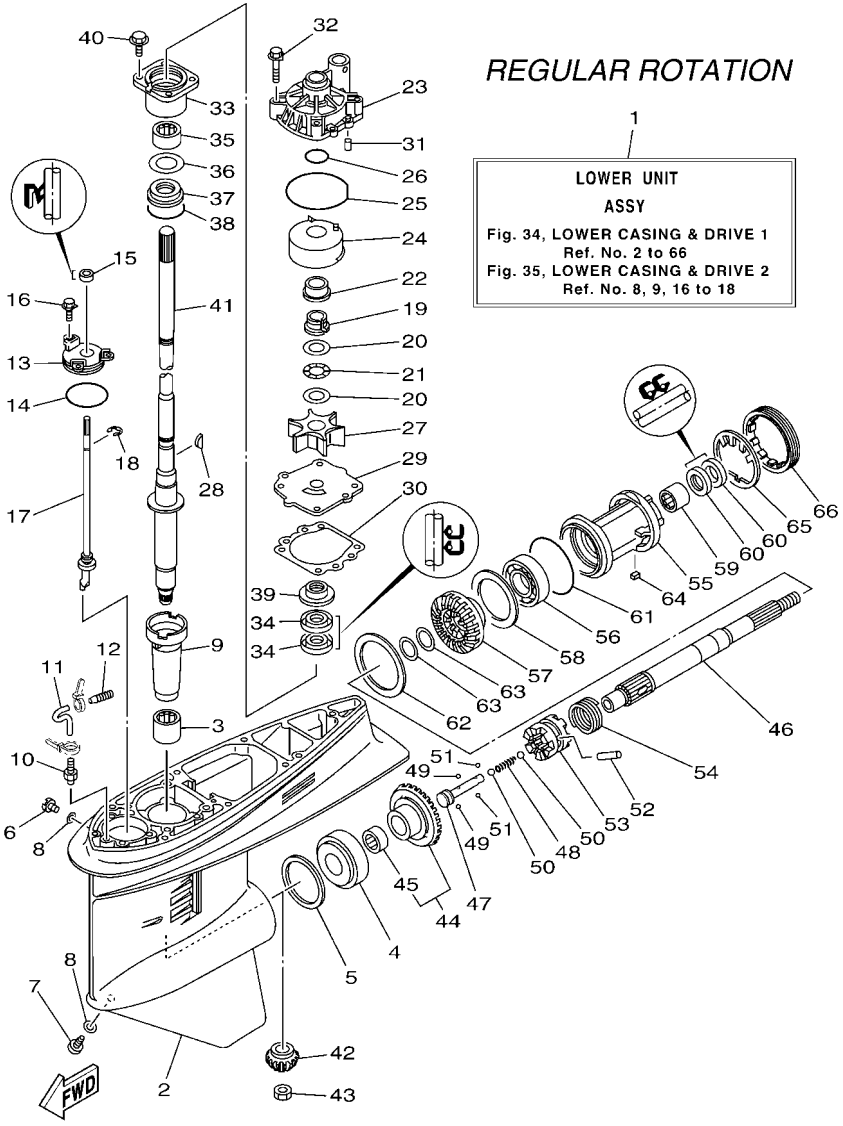

FIG. 34 LOWER CASING & DRIVE 1 — IMPULSOR E INFERIOR 1

REF. NO.	PART NO. CODIGO Nº	DESCRIPTION DESCRIPCION	ET	EHT	6EL4			REMARKS OBSERVACIONES
1	6EK–45300–00–8D	LOWER UNIT ASSY CONJUNTO UNIDAD INFERIOR	1					L(20.3"),RH L(20.3"),RH
	6EK–45300–10–8D	LOWER UNIT ASSY CONJUNTO UNIDAD INFERIOR	1	1				X(25.3"),RH X(25.3"),RH
2	6E5–45301–07–8D	CASING, LOWER FUNDA INFERIOR COMPLETA	1	1				
3	93315–628U9	BEARING COJINETE DE RODILLOS	1	1				
4	93332–000U7	BEARING COJINETE	1	1				
5	6E5–45567–01	SHIM (T:0.10MM) LAMINA(T:0.10MM)	1	1				UR UR
	6E5–45567–10	SHIM (T:0.12MM) LAINA (T:0.12MM)	1	1				UR UR
	6E5–45567–20	SHIM (T:0.15MM) LAINA (T:0.15MM)	1	1				UR UR
	6E5–45567–30	SHIM (T:0.18MM) LAINA (T:0.18MM)	1	1				UR UR
	6E5–45567–40	SHIM (T:0.30MM) LAINA (T:0.30MM)	1	1				UR UR
	6E5–45567–50	SHIM (T:0.40MM) LAINA (T:0.40MM)	1	1				UR UR
	6E5–45567–60	SHIM (T:0.50MM) LAINA (T:0.50MM)	1	1				UR UR
6	90340–08002	PLUG, STRAIGHT SCREW TORNILLO, DE DRENAJE	1	1				
7	688–45341–10	PLUG, DRAIN TAPON, DREN	1	1				
8	90430–08003	GASKET JUNTA	2	2				
9	6E5–45536–00	SLEEVE, DRIVE SHAFT CAMISA EJE DE MANDO	1	1				
10	6E5–45378–00	NIPPLE, HOSE NIPLE MANGUERA	1	1				
11	90445–07ME8	HOSE (L80) TUBO (L80)	1					L(20.3") L(20.3")
	90445–07ME9	HOSE (L120) TUBO (L120)	1	1				X(25.3") X(25.3")
12	6E5–83558–10	END, NIPPLE EXTREMO DE NIPLE	1	1				
13	6E5–45321–00	PLATE PLACA	1	1				
14	93210–58144	O-RING ANILLO O	1	1				
15	93106–09014	OIL SEAL SELLO ACEITE	1	1				
16	90119–06M10	BOLT, WITH WASHER TORNILLO CON ARANDELA	3	3				
17	6E5–44150–03	SHIFT CAM ASSY CONJUNTO EJE LEVA COMPL.	1	1				
18	99001–08600	CIRCLIP PRESILLA REDONDA	1	1				
19	61A–45538–00	SPACER 1 ESPACIADOR 1	1	1				

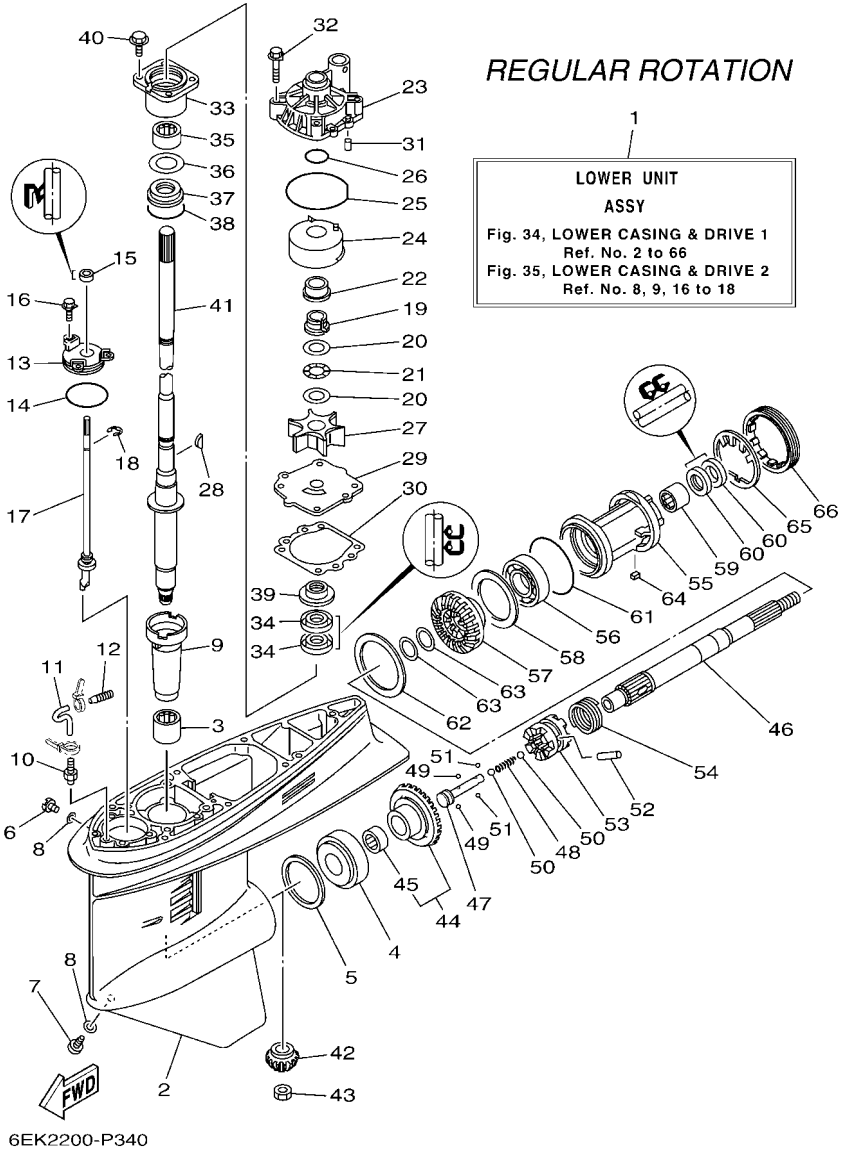

FIG. 34 LOWER CASING & DRIVE 1 — IMPULSOR E INFERIOR 1

REF. NO.	PART NO. CODIGO Nº	DESCRIPTION DESCRIPCION	ET	EHT	6EL4			REMARKS OBSERVACIONES
20	90201–22M01	WASHER, PLATE ARANDELA PLANA	2	2				
21	90206–22M19	WASHER, WAVE ARANDELA ONDULADA	1	1				
22	61A–45527–00	COLLAR, DRIVE SHAFT COLLAR EJE FLECHA DE PROPULSIO	1	1				
23	61A–44311–01	HOUSING, WATER PUMP CAJA BOMBA DE AGUA	1	1				
24	61A–44322–02	INSERT, CARTRIDGE CARTUCHO	1	1				
25	93210–86M38	O-RING ANILLO O	1	1				
26	93210–37160	O-RING ANILLO O	1	1				
27	6E5–44352–01	IMPELLER IMPULSOR	1	1				
28	90280–04M05	KEY, WOODRUFF CUNA WOODRUFF	1	1				
29	6EK–44323–00	OUTER PLATE, CARTRIDGE PLACA EXTERIOR DEL CARTUCHO	1	1				
30	6E5–44315–A0	GASKET, WATER PUMP EMPAQUE	1	1				
31	93606–12019	PIN, DOWEL PASADOR DE CLAVIJA	2	2				
32	90119–08M14	BOLT, WITH WASHER TORNILLO CON ARANDELA	4	4				
33	6E5–45331–00–9S	HOUSING, BEARING CAJA DE COJINETE	1	1				
34	93101–28M16	OIL SEAL SELLO ACEITE	2	2				
35	93317–330U2	BEARING COJINETE	1	1				
36	6E5–45587–01	SHIM (T:0.10MM) LAINA (T:0.10MM)	1	1				UR UR
	6E5–45587–10	SHIM (T:0.12MM) LAINA (T:0.12MM)	1	1				UR UR
	6E5–45587–20	SHIM (T:0.15MM) LAINA (T:0.15MM)	1	1				UR UR
	6E5–45587–30	SHIM (T:0.18MM) LAINA (T:0.18MM)	1	1				UR UR
	6E5–45587–40	SHIM (T:0.30MM) LAINA (T:0.30MM)	1	1				UR UR
	6E5–45587–50	SHIM (T:0.40MM) LAINA (T:0.40MM)	1	1				UR UR
	6E5–45587–60	SHIM (T:0.50MM) LAINA (T:0.50MM)	1	1				UR UR
37	93341–930V2	BEARING COJINETES CON RODAMIENTOS	1	1				
38	93210–55M14	O-RING ANILLO O	1	1				
39	6E5–45344–00	COVER, OIL SEAL CUBIERTA SELLO ACEITE	1	1				
40	97595–08525	BOLT, WITH WASHER PERNO CON ARANDELA	4	4				

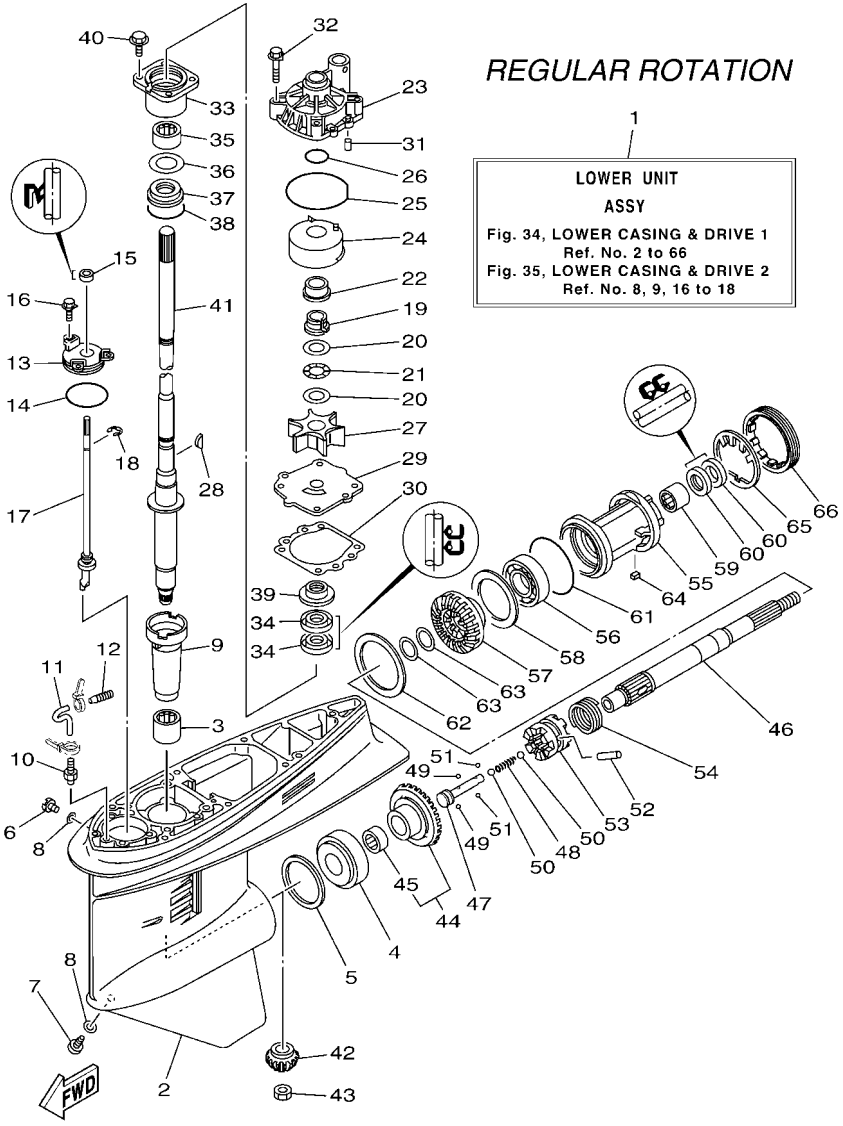

FIG. 34 LOWER CASING & DRIVE 1 — IMPULSOR E INFERIOR 1

REF. NO.	PART NO. CODIGO Nº	DESCRIPTION DESCRIPCION	ET	EHT	6EL4			REMARKS OBSERVACIONES
41	6EK–45501–00	DRIVE SHAFT COMP. EJE DE MANDO COMPL.	1					L(20.3") L(20.3")
	6EK–45501–10	DRIVE SHAFT COMP. EJE DE MANDO COMPL.	1	1				X(25.3") X(25.3")
42	68V–45551–00	PINION (13T) PINON (13T)	1	1				
43	90170–16M01	NUT TUERCA	1	1				
44	68V–45560–00	GEAR 1 (28T) ENGRANAJE 1 (28T)	1	1				
45	93315–425U7	.BEARING .COJINETE DE RODILLOS	1	1				
46	6E5–45611–01	SHAFT, PROPELLER EJE PROPUSOR	1	1				
47	6E5–45634–02	SLIDE, SHIFT DESLIZADOR, CAMBIO	1	1				
48	90501–16M37	SPRING, COMPRESSION RESORTE DE COMPRESION	1	1				
49	93507–32009	BALL ESFERA	2	2				
50	93511–32017	BALL ESFERA	2	2				
51	93503–16003	BALL ESFERA	2	2				
52	90250–08M07	PIN, STRAIGHT PASADOR CILINDRICO	1	1				
53	68V–45631–01	CLUTCH, DOG EMBRAGUE DE GARRA	1	1				
54	6E5–45633–01	RING, CROSS PIN ANILLO DE PASADOR	1	1				
55	6E5–45332–00–CA	HOUSING, BEARING CAJA BALERO 2	1	1				
56	93306–208U0	BEARING COJINETE	1	1				
57	68V–45571–00	GEAR 2 (28T) ENGRANAJE 2 (28T)	1	1				
58	6E5–45576–00	WASHER, THRUST 2 ARANDELA DE EMPUJE AXIAL 2	1	1				
59	93315–430U8	BEARING COJINETE DE RODILLOS	1	1				
60	93101–30M17	OIL SEAL SELLO ACEITE	2	2				
61	93210–86M39	O-RING ANILLO O	1	1				
62	6L6–45577–00	SHIM (T:0.10MM) LAINA (T:0.10MM)	1	1				UR UR
	6L6–45577–10	SHIM (T:0.12MM) LAINA (:0.12MM)	1	1				UR UR
	6L6–45577–20	SHIM (T:0.15MM) LAINA (T:0.15MM)	1	1				UR UR
	6L6–45577–30	SHIM (T:0.18MM) LAINA (T:0.18MM)	1	1				UR UR
	6L6–45577–40	SHIM (T:0.30MM) LAINA (T:0.30MM)	1	1				UR UR

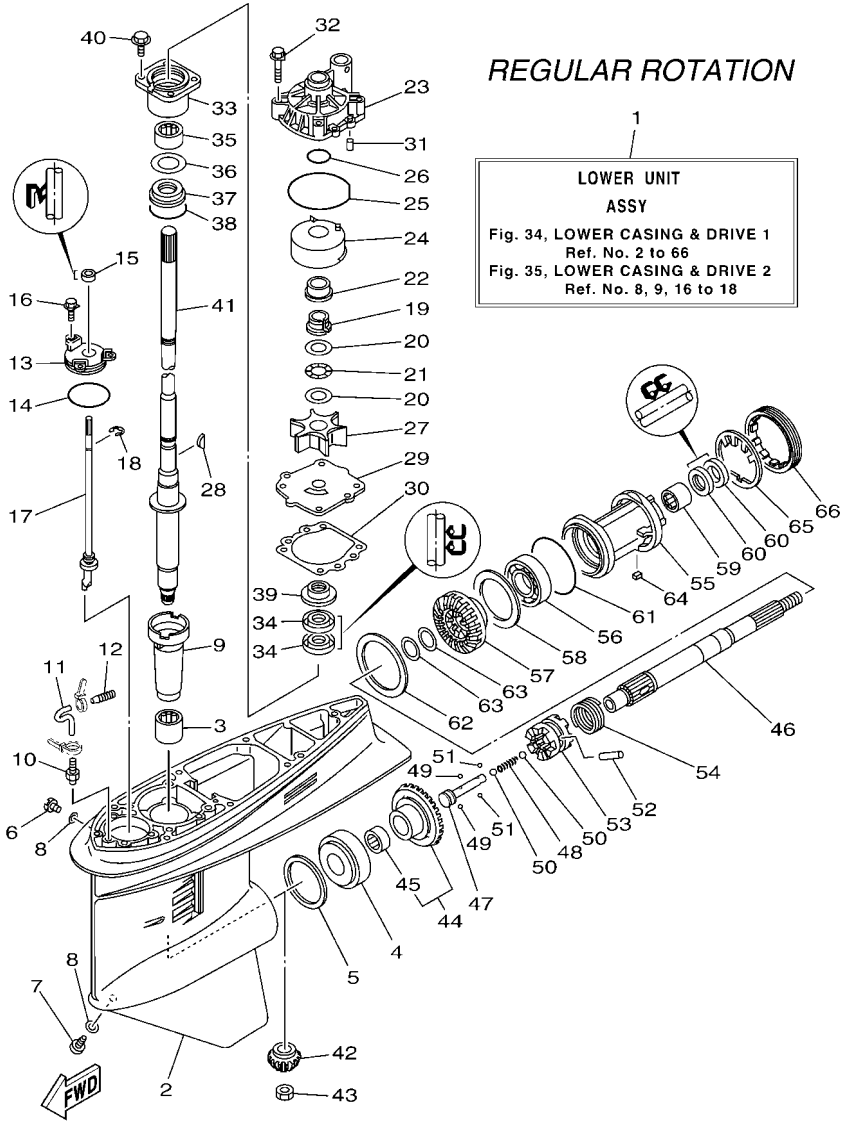

FIG. 34 LOWER CASING & DRIVE 1 — IMPULSOR E INFERIOR 1

REF. NO.	PART NO. CODIGO Nº	DESCRIPTION DESCRIPCION	ET	EHT	6EL4			REMARKS OBSERVACIONES
62	6L6–45577–50	SHIM (T:0.40MM) LAINA (T:0.40MM)	1	1				UR UR
	6L6–45577–60	SHIM (T:0.50MM) LAINA (T:0.50MM)	1	1				UR UR
63	90201–30M92	WASHER, PLATE ARANDELA PLANA	2	2				
64	90282–04010	KEY, STRAIGHT CHAVETA, RECTA	1	1				
65	688–45383–02	WASHER, CLAW ARANDELA DE UNA	1	1				
66	688–45384–02	NUT TUERCA	1	1				

FIG. 35 LOWER CASING & DRIVE 2 — IMPULSOR E INFERIOR 2

REGULAR ROTATION

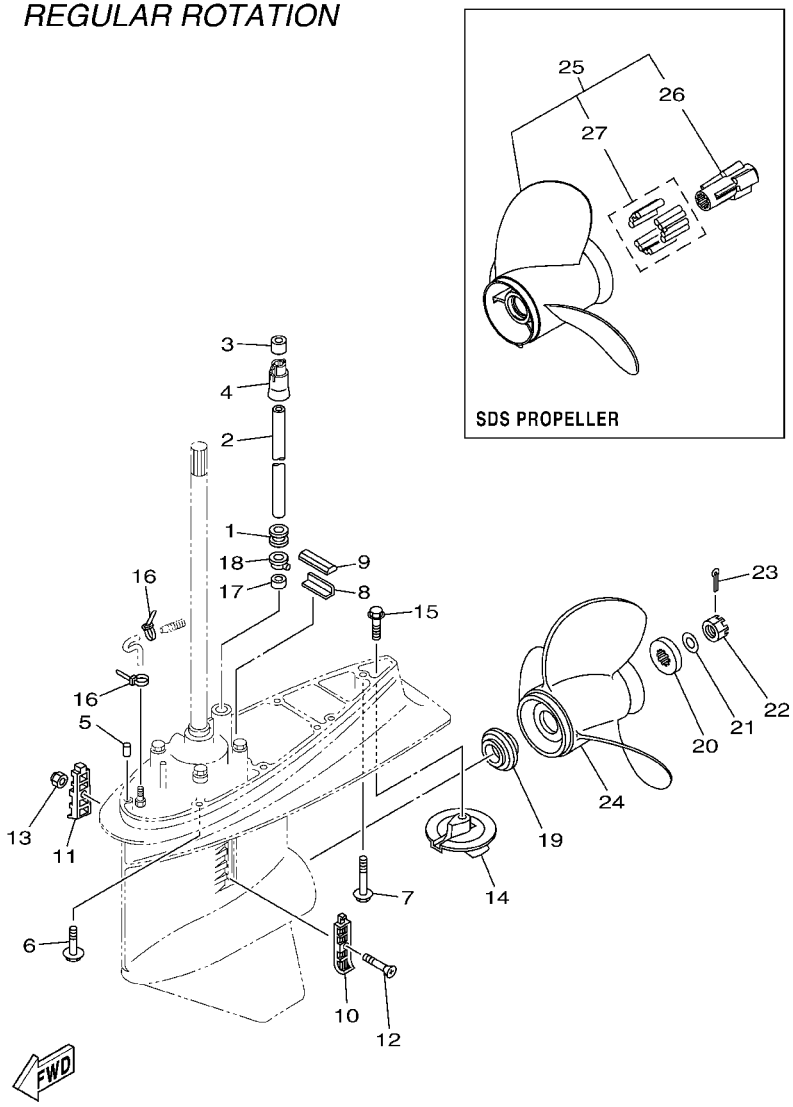

REF. NO.	PART NO. CODIGO Nº	DESCRIPTION DESCRIPCION	ET	EHT	6EL4			REMARKS OBSERVACIONES
1	6E5–44366–00	DAMPER, WATER SEAL 2 GOMA DEL SELLO DE AGUA 2	1	1				
2	90440–16001	PIPE (L167) TUBO (L167)	1					L(20.3") L(20.3")
	90440–16002	PIPE (L294) TUBO (L294)	1	1				X(25.3") X(25.3")
3	6EK–44365–01	DAMPER, WATER SEAL 1 HULE DE SELLO DE AGUA 1	1	1				
4	6EK–44379–00	GUIDE, WATER TUBE GUIA DE TUBO DE AGUA	1	1				
5	93608–12M05	PIN, DOWEL PASADOR DE CLAVIJA	2	2				
6	97595–10545	BOLT, WITH WASHER PERNO CON ARANDELA	6	6				
7	90119–10M89	BOLT, WITH WASHER TORNILLO CON ARANDELA	1	1				
8	663–45376–00	GUIDE, SEAL DAMPER GUIA DE SELLO GOMA	1	1				
9	688–45375–00	DAMPER, SEAL GOMA DE SELLO	1	1				
10	688–45214–02	COVER, WATER INLET 1 CUBIERTA ENTRADA AGUA 1	1	1				
11	688–45215–02	COVER, WATER INLET 2 CUBIERTA ENTRADA AGUA 2	1	1				
12	90152–05M07	SCREW, COUNTERSUNK TORNILLO EMBUTIDO	1	1				
13	90185–05002	NUT, NYLON TUERCA AUTOBLOCANTE	1	1				
14	6E5–45371–01	TAB-TRIM QUILLA ESTABILIZADOR	1	1				
15	90105–10M00	BOLT, FLANGE TORNILLO	1	1				
16	90465–11M10	CLAMP BRIDA	2	2				
17	6E5–44365–00	DAMPER, WATER SEAL 1 HULE DE SELLO DE AGUA 1	1	1				
18	6E5–44312–00	COVER, WATER PUMP HOUSING CUBIERTA CAJA BOMBA DE AGUA	1	1				
19	63P–45987–00	SPACER 1 ESPACIADOR 1	1	1				
20	688–45997–01	SPACER 2 ESPACIADOR 2	1	1				
21	92990–18200	WASHER ARANDELA PLANA	1	1				
22	90171–18M04	NUT, CASTLE TUERCA ENTALLADA	1	1				
23	91490–40030	PIN. COTTER CHAVETA	1	1				
24	6E5–45954–00	PROPELLER (3X14"X11"-K) PROPELA (3X14"X11"-K)	1	1				UR NORMAL PROP. UR NORMAL PROP.
	6E5–45949–00	PROPELLER (3X13-5/8"X13"-K) PROPELA (3X13-5/8"X13"-K)	1	1				UR NORMAL PROP. UR NORMAL PROP.
	688–45932–60	PROPELLER (3X13-1/2"X14"-K) PROPELA (3X13-1/2"X14"-K)	1	1				UR NORMAL PROP. UR NORMAL PROP.

FIG. 35 LOWER CASING & DRIVE 2 — IMPULSOR E INFERIOR 2

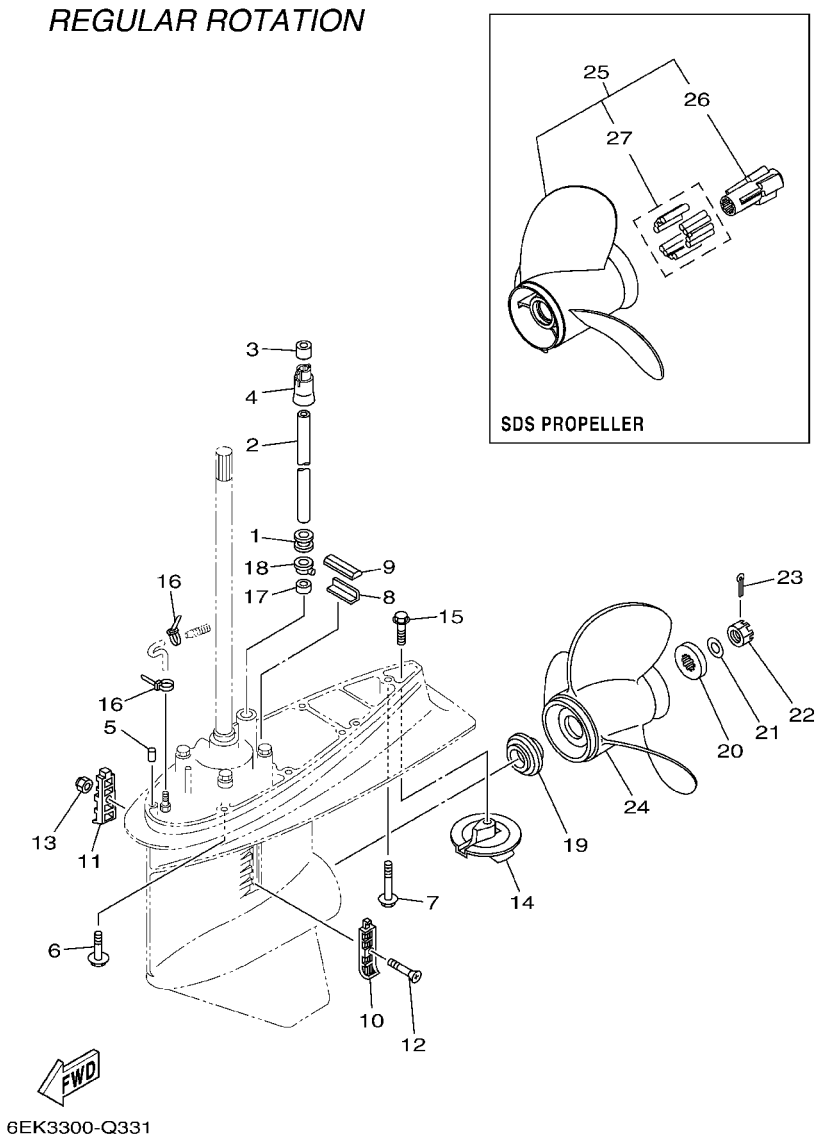

REF. NO.	PART NO. CODIGO Nº	DESCRIPTION DESCRIPCION	ET	EHT	6EL4			REMARKS OBSERVACIONES
24	6E5–45958–00	PROPELLER (3X13-5/8"X14"-K) PROPELA (3X13-5/8"X14"-K)	1	1				UR NORMAL PROP. UR NORMAL PROP.
	6E5–45947–00	PROPELLER (3X13-1/2"X15"-K) PROPELA (3X13-1/2"X15"-K)	1	1				UR NORMAL PROP. UR NORMAL PROP.
	688–45978–60	PROPELLER (3X13-1/2"X16"-K) PROPELA (3X13-1/2"X16"-K)	1	1				UR NORMAL PROP. UR NORMAL PROP.
	688–45930–02	PROPELLER (3X13"X17"-K2) PROPELA (3X13"X17"-K2)	1	1				UR NORMAL PROP. UR NORMAL PROP.
	6E5–45945–01	PROPELLER (3X13-1/4"X17"-K) PROPELA (3X13-1/4"X17"-K)	1	1				UR NORMAL PROP. UR NORMAL PROP.
	6E5–45941–00	PROPELLER (3X13"X19"-K) PROPELA (3X13"X19"-K)	1	1				UR NORMAL PROP. UR NORMAL PROP.
	688–45970–03	PROPELLER (3X13"X19"-K) PROPELA (3X13"X19"-K)	1	1				UR NORMAL PROP. UR NORMAL PROP.
	6E5–45943–00	PROPELLER (3X12-5/8"X21"-K) PROPELA (3X12-5/8"X21"-K)	1	1				UR NORMAL PROP. UR NORMAL PROP.
	688–45972–02	PROPELLER (3X13"X21"-K) PROPELA (3X13"X21"-K)	1	1				UR NORMAL PROP. UR NORMAL PROP.
	6E5–45952–00	PROPELLER (3X13"X23"-K) PROPELA (3X13"X23"-K)	1	1				UR NORMAL PROP. UR NORMAL PROP.
	688–45974–02	PROPELLER (3X13"X23"-K) PROPELA (3X13"X23"-K)	1	1				UR NORMAL PROP. UR NORMAL PROP.
	6E5–45956–00	PROPELLER (3X13"X25"-K) PROPELA (3X13"X25"-K)	1	1				UR NORMAL PROP. UR NORMAL PROP.
	688–45976–01	PROPELLER (3X13"X25"-K) PROPELA (3X13"X25"-K)	1	1				UR NORMAL PROP. UR NORMAL PROP.
25	6EK–45941–00	PROPELLER (3X13-1/2"X9"-K) PROPELA (3X13-1/2"X9"-K)	1	1				UR SDS PROP. UR SDS PROP.
	6EK–45943–00	PROPELLER (3X13-1/2"X10-1/2"-K PROPELA (3X13-1/2"X10-1/2"-K)	1	1				UR SDS PROP. UR SDS PROP.
	6EK–45945–00	PROPELLER (3X13-1/2"X12"-K) PROPELA (3X13-1/2"X12"-K)	1	1				UR SDS PROP. UR SDS PROP.
	6EK–45947–00	PROPELLER (3X13-1/2"X14"-K) PROPELA (3X13-1/2"X14"-K)	1	1				UR SDS PROP. UR SDS PROP.
	6EK–45949–00	PROPELLER (3X13-1/2"X16"-K) PROPELA (3X13-1/2"X16"-K)	1	1				UR SDS PROP. UR SDS PROP.
26	6EK–45982–00	.BUSH, PROPELLER .BUJE DE PROPELA	1	1				
27	6EK–45C82–09	.DAMPER RUBBER, PROPELLER 2 .AMORTIGUADOR PROPELA 2	1	1				

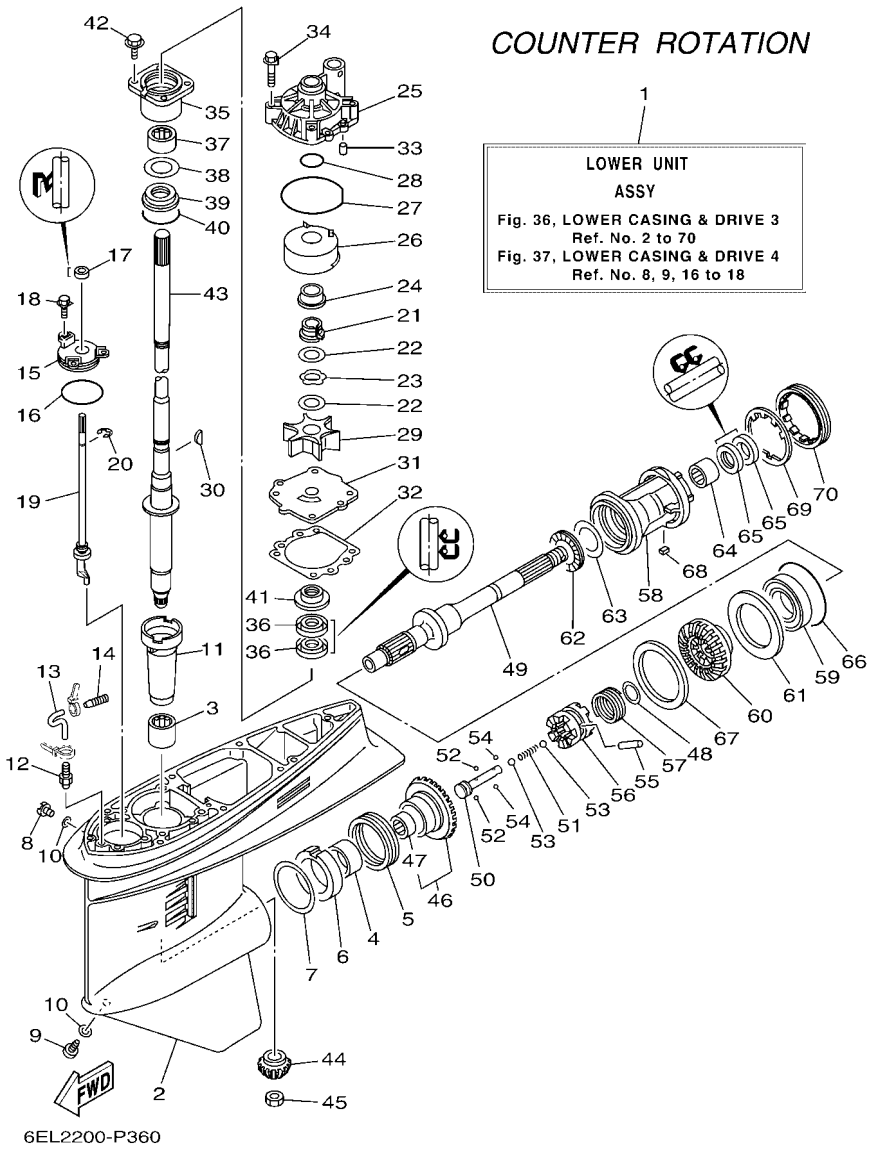

FIG. 36 LOWER CASING & DRIVE 3 — IMPULSOR E INFERIOR 3

REF. NO.	PART NO. CODIGO Nº	DESCRIPTION DESCRIPCION	ET	EHT	6EL4			REMARKS OBSERVACIONES
1	6EL–45300–10–8D	LOWER UNIT ASSY CONJUNTO UNIDAD INFERIOR			1			X(25.3"),LH X(25.3"),LH
2	6E5–45301–07–8D	CASING, LOWER FUNDA INFERIOR COMPLETA			1			
3	93315–628U9	BEARING COJINETE DE RODILLOS			1			
4	93315–345W0	BEARING COJINETE DE RODILLOS			1			
5	93341–360U8	BEARING COJINETES CON RODAMIENTOS			1			
6	6L6–45538–00	SPACER 1 ESPACIADOR 1			1			
7	6E5–45567–01	SHIM (T:0.10MM) LAMINA(T:0.10MM)			1			UR UR
	6E5–45567–10	SHIM (T:0.12MM) LAINA (T:0.12MM)			1			UR UR
	6E5–45567–20	SHIM (T:0.15MM) LAINA (T:0.15MM)			1			UR UR
	6E5–45567–30	SHIM (T:0.18MM) LAINA (T:0.18MM)			1			UR UR
	6E5–45567–40	SHIM (T:0.30MM) LAINA (T:0.30MM)			1			UR UR
	6E5–45567–50	SHIM (T:0.40MM) LAINA (T:0.40MM)			1			UR UR
	6E5–45567–60	SHIM (T:0.50MM) LAINA (T:0.50MM)			1			UR UR
8	90340–08002	PLUG, STRAIGHT SCREW TORNILLO, DE DRENAJE			1			
9	688–45341–10	PLUG, DRAIN TAPON, DREN			1			
10	90430–08003	GASKET JUNTA			2			
11	6E5–45536–00	SLEEVE, DRIVE SHAFT CAMISA EJE DE MANDO			1			
12	6E5–45378–00	NIPPLE, HOSE NIPLE MANGUERA			1			
13	90445–07ME9	HOSE (L120) TUBO (L120)			1			X(25.3") X(25.3")
14	6E5–83558–10	END, NIPPLE EXTREMO DE NIPLE			1			
15	6E5–45321–00	PLATE PLACA			1			
16	93210–58144	O-RING ANILLO O			1			
17	93106–09014	OIL SEAL SELLO ACEITE			1			
18	90119–06M10	BOLT, WITH WASHER TORNILLO CON ARANDELA			3			
19	6L6–44150–02	SHIFT CAM ASSY CONJUNTO EJE LEVA COMPL.			1			
20	99001–08600	CIRCLIP PRESILLA REDONDA			1			
21	61A–45538–00	SPACER 1 ESPACIADOR 1			1			

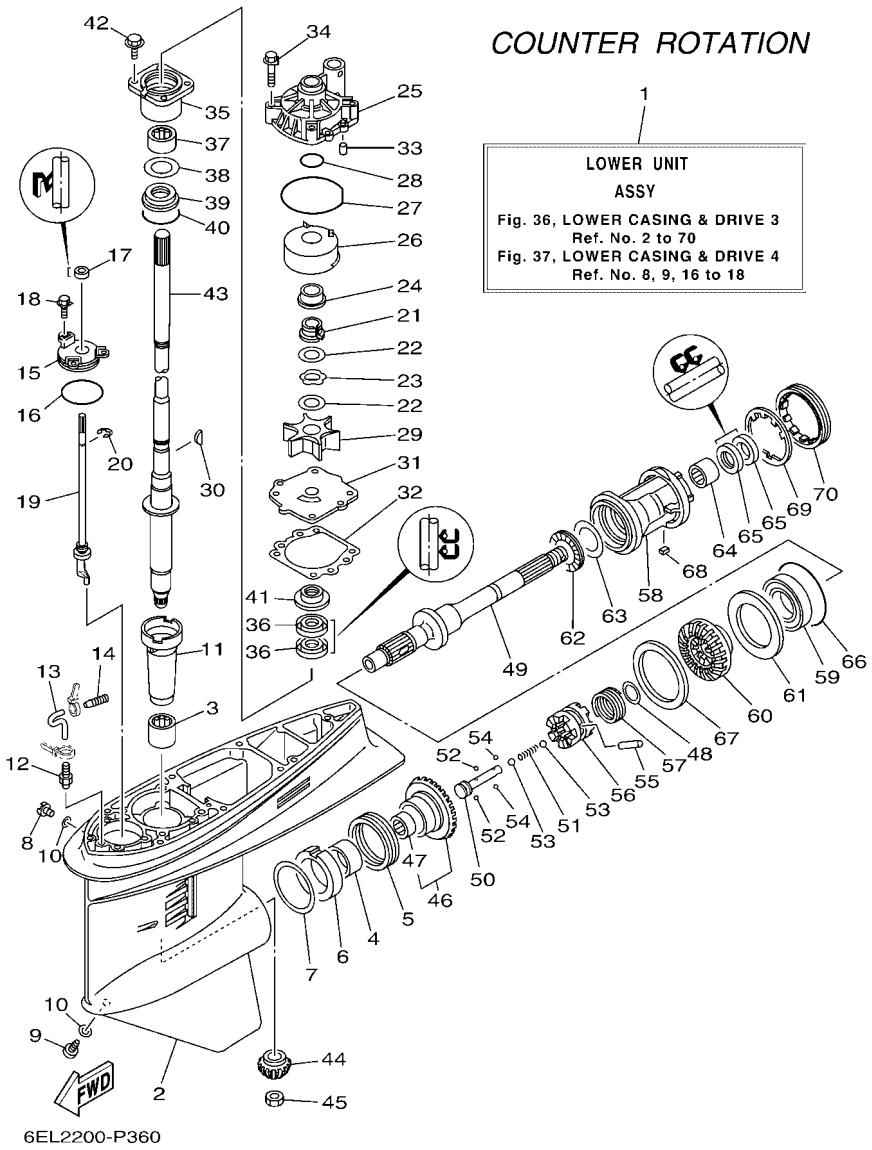

FIG. 36 LOWER CASING & DRIVE 3 — IMPULSOR E INFERIOR 3

REF. NO.	PART NO. CODIGO Nº	DESCRIPTION DESCRIPCION	ET	EHT	6EL4			REMARKS OBSERVACIONES
22	90201–22M01	WASHER, PLATE ARANDELA PLANA			2			
23	90206–22M19	WASHER, WAVE ARANDELA ONDULADA			1			
24	61A–45527–00	COLLAR, DRIVE SHAFT COLLAR EJE FLECHA DE PROPULSIO			1			
25	61A–44311–01	HOUSING, WATER PUMP CAJA BOMBA DE AGUA			1			
26	61A–44322–02	INSERT, CARTRIDGE CARTUCHO			1			
27	93210–86M38	O-RING ANILLO O			1			
28	93210–37160	O-RING ANILLO O			1			
29	6E5–44352–01	IMPELLER IMPULSOR			1			
30	90280–04M05	KEY, WOODRUFF CUNA WOODRUFF			1			
31	6EK–44323–00	OUTER PLATE, CARTRIDGE PLACA EXTERIOR DEL CARTUCHO			1			
32	6E5–44315–A0	GASKET, WATER PUMP EMPAQUE			1			
33	93606–12019	PIN, DOWEL PASADOR DE CLAVIJA			2			
34	90119–08M14	BOLT, WITH WASHER TORNILLO CON ARANDELA			4			
35	6E5–45331–00–9S	HOUSING, BEARING CAJA DE COJINETE			1			
36	93101–28M16	OIL SEAL SELLO ACEITE			2			
37	93317–330U2	BEARING COJINETE			1			
38	6E5–45587–01	SHIM (T:0.10MM) LAINA (T:0.10MM)			1			UR UR
	6E5–45587–10	SHIM (T:0.12MM) LAINA (T:0.12MM)			1			UR UR
	6E5–45587–20	SHIM (T:0.15MM) LAINA (T:0.15MM)			1			UR UR
	6E5–45587–30	SHIM (T:0.18MM) LAINA (T:0.18MM)			1			UR UR
	6E5–45587–40	SHIM (T:0.30MM) LAINA (T:0.30MM)			1			UR UR
	6E5–45587–50	SHIM (T:0.40MM) LAINA (T:0.40MM)			1			UR UR
	6E5–45587–60	SHIM (T:0.50MM) LAINA (T:0.50MM)			1			UR UR
39	93341–930V2	BEARING COJINETES CON RODAMIENTOS			1			
40	93210–55M14	O-RING ANILLO O			1			
41	6E5–45344–00	COVER, OIL SEAL CUBIERTA SELLO ACEITE			1			
42	97595–08525	BOLT, WITH WASHER PERNO CON ARANDELA			4			

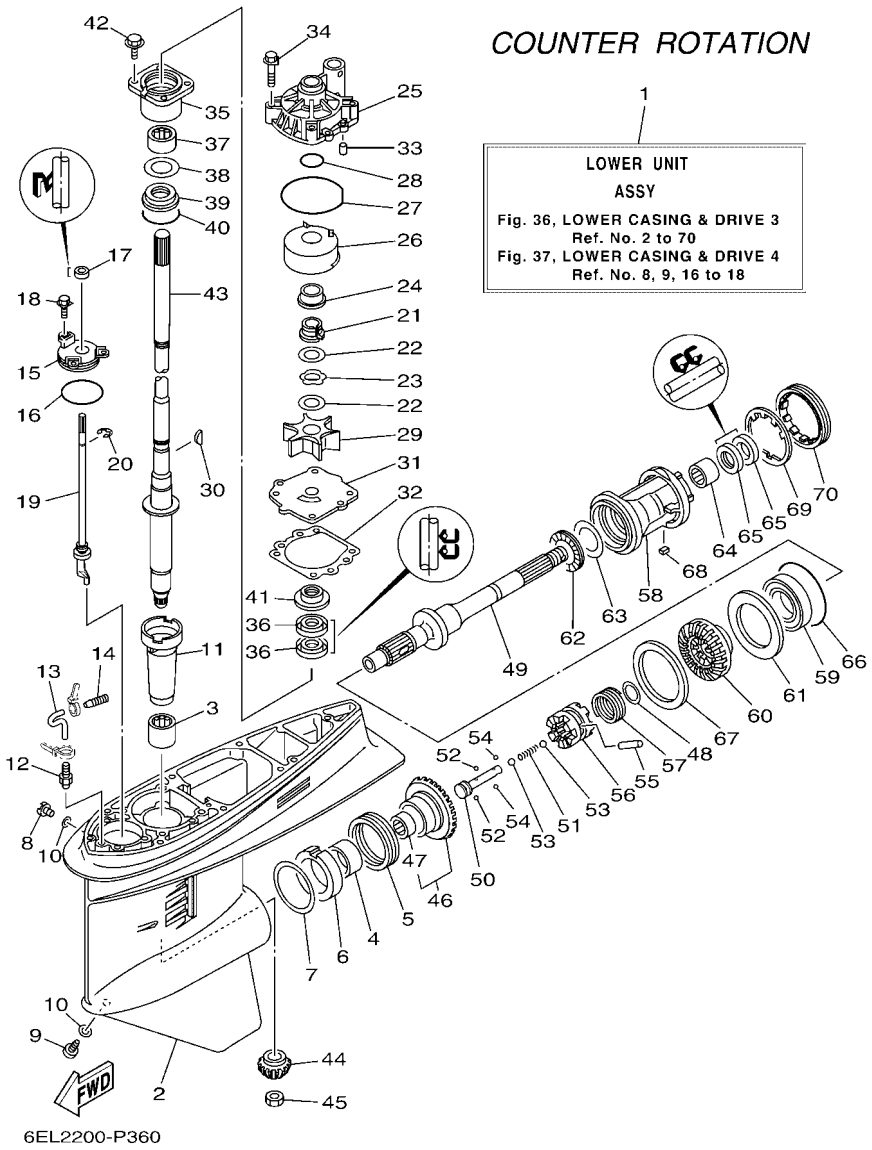

FIG. 36 LOWER CASING & DRIVE 3 — IMPULSOR E INFERIOR 3

REF. NO.	PART NO. CODIGO Nº	DESCRIPTION DESCRIPCION	ET	EHT	6EL4			REMARKS OBSERVACIONES
43	6EK–45501–10	DRIVE SHAFT COMP. EJE DE MANDO COMPL.			1			X(25.3") X(25.3")
44	68V–45551–00	PINION (13T) PINON (13T)			1			
45	90170–16M01	NUT TUERCA			1			
46	68W–45560–00	GEAR 1 (28T) ENGRANAJE 1 (28T)			1			
47	93315–425U7	.BEARING .COJINETE DE RODILLOS			1			
48	90201–26M00	WASHER, PLATE ARANDELA PLANA			1			
49	68W–45611–00	SHAFT, PROPELLER EJE PROPUSOR			1			
50	6E5–45634–02	SLIDE, SHIFT DESLIZADOR, CAMBIO			1			
51	90501–16M37	SPRING, COMPRESSION RESORTE DE COMPRESION			1			
52	93507–32009	BALL ESFERA			2			
53	93511–32017	BALL ESFERA			2			
54	93503–16003	BALL ESFERA			2			
55	90250–08M07	PIN, STRAIGHT PASADOR CILINDRICO			1			
56	68V–45631–01	CLUTCH, DOG EMBRAGUE DE GARRA			1			
57	6E5–45633–01	RING, CROSS PIN ANILLO DE PASADOR			1			
58	6L6–45332–00–CA	HOUSING, BEARING CAJA BALERO 2			1			
59	93332–000V7	BEARING COJINETE			1			
60	68W–45570–10	GEAR 2 (28T) ENGRANAJE 2 (28T)			1			
61	6L6–45576–00	WASHER, THRUST 2 ARANDELA DE EMPUJE AXIAL 2			1			
62	93341–440U5	BEARING COJINETES CON RODAMIENTOS			1			
63	6K1–45578–01	SHIM (T:0.10MM) LAINA (T:0.10MM)			1			UR UR
	6K1–45578–10	SHIM (T:0.12MM) LAINA (:0.12MM)			1			UR UR
	6K1–45578–20	SHIM (T:0.15MM) LAINA (T:0.15MM)			1			UR UR
	6K1–45578–30	SHIM (T:0.18MM) LAINA (T:0.18MM)			1			UR UR
	6K1–45578–40	SHIM (T:0.30MM) LAINA (T:0.30MM)			1			UR UR
	6K1–45578–50	SHIM (T:0.40MM) LAINA (T:0.40MM)			1			UR UR
	6K1–45578–60	SHIM (T:0.50MM) LAINA (T:0.50MM)			1			UR UR

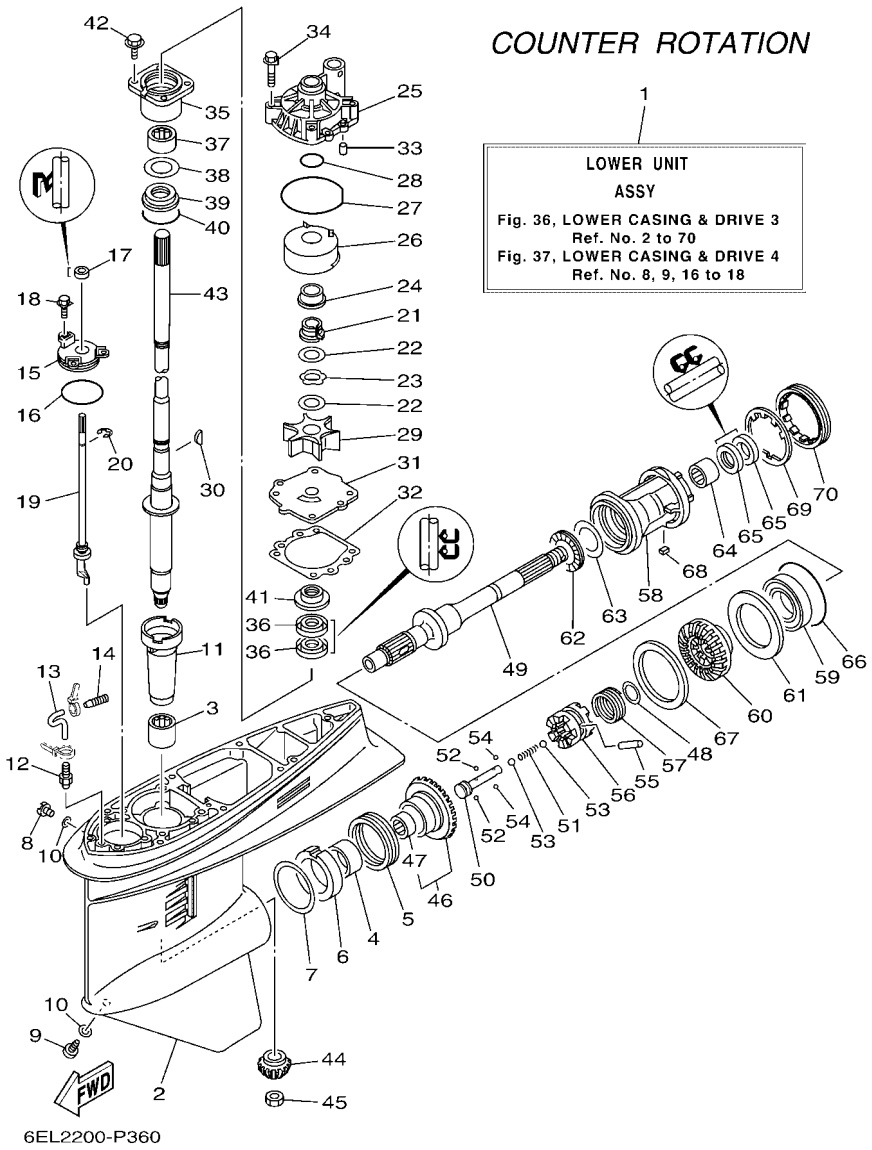

FIG. 36 LOWER CASING & DRIVE 3 — IMPULSOR E INFERIOR 3

REF. NO.	PART NO. CODIGO Nº	DESCRIPTION DESCRIPCION	ET	EHT	6EL4			REMARKS OBSERVACIONES
64	93315–43061	BEARING COJINETE DE RODILLOS			1			
65	93101–30M17	OIL SEAL SELLO ACEITE			2			
66	93210–86M39	O-RING ANILLO O			1			
67	6L6–45577–00	SHIM (T:0.10MM) LAINA (T:0.10MM)			1			UR UR
	6L6–45577–10	SHIM (T:0.12MM) LAINA (:0.12MM)			1			UR UR
	6L6–45577–20	SHIM (T:0.15MM) LAINA (T:0.15MM)			1			UR UR
	6L6–45577–30	SHIM (T:0.18MM) LAINA (T:0.18MM)			1			UR UR
	6L6–45577–40	SHIM (T:0.30MM) LAINA (T:0.30MM)			1			UR UR
	6L6–45577–50	SHIM (T:0.40MM) LAINA (T:0.40MM)			1			UR UR
	6L6–45577–60	SHIM (T:0.50MM) LAINA (T:0.50MM)			1			UR UR
68	90282–04010	KEY, STRAIGHT CHAVETA, RECTA			1			
69	688–45383–02	WASHER, CLAW ARANDELA DE UNA			1			
70	688–45384–02	NUT TUERCA			1			

FIG. 37 LOWER CASING & DRIVE 4 — IMPULSOR E INFERIOR 4

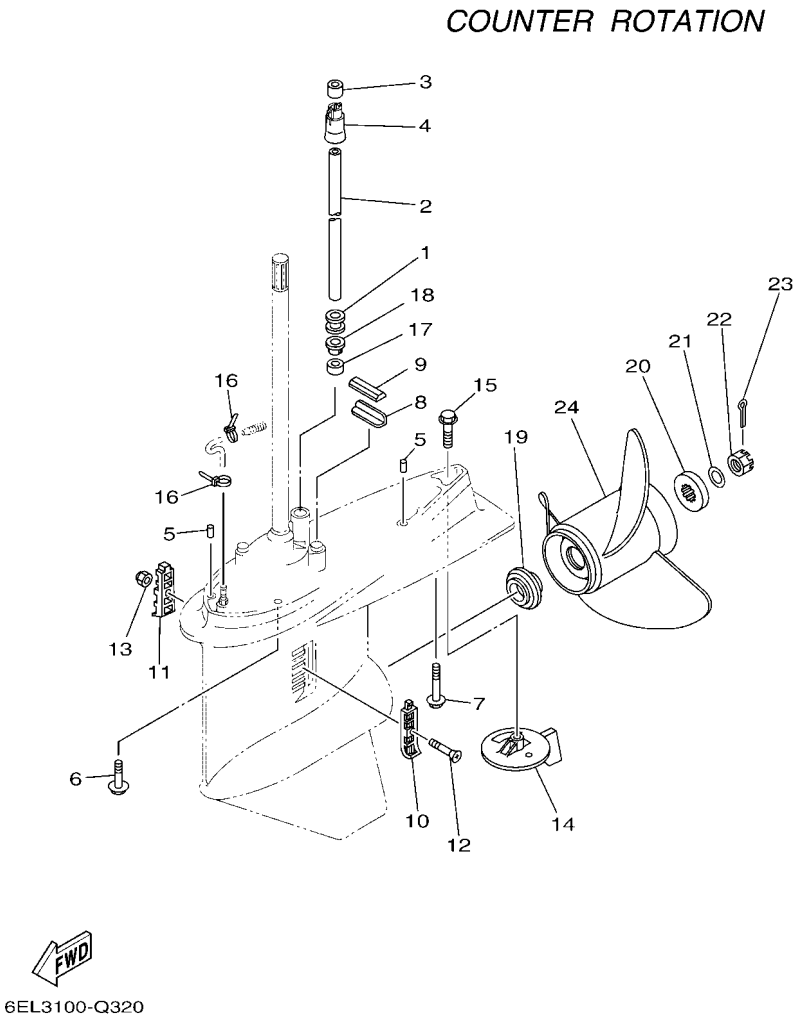

REF. NO.	PART NO. CODIGO Nº	DESCRIPTION DESCRIPCION	ET	EHT	6EL4			REMARKS OBSERVACIONES
1	6E5–44366–00	DAMPER, WATER SEAL 2 GOMA DEL SELLO DE AGUA 2			1			
2	90440–16002	PIPE (L294) TUBO (L294)			1			X(25.3") X(25.3")
3	6EK–44365–01	DAMPER, WATER SEAL 1 HULE DE SELLO DE AGUA 1			1			
4	6EK–44379–00	GUIDE, WATER TUBE GUIA DE TUBO DE AGUA			1			
5	93608–12M05	PIN, DOWEL PASADOR DE CLAVIJA			2			
6	97595–10545	BOLT, WITH WASHER PERNO CON ARANDELA			6			
7	90119–10M89	BOLT, WITH WASHER TORNILLO CON ARANDELA			1			
8	663–45376–00	GUIDE, SEAL DAMPER GUIA DE SELLO GOMA			1			
9	688–45375–00	DAMPER, SEAL GOMA DE SELLO			1			
10	688–45214–02	COVER, WATER INLET 1 CUBIERTA ENTRADA AGUA 1			1			
11	688–45215–02	COVER, WATER INLET 2 CUBIERTA ENTRADA AGUA 2			1			
12	90152–05M07	SCREW, COUNTERSUNK TORNILLO EMBUTIDO			1			
13	90185–05002	NUT, NYLON TUERCA AUTOBLOCANTE			1			
14	6L6–45371–00	TAB-TRIM QUILLA ESTABILIZADOR			1			
15	90105–10M00	BOLT, FLANGE TORNILLO			1			
16	90465–11M10	CLAMP BRIDA			2			
17	6E5–44365–00	DAMPER, WATER SEAL 1 HULE DE SELLO DE AGUA 1			1			
18	6E5–44312–00	COVER, WATER PUMP HOUSING CUBIERTA CAJA BOMBA DE AGUA			1			
19	63P–45987–00	SPACER 1 ESPACIADOR 1			1			
20	688–45997–01	SPACER 2 ESPACIADOR 2			1			
21	92990–18200	WASHER ARANDELA PLANA			1			
22	90171–18M04	NUT, CASTLE TUERCA ENTALLADA			1			
23	91490–40030	PIN. COTTER CHAVETA			1			
24	6L6–45930–01	PROPELLER (3X13"X17"-KL) PROPELA (3X13"X17"-KL)			1			UR UR
	6L6–45970–00	PROPELLER (3X13"X19"-KL) PROPELA (3X13"X19"-KL)			1			UR UR
	6L6–45972–00	PROPELLER (3X13"X21"-KL) PROPELA (3X13"X21"-KL)			1			UR UR

FIG. 38 STEERING GUIDE — DIRECCIONGUIAR

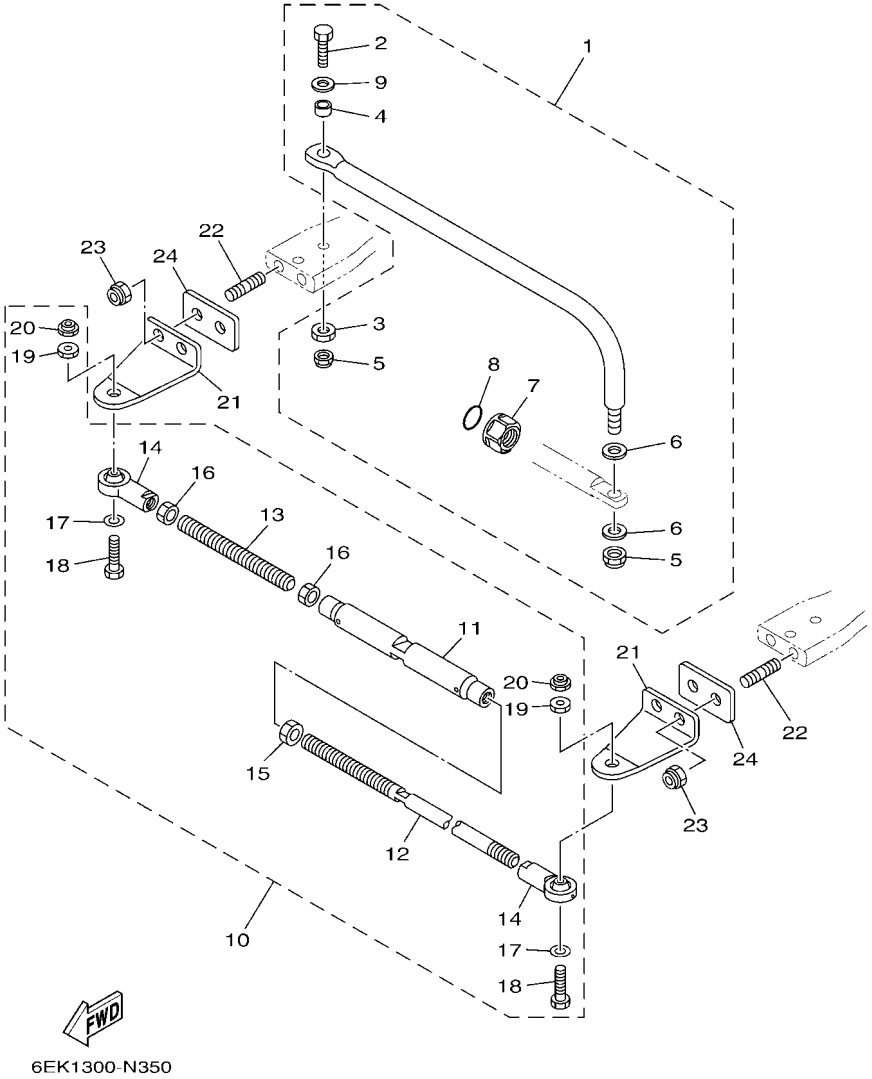

REF. NO.	PART NO. CODIGO Nº	DESCRIPTION DESCRIPCION	ET	EHT	6EL4			REMARKS OBSERVACIONES
1	6EK–61350–00	STEERING GUIDE ATTACHMENT KIT ESTUCHE ADITAMENTO GUIA DE TIM	1					AP AP
2	6E5–61355–00	.BOLT .TORNILLO	1					
3	90170–09M03	.NUT .TUERCA	1					
4	90387–10M42	.COLLAR .ESPACIADOR	1					
5	90185–09M01	.NUT, SELF-LOCKING .TUERCA AUTOBLOCANTE	2					
6	90201–10M20	.WASHER, PLATE .ARANDELA PLANA	2					
7	6E5–43145–01	.CAP, CLAMP BRACKET .TAPA	1					
8	93210–16275	.O-RING .ANILLO O	1					
9	90201–10M63	.WASHER, PLATE .ARANDELA PLANA	1					
10	6E5–61301–01	TWIN KIT (L:600-800MM) KIT ADITAMENTO (L:600-800MM)			1			AP AP
11	6E5–61313–00	.ADJUSTER .AJUSTADOR			1			
12	6E5–61311–11	.TIE BAR .BARRA SEPARADORA			1			
13	6E5–61315–00	.TIE BAR .ROTOR DE BOMBA AGUA			1			
14	6E5–61303–00	.STEERING AXLE COMP. .OJO-DIRECCION COMPL.			2			
15	90170–14M06	.NUT .TUERCA			1			
16	95380–14700	.NUT .TUERCA			2			
17	90201–10M76	.WASHER, PLATE .ARANDELA PLANA			2			
18	90101–09M70	.BOLT .TORNILLO			2			
19	90170–09M05	.NUT .TUERCA			2			
20	90185–09M01	.NUT, SELF-LOCKING .TUERCA AUTOBLOCANTE			2			
21	688–48511–02	HOOK, STEERING GANCHO DIRECCION			2			AP AP
22	90116–10063	BOLT, STUD ESPARRAGO			4			AP AP
23	90185–10027	NUT, SELF-LOCKING TUERCA AUTOBLOCANTE			4			AP AP
24	6EK–42121–00	BRACKET SOPORTE			2			AP AP

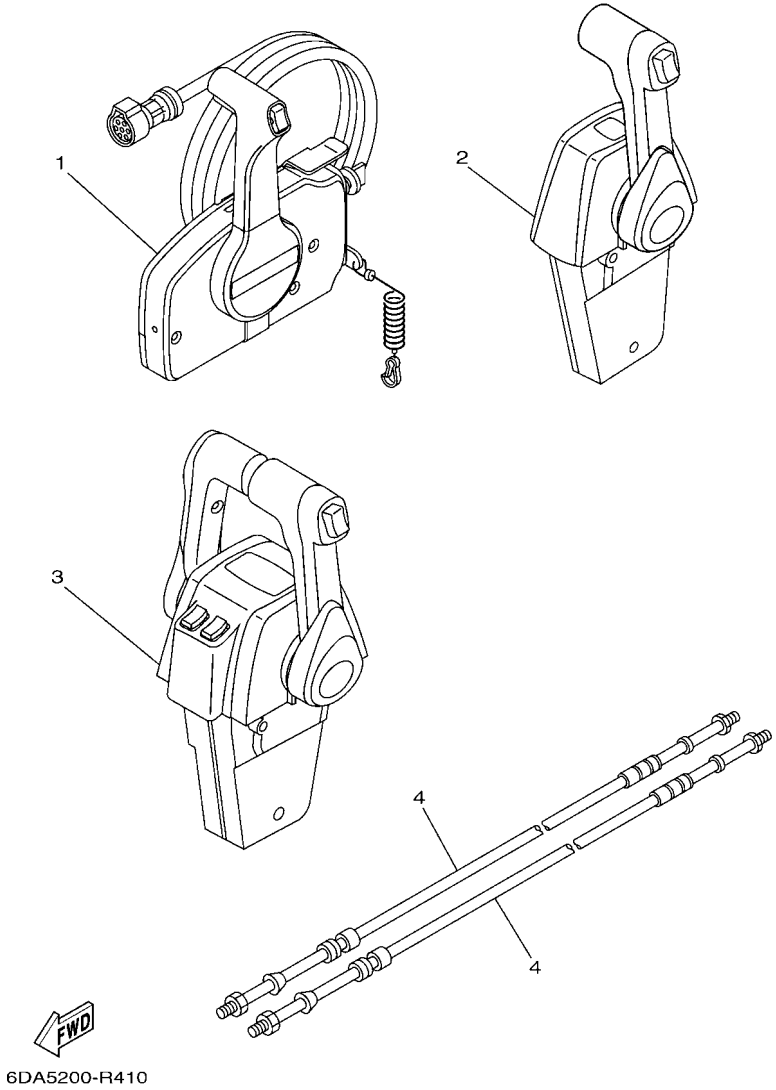

FIG. 39 REMOTE CONTROL BOX — CONTROL REMOTO COMPLETO

REF. NO.	PART NO. CODIGO Nº	DESCRIPTION DESCRIPCION	ET	EHT	6EL4			REMARKS OBSERVACIONES
1	703–48205–22	REMOTE CONTROL ASSY (10P, PTT) REMOTO CONTROL COMPL. (10P)	1					AP CHN,OTH WITH PT/T SW. AP CHN,OTH WITH PT/T SW.
	703–48207–22	REMOTE CONTROL ASSY (10P, PTT) REMOTO CONTROL COMPL. (10P)	1					AP BRA WITH PT/T SW. AP BRA WITH PT/T SW.
2	704–48205–R0	REMOTE CONTROL ASSY (R/H) REMOTO CONTROL COMPL. (R/H)	1					AP CAR WITH PT/T SW. AP CAR WITH PT/T SW.
3	704–48207–R0	REMOTE CONTROL ASSY REMOTO CONTROL COMPL.			1			AP CAR,OTH,BRA WITH PT/T SW. AP CAR,OTH,BRA WITH PT/T SW.
4	701–48320–50	CABLE, REMOTE CONTROL L=15F CABLE CONTROL REMOTO L=15F	2		2			UR UR
	701–48320–60	CABLE, REMOTE CONTROL L=16F CABLE CONTROL REMOTO L=16F	2		2			UR UR
	701–48320–80	CABLE, REMOTE CONTROL L=17F CABLE CONTROL REMOTO L=17F	2		2			UR UR
	701–48350–00	CABLE, REMOTE CONTROL L=21F CABLE CONTROL REMOTO L=21F	2		2			UR UR
	701–48350–20	CABLE, REMOTE CONTROL L=23F CABLE CONTROL REMOTO L=23F	2		2			UR UR
	701–48350–30	CABLE, REMOTE CONTROL L=24F CABLE CONTROL REMOTO L=24F	2		2			UR UR

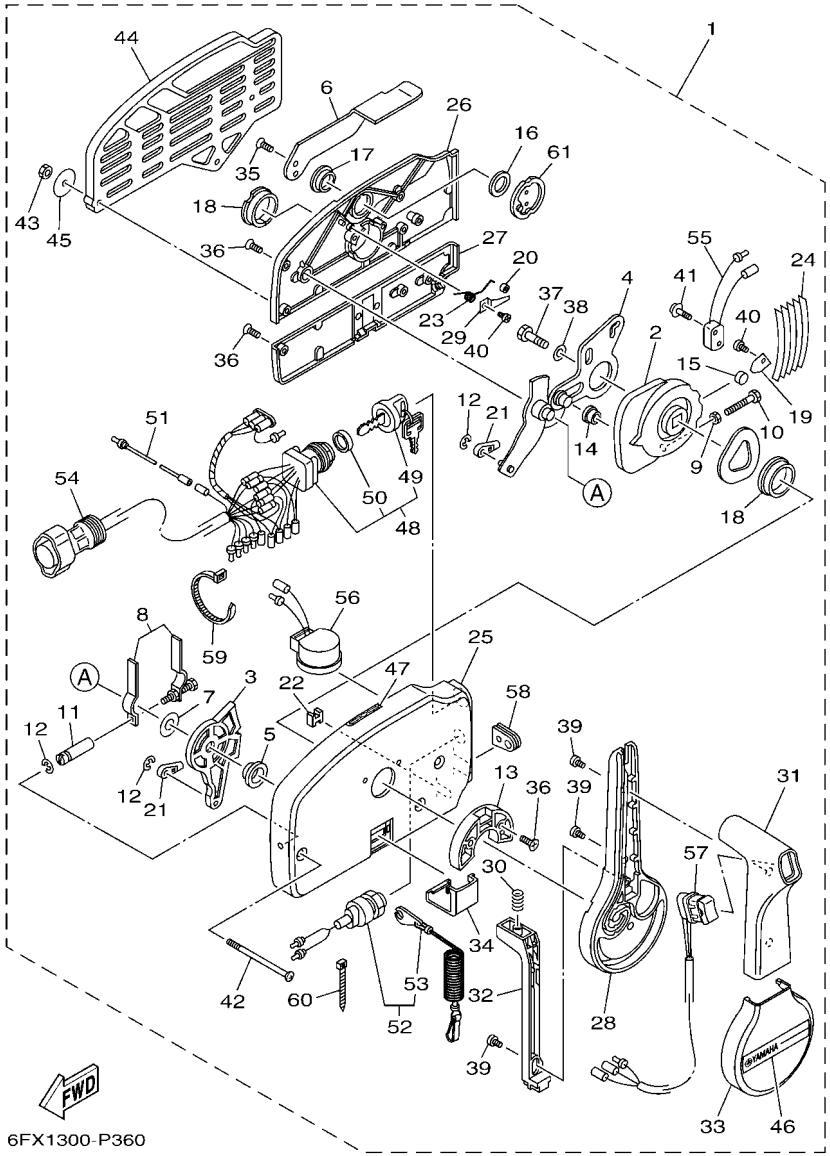

FIG. 40 REMOTE CONTROL ASSY 1 — CONTROL REMOTO COMPL 1

REF. NO.	PART NO. CODIGO Nº	DESCRIPTION DESCRIPCION	ET	EHT	6EL4			REMARKS OBSERVACIONES
1	703–48205–22	REMOTE CONTROL ASSY (10P, PTT) REMOTO CONTROL COMPL. (10P)	1					AP CHN,OTH WITH PT/T SW. AP CHN,OTH WITH PT/T SW.
2	703–48232–00	.GEAR .ENGRANAJE 1	1					
3	703–48271–00	.ARM, SHIFT .BRAZO CAMBIADOR	1					
4	703–48261–01	.ARM, THROTTLE .BRAZO ACELERADOR	1					
5	703–48235–00	.BUSHING .BUJE	1					
6	703–48152–10	.KNOB, FREE ACCEL. .PERILLA	1					
7	703–48268–00	.SPACER .ESPACIADOR 3	1					
8	703–48264–00	.FRICTION, THROTTLE .FRICCION DE ACELERADOR	1					
9	95380–05600	.NUT .TUERCA	1					
10	97380–05025	.BOLT .TORNILLO HEXAGONAL	1					
11	703–48265–10	.SHAFT, FRICTION .EJE FRICCION	1					
12	93430–06024	.CIRCLIP .SEGURO	3					
13	703–48245–00	.PLATE, LOCK .PLACA CERRADURA	1					
14	703–48252–00	.ROLLER, CAM .RODILLO LEVA	1					
15	701–48248–00	.ROLLER, FREE ACCEL. .RODILLO ACELERADOR LIBRE	1					
16	703–48198–00	.WASHER, WAVE .RONDANA ONDULADA 3	1					
17	703–48243–00	.BUSHING .BUJE 3	1					
18	703–48236–00	.BUSHING 1 .BUJE	2					
19	703–48189–00	.RETAINER .RETENEDOR	1					
20	703–48234–00	.ROLLER, DETENT .RODILLO	1					
21	703–48345–01	.CABLE END, REMOTE CONTROL 2 .TERMINAL CABLE DE CONTROL REMO	2					
22	703–48358–00	.ANCHOR, CABLE .ABRAZADERA CABLE	1					
23	703–48244–00	.SPRING, FREE ACCEL. .RESORTE ACELERADOR LIBRE	1					
24	703–48238–00	.SPRING, DETENT .RESORTE	5					
25	703–48211–10	.HOUSING,1 .CAJA	1					
26	703–48212–10	.BACK PLATE 1 .PLACA TRASERA 1	1					
27	703–48213–10	.BACK PLATE 2 .PLACA TRASERA 2	1					

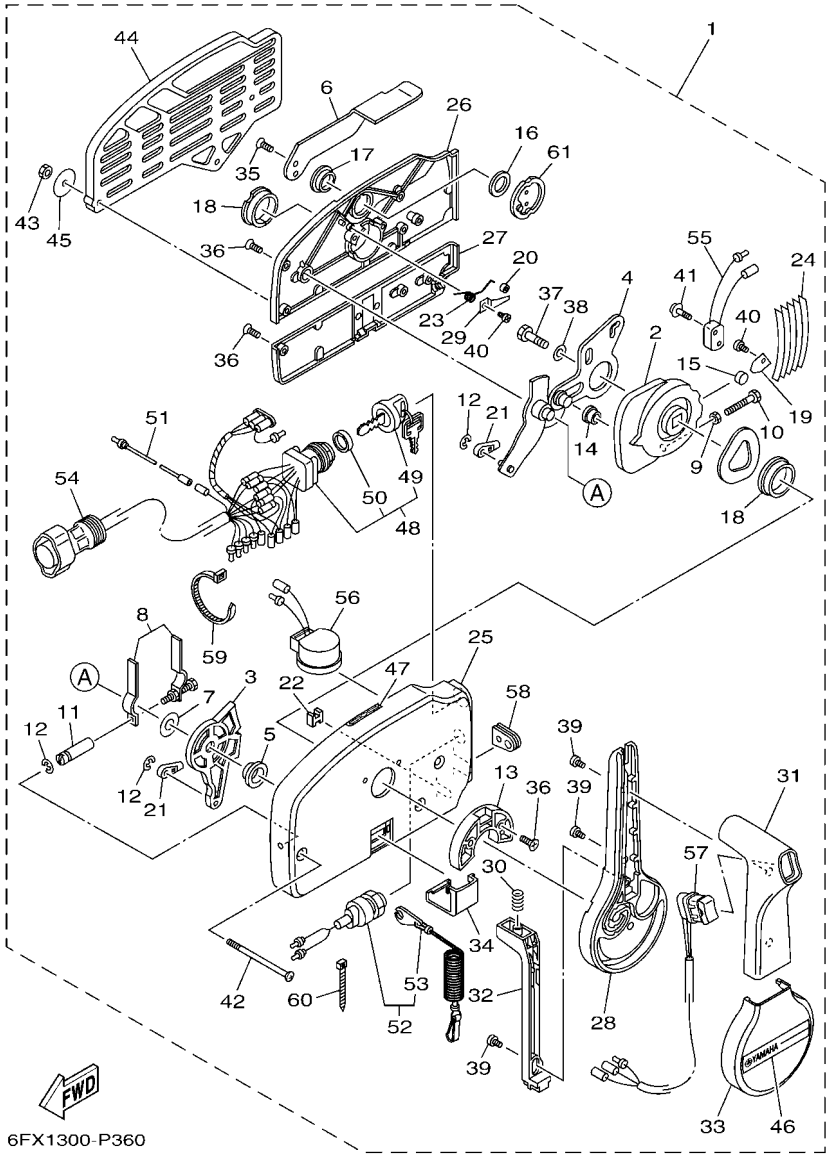

FIG. 40 REMOTE CONTROL ASSY 1 — CONTROL REMOTO COMPL 1

REF. NO.	PART NO. CODIGO Nº	DESCRIPTION DESCRIPCION	ET	EHT	6EL4			REMARKS OBSERVACIONES
28	703–48221–10	.LEVER, CONTROL .PALANCA CONTROL	1					
29	703–48246–00	.SPACER .ESPACIADOR	1					
30	703–48227–00	.SPRING, NEUTRAL LOCK .RESORTE DE SEGURO	1					
31	703–48222–20	.GRIP, CONTROL LEVER .MANGO DE PALANCA CONTROL	1					SINGLE SINGLE
32	703–48223–10	.LOCK, NEUTRAL .CERRADURA NEUTRO	1					
33	703–48225–10	.COVER .CUBIERTA	1					
34	703–48219–10	.COVER, LEAD .CUBIERTA	1					
35	703–48281–00	.SCREW .TORNILLO 1	2					
36	703–44189–20	.SCREW .TORNILLO	7					
37	97380–08030	.BOLT .TORNILLO HEXAGONAL	1					
38	92990–08600	.WASHER, PLATE .ARANDELA PLANA	1					
39	703–48128–10	.SCREW 2 .TORNILLO 2	3					
40	98580–04006	.SCREW, PAN HEAD .TORNILLO DE CABEZA CRUZADA	2					
41	703–48129–00	.SCREW 3 .TORNILLO 3	2					
42	703–44189–30	.SCREW .TORNILLO	3					
43	95380–06600	.NUT, HEXAGON .TUERCA	3					
44	703–48293–10	.SPACER, REMOTE CONTROL .ESPACIADOR	1					SINGLE SINGLE
45	701–48287–00	.WASHER .ARANDELA	3					
46	703–48215–10	.GRAPHIC .CALCOMANIA 1	1					
47	6X3–44191–00	.INDICATOR, SHIFT .INDICADOR DE CAMBIOS	1					
48	703–82510–44	.MAIN SWITCH ASSY .CONJUNTO DE LLAVE IGNICION	1					
49	703–82577–00	..CAP, KEY ..TAPA	1					
50	6K1–82532–00	..CAP ..TAPA	1					
51	703–82531–00	.WIRE, LEAD (L70) .CABLE CONDUCTOR (L70)	1					
52	688–82575–02	.ENGINE STOP SWITCH ASSY .INTERRUPTOR DE PARADA COMPL	1					
53	682–82556–00	..LANYARD, STOP SWITCH ..CORDON DE INTERRUPTOR PARADA	1					
54	688–8258A–20	.EXTENSION, WIRE HARNESS (4.9M) .EXTENSION, ARNES DE CABLES (4.	1					(10P) (10P)

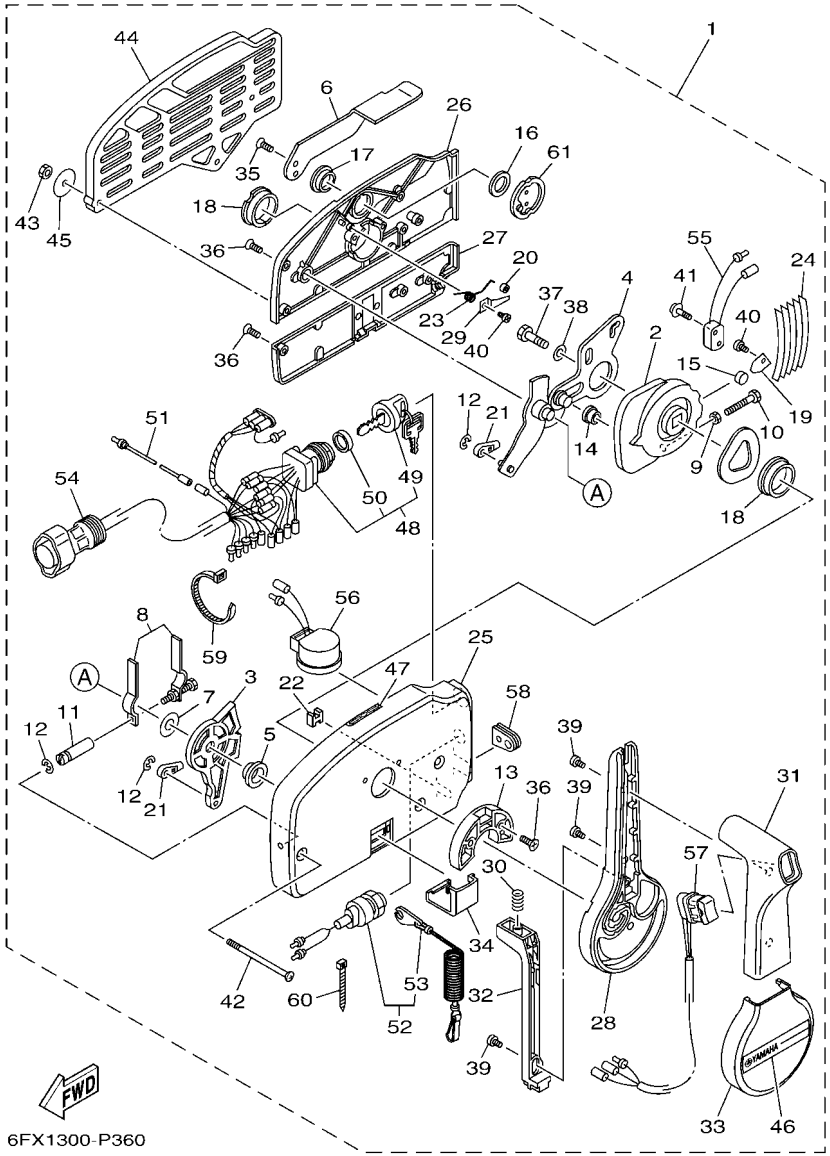

FIG. 40 REMOTE CONTROL ASSY 1 — CONTROL REMOTO COMPL 1

REF. NO.	PART NO. CODIGO Nº	DESCRIPTION DESCRIPCION	ET	EHT	6EL4			REMARKS OBSERVACIONES
55	703–82540–00	.NEUTRAL SWITCH ASSY .INTERRUPTOR NEUTRAL COMPL	1					
56	703–83383–11	.BUZZER .ZUMBADOR	1					
57	703–82563–31	.TRIM & TILT SWITCH ASSY .INTERRUPTOR DE INCLINACION	1					
58	703–48284–00	.GROMMET .TAPON	1					
59	703–82591–00	.BAND .BANDA	1					
60	703–82592–00	.BAND .BANDA	1					
61	703–48153–00	.SHAFT, FREE ACCEL. .EJE	1					

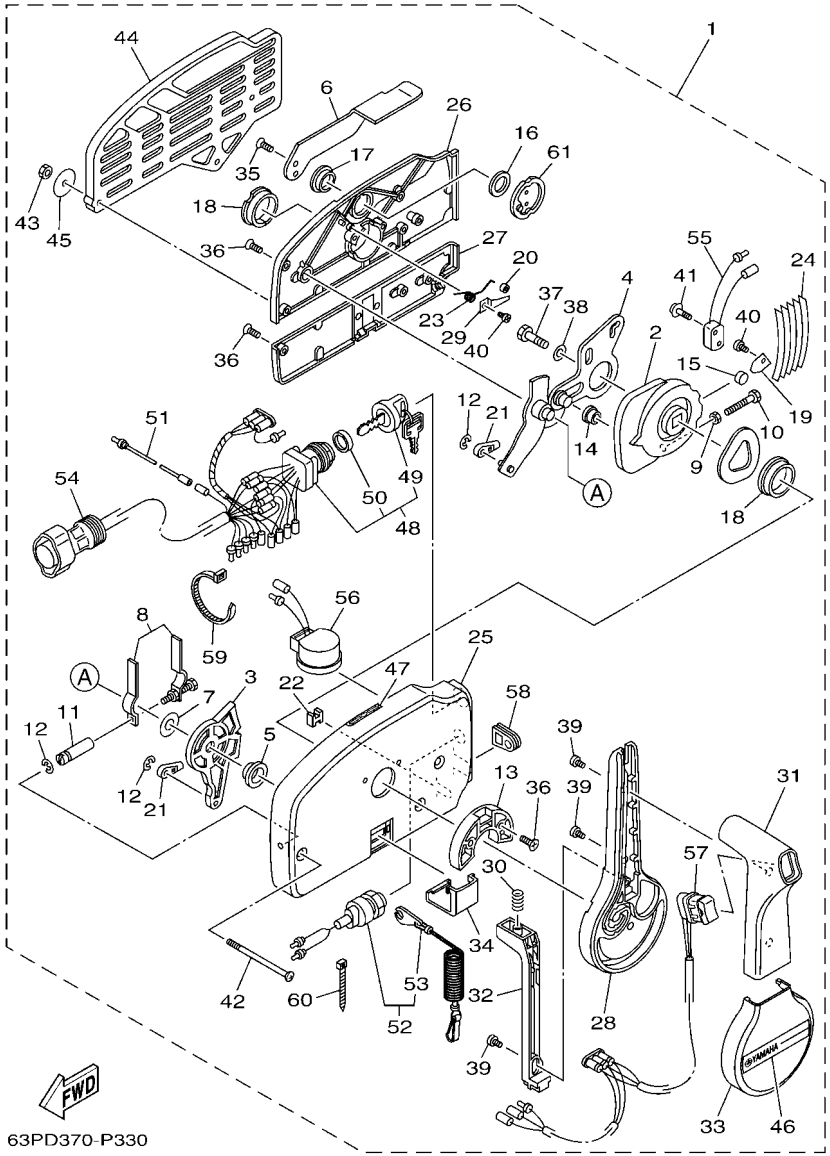

FIG. 41 REMOTE CONTROL ASSY 2 — CONTROL REMOTO COMPL 2

REF. NO.	PART NO. CODIGO Nº	DESCRIPTION DESCRIPCION	ET	EHT	6EL4			REMARKS OBSERVACIONES
1	703–48207–22	REMOTE CONTROL ASSY (10P, PTT) REMOTO CONTROL COMPL. (10P)	1					AP BRA WITH PT/T SW. AP BRA WITH PT/T SW.
2	703–48232–00	.GEAR .ENGRANAJE 1	1					
3	703–48271–00	.ARM, SHIFT .BRAZO CAMBIADOR	1					
4	703–48261–01	.ARM, THROTTLE .BRAZO ACELERADOR	1					
5	703–48235–00	.BUSHING .BUJE	1					
6	703–48152–10	.KNOB, FREE ACCEL. .PERILLA	1					
7	703–48268–00	.SPACER .ESPACIADOR 3	1					
8	703–48264–00	.FRICTION, THROTTLE .FRICCION DE ACELERADOR	1					
9	95380–05600	.NUT .TUERCA	1					
10	97380–05025	.BOLT .TORNILLO HEXAGONAL	1					
11	703–48265–10	.SHAFT, FRICTION .EJE FRICCION	1					
12	93430–06024	.CIRCLIP .SEGURO	3					
13	703–48245–00	.PLATE, LOCK .PLACA CERRADURA	1					
14	703–48252–00	.ROLLER, CAM .RODILLO LEVA	1					
15	701–48248–00	.ROLLER, FREE ACCEL. .RODILLO ACELERADOR LIBRE	1					
16	703–48198–00	.WASHER, WAVE .RONDANA ONDULADA 3	1					
17	703–48243–00	.BUSHING .BUJE 3	1					
18	703–48236–00	.BUSHING 1 .BUJE	2					
19	703–48189–00	.RETAINER .RETENEDOR	1					
20	703–48234–00	.ROLLER, DETENT .RODILLO	1					
21	703–48345–01	.CABLE END, REMOTE CONTROL 2 .TERMINAL CABLE DE CONTROL REMO	2					
22	703–48358–00	.ANCHOR, CABLE .ABRAZADERA CABLE	1					
23	703–48244–00	.SPRING, FREE ACCEL. .RESORTE ACELERADOR LIBRE	1					
24	703–48238–00	.SPRING, DETENT .RESORTE	5					
25	703–48211–10	.HOUSING,1 .CAJA	1					
26	703–48212–10	.BACK PLATE 1 .PLACA TRASERA 1	1					
27	703–48213–10	.BACK PLATE 2 .PLACA TRASERA 2	1					

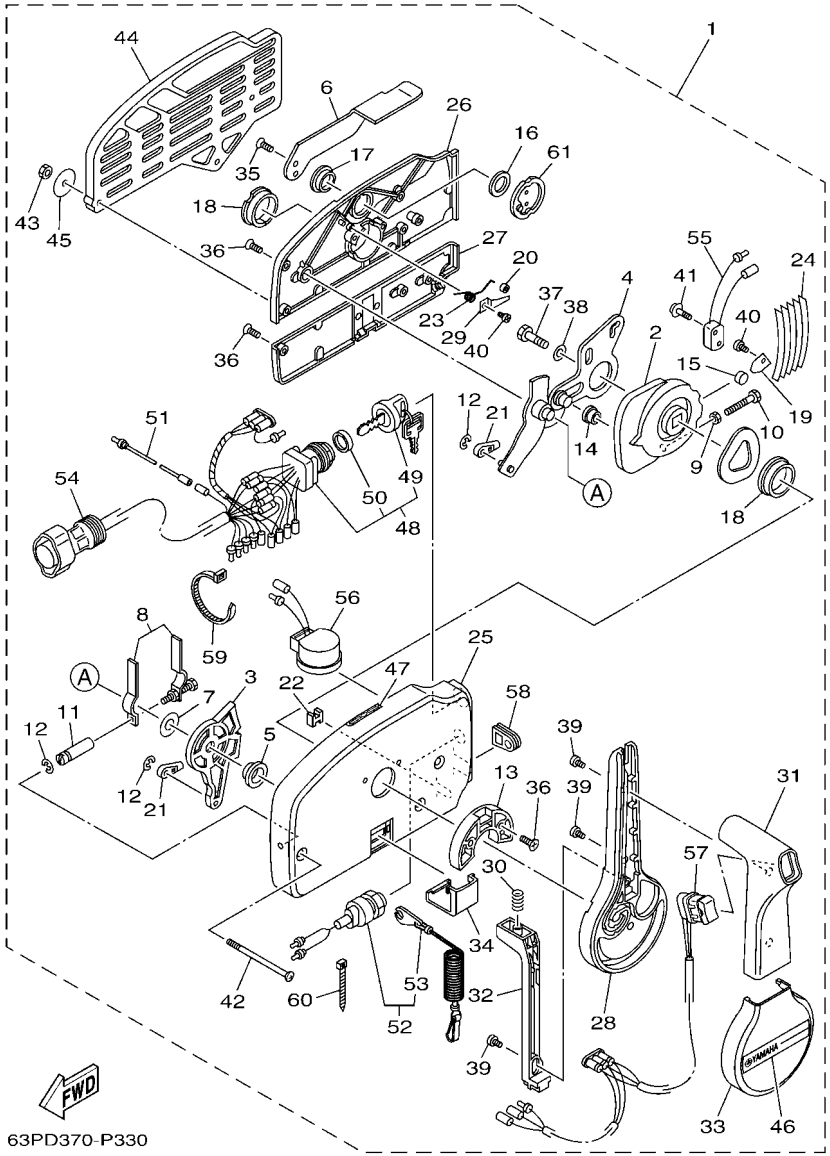

FIG. 41 REMOTE CONTROL ASSY 2 — CONTROL REMOTO COMPL 2

REF. NO.	PART NO. CODIGO Nº	DESCRIPTION DESCRIPCION	ET	EHT	6EL4			REMARKS OBSERVACIONES
28	703–48221–10	.LEVER, CONTROL .PALANCA CONTROL	1					
29	703–48246–00	.SPACER .ESPACIADOR	1					
30	703–48227–00	.SPRING, NEUTRAL LOCK .RESORTE DE SEGURO	1					
31	703–48222–20	.GRIP, CONTROL LEVER .MANGO DE PALANCA CONTROL	1					SINGLE SINGLE
32	703–48223–10	.LOCK, NEUTRAL .CERRADURA NEUTRO	1					
33	703–48225–10	.COVER .CUBIERTA	1					
34	703–48219–10	.COVER, LEAD .CUBIERTA	1					
35	703–48281–00	.SCREW .TORNILLO 1	2					
36	703–44189–20	.SCREW .TORNILLO	7					
37	97380–08030	.BOLT .TORNILLO HEXAGONAL	1					
38	92990–08600	.WASHER, PLATE .ARANDELA PLANA	1					
39	703–48128–10	.SCREW 2 .TORNILLO 2	3					
40	98580–04006	.SCREW, PAN HEAD .TORNILLO DE CABEZA CRUZADA	2					
41	703–48129–00	.SCREW 3 .TORNILLO 3	2					
42	703–44189–30	.SCREW .TORNILLO	3					
43	95380–06600	.NUT, HEXAGON .TUERCA	3					
44	703–48293–10	.SPACER, REMOTE CONTROL .ESPACIADOR	1					SINGLE SINGLE
45	701–48287–00	.WASHER .ARANDELA	3					
46	703–48215–10	.GRAPHIC .CALCOMANIA 1	1					
47	6X3–44191–00	.INDICATOR, SHIFT .INDICADOR DE CAMBIOS	1					
48	703–82510–44	.MAIN SWITCH ASSY .CONJUNTO DE LLAVE IGNICION	1					
49	703–82577–00	..CAP, KEY ..TAPA	1					
50	6K1–82532–00	..CAP ..TAPA	1					
51	703–82531–00	.WIRE, LEAD (L70) .CABLE CONDUCTOR (L70)	1					
52	688–82575–02	.ENGINE STOP SWITCH ASSY .INTERRUPTOR DE PARADA COMPL	1					
53	682–82556–00	..LANYARD, STOP SWITCH ..CORDON DE INTERRUPTOR PARADA	1					
54	688–8258A–20	.EXTENSION, WIRE HARNESS (4.9M) .EXTENSION, ARNES DE CABLES (4.	1					(10P) (10P)

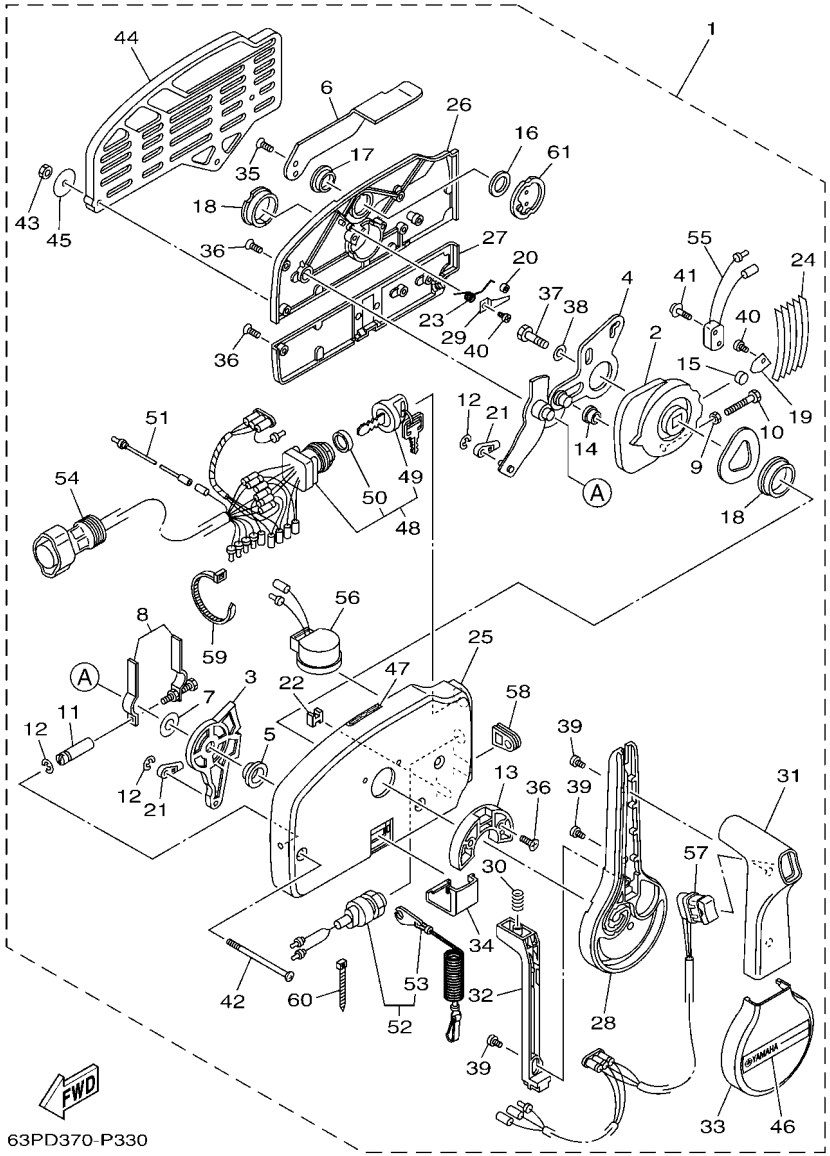

FIG. 41 REMOTE CONTROL ASSY 2 — CONTROL REMOTO COMPL 2

REF. NO.	PART NO. CODIGO Nº	DESCRIPTION DESCRIPCION	ET	EHT	6EL4			REMARKS OBSERVACIONES
55	703–82540–00	.NEUTRAL SWITCH ASSY .INTERRUPTOR NEUTRAL COMPL	1					
56	703–83383–11	.BUZZER .ZUMBADOR	1					
57	703–82563–21	.TRIM & TILT SWITCH ASSY .INTERRUPTOR DE INCLINACION	1					
58	703–48284–10	.GROMMET .TAPON	1					
59	703–82591–00	.BAND .BANDA	1					
60	703–82592–00	.BAND .BANDA	1					
61	703–48153–00	.SHAFT, FREE ACCEL. .EJE	1					

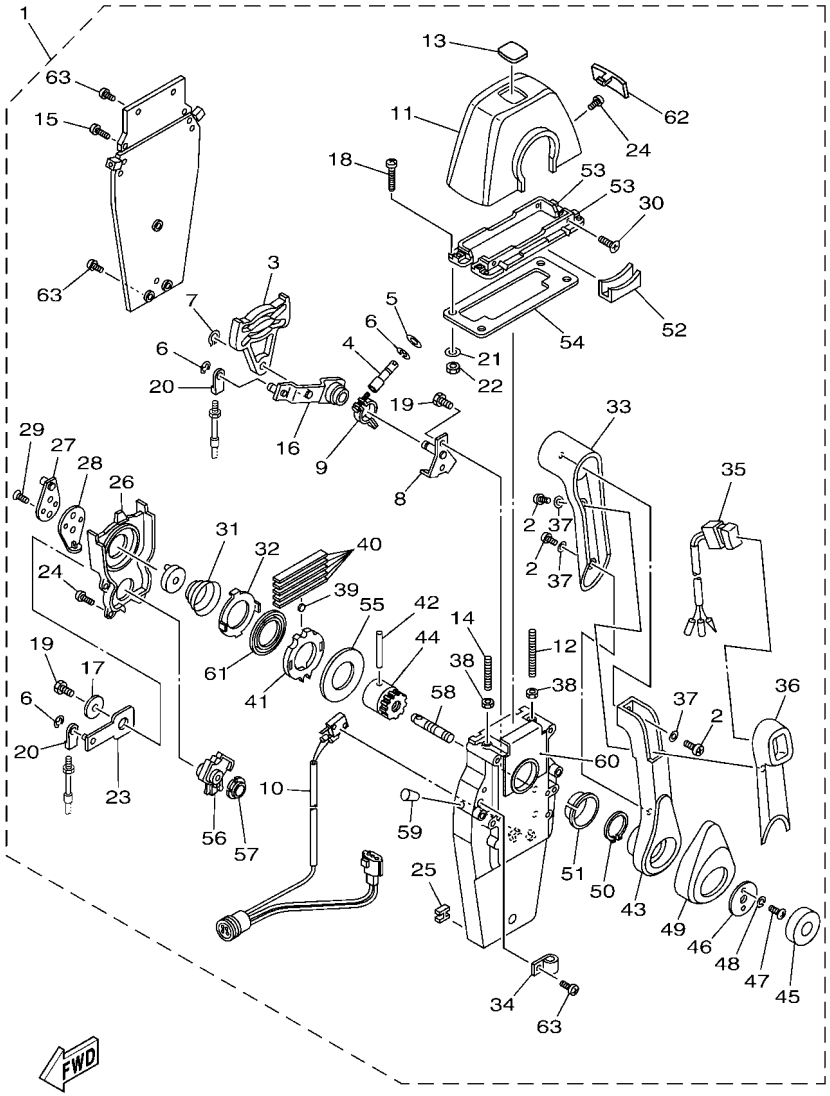

6DA5200-R430

FIG. 42 REMOTE CONTROL ASSY 3 — CONTROL REMOTO COMPL 3

REF. NO.	PART NO. CODIGO Nº	DESCRIPTION DESCRIPCION	ET	EHT	6EL4			REMARKS OBSERVACIONES
1	704–48205–R0	REMOTE CONTROL ASSY (R/H) REMOTO CONTROL COMPL. (R/H)	1					AP CAR WITH PT/T SW. AP CAR WITH PT/T SW.
2	704–48129–10	.SCREW 3 .TORNILLO 3	3					
3	EL8–48251–00	.PLATE, CAM .PLACA,LEVA	1					
4	704–48265–00	.SHAFT, FRICTION .EJE FRICCION	1					
5	701–48246–00	.SPACER .ESPACIADOR	1					
6	93430–06024	.CIRCLIP .SEGURO	4					
7	EL8–48259–00	.CIRCLIP 1 .SEGURO	1					
8	704–48262–00	.SHAFT, THROTTLE .EJE DE ACELERADOR	1					
9	704–48264–00	.THROTTLE, FRICTION .FRICCION DE ACELERADOR	1					
10	704–82540–40	.NEUTRAL SWITCH ASSY .INTERRUPTOR NEUTRAL COMPL	1					
11	704–48119–50	.COVER .CUBIERTA	1					
12	EL8–48281–00	.SCREW .TORNILLO 1	1					
13	704–48215–60	.GRAPHIC .CALCOMANIA 1	1					
14	704–48281–00	.SCREW .TORNILLO 1	1					
15	97890–05025	.SCREW, PAN HEAD .TORNILLO	2					
16	704–48261–00	.ARM, THROTTLE .BRAZO ACELERADOR	1					
17	EL8–48191–00	.WASHER 1 .ARANDELA	1					
18	704–48283–00	.SCREW .TORNILLO 3	4					
19	97380–06018	.BOLT .TORNILLO HEXAGONAL	3					
20	703–48345–01	.CABLE END, REMOTE CONTROL 2 .TERMINAL CABLE DE CONTROL REMO	2					
21	704–48287–00	.WASHER .ARANDELA	4					
22	95380–05600	.NUT .TUERCA	4					
23	704–48271–00	.ARM, SHIFT .BRAZO CAMBIADOR	1					
24	EL8–48127–00	.SCREW 1 .TORNILLO 1	10					
25	703–48358–00	.ANCHOR, CABLE .ABRAZADERA CABLE	1					
26	704–48231–00	.HOUSING, GEAR .CAJA,ENGRANAJE	1					
27	EL8–48241–00	.ARM, DRIVE .BRAZO,MANDO	1					

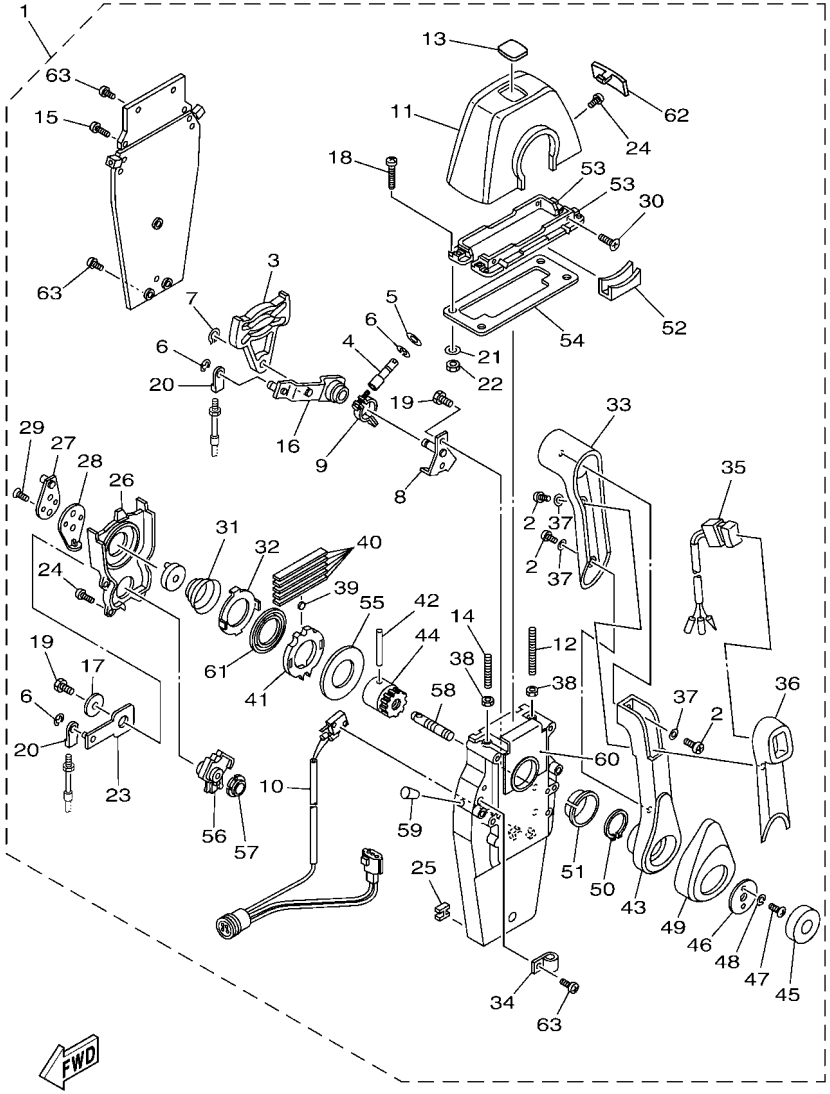

6DA5200-R430

FIG. 42 REMOTE CONTROL ASSY 3 — CONTROL REMOTO COMPL 3

REF. NO.	PART NO. CODIGO Nº	DESCRIPTION DESCRIPCION	ET	EHT	6EL4			REMARKS OBSERVACIONES
28	EL8–48254–00	.STOPPER, THROTTLE ADJUSTING .TAPON	1					
29	92780–06020	.SCREW, FLAT HEAD .TORNILLO CABEZA PLANA	2					
30	98780–05018	.SCREW, FLAT HEAD .TORNILLO CABEZA PLANA	4					
31	EL8–48244–00	.SPRING, FREE ACCEL. .RESORTE ACELERADOR LIBRE	1					
32	EL8–48245–00	.PLATE, LOCK .PLACA CERRADURA	1					
33	704–48222–10	.GRIP, CONTROL LEVER .MANGO DE PALANCA CONTROL	1					
34	704–82594–00	.CLAMP .GRAMPA	1					
35	704–82563–60	.TRIM & TILT SWITCH ASSY .INTERRUPTOR DE INCLINACION	1					
36	704–48229–10	.GRIP, CONTROL LEVER .MANGO DE PALANCA CONTROL 2	1					
37	92990–05300	.WASHER, INTERNAL TOOTH .ARANDELA PLANA	3					
38	95380–06600	.NUT, HEXAGON .TUERCA	2					
39	701–48248–00	.ROLLER, FREE ACCEL. .RODILLO ACELERADOR LIBRE	1					
40	704–48238–00	.SPRING, DETENT .RESORTE	5					
41	704–48232–P1	.GEAR .ENGRANAJE 1	1					
42	EL8–48164–00	.PIN 2 .PASADOR 2	1					
43	704–48221–R0	.LEVER, CONTROL .PALANCA CONTROL	1					
44	704–48242–10	.SHAFT, DRIVE .EJE, PROPULSION	1					
45	704–48225–R0	.COVER .CUBIERTA	1					
46	704–48192–00	.WASHER 2 .RONDANA 2	1					
47	97890–06018	.SCREW, PAN HEAD .TORNILLO	2					
48	92990–06300	.WASHER, INTERNAL TOOTH .ARANDELA PLANA	2					
49	704–48224–R0	.COVER, CONTROL LEVER .CUBIERTA DE PALANCA CONTROL	1					
50	EL8–48279–00	.CIRCLIP 2 .SEGURO2	1					
51	704–48234–00	.BUSHING 1 .BUJE	1					
52	704–48219–R0	.COVER, LEAD .CUBIERTA	1					
53	704–48144–10	.PLATE, STOPPER 2 .PLACA, RETEN 2	2					
54	704–48176–00	.GROMMET .TOPON	1					

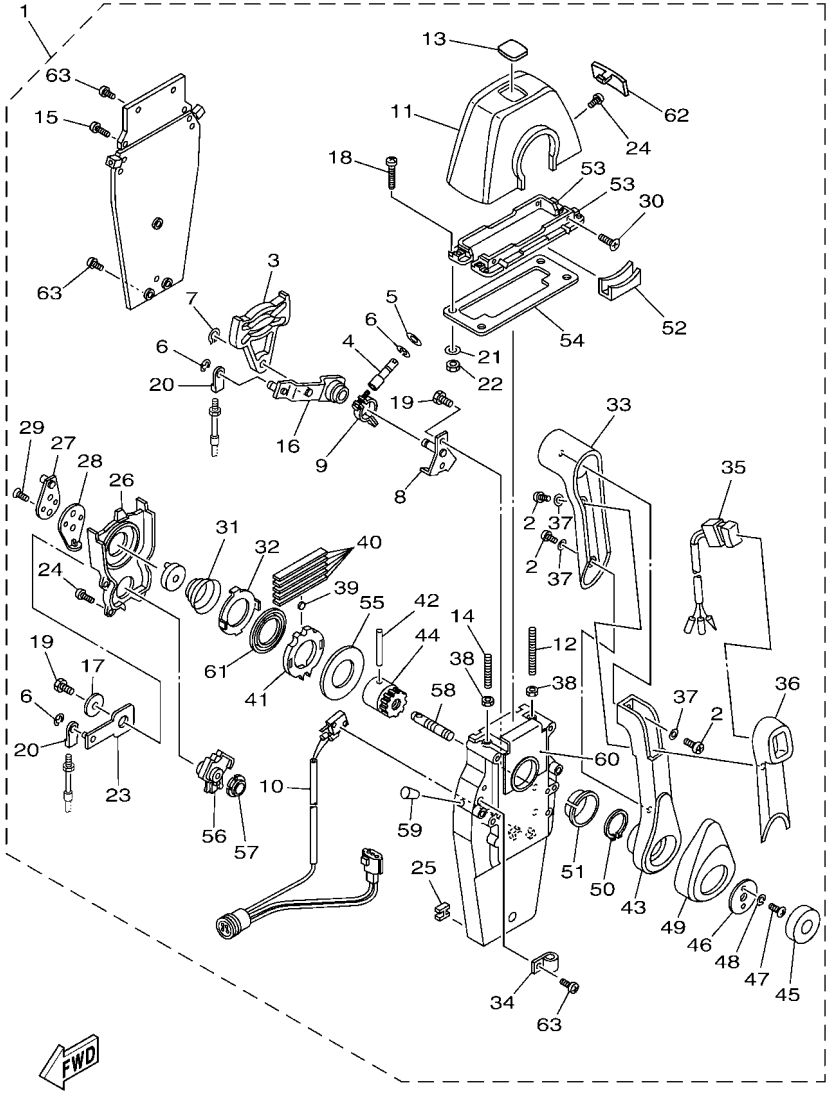

6DA5200-R430

FIG. 42 REMOTE CONTROL ASSY 3 — CONTROL REMOTO COMPL 3

REF. NO.	PART NO. CODIGO Nº	DESCRIPTION DESCRIPCION	ET	EHT	6EL4			REMARKS OBSERVACIONES
55	704–48192–P0	.WASHER 2 .RONDANA 2	1					
56	704–48233–00	.GEAR 2 .ENGRANAJE 2	1					
57	704–48235–00	.BUSHING .BUJE	1					
58	704–48153–00	.SHAFT, FREE ACCEL. .EJE	1					
59	704–48166–00	.PLUG .TAPON	1					
60	704–48284–P0	.GROMMET .TAPON	1					
61	704–48178–10	.PLATE, SHIFT .PLACA	1					
62	704–48167–20	.PLUG .TAPON AGUJERO	1					
63	97890–05016	.SCREW, PAN HEAD .TORNILLO	3					

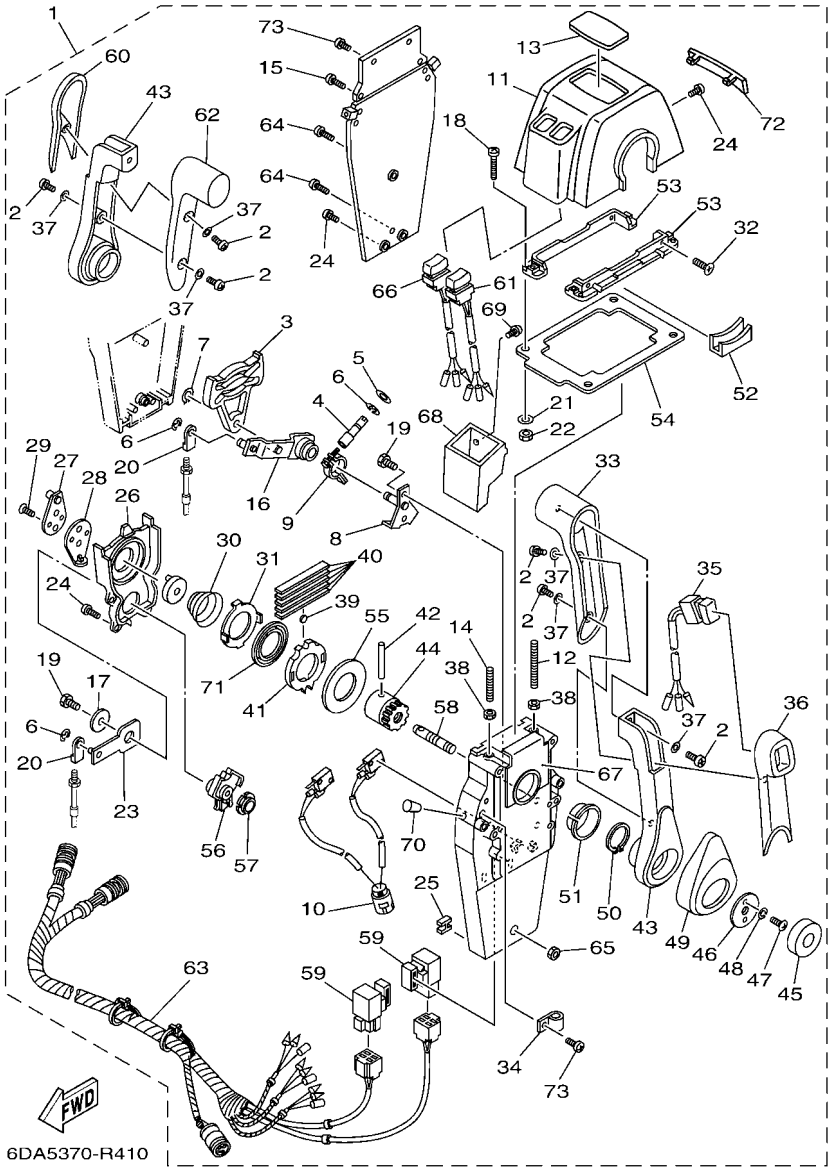

FIG. 43 REMOTE CONTROL ASSY 4 — CONTROL REMOTO COMPL 4

REF. NO.	PART NO. CODIGO Nº	DESCRIPTION DESCRIPCION	ET	EHT	6EL4			REMARKS OBSERVACIONES
1	704–48207–R0	REMOTE CONTROL ASSY REMOTO CONTROL COMPL.			1			AP CAR,OTH,BRA WITH PT/T SW. AP CAR,OTH,BRA WITH PT/T SW.
2	704–48129–10	.SCREW 3 .TORNILLO 3			6			
3	EL8–48251–00	.PLATE, CAM .PLACA,LEVA			2			
4	704–48265–00	.SHAFT, FRICTION .EJE FRICCION			2			
5	701–48246–00	.SPACER .ESPACIADOR			2			
6	93430–06024	.CIRCLIP .SEGURO			8			
7	EL8–48259–00	.CIRCLIP 1 .SEGURO			2			
8	704–48262–00	.SHAFT, THROTTLE .EJE DE ACELERADOR			2			
9	704–48264–00	.THROTTLE, FRICTION .FRICCION DE ACELERADOR			2			
10	704–82540–30	.NEUTRAL SWITCH ASSY .INTERRUPTOR NEUTRAL COMPL			1			
11	704–48119–60	.COVER .CUBIERTA			1			
12	EL8–48281–00	.SCREW .TORNILLO 1			2			
13	704–48215–70	.GRAPHIC .CALCOMANIA 1			1			
14	704–48281–00	.SCREW .TORNILLO 1			2			
15	97890–05025	.SCREW, PAN HEAD .TORNILLO			4			
16	704–48261–00	.ARM, THROTTLE .BRAZO ACELERADOR			2			
17	EL8–48191–00	.WASHER 1 .ARANDELA			2			
18	704–48283–00	.SCREW .TORNILLO 3			4			
19	97380–06018	.BOLT .TORNILLO HEXAGONAL			6			
20	703–48345–01	.CABLE END, REMOTE CONTROL 2 .TERMINAL CABLE DE CONTROL REMO			4			
21	704–48287–00	.WASHER .ARANDELA			4			
22	95380–05600	.NUT .TUERCA			4			
23	704–48271–00	.ARM, SHIFT .BRAZO CAMBIADOR			2			
24	EL8–48127–00	.SCREW 1 .TORNILLO 1			18			
25	703–48358–00	.ANCHOR, CABLE .ABRAZADERA CABLE			2			
26	704–48231–00	.HOUSING, GEAR .CAJA,ENGRANAJE			2			
27	EL8–48241–00	.ARM, DRIVE .BRAZO,MANDO			2			

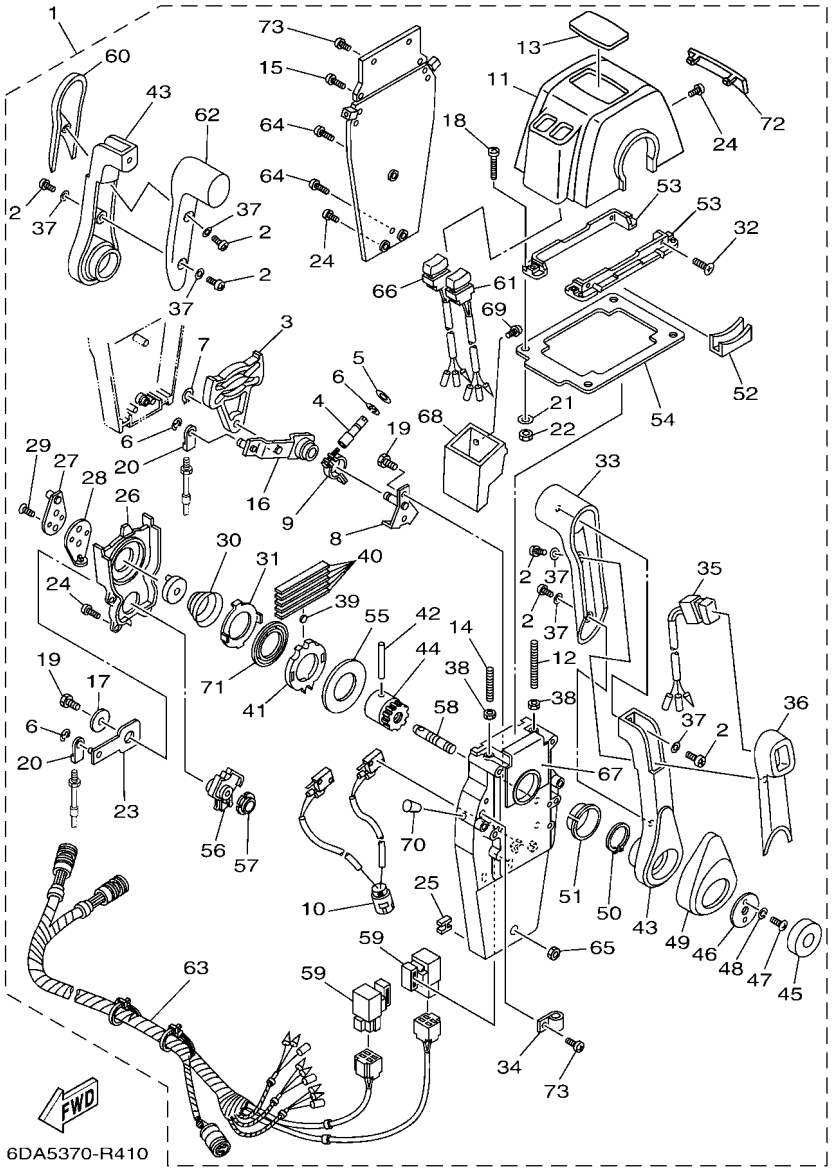

FIG. 43 REMOTE CONTROL ASSY 4 — CONTROL REMOTO COMPL 4

REF. NO.	PART NO. CODIGO Nº	DESCRIPTION DESCRIPCION	ET	EHT	6EL4			REMARKS OBSERVACIONES
28	EL8–48254–00	.STOPPER, THROTTLE ADJUSTING .TAPON			2			
29	92780–06020	.SCREW, FLAT HEAD .TORNILLO CABEZA PLANA			4			
30	EL8–48244–00	.SPRING, FREE ACCEL. .RESORTE ACELERADOR LIBRE			2			
31	EL8–48245–00	.PLATE, LOCK .PLACA CERRADURA			2			
32	98780–05018	.SCREW, FLAT HEAD .TORNILLO CABEZA PLANA			4			
33	704–48222–30	.GRIP, CONTROL LEVER .MANGO DE PALANCA CONTROL			2			
34	704–82594–00	.CLAMP .GRAMPA			1			
35	704–82563–70	.TRIM & TILT SWITCH ASSY .INTERRUPTOR DE INCLINACION			1			
36	704–48229–10	.GRIP, CONTROL LEVER .MANGO DE PALANCA CONTROL 2			1			
37	92990–05300	.WASHER, INTERNAL TOOTH .ARANDELA PLANA			6			
38	95380–06600	.NUT, HEXAGON .TUERCA			4			
39	701–48248–00	.ROLLER, FREE ACCEL. .RODILLO ACELERADOR LIBRE			2			
40	704–48238–00	.SPRING, DETENT .RESORTE			10			
41	704–48232–P1	.GEAR .ENGRANAJE 1			2			
42	EL8–48164–00	.PIN 2 .PASADOR 2			2			
43	704–48221–R0	.LEVER, CONTROL .PALANCA CONTROL			2			
44	704–48242–10	.SHAFT, DRIVE .EJE, PROPULSION			2			
45	704–48225–R0	.COVER .CUBIERTA			2			
46	704–48192–00	.WASHER 2 .RONDANA 2			2			
47	97890–06018	.SCREW, PAN HEAD .TORNILLO			4			
48	92990–06300	.WASHER, INTERNAL TOOTH .ARANDELA PLANA			4			
49	704–48224–R0	.COVER, CONTROL LEVER .CUBIERTA DE PALANCA CONTROL			2			
50	EL8–48279–00	.CIRCLIP 2 .SEGURO2			2			
51	704–48234–00	.BUSHING 1 .BUJE			2			
52	704–48219–R0	.COVER, LEAD .CUBIERTA			2			
53	704–48144–20	.PLATE, STOPPER 2 .PLACA, RETEN 2			2			
54	704–48176–10	.GROMMET .TOPON			1			

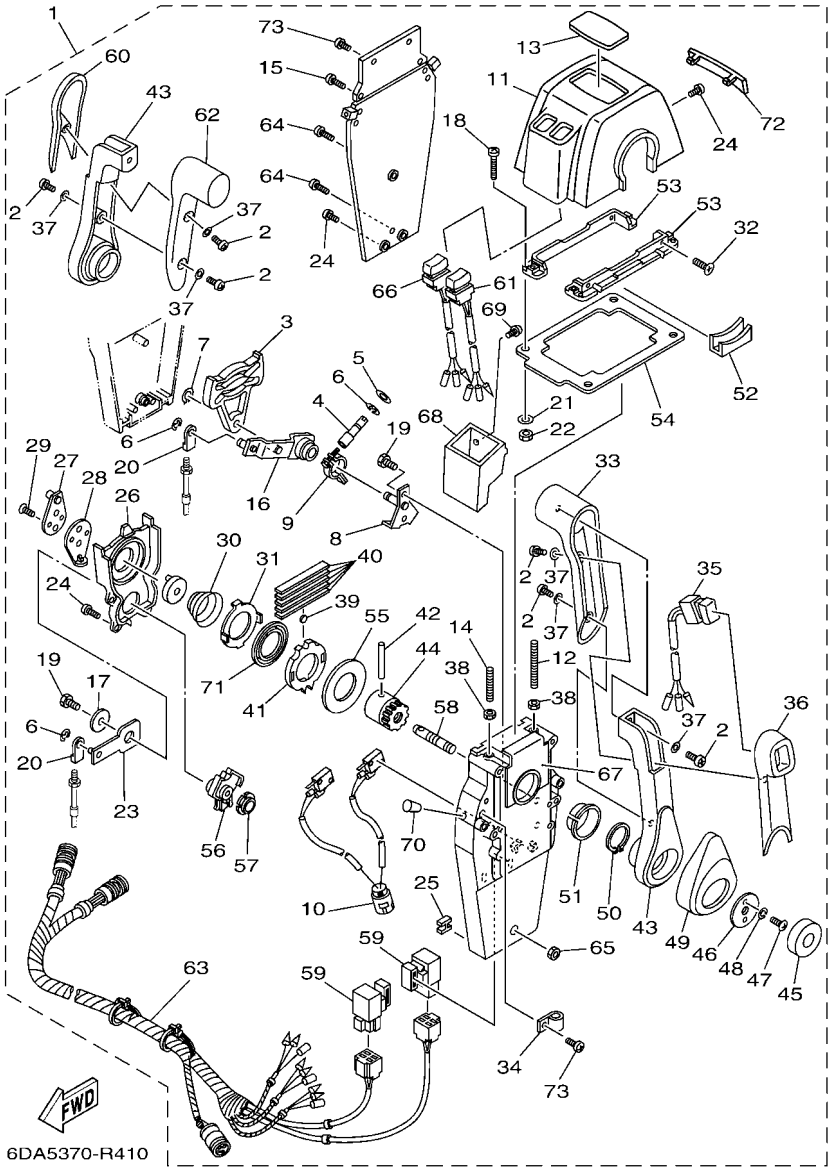

FIG. 43 REMOTE CONTROL ASSY 4 — CONTROL REMOTO COMPL 4

REF. NO.	PART NO. CODIGO Nº	DESCRIPTION DESCRIPCION	ET	EHT	6EL4			REMARKS OBSERVACIONES
55	704–48192–P0	.WASHER 2 .RONDANA 2			2			
56	704–48233–00	.GEAR 2 .ENGRANAJE 2			2			
57	704–48235–00	.BUSHING .BUJE			2			
58	704–48153–00	.SHAFT, FREE ACCEL. .EJE			2			
59	704–81950–10	.RELAY ASSY .RELE COMPLETO			2			
60	704–48229–20	.GRIP, CONTROL LEVER .MANGO DE PALANCA CONTROL 2			1			
61	704–82563–80	.TRIM & TILT SWITCH ASSY .INTERRUPTOR DE INCLINACION			1			
62	704–48222–20	.GRIP, CONTROL LEVER .MANGO DE PALANCA CONTROL			1			
63	704–82590–10	.WIRE HARNESS ASSY .CONJUNTO DE CABLES			1			
64	704–48128–00	.SCREW 2 .TORNILLO 2			3			
65	704–48156–00	.NUT 1 .TUERCA 1			1			
66	704–82563–90	.TRIM & TILT SWITCH ASSY .INTERRUPTOR DE INCLINACION			1			
67	704–48284–P0	.GROMMET .TAPON			2			
68	704–48285–20	.GROMMET 2 .TAPON 2			1			
69	704–48129–60	.SCREW 3 .TORNILLO 3			2			
70	704–48166–00	.PLUG .TAPON			2			
71	704–48178–00	.PLATE, SHIFT .PLACA			2			
72	704–48167–30	.PLUG .TAPON AGUJERO			1			
73	97890–05016	.SCREW, PAN HEAD .TORNILLO			5			

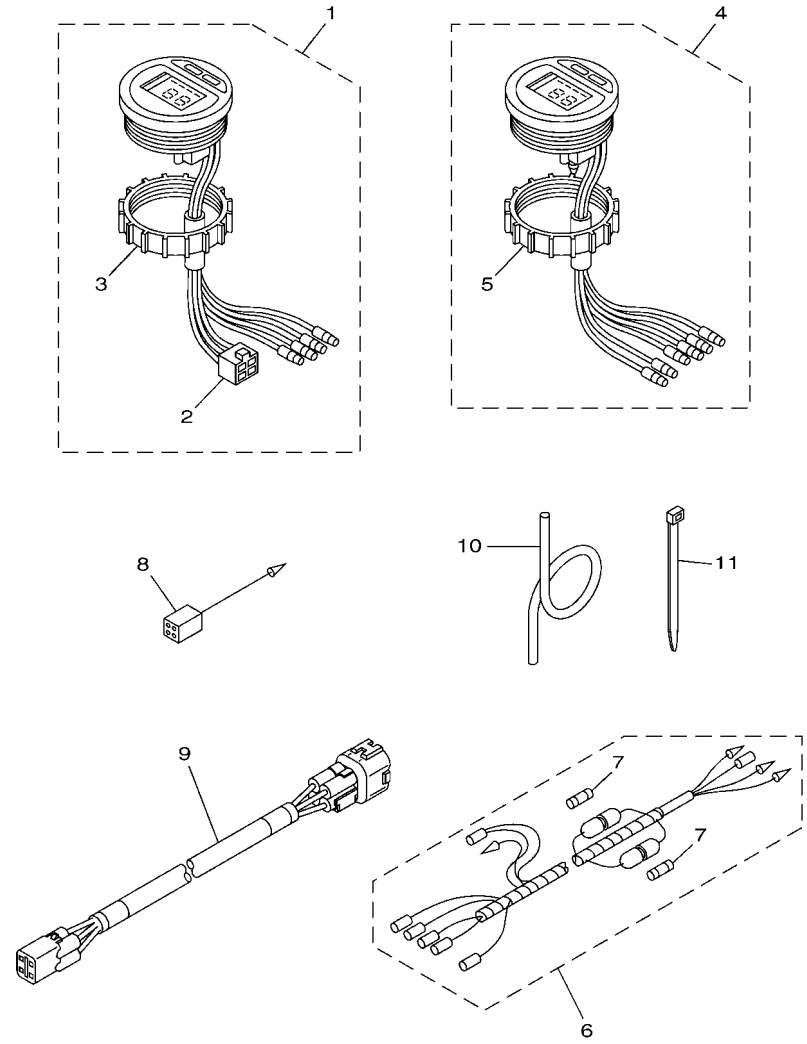

6DA5200-R450

FIG. 44 METER 1 — MEDIDOR 1

REF. NO.	PART NO. CODIGO Nº	DESCRIPTION DESCRIPCION	ET	EHT	6EL4			REMARKS OBSERVACIONES
1	6Y5–8350T–E0	TACHOMETER ASSY TACOMETRO COMPLETO	1					AP FOR BRA,CHN AP FOR BRA,CHN
2	9E450–04533	.CONNECTOR .CONECTOR	1					F-4-W F-4-W
3	6Y8–84383–00	.NUT, RING .TUERCA ANILLO	1					
4	6Y5–83570–A0	SPEEDOMETER ASSY VELOCIMETRO COMPLETO	1					AP FOR BAR AP FOR BAR
5	6Y8–84383–00	.NUT, RING .TUERCA ANILLO	1					
6	6Y5–83553–M0	WIRE, LEAD (L=2.5M) CABLE CONDUCTOR (L=2.5M)	1					AP FOR BRA AP FOR BRA
	6Y5–83553–00	WIRE, LEAD (L=2.5M) CABLE CONDUCTOR (L=2.5M)	1					AP FOR CHN AP FOR CHN
7	1E6–82151–00	.FUSE (10A) .FUSIBLE (10A)	2					FOR 6Y5-83553-M0 FOR 6Y5-83553-M0
	1E6–82151–00	.FUSE (10A) .FUSIBLE (10A)	1					FOR 6Y5-83553-00 FOR 6Y5-83553-00
8	6Y5–82117–00	WIRE, LEAD (BLACK) (L300) CABLE, CONDUCTOR (NEGRO)	1					AP FOR BRA AP FOR BRA
9	6Y5–83653–30	WIRE, LEAD (L=8.0M) CABLE CONDUCTOR (L=8.0M)	1					AP FOR BRA,CHN 4P,8M AP FOR BRA,CHN 4P,8M
10	6Y5–83557–10	TUBE (8M) TUBO (8M)	1					AP FOR BRA AP FOR BRA
11	90465–11M10	CLAMP BRIDA	2					AP FOR BRA AP FOR BRA

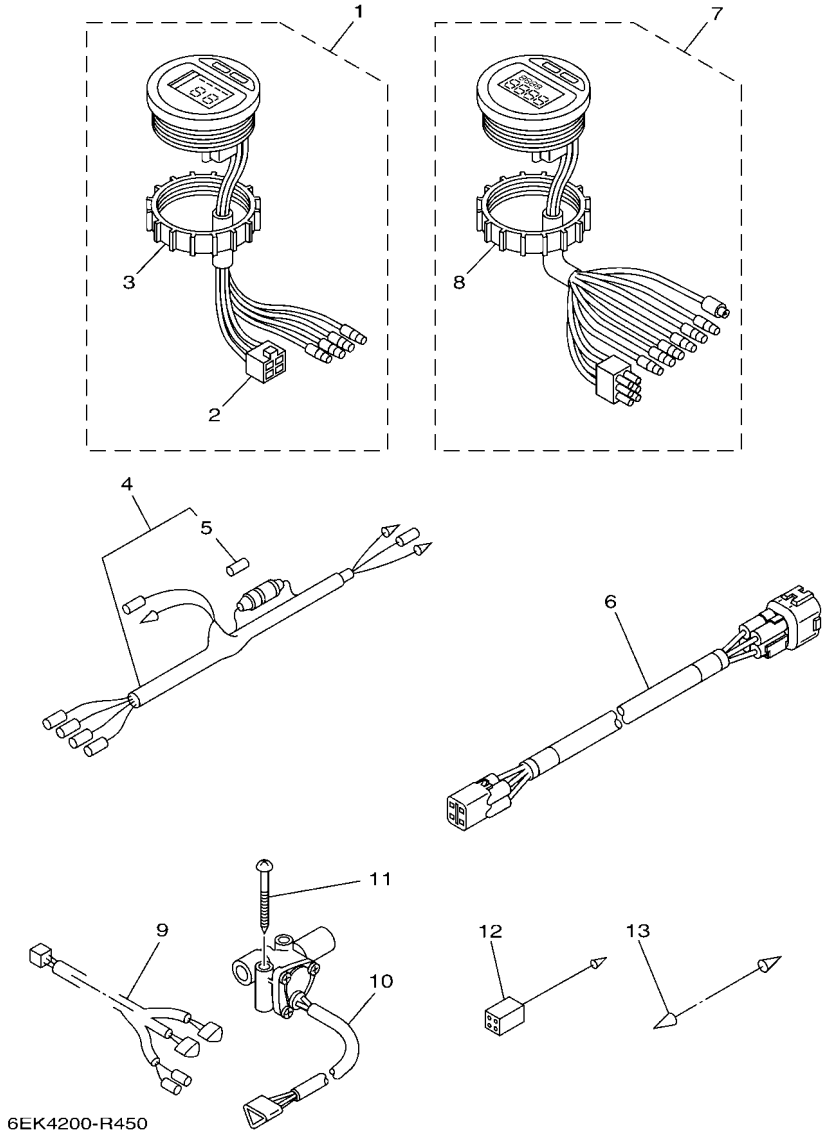

FIG. 45 METER 2 — MEDIDOR 2

REF. NO.	PART NO. CODIGO Nº	DESCRIPTION DESCRIPCION	ET	EHT	6EL4			REMARKS OBSERVACIONES
1	6Y5–8350T–E0	TACHOMETER ASSY TACOMETRO COMPLETO			1			AP FOR BRA AP FOR BRA
2	9E450–04533	.CONNECTOR .CONECTOR			1			F-4-W F-4-W
3	6Y8–84383–00	.NUT, RING .TUERCA ANILLO			1			
4	6Y5–83553–00	WIRE, LEAD (L=2.5M) CABLE CONDUCTOR (L=2.5M)			1			AP FOR BRA AP FOR BRA
5	1E6–82151–00	.FUSE (10A) .FUSIBLE (10A)			1			
6	6Y5–83653–40	WIRE, LEAD (L=9.0M) CABLE CONDUCTOR (L=9.0M)			1			AP FOR BRA 4P,9M AP FOR BRA 4P,9M
7	6Y5–8350F–B0	FUEL METER MOVEMENT ASSY MEDIDOR DE GESTION COMBUSTIBLE			1			AP FOR BRA AP FOR BRA
8	6Y8–84383–00	.NUT, RING .TUERCA ANILLO			1			
9	6Y5–83553–F1	WIRE, LEAD (L=8.0M) CABLE CONDUCTOR (L=8.0M)			1			AP FOR BRA AP FOR BRA
10	6Y5–85752–02	SENDER UNIT ASSY, FUEL METER UNIDAD TRANSM. MED. COMBUST.			2			AP FOR BRA AP FOR BRA
11	90158–06003	SCREW, WOOD TORNILLO DE MADERA			4			AP FOR BRA AP FOR BRA
12	6Y5–82117–00	WIRE, LEAD (BLACK) (L300) CABLE, CONDUCTOR (NEGRO)			1			AP FOR BRA AP FOR BRA
13	703–82531–00	WIRE, LEAD (L70) CABLE CONDUCTOR (L70)			1			AP FOR BRA AP FOR BRA

FIG. 46 SWITCH & PANEL 1 — PANEL DE INTERRUPTOR 1

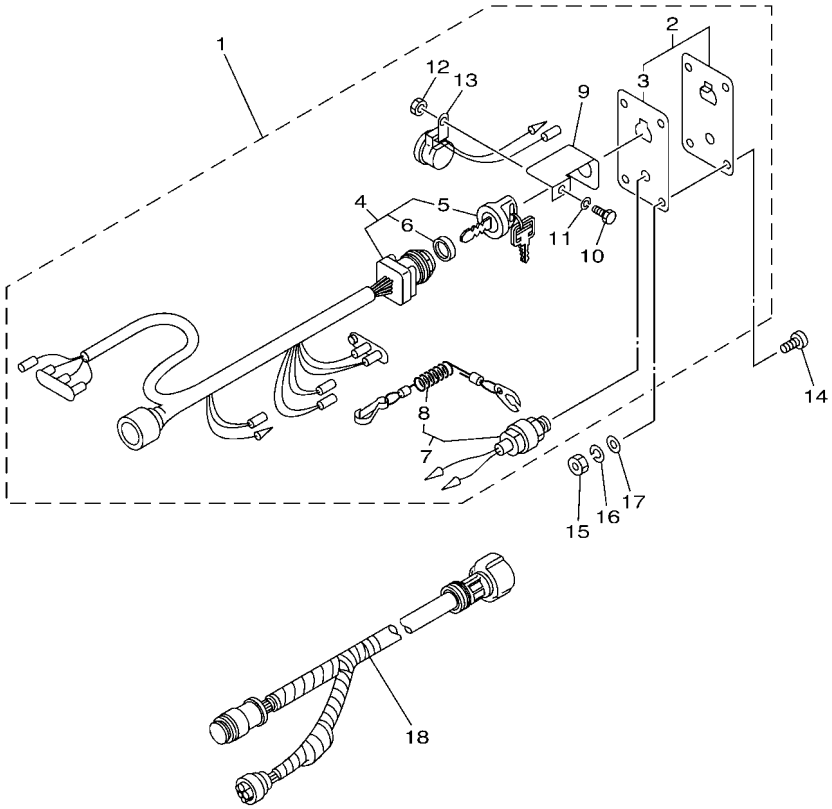

6EK3010-Q500

REF. NO.	PART NO. CODIGO Nº	DESCRIPTION DESCRIPCION	ET	EHT	6EL4			REMARKS OBSERVACIONES
1	6R5–82570–07	PANEL SWITCH ASSY INTERRUPTOR DE PANEL COMPL.	1					AP FOR CAR AP FOR CAR
2	704–82571–02	.PANEL, SWITCH .PANEL DE INTERRUPTOR	1					
3	6R5–82588–01	..PLATE ..PLACA	1					
4	6R5–82510–03	.MAIN SWITCH ASSY .CONJUNTO DE LLAVE IGNICION	1					
5	676–82577–01	..CAP, KEY ..TAPA	1					
6	703–82532–00	..CAP ..TAPA	1					
7	688–82575–02	.ENGINE STOP SWITCH ASSY .INTERRUPTOR DE PARADA COMPL	1					
8	682–82556–00	..LANYARD, STOP SWITCH ..CORDON DE INTERRUPTOR PARADA	1					
9	64D–82581–00	.STAY, CORD CLAMP .SOPORTE DE GRAMPA DE CABLE	1					
10	97303–05012	.BOLT .TORNILLO	1					
11	92903–05100	.WASHER, SPRING .RONDANA SENCILLA	1					
12	95303–05700	.NUT .TUERCA	1					
13	6R5–83383–00	.BUZZER .ZUMBADOR	1					
14	90149–05M05	SCREW TORNILLO DE REGLAJE	4					AP FOR CAR AP FOR CAR
15	95303–05600	NUT TUERCA	4					AP FOR CAR AP FOR CAR
16	92903–05100	WASHER, SPRING RONDANA SENCILLA	4					AP FOR CAR AP FOR CAR
17	92903–05600	WASHER, PLATE RONDANA SENCILLA	4					AP FOR CAR AP FOR CAR
18	6K1–8258A–40	EXTENSION, WIRE HARNESS (8M) EXTENSION, ARNES DE CABLES (8M	1					AP FOR CAR (10P) AP FOR CAR (10P)

FIG. 47 SWITCH & PANEL 2 — PANEL DE INTERRUPTOR 2

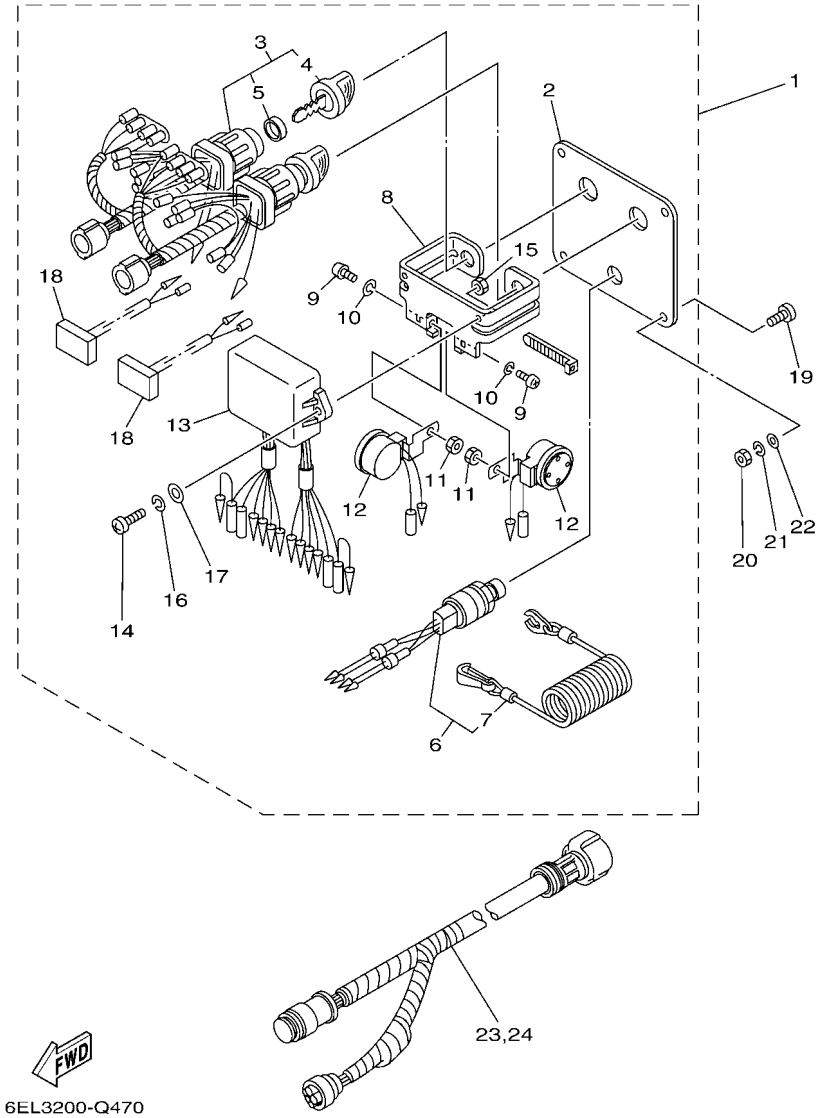

REF. NO.	PART NO. CODIGO Nº	DESCRIPTION DESCRIPCION	ET	EHT	6EL4			REMARKS OBSERVACIONES
1	6K1–82570–13	PANEL SWITCH ASSY INTERRUPTOR DE PANEL COMPL.			1			AP FOR BRA AP FOR BRA
2	6K1–82571–02	.PLATE, PANEL SWITCH .PANEL DE INTERRUPTOR			1			
3	6K1–82510–07	.MAIN SWITCH ASSY .CONJUNTO DE LLAVE IGNICION			2			
4	703–82577–00	..CAP, KEY ..TAPA			1			
5	6K1–82532–00	..CAP ..TAPA			1			
6	6K1–82575–01	.ENGINE STOP SWITCH ASSY .INTERRUPTOR DE PARADA COMPL			1			
7	682–82556–00	..LANYARD, STOP SWITCH ..CORDON DE INTERRUPTOR PARADA			1			
8	6K1–83614–01	.BRACKET .SOPORTE			1			
9	98980–05010	.SCREW, BIND .TORNILLO DE LIGAR			2			
10	92990–05100	.WASHER, SPRING .ARANDELA PLANA			2			
11	95380–05600	.NUT .TUERCA			2			
12	688–83383–12	.BUZZER .ZUMBADOR			2			
13	6K1–85830–02	.CONTROL UNIT ASSY .UNIDAD CONTROL			1			
14	98980–06020	.SCREW, BIND .TORNILLO DE LIGAR			2			
15	95380–06600	.NUT, HEXAGON .TUERCA			2			
16	92990–06100	.WASHER, SPRING .ARANDELA PLANA			2			
17	92990–06600	.WASHER, PLATE .ARANDELA PLANA			2			
18	6K1–81980–00	.DIODE ASSY .CONJUNTO DIODO			2			
19	90149–05M05	SCREW TORNILLO DE REGLAJE			4			AP FOR BRA AP FOR BRA
20	95380–05600	NUT TUERCA			4			AP FOR BRA AP FOR BRA
21	92990–05100	WASHER, SPRING ARANDELA PLANA			4			AP FOR BRA AP FOR BRA
22	92990–05600	WASHER, PLATE ARANDELA PLANA			4			AP FOR BRA AP FOR BRA
23	6K1–8258A–40	EXTENSION, WIRE HARNESS (8M) EXTENSION, ARNES DE CABLES (8M			1			AP FOR BRA (10P) AP FOR BRA (10P)
24	61B–8258A–01	EXTENSION, WIRE HARNESS (9.5M) EXTENSION, ARNES DE CABLES(9.5			1			AP FOR BRA (10P) AP FOR BRA (10P)

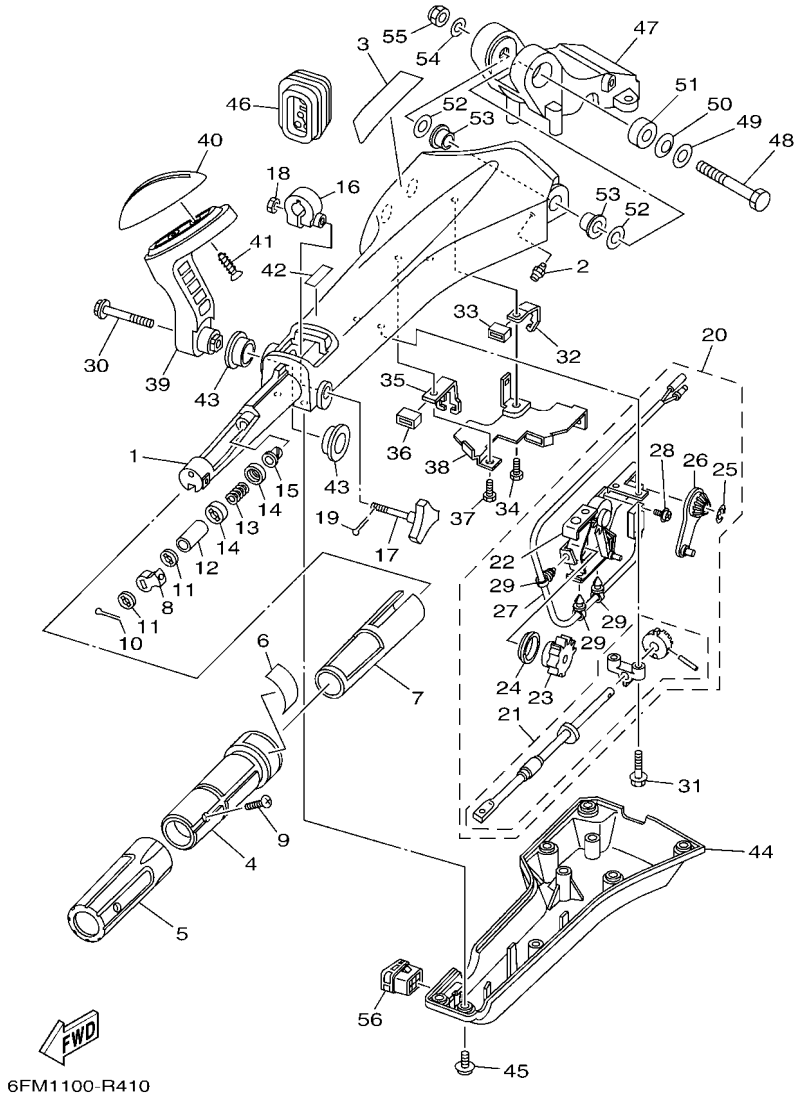

FIG. 48 OPTIONAL PARTS 1 — PARTES OPCIONALES 1

REF. NO.	PART NO. CODIGO Nº	DESCRIPTION DESCRIPCION	ET	EHT	6EL4			REMARKS OBSERVACIONES
1	6X4–42111–02–8D	HANDLE, STEERING MANIJA DE DIRECCION	1	1				
2	93700–06M03	NIPPLE, GREASE BOQUILLA DE ENGRASAR	1	1				
3	6X4–48215–00	GRAPHIC CALCOMANIA 1	1	1				
4	6X4–42119–01	GRIP, STEERING HANDLE MANGO, MANIJA DE DIRRECCION	1	1				
5	6X4–42177–00	RUBBER, HANDLE HULE DE MANIJA	1	1				
6	6X4–42137–00	INDICATOR, THROTTLE INDICADOR ACELERADOR	1	1				
7	6X4–41291–00	BUSHING BUJE	1	1				
8	6X4–44139–01	COLLAR COLLAR	1	1				
9	90152–05007	SCREW, COUNTERSUNK TORNILLO EMBUTIDO	1	1				
10	91490–20010	PIN. COTTER CHAVETA	1	1				
11	6X4–44177–00	WASHER RONDANA	2	2				
12	6X4–42128–00	COLLAR, DISTANCE 1 COLLAR DISTANCIADOR 1	1	1				
13	90501–23215	SPRING, COMPRESSION RESORTE DE COMPRESION	1	1				
14	6X4–44188–00	WASHER ARANDELLA	2	2				
15	90386–08032	BUSH BUJE	1	1				
16	63D–42126–00	FRICTION, STEERING HANDLE GRIP FRICCION DE MANGO DIRECCION	1	1				
17	6X4–48154–00	KNOB, THROTTLE PERILLA DE ACELERADOR	1	1				
18	95380–06600	NUT, HEXAGON TUERCA	1	1				
19	91490–20010	PIN. COTTER CHAVETA	1	1				
20	6X4–44100–01	SHIFT LINK ASSY ESLABON DE SLECTOR COMPLETO	1	1				
21	6X4–42115–00	.SHAFT, STEERING HANDLE .EJE MANIJA DE DIRECCION	1	1				
22	6X4–44102–00	.SHIFT ASSIST ASSY. .SELECTOR DE ASISTIR	1	1				
23	6X4–47731–01	.GEAR, DRIVE .ENGRANAJE DE TRACCION	1	1				
24	6X4–44132–00	.BUSHING .BUJE	1	1				
25	6X4–14137–00	.CLIP .PRESILLA	1	1				
26	6X4–48261–00	.ARM, THROTTLE .BRAZO ACELERADOR	1	1				
27	6X4–82540–00	.NEUTRAL SWITCH ASSY .INTERRUPTOR NEUTRAL COMPL	1	1				

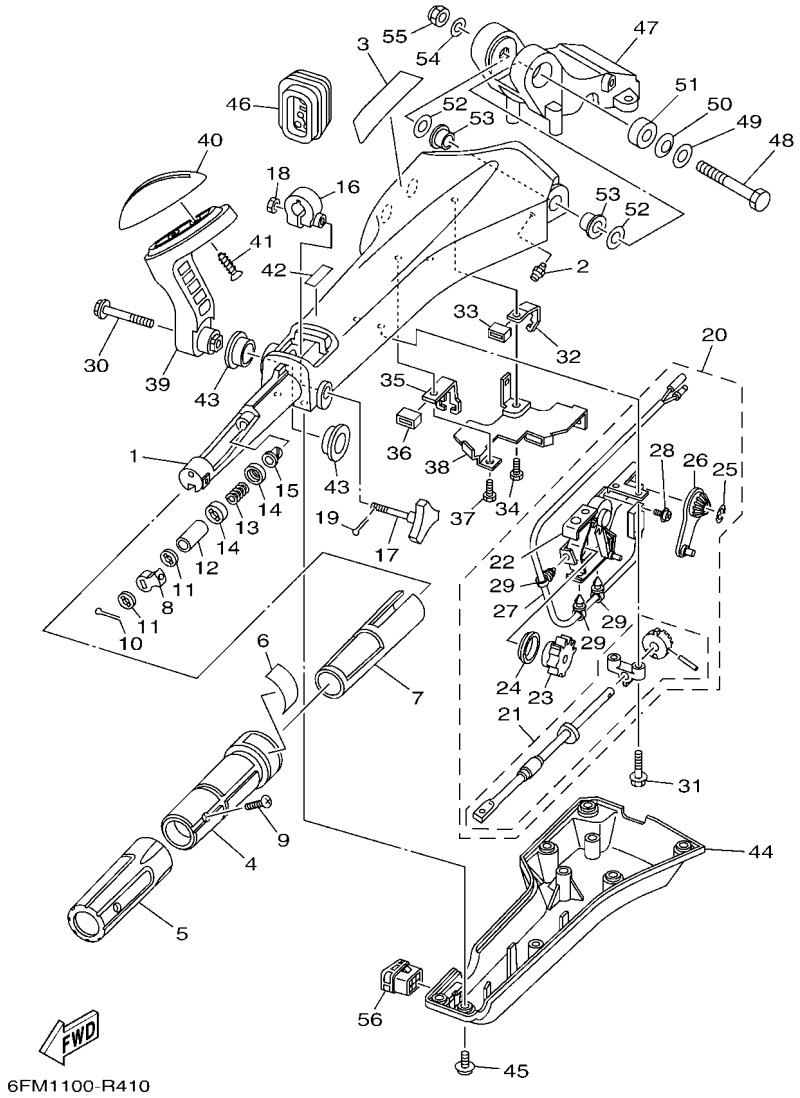

FIG. 48 OPTIONAL PARTS 1 — PARTES OPCIONALES 1

REF. NO.	PART NO. CODIGO Nº	DESCRIPTION DESCRIPCION	ET	EHT	6EL4			REMARKS OBSERVACIONES
28	703–48129–00	.SCREW 3 .TORNILLO 3	2	2				
29	6X4–42821–00	.BAND, CLAMP .BRIDA DE CINTA	3	3				
30	97595–08540	BOLT, WITH WASHER PERNO CON ARANDELA	1	1				
31	97595–06530	BOLT, WITH WASHER PERNO CON ARANDELA	2	2				
32	6X4–48538–00	CLAMP, CABLE 1 GRAMPA DE CABLE	1	1				
33	6X4–26367–00	PROTECTOR ACCESORIA	1	1				
34	97095–06014	BOLT PERNO	1	1				
35	6X4–48538–10	CLAMP, CABLE 1 GRAMPA DE CABLE	1	1				
36	6X4–26367–00	PROTECTOR ACCESORIA	1	1				
37	97095–06014	BOLT PERNO	1	1				
38	6X4–42159–00	STAY SOPORTE	1	1				
39	6X4–44159–00–8D	HANDLE, GEAR SHIFT MANIJA DE CAMBIO DE MARCHAS	1	1				
40	6X4–44173–00	LEVER, SHIFT CONTROL PALANCA CONTROL CAMBIOS	1	1				
41	97780–60920	SCREW, TAPPING TORNILLO DE CABEZA DE CONO ACH	2	2				
42	6X3–44191–00	INDICATOR, SHIFT INDICADOR DE CAMBIOS	1	1				
43	90386–26MA3	BUSH BUJE	2	2				
44	6X4–42131–11	COVER, HANDLE STEERING CUBIERTA MANIJA DIRRECCION	1	1				
45	97985–06216	SCREW, WITH WASHER TORNILLO, CON ARANDELA	6	6				
46	6X4–42725–01	GROMMET TAPON	1	1				
47	63D–42121–22–8D	BRACKET SOPORTE	1	1				
48	90101–12014	BOLT TORNILLO	1	1				
49	92990–12200	WASHER, PLAIN ARANDELA PLANA	1	1				
50	90206–12M22	WASHER, WAVE ARANDELA ONDULADA	1	1				
51	90387–12M02	COLLAR ESPACIADOR	1	1				
52	90201–12035	WASHER, PLATE ARANDELA PLANA	2	2				
53	90386–12003	BUSH BUJE	2	2				
54	92990–12600	WASHER, PLATE ARANDELA PLANA	1	1				

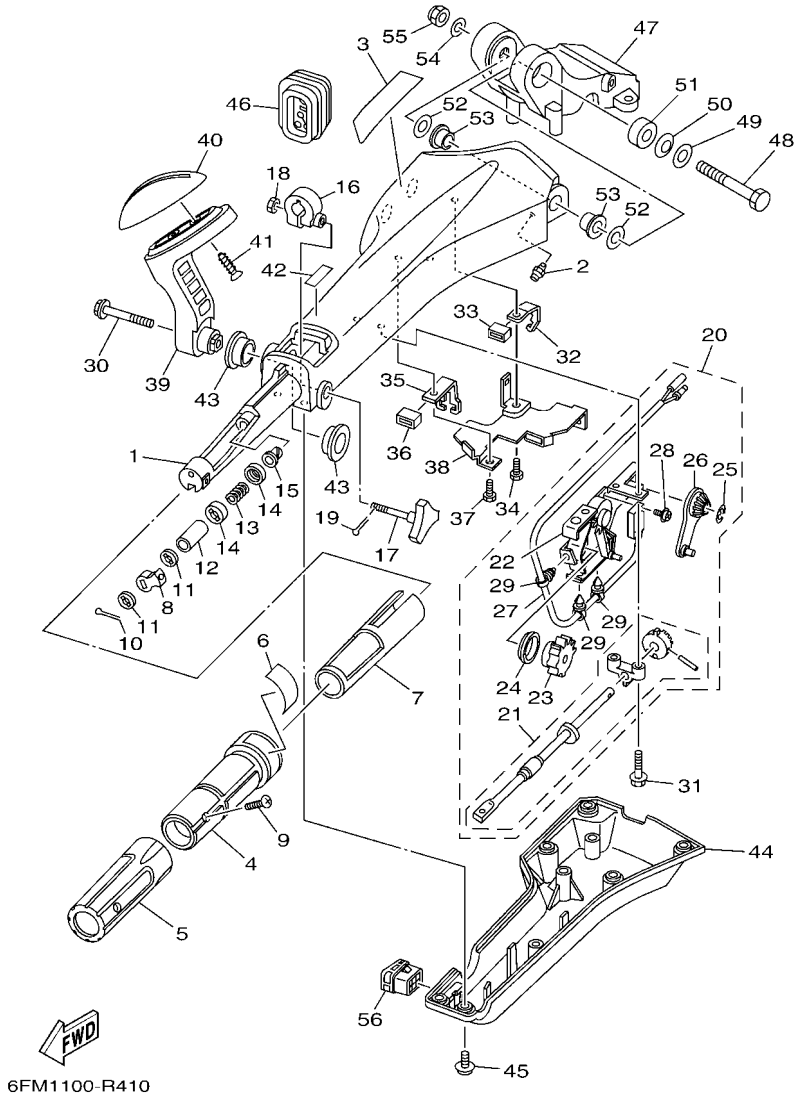

FIG. 48 OPTIONAL PARTS 1 — PARTES OPCIONALES 1

REF. NO.	PART NO. CODIGO Nº	DESCRIPTION DESCRIPCION	ET	EHT	6EL4			REMARKS OBSERVACIONES
55	90185–12M12	NUT, SELF-LOCKING TUERCA AUTOBLOCANTE	1	1				
56	6X4–42728–10	CAP TAPA	1	1				

FIG. 49 OPTIONAL PARTS 2 — PARTES OPCIONALES 2

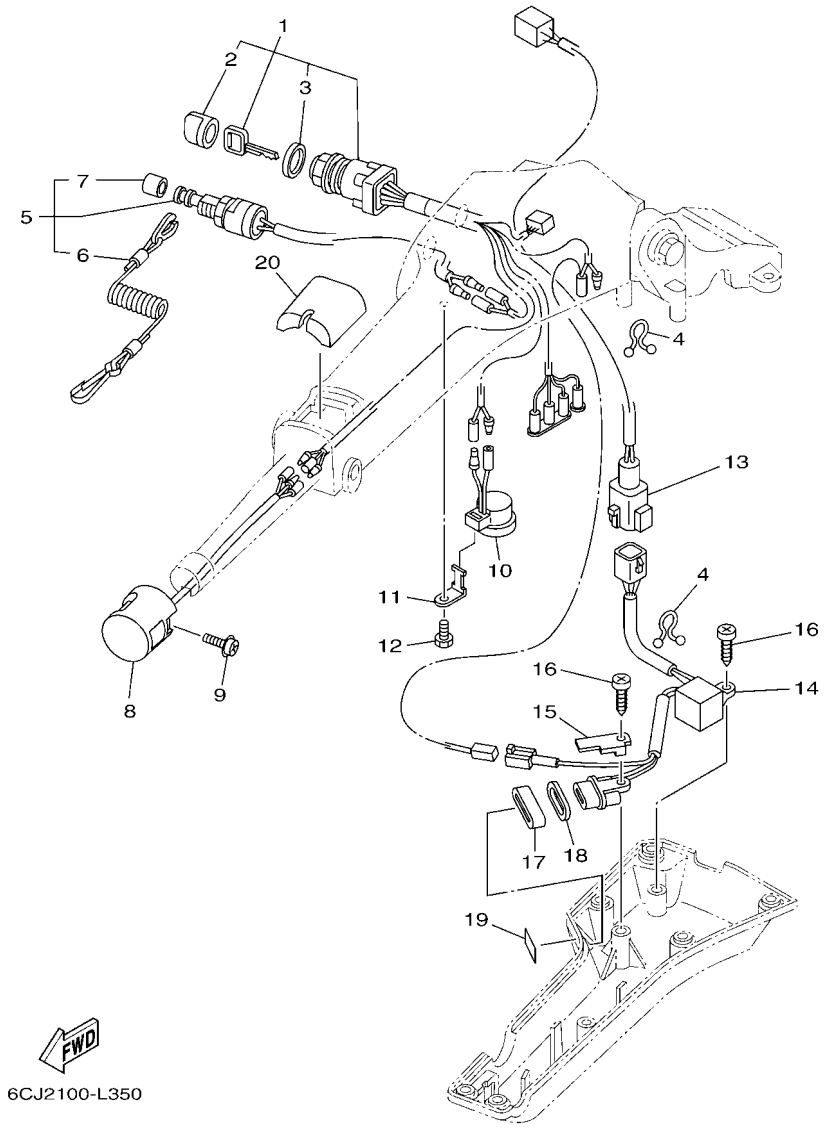

REF. NO.	PART NO. CODIGO Nº	DESCRIPTION DESCRIPCION	ET	EHT	6EL4			REMARKS OBSERVACIONES
1	6X4–82510–41	MAIN SWITCH ASSY CONJUNTO DE LLAVE IGNICION	1	1				
2	676–82577–01	.CAP, KEY .TAPA	1	1				
3	703–82532–00	.CAP .TAPA	1	1				
4	90464–08M07	CLAMP BRIDA	2	2				
5	69W–82575–00	ENGINE STOP SWITCH ASSY INTERRUPTOR DE PARADA COMPL	1	1				
6	682–82556–00	.LANYARD, STOP SWITCH .CORDON DE INTERRUPTOR PARADA	1	1				
7	689–8257Y–00	.CAP .TAPA	1	1				
8	6X4–82563–01	TRIM & TILT SWITCH ASSY INTERRUPTOR DE INCLINACION	1	1				
9	97980–06216	SCREW, WITH WASHER TORNILLO, CON ARANDELA	1	1				
10	6X4–83383–00	BUZZER ZUMBADOR	1	1				
11	6X4–83386–00	STAY, BUZZER TIRANTE DE ZUMBADOR	1	1				
12	97095–06014	BOLT PERNO	1	1				
13	6X4–83653–20	WIRE, LEAD (L:700MM) CABLE CONDUCTOR (L:700MM)	1	1				
14	6C5–84301–00	PILOT LIGHT ASSY 1 LUZ PILOTO COMPLETA 1	1	1				
15	6X4–44114–00	STOPPER RETEN	1	1				
16	97780–60620	SCREW, TAPPING TORNILLO DE CABEZA DE CONO ACH	2	2				
17	6X4–42727–00	GROMMET TAPON	1	1				
18	6H4–83589–00	GASKET EMPAQUE	1	1				
19	6X4–85415–00	MARK, SIGNAL LAMP MARCO DE FOCO DE SENAL	1	1				
20	6X4–81942–01	COVER CUBIERTA	1	1				

FIG. 50 OPTIONAL PARTS 3 — PARTES OPCIONALES 3

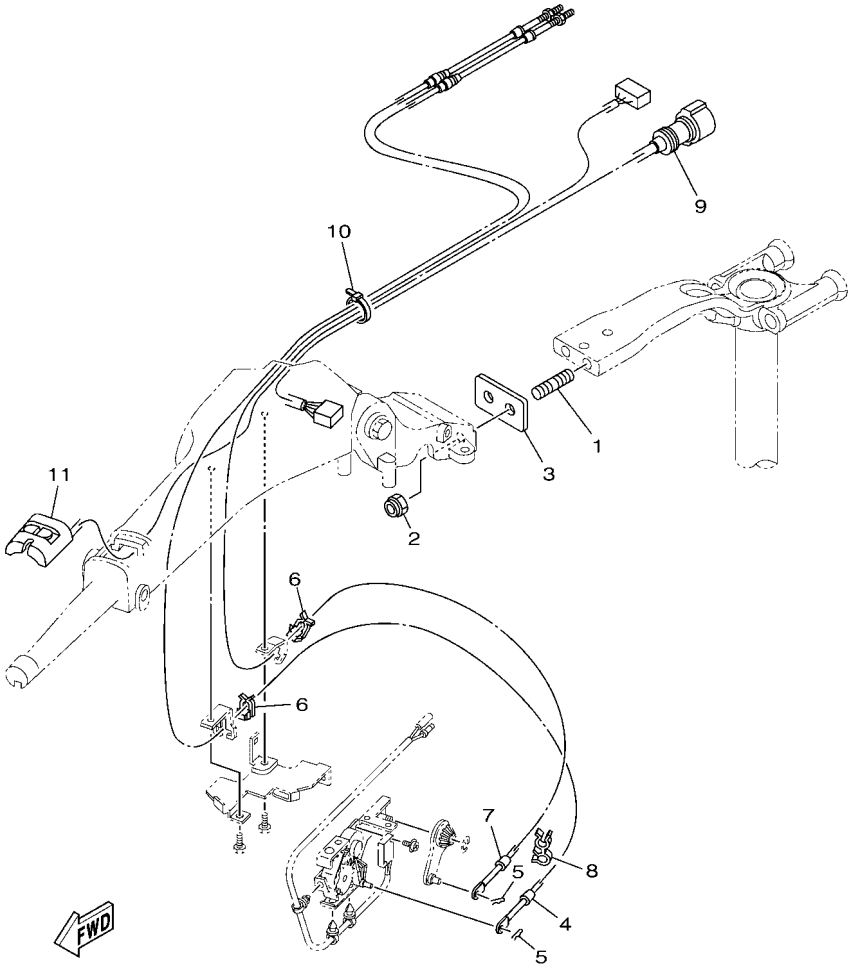

6EK4100-R360

REF. NO.	PART NO. CODIGO Nº	DESCRIPTION DESCRIPCION	ET	EHT	6EL4			REMARKS OBSERVACIONES
1	90116–10063	BOLT, STUD ESPARRAGO	2	2				
2	90185–10027	NUT, SELF-LOCKING TUERCA AUTOBLOCANTE	2	2				
3	6EK–42121–00	BRACKET SOPORTE	1	1				
4	6EK–48321–00	CABLE CABLE CONTROL REMOTO	1	1				
5	90468–10005	CLIP PRESILLA	2	2				
6	63D–48538–00	CLAMP, CABLE 1 GRAMPA DE CABLE	2	2				
7	6EK–26301–00	THROTTLE CABLE ASSY CABLE DE ACELERADOR COMPLETO	1	1				
8	90464–09M42	CLAMP BRIDA	1	1				
9	6X4–82586–10	EXT., WIRE HARNESS (L:950MM) EXT, CONJ. DE CABLES (L:950MM)	1	1				
10	90465–13M24	CLAMP BRIDA	1	1				
11	6X4–81860–00	SWITCH ASSY INTERRUPTOR COMPL	1	1				

FIG. 51 OPTIONAL PARTS 4 — PARTES OPCIONALES 4

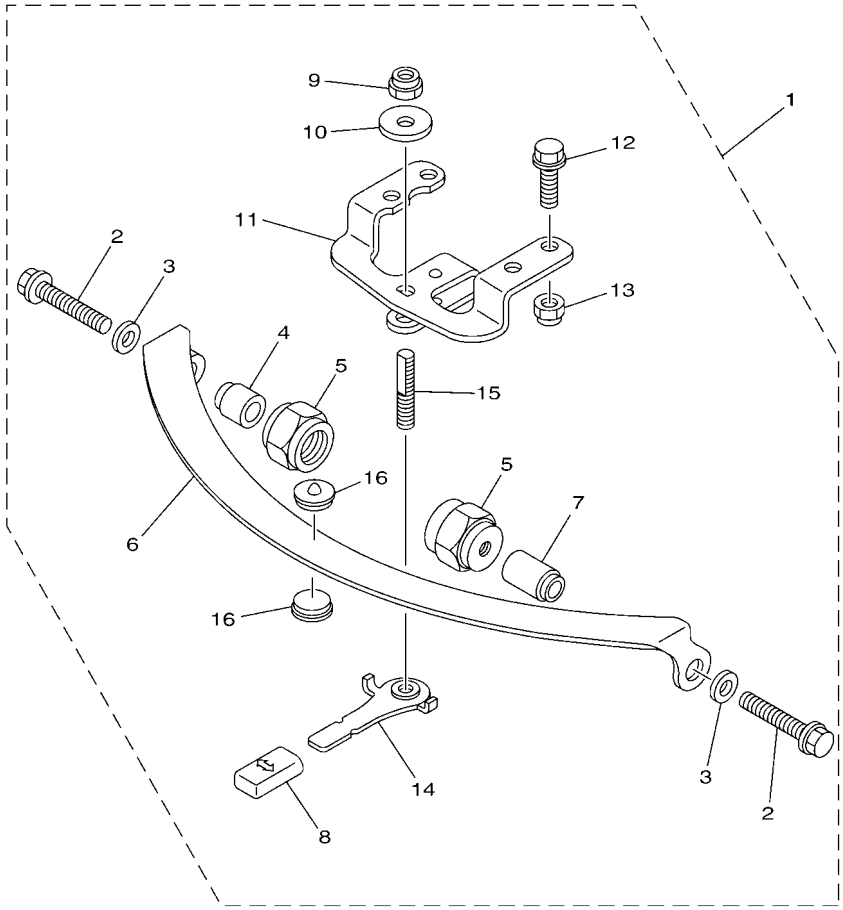

6FP1200-R390

REF. NO.	PART NO. CODIGO Nº	DESCRIPTION DESCRIPCION	ET	EHT	6EL4			REMARKS OBSERVACIONES
1	67G–42508–10	STEERING FRICTION ASSY DIRECCION FRICCION COMP.	1	1				
2	90119–08M74	.BOLT, WITH WASHER .TORNILLO CON ARANDELA	2	2				
3	90201–08M01	.WASHER, PLATE .ARANDELA PLANA	2	2				
4	67G–42541–00	.PIPE 1 .TUBO 1	1	1				
5	67G–42546–00	.NUT .TUERCA	2	2				
6	63D–42527–00	.PLATE, FRICTION .PLACA DE FRICCION	1	1				
7	67G–42541–10	.PIPE 1 .TUBO 1	1	1				
8	682–43318–01	.COVER .CUBIERTA	1	1				
9	90185–10M14	.NUT, SELF-LOCKING .TUERCA AUTOBLOCANTE	1	1				
10	90201–10M76	.WASHER, PLATE .ARANDELA PLANA	1	1				
11	6X4–42526–00	.PLATE, FRICTION .PLACA DE FRICCION	1	1				
12	97595–08525	.BOLT, WITH WASHER .PERNO CON ARANDELA	2	2				
13	90185–08057	.NUT, SELF-LOCKING .TUERCA AUTOBLOCANTE	2	2				
14	67G–42561–00	.KNOB, STEERING LOCK .PERILLA	1	1				
15	67G–42562–00	.SHAFT, STEERING LOCK .EJE,CERRADURA DE DIRECCION	1	1				
16	63D–42528–00	.PLATE, FRICTION .PIEZA DE FRICCION	2	2				

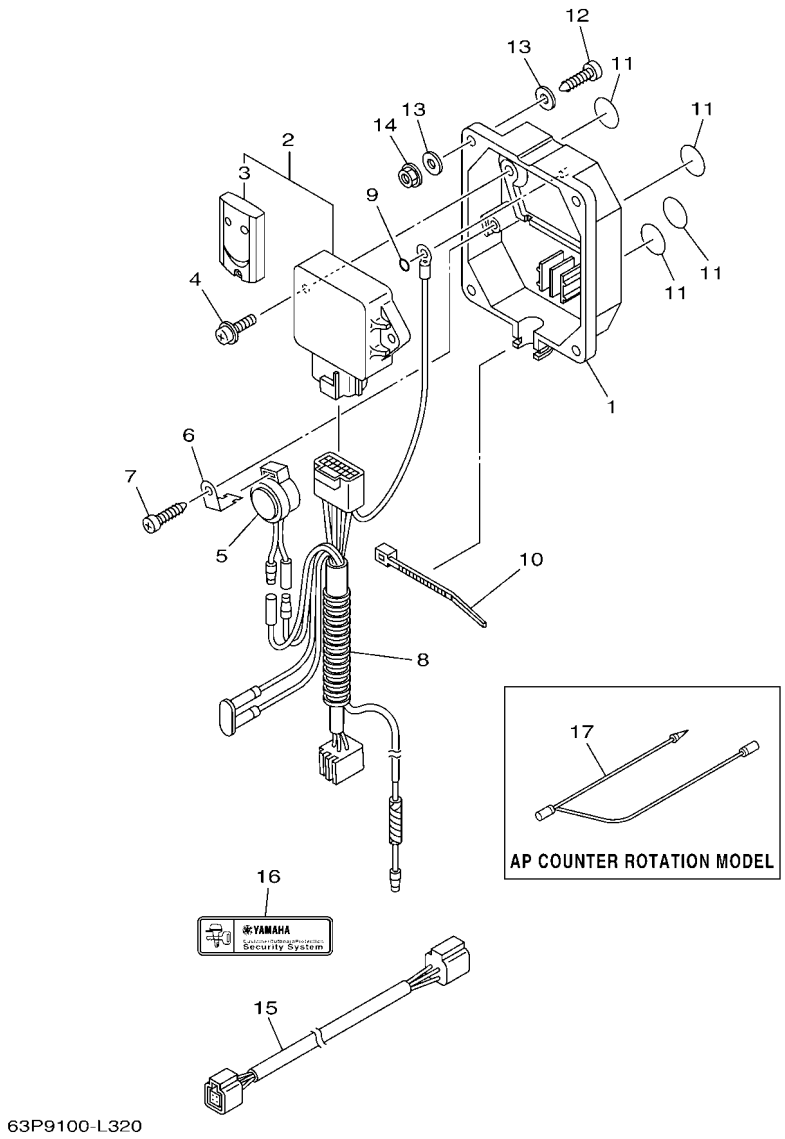

FIG. 52 OPTIONAL PARTS 5 — PARTES OPCIONLES 5

REF. NO.	PART NO. CODIGO Nº	DESCRIPTION DESCRIPCION	ET	EHT	6EL4			REMARKS OBSERVACIONES
1	6Y8–86267–00	CASE COMPLETE 1 CAJA COMPLETA 1	1					FOR CAR FOR CAR
2	6Y8–86260–12	REMOTE CONTROL UNIT ASSY UNIDAD DE CONTROL REMOTO COMPL	1					FOR CAR FOR CAR
3	6AA–86261–22	.XMTR. COMP. .XMTR. COMP.	2					
4	97980–06216	SCREW, WITH WASHER TORNILLO, CON ARANDELA	2					FOR CAR FOR CAR
5	6X4–83383–00	BUZZER ZUMBADOR	1					FOR CAR FOR CAR
6	6X4–83386–00	STAY, BUZZER TIRANTE DE ZUMBADOR	1					FOR CAR FOR CAR
7	97780–60620	SCREW, TAPPING TORNILLO DE CABEZA DE CONO ACH	1					FOR CAR FOR CAR
8	6Y8–82509–10	WIRE, SUB LEAD CABLE SUBCONDUCTOR	1					FOR CAR FOR CAR
9	93210–04279	O-RING ANILLO O	1					FOR CAR FOR CAR
10	90465–11M10	CLAMP BRIDA	1					FOR CAR FOR CAR
11	6Y8–8454G–00	PATCH 1 PARCHE 1	4					FOR CAR FOR CAR
12	90167–06M00	SCREW, TAPPING TORNILLO DE ROSCA HEMBRA	4					UR FOR CAR UR FOR CAR
	97880–06035	SCREW, PAN HEAD TORNILLO DE CABEZA CON PLANA	4					UR FOR CAR UR FOR CAR
13	90201–06M30	WASHER, PLATE ARANDELA PLANA	8					FOR CAR FOR CAR
14	95780–06300	NUT, FLANGE TUERCA	4					FOR CAR FOR CAR
15	6Y8–82521–11	2FT PIGTAIL BUS CABLE CONDUCTOR	1					FOR CAR FOR CAR
16	6Y8–48277–00	STICKER 1 ETIQUETTE 1	4					FOR CAR FOR CAR
17	6H5–81315–00	LEAD WIRE ASSY CABLE CONDUCTOR COMPLETO			1			AP AP

FIG. 53 OPTIONAL PARTS 6 — PARTES OPCIONALES 6

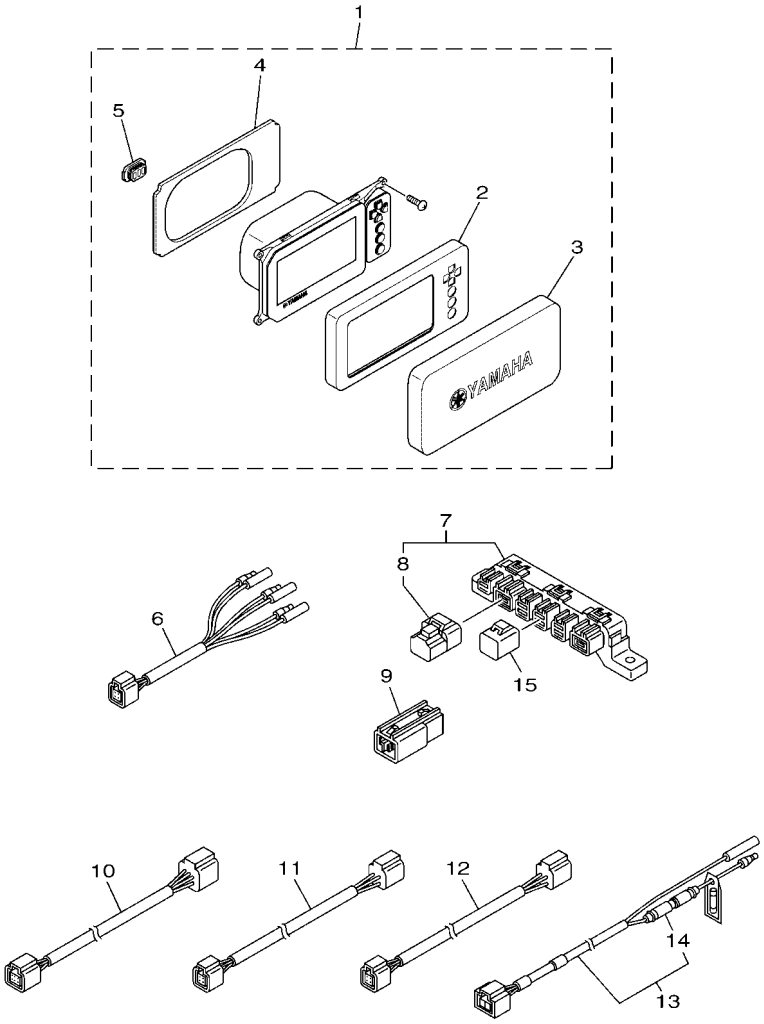

63PD370-P340

REF. NO.	PART NO. CODIGO Nº	DESCRIPTION DESCRIPCION	ET	EHT	6EL4			REMARKS OBSERVACIONES
1	6YC–83710–01	MULTI DISPLAY ASSY METRO DE INDICACION PLURAL	1					FOR CAR,OTH FOR CAR,OTH
2	6YC–83512–00	.RING, SPEED METER .ANILLO	1					
3	6YC–87278–00	.COVER, METER .CUBIERTA DE MEDIDOR	1					
4	6YC–12223–00	.SEAL .SELLO	1					
5	6YC–82532–00	.CAP .TAPA	1					
6	6Y8–8356N–01	LEAD, FUEL TANK & GPS SENDER CABLE CONDUCTOR	1					FOR CAR,OTH FOR CAR,OTH
7	6Y8–81920–01	MULTI HUB ASSY TERMINAL COMPLETO	1					FOR CAR,OTH FOR CAR,OTH
8	6Y8–85371–01	.END OF LINE RESISTER .RESISTOR	1					
9	6Y8–81920–11	IN-LINE HUB ASSY TERMINAL COMPLETO	1					FOR CAR,OTH FOR CAR,OTH
10	6Y8–82553–31	25FT MAIN BUS CABLE	1					FOR CAR,OTH FOR CAR,OTH
11	6Y8–82521–11	2FT PIGTAIL BUS CABLE CONDUCTOR	1					FOR CAR,OTH FOR CAR,OTH
12	6Y8–82521–51	12FT PIGTAIL BUS CABLE CONDUCTOR	1					FOR CAR,OTH FOR CAR,OTH
13	6Y8–83553–01	8FT POWER WIRE CABLE CONDUCTOR	1					FOR CAR,OTH FOR CAR,OTH
14	6G1–82151–00	.FUSE (10A) .FUSIBLE (10A)	1					
15	6Y8–82582–11	CAP 1 (4PIN) CUBIERTA DE ARNES DE CABLE	2					FOR CAR,OTH FOR CAR,OTH

FIG. 54 OPTIONAL PARTS 7 — PARTES OPCIONALES 7

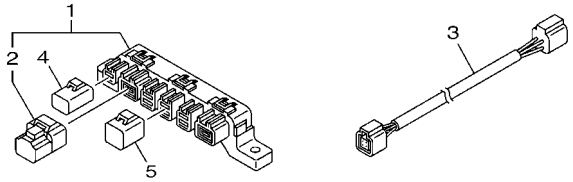

68VF200-P460

REF. NO.	PART NO. CODIGO Nº	DESCRIPTION DESCRIPCION	ET	EHT	6EL4			REMARKS OBSERVACIONES
1	6Y8–81920–01	MULTI HUB ASSY TERMINAL COMPLETO			1			FOR CAR,OTH FOR CAR,OTH
2	6Y8–85371–01	.END OF LINE RESISTER .RESISTOR			1			
3	6Y8–82521–51	12FT PIGTAIL BUS CABLE CONDUCTOR			1			FOR CAR,OTH FOR CAR,OTH
4	6Y8–82582–01	CAP 1 (2PIN) CUBIERTA DE ARNES DE CABLE			1			FOR CAR,OTH FOR CAR,OTH
5	6Y8–82582–11	CAP 1 (4PIN) CUBIERTA DE ARNES DE CABLE			3			FOR CAR,OTH FOR CAR,OTH

FIG. 55 OPTIONAL PARTS 8 — PARTES OPCIONALES 8

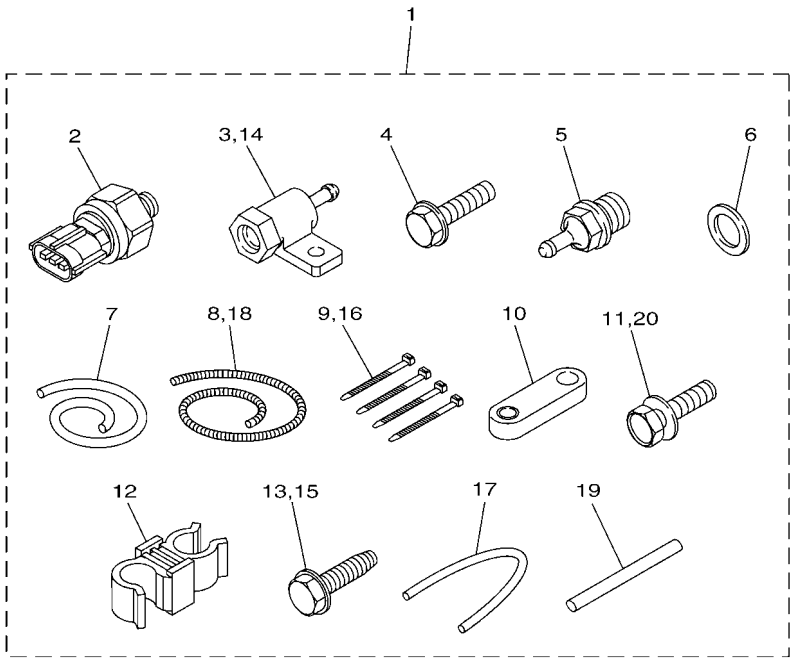

6EK2200-P490

REF. NO.	PART NO. CODIGO Nº	DESCRIPTION DESCRIPCION	ET	EHT	6EL4			REMARKS OBSERVACIONES
1	60V–8A4L2–04	SENSOR, MODULE 2 SENSOR COMP. 2	1					FOR CAR,OTH FOR CAR,OTH
2	6AW–8366B–01	.SENSOR, WATER PRESSURE .SENSOR DE PRESION AGUA	2					
3	60V–8366D–00	.ADAPTOR, INPUT .CONECTOR BANJO 3	1					
4	95895–06025	.BOLT, FLANGE .TORNILLO DE REBORDE	1					
5	60V–83667–00	.SENDER, WATER PRESSURE .TRANSMISOR DE PRESION AGUA	1					
6	90430–14115	.GASKET .JUNTA	1					
7	90445–07018	.HOSE (L1400) .TUBO (L1400)	1					
8	90447–07015	.HOSE, COVER (L: 1300MM) .MANGUERA DE CUBIERTA (L: 1300M	1					
9	90465–11M10	.CLAMP .BRIDA	4					
10	60V–8257V–00	.PLATE, CONNECTOR .PLACA DE CONECTOR	1					
11	97595–06516	.BOLT, WITH WASHER .PERNO CON ARANDELA	1					
12	90464–09021	.CLAMP .BRIDA	1					
13	90109–06M81	.BOLT .PERNO	1					
14	60V–8366D–00	.ADAPTOR, INPUT .CONECTOR BANJO 3	1					
15	90109–06M81	.BOLT .PERNO	1					
16	90465–11M10	.CLAMP .BRIDA	2					
17	90445–07017	.HOSE (L: 550MM) .TUBO (L: 550MM)	1					
18	90447–07013	.HOSE, COVER (L: 700MM) .MANGUERA DE CUBIERTA (L:700MM)	1					
19	60V–42629–00	.SEAL .SELLO 2	1					
20	97595–06516	.BOLT, WITH WASHER .PERNO CON ARANDELA	1					

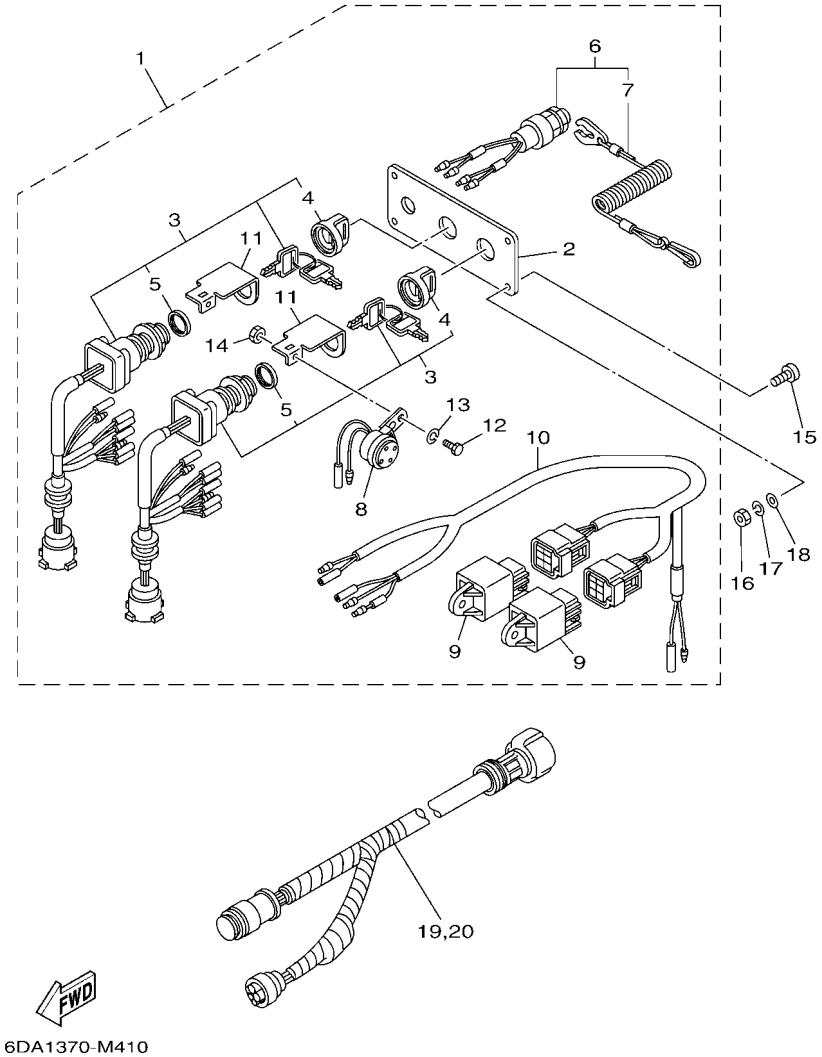

FIG. 56 OPTIONAL PARTS 9 — PARTES OPCIONALES 9

REF. NO.	PART NO. CODIGO Nº	DESCRIPTION DESCRIPCION	ET	EHT	6EL4			REMARKS OBSERVACIONES
1	6Y8–82570–04	PANEL SWITCH ASSY INTERRUPTOR DE PANEL COMPL.			1			FOR CAR,OTH FOR CAR,OTH
2	6Y8–82571–01	.PLATE, PANEL SWITCH .PANEL DE INTERRUPTOR			1			
3	6Y8–82510–03	.MAIN SWITCH ASSY .CONJUNTO DE LLAVE IGNICION			2			
4	676–82577–01	..CAP, KEY ..TAPA			1			
5	703–82532–00	..CAP ..TAPA			1			
6	6K1–82575–01	.ENGINE STOP SWITCH ASSY .INTERRUPTOR DE PARADA COMPL			1			
7	682–82556–00	..LANYARD, STOP SWITCH ..CORDON DE INTERRUPTOR PARADA			1			
8	6R5–83383–00	.BUZZER .ZUMBADOR			2			
9	68V–81950–00	.RELAY ASSY .RELE COMPLETO			2			
10	6Y8–82507–00	.LEAD, IGNITION SWITCH RELAY .CABLE CONDUCTOR			1			
11	64D–82581–00	.STAY, CORD CLAMP .SOPORTE DE GRAMPA DE CABLE			2			
12	97003–05012	.BOLT .PERNO			2			
13	92903–05100	.WASHER, SPRING .RONDANA SENCILLA			2			
14	95303–05700	.NUT .TUERCA			2			
15	90149–05M05	SCREW TORNILLO DE REGLAJE			4			FOR CAR,OTH FOR CAR,OTH
16	95380–05600	NUT TUERCA			4			FOR CAR,OTH FOR CAR,OTH
17	92990–05100	WASHER, SPRING ARANDELA PLANA			4			FOR CAR,OTH FOR CAR,OTH
18	92990–05600	WASHER, PLATE ARANDELA PLANA			4			FOR CAR,OTH FOR CAR,OTH
19	6K1–8258A–40	EXTENSION, WIRE HARNESS (8M) EXTENSION, ARNES DE CABLES (8M			1			FOR CAR,OTH (10P) FOR CAR,OTH (10P)
20	61B–8258A–01	EXTENSION, WIRE HARNESS (9.5M) EXTENSION, ARNES DE CABLES(9.5			1			FOR CAR,OTH (10P) FOR CAR,OTH (10P)

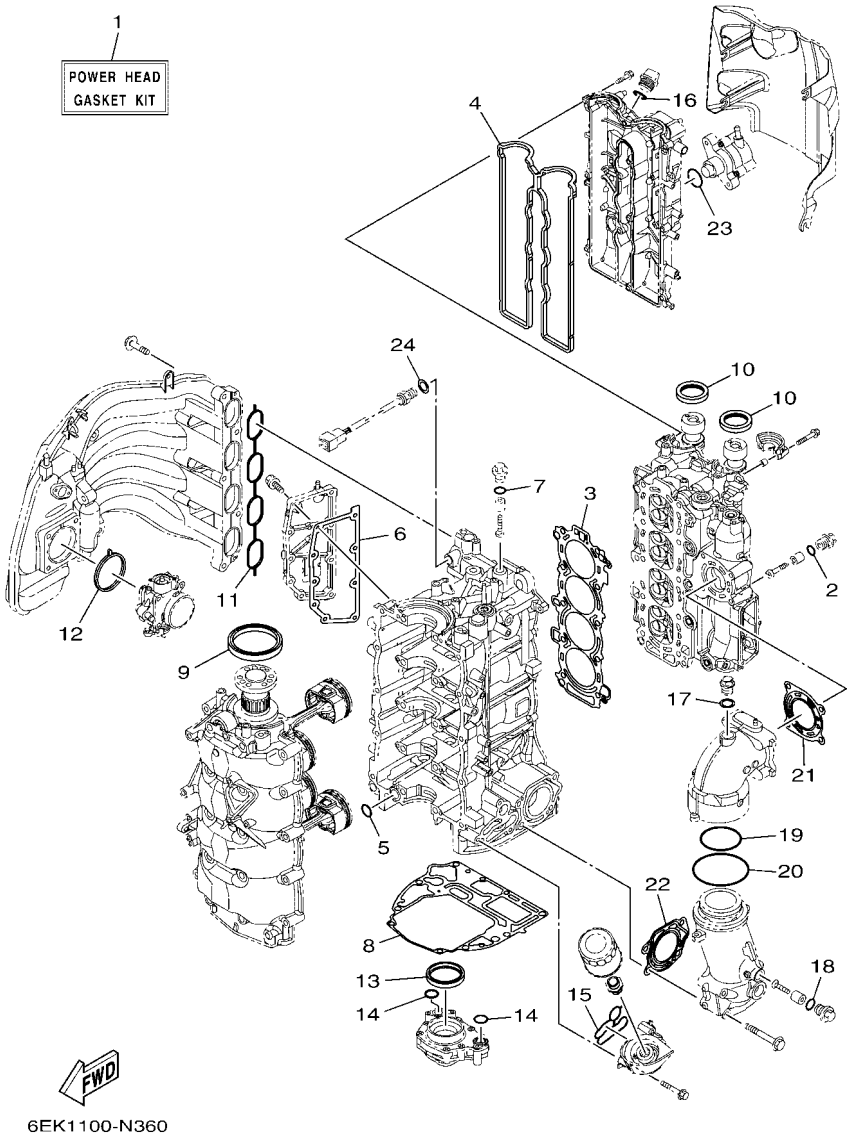

FIG. 57 REPAIR KIT 1 — ESTUCHE REPARATION 1

REF. NO.	PART NO. CODIGO Nº	DESCRIPTION DESCRIPCION	ET	EHT	6EL4			REMARKS OBSERVACIONES
1	6EK–W0001–00	POWER HEAD GASKET KIT JUEGO DE EMPAQUE DE MOTOR	1	1	1			
2	93210–13M63	.O-RING .ANILLO O	1	1	1			
3	6EK–11181–00	.GASKET, CYLINDER HEAD 1 .JUNTA, DE CULATA 1	1	1	1			
4	6EK–11193–00	.GASKET, HEAD COVER 1 .EMPAQUE	1	1	1			
5	93210–19MJ1	.O-RING .ANILLO O	1	1	1			
6	6EK–15353–00	.GASKET, DRAIN .JUNTA DE DRENAJE	1	1	1			
7	93210–13M63	.O-RING .ANILLO O	1	1	1			
8	6EK–11351–00	.GASKET, CYLINDER .JUNTA, DE CILINDRO	1	1	1			
9	93102–85008	.OIL SEAL .SELLO ACEITE	1	1	1			
10	93102–38008	.OIL SEAL .SELLO ACEITE	2	2	2			
11	6EK–13645–00	.GASKET, MANIFOLD 1 .EMPAQUE	1	1	1			
12	6EK–13646–00	.GASKET, MANIFOLD 2 .EMPAQ. DE MULTIPLE 2	1	1	1			
13	69J–11355–00	.SEAL, CYLINDER 1 .RETEN ACEITE CILINDRO 1	1	1	1			
14	93210–19MJ1	.O-RING .ANILLO O	2	2	2			
15	6EK–13475–00	.GASKET .EMPAQUE	1	1	1			
16	93210–24M79	.O-RING .ANILLO O	1	1	1			
17	90201–186F1	.WASHER, PLATE .ARANDELA PLANA	1	1	1			
18	93210–13M63	.O-RING .ANILLO O	1	1	1			
19	93210–64001	.O-RING .ANILLO O	1	1	1			
20	93210–84001	.O-RING .ANILLO O	1	1	1			
21	6EK–41114–00	.GASKET, EXHAUST OUTER COVER .EMPAQUE	1	1	1			
22	6EK–41124–00	.GASKET, EXHAUST OUTER COVER .EMPAQUE	1	1	1			
23	93210–30682	.O-RING .ANILLO O	1	1	1			
24	90430–14115	.GASKET .JUNTA	1	1	1			

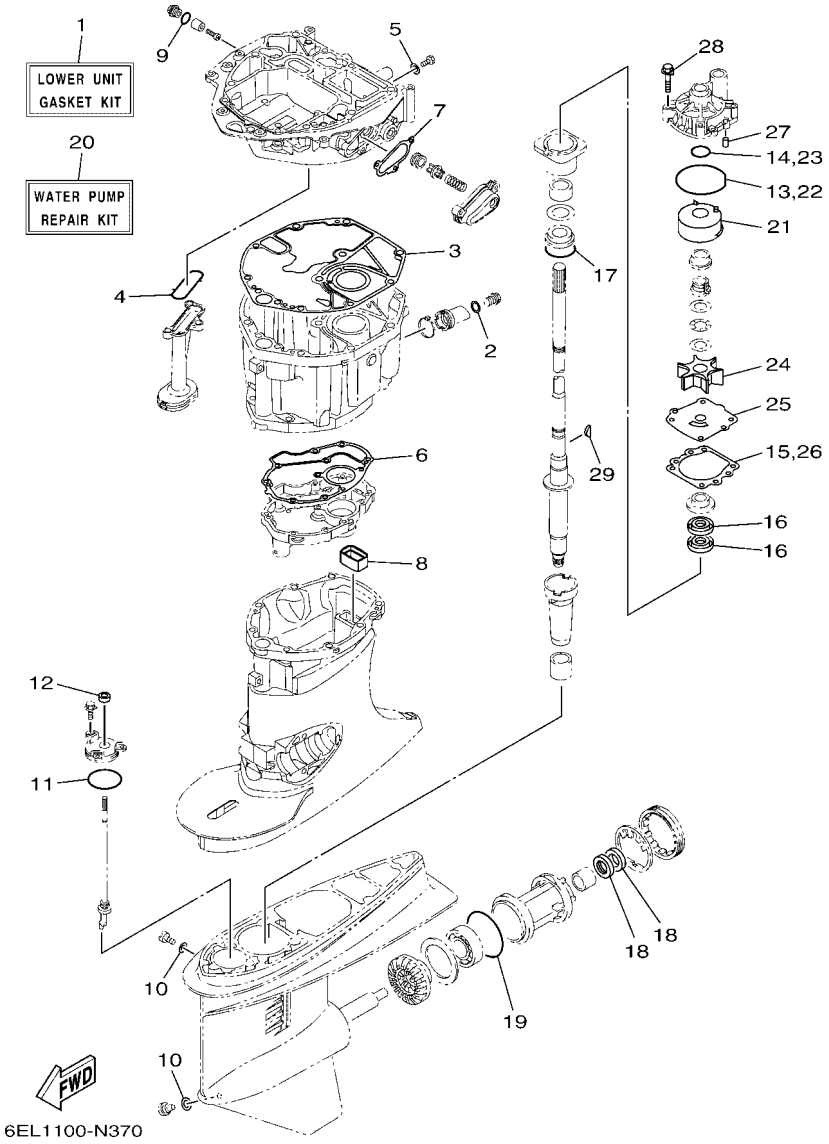

FIG. 58 REPAIR KIT 2 — ESTUCHE REPARATION 2

REF. NO.	PART NO. CODIGO Nº	DESCRIPTION DESCRIPCION	ET	EHT	6EL4			REMARKS OBSERVACIONES
1	6EK–W0001–20	LOWER UNIT GASKET KIT JUEGO DE EMPAQUE UNIDAD INFER.	1	1	1			
2	90430–14M09	.GASKET .JUNTA	1	1	1			
3	6EK–15312–00	.GASKET, OIL PAN .EMPAQ BANDEJA DE ACEITE	1	1	1			
4	67F–13415–00	.SEAL, OIL STRAINER .SELLO COLADOR ACEITE	1	1	1			
5	90430–08143	.GASKET .JUNTA	1	1	1			
6	6EK–41134–00	.GASKET, EXHAUST MANIFOLD .EMPAQUE	1	1	1			
7	6EK–12435–A0	.GASKET .EMPAQUE	1	1	1			
8	67F–45127–00	.SEAL .SELLO DE GOMA	1	1	1			
9	93210–13M63	.O-RING .ANILLO O	1	1	1			
10	90430–08003	.GASKET .JUNTA	2	2	2			
11	93210–58144	.O-RING .ANILLO O	1	1	1			
12	93106–09014	.OIL SEAL .SELLO ACEITE	1	1	1			
13	93210–86M38	.O-RING .ANILLO O	1	1	1			
14	93210–37160	.O-RING .ANILLO O	1	1	1			
15	6E5–44315–A0	.GASKET, WATER PUMP .EMPAQUE	1	1	1			
16	93101–28M16	.OIL SEAL .SELLO ACEITE	2	2	2			
17	93210–55M14	.O-RING .ANILLO O	1	1	1			
18	93101–30M17	.OIL SEAL .SELLO ACEITE	2	2	2			
19	93210–86M39	.O-RING .ANILLO O	1	1	1			
20	68V–W0078–00	WATER PUMP REPAIR KIT ESTUCHE REPARACION BOMBA AGUA	1	1	1			
21	61A–44322–02	.INSERT, CARTRIDGE .CARTUCHO	1	1	1			
22	93210–86M38	.O-RING .ANILLO O	1	1	1			
23	93210–37160	.O-RING .ANILLO O	1	1	1			
24	6E5–44352–01	.IMPELLER .IMPULSOR	1	1	1			
25	6EK–44323–00	.OUTER PLATE, CARTRIDGE .PLACA EXTERIOR DEL CARTUCHO	1	1	1			
26	6E5–44315–A0	.GASKET, WATER PUMP .EMPAQUE	1	1	1			
27	93606–12019	.PIN, DOWEL .PASADOR DE CLAVIJA	2	2	2			

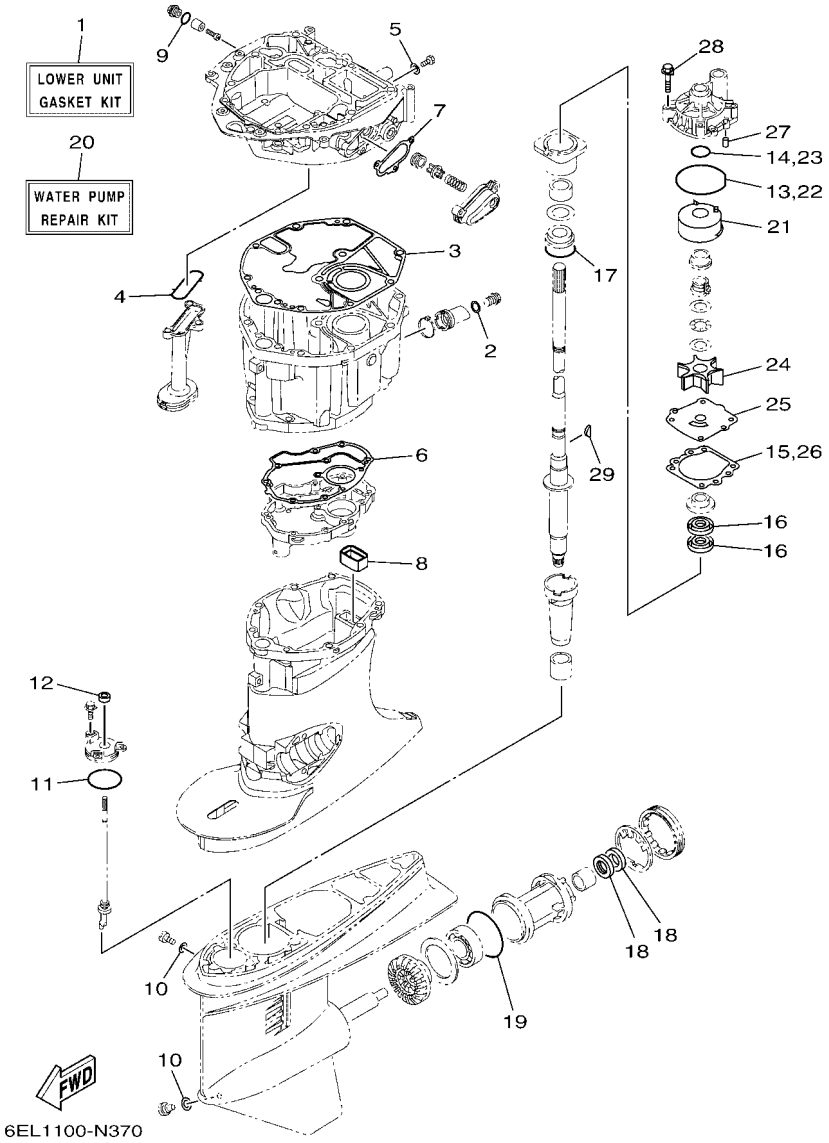

FIG. 58 REPAIR KIT 2 — ESTUCHE REPARATION 2

REF. NO.	PART NO. CODIGO Nº	DESCRIPTION DESCRIPCION	ET	EHT	6EL4			REMARKS OBSERVACIONES
28	90119–08M14	.BOLT, WITH WASHER .TORNILLO CON ARANDELA	4	4	4			
29	90280–04M05	.KEY, WOODRUFF .CUNA WOODRUFF	1	1	1			

NUMERICAL INDEX
INDICE NUMERICO

PART NO. CODIGO Nº	REF. NO.
6EK–11110–00–9S	5 – 2
6EK–11119–00	5 – 32
6DA–11133–10	5 – 3
6EK–11168–00	5 – 26
6EK–11181–00	5 – 21
	57 – 3
6EK–11191–00	5 – 25
6EK–11192–00	5 – 30
6EK–11193–00	5 – 28
	57 – 4
6G8–11197–A0	3 – 13
	5 – 13
	12 – 7
	32 – 30
69J–11301–00	5 – 15
6EK–11325–00	1 – 7
	12 – 6
6G8–11325–00	1 – 1
	1 – 4
	1 – 15
	3 – 11
	5 – 11
	32 – 28
63P–11325–01	1 – 2
	3 – 15
67F–11325–01	1 – 5
	5 – 16
67F–11328–00	5 – 17
6EK–11351–00	3 – 23
	57 – 8
69J–11355–00	33 – 14
	57 – 13
6CJ–11372–00	7 – 25
6EK–11410–01	4 – 1
6EK–11416–00	4 – 5
6EK–11416–10	4 – 5
6EK–11416–20	4 – 5
6EK–11416–30	4 – 5
6EK–11416–40	4 – 5
6EK–11417–00	4 – 6
6EK–11417–10	4 – 6
6EK–11417–20	4 – 6
6EK–11417–30	4 – 6
6EK–11417–40	4 – 6
6EK–11426–01	4 – 7
6EK–11427–00	4 – 8
6CB–11478–00	4 – 2
6EK–11537–00	6 – 12

PART NO. CODIGO Nº	REF. NO.
6EK–11567–00	6 – 13
6EK–11590–00	6 – 17
6EK–11603–00	4 – 12
6EK–11604–00	4 – 12
6EK–11631–00–93	4 – 11
6EK–11633–00	4 – 13
6EK–11635–00	4 – 11
6EK–11656–00	4 – 15
6EK–11656–10	4 – 15
6EK–11656–20	4 – 15
6EK–11656–30	4 – 15
6EK–11656–40	4 – 15
6EK–12111–00	6 – 1
30X–12114–00	6 – 4
62Y–12116–00	6 – 3
30X–12117–00	6 – 5
30X–12118–00	6 – 6
51Y–12119–00	6 – 7
6EK–12121–00	6 – 2
6D8–12153–00	6 – 8
6D8–12153–10	6 – 8
6D8–12153–20	6 – 8
6D8–12153–30	6 – 8
6D8–12153–40	6 – 8
6D8–12153–50	6 – 8
6D8–12153–60	6 – 8
6D8–12153–70	6 – 8
6D8–12153–80	6 – 8
6D8–12153–90	6 – 8
6D8–12153–A0	6 – 8
6D8–12153–B0	6 – 8
6D8–12153–C0	6 – 8
6D8–12153–D0	6 – 8
6D8–12153–E0	6 – 8
6D8–12153–F0	6 – 8
6D8–12153–G0	6 – 8
6D8–12153–H0	6 – 8
6D8–12153–J0	6 – 8
6D8–12153–K0	6 – 8
6D8–12153–L0	6 – 8
6D8–12153–M0	6 – 8
6D8–12153–N0	6 – 8
6D8–12153–P0	6 – 8
6D8–12153–R0	6 – 8
6D8–12153–S0	6 – 8
6D8–12153–T0	6 – 8
6D8–12153–U0	6 – 8
6D8–12153–V0	6 – 8

PART NO. CODIGO Nº	REF. NO.
6EK–12171–00	6 – 9
6EK–12181–00	6 – 10
6EK–12181–00	53 – 4
6EK–12411–00	1 – 6
	3 – 17
6EK–12412–00	3 – 18
6EK–12413–00	3 – 19
6G5–12416–00	32 – 19
6EK–12435–A0	32 – 23
	58 – 7
6EK–1243A–00	3 – 21
6EK–1246A–00–9S	32 – 22
6EK–12483–00	3 – 24
6AW–12572–00	23 – 5
6EK–12576–00	9 – 8
6EK–12577–00	9 – 9
6R3–12581–00	23 – 7
6R3–12582–00	23 – 8
6R3–12583–00	23 – 9
6CB–13016–00	1 – 9
	10 – 5
6AW–13119–00	33 – 12
63P–13131–00	13 – 19
6AW–13132–00	10 – 21
6EK–13152–02	7 – 9
6EK–13160–00	8 – 3
6EK–13161–00	8 – 4
6EK–13300–00	33 – 10
6EK–13329–00	33 – 11
67F–13411–00	33 – 7
67F–13415–00	33 – 9
	58 – 4
6EK–13437–61	15 – 21
5GH–13440–70	1 – 3
	3 – 28
6EK–13446–00	3 – 30
6CB–13473–00	3 – 27
6EK–13475–00	3 – 31
	57 – 15
6EK–13490–00	3 – 26
6EK–13532–00	9 – 1
6EK–13543–00	7 – 27
6AW–13545–10	9 – 11
6EK–13546–00	9 – 16
6EK–13547–00	9 – 19
6EK–13548–01	9 – 22
6AW–13577–10	8 – 7
6CB–13593–00	10 – 18

PART NO. CODIGO Nº	REF. NO.
69J–13631–00	33 – 13
6EK–13641–00	7 – 12
6EK–13645–00	7 – 13
	57 – 11
6EK–13646–00	7 – 14
	57 – 12
6C5–13713–00	7 – 22
69J–13716–00	10 – 17
6EK–13751–00	7 – 1
6EK–13761–00	8 – 5
6AW–13781–00	10 – 25
6AW–13784–00	10 – 28
6EK–13843–00	7 – 28
6EK–13881–00	7 – 29
68V–13897–00	7 – 24
6CB–13906–01	10 – 8
68V–13907–20	10 – 19
68V–13907–30	10 – 19
63P–13915–00	1 – 10
	10 – 20
6AW–1410B–00	8 – 6
6X4–14137–00	24 – 26
	48 – 25
6DA–14146–00	10 – 10
6EK–14180–00	10 – 1
6EK–14180–10	10 – 1
6EK–14181–00	10 – 11
6EK–14182–00	10 – 2
6EK–14182–10	10 – 2
6P2–14191–00	10 – 12
6AW–14197–00	10 – 31
68V–14216–00	10 – 33
6CB–14216–00	10 – 6
6EK–14291–00	8 – 10
6P2–14386–00	10 – 27
6P2–1441J–00	7 – 19
6DA–14440–00	7 – 18
6CB–1447B–00	10 – 24
6CB–14546–00	10 – 23
6CB–14564–00	10 – 9
63P–14567–00	10 – 16
5PS–14568–00	9 – 2
6K8–14591–10	10 – 14
68V–14592–10	10 – 30
6EK–14615–00	12 – 1
6EK–14625–00	12 – 4
6EK–1475A–00	9 – 6
6EK–1475F–00	9 – 23

PART NO. CODIGO Nº	REF. NO.
6EK–1475G–00	9 – 3
	9 – 25
6EK–1475H–00	10 – 34
6EK–1475J–00	10 – 35
6CB–14984–00	1 – 11
	10 – 26
6CB–14985–00	10 – 22
6EK–14989–00	9 – 24
6EK–15109–01–9S	3 – 2
6EK–15311–01	33 – 1
6EK–15312–00	33 – 6
	58 – 3
6EK–15316–00	33 – 18
6EK–15353–00	3 – 9
	57 – 6
6EK–15362–10	33 – 17
6G8–15363–00	5 – 34
6EK–15373–00	7 – 16
6EK–15393–00	7 – 17
6EK–15414–00–9S	3 – 8
6EK–2134X–00	8 – 15
63D–21744–00	9 – 21
6E5–21744–00	9 – 20
6EK–22434–00	30 – 23
6EK–22471–01	30 – 18
68V–24149–00	13 – 27
6EK–2416A–01	9 – 5
6P2–24170–00	8 – 13
6EK–2419A–00	8 – 14
6CB–24217–00	10 – 7
6CB–24217–10	10 – 7
6C5–24251–00	11 – 3
6Y2–24307–60	14 – 2
6EK–24311–00	13 – 15
6EK–24314–00	13 – 3
6EK–24330–00	11 – 2
6E5–24351–51	13 – 4
	14 – 4
6Y2–24360–60	14 – 5
6YK–24360–73	14 – 1
68V–24374–00	13 – 22
6AW–24377–01	13 – 2
688–24378–00	9 – 14
68V–24379–10	10 – 32
6EK–24410–00	13 – 16
68V–24411–00	13 – 21
68V–24412–00	13 – 17
6EK–24413–00	13 – 23

PART NO. CODIGO Nº	REF. NO.
6EK–24414–00	13 – 25
63P–24423–00	13 – 20
68V–24444–00	13 – 26
6EK–24452–00	10 – 13
4SV–24453–00	10 – 29
69J–24453–00	10 – 29
68V–24454–00	13 – 18
6D8–24469–00	13 – 9
68V–24471–10	13 – 24
6EK–24478–00	10 – 3
6EK–24481–00	10 – 4
6CB–24482–00	10 – 15
6EK–2450B–00	11 – 1
6D8–24519–00	13 – 10
6EK–24560–00	13 – 5
6D8–24562–00	13 – 8
6D8–24563–00	1 – 12
	13 – 6
6D8–24564–00	1 – 13
	13 – 7
6EK–24566–00	13 – 12
6EK–24568–00	13 – 13
6EK–26301–00	24 – 40
	50 – 7
6X4–26367–00	24 – 35
	24 – 42
	48 – 33
	48 – 36
67F–28100–01	13 – 31
67F–28100–10	13 – 31
67F–2812A–00	17 – 27
6EK–41114–00	12 – 12
	57 – 21
6EK–41124–00	12 – 13
	57 – 22
6EK–41134–00	32 – 9
	58 – 6
6EK–41137–01	32 – 1
6EK–41213–00	27 – 34
6EK–41237–00	27 – 45
6EK–41237–10	27 – 38
6X4–41291–00	24 – 8
	48 – 7
6EK–41635–00	27 – 39
6EK–41662–00	27 – 40
6BC–42101–40	24 – 1
6X4–42111–02–8D	24 – 2
	48 – 1

NUMERICAL INDEX
INDICE NUMERICO

PART NO. CODIGO Nº	REF. NO.
6X4–42115–00	24 – 22
	48 – 21
6X4–42119–01	24 – 5
	48 – 4
6EK–42121–00	29 – 31
	38 – 24
	50 – 3
63D–42121–22–8D	24 – 55
	48 – 47
63D–42126–00	24 – 17
	48 – 16
6X4–42128–00	24 – 13
	48 – 12
6X4–42131–11	24 – 52
	48 – 44
6X4–42137–00	24 – 7
	48 – 6
6EK–42154–00	27 – 30
6EK–42157–00	27 – 42
6X4–42159–00	24 – 46
	48 – 38
68V–42171–00	27 – 31
6X4–42177–00	24 – 6
	48 – 5
6BG–42384–00	23 – 3
67G–42508–10	26 – 1
	51 – 1
6EK–42510–00–8D	29 – 6
6EK–42510–10–8D	29 – 6
6X4–42526–00	26 – 11
	51 – 11
63D–42527–00	26 – 6
	51 – 6
63D–42528–00	26 – 16
	51 – 16
67G–42541–00	26 – 4
	51 – 4
6EK–42541–00	23 – 10
67G–42541–10	26 – 7
	51 – 7
6EM–42542–00	12 – 16
67G–42546–00	26 – 5
	51 – 5
67G–42561–00	26 – 14
	51 – 14
67G–42562–00	26 – 15
	51 – 15
6EK–42610–00	2 – 1

PART NO. CODIGO Nº	REF. NO.
6EK–42615–01	2 – 14
6EK–42617–00	15 – 12
6EK–4261A–00	2 – 2
60V–42629–00	55 – 19
6EK–42646–00	2 – 4
6EK–42647–00	2 – 5
6EK–42662–00	2 – 13
68F–42663–00	2 – 12
6EK–42675–00	2 – 18
6EK–42676–00	2 – 20
68V–42677–30	2 – 16
68V–42678–41	2 – 17
6D6–42681–00	2 – 19
6DA–42697–00	2 – 15
6EK–42710–00	22 – 1
648–42715–00	27 – 26
6EK–42716–00	22 – 26
67F–42717–00	22 – 22
6EK–42725–00	22 – 17
6X4–42725–01	24 – 54
	48 – 46
6AH–42726–00	23 – 11
6H1–42726–30	23 – 1
6EK–42727–00	32 – 6
6X4–42727–00	25 – 18
	49 – 17
6EK–42728–00	22 – 16
6X4–42728–10	24 – 64
	48 – 56
6EK–42741–00–8D	23 – 18
6H4–42748–00	22 – 21
68F–42753–00	22 – 28
69M–42758–01	17 – 12
6CB–42761–00	22 – 19
6EK–42769–00	32 – 17
6EE–42794–40	22 – 29
6EE–42794–50	22 – 30
6AH–42794–70	22 – 29
6EK–42815–01–8D	22 – 5
6EK–42816–01–8D	22 – 6
6CB–42818–00	22 – 11
6X4–42821–00	24 – 30
	48 – 29
6EK–43111–00–8D	28 – 1
6EK–43112–00–8D	28 – 2
6EK–43126–00	28 – 27
64E–43131–30	28 – 9
64E–43139–10	29 – 3

PART NO. CODIGO Nº	REF. NO.
66T–43144–00	22 – 14
	28 – 21
66T–43144–00	38 – 7
6G5–43148–00	28 – 18
6EK–43181–00	28 – 15
6EK–43185–00	28 – 16
6EK–43311–00–8D	28 – 5
6EK–43311–10–8D	28 – 5
682–43318–01	26 – 8
	51 – 8
6EK–43800–02	30 – 1
6EK–43804–11	31 – 3
6EK–43805–00	31 – 2
6EK–4380F–00	31 – 6
6C5–4380G–00	30 – 33
6EK–4380K–02	30 – 29
6EK–4380P–00	30 – 10
6EK–4380R–00	30 – 7
6EK–43810–00	30 – 2
6EK–43811–00	30 – 9
6H1–43812–00	30 – 3
6C5–43816–00	30 – 32
6C6–43817–00	30 – 30
6EK–43818–00	28 – 31
6EK–4381B–00	30 – 20
6EK–43821–00	30 – 4
6EK–43829–00	30 – 26
6EK–4382E–00	30 – 39
6D8–4382L–00	30 – 62
6EK–43830–00	30 – 35
6EK–43831–00	30 – 63
6D8–43841–00	30 – 55
6D8–43843–00	30 – 50
6D8–43844–00	30 – 48
6H1–43844–10	30 – 59
6EK–43845–00	30 – 66
69A–4384F–00	30 – 56
6H1–4384G–11	30 – 58
62X–4384H–00	30 – 22
	30 – 28
6D8–4384M–00	30 – 37
6D8–43851–00	30 – 45
6C6–43853–00	30 – 41
6C5–43854–00	30 – 52
6C5–43855–10	30 – 46
6EK–43856–00	30 – 49
6D8–43861–00	30 – 6
	30 – 8

PART NO. CODIGO Nº	REF. NO.
6EK–43861–00	30 – 5
6H1–43862–00	30 – 11
	30 – 15
6D8–43863–00	30 – 64
67F–43865–00	30 – 14
62X–4386K–00	31 – 7
6EK–43875–00	30 – 19
6H1–43875–00	30 – 65
63P–43879–10	31 – 8
6C6–4387G–00	30 – 42
6EK–43880–11	30 – 68
	31 – 1
6EK–43881–11	31 – 10
6EK–43882–00	31 – 11
6H1–43883–00	30 – 38
6EK–43892–00	31 – 4
6C5–43895–00	30 – 51
6EK–43899–00	30 – 21
69J–4389J–00	30 – 31
	30 – 36
6X4–44100–01	24 – 21
	48 – 20
6X4–44102–00	24 – 23
	48 – 22
6X4–44114–00	25 – 16
	49 – 15
6EK–44117–01	27 – 8
6EK–44118–00	27 – 22
6EK–44120–00	27 – 17
6EK–44120–10	27 – 17
6EK–44121–00	27 – 15
63P–44122–00	27 – 12
6X4–44132–00	24 – 25
	48 – 24
6EK–44135–00	27 – 35
6X4–44139–01	24 – 9
	48 – 8
6L6–44150–02	36 – 19
6E5–44150–03	34 – 17
6X4–44159–00–8D	24 – 47
	48 – 39
6X4–44173–00	24 – 48
	48 – 40
6X4–44177–00	24 – 12
	48 – 11
6X4–44188–00	24 – 15
	48 – 14
703–44189–20	40 – 36

PART NO. CODIGO Nº	REF. NO.
703–44189–20	41 – 36
703–44189–30	40 – 42
	41 – 42
6X3–44191–00	24 – 50
	40 – 47
	41 – 47
	48 – 42
61A–44311–01	34 – 23
	36 – 25
6E5–44312–00	35 – 18
	37 – 18
6E5–44315–A0	34 – 30
	36 – 32
	58 – 15
	58 – 26
61A–44322–02	34 – 24
	36 – 26
	58 – 21
6EK–44323–00	34 – 29
	36 – 31
	58 – 25
6E5–44352–01	34 – 27
	36 – 29
	58 – 24
6E5–44365–00	35 – 17
	37 – 17
6EK–44365–01	35 – 3
	37 – 3
6E5–44366–00	35 – 1
	37 – 1
6EK–44379–00	35 – 4
	37 – 4
6P2–44391–00	23 – 4
	23 – 13
6EK–44514–00	29 – 23
6EK–44526–00	29 – 26
6EK–44536–00	28 – 37
6EK–44551–00–8D	29 – 12
6EK–44553–00–8D	29 – 21
63P–44555–00	29 – 15
61A–44575–00	29 – 14
6EK–45111–00–8D	32 – 11
6EK–45111–10–8D	32 – 11
67F–45127–00	32 – 25
	58 – 8
6EK–45135–00	32 – 26
6C5–45155–00	32 – 18
6EK–45181–01	32 – 10

PART NO. CODIGO Nº	REF. NO.
688–45214–02	35 – 10
	37 – 10
688–45215–02	35 – 11
	37 – 11
6H1–45251–03	1 – 14
	28 – 35
6EK–45300–00–8D	34 – 1
6EK–45300–10–8D	34 – 1
6EL–45300–10–8D	36 – 1
6E5–45301–07–8D	34 – 2
	36 – 2
6EK–45318–00	32 – 27
6E5–45321–00	34 – 13
	36 – 15
6E5–45331–00–9S	34 – 33
	36 – 35
6E5–45332–00–CA	34 – 55
6L6–45332–00–CA	36 – 58
688–45341–10	34 – 7
	36 – 9
6E5–45344–00	34 – 39
	36 – 41
6L6–45371–00	1 – 18
	37 – 14
6E5–45371–01	1 – 18
	35 – 14
688–45375–00	35 – 9
	37 – 9
663–45376–00	35 – 8
	37 – 8
6E5–45378–00	34 – 10
	36 – 12
688–45383–02	34 – 65
	36 – 69
688–45384–02	34 – 66
	36 – 70
6EK–45501–00	34 – 41
6EK–45501–10	34 – 41
	36 – 43
61A–45527–00	34 – 22
	36 – 24
6E5–45536–00	34 – 9
	36 – 11
61A–45538–00	34 – 19
	36 – 21
6L6–45538–00	36 – 6
68V–45551–00	34 – 42
	36 – 44

NUMERICAL INDEX
INDICE NUMERICO

PART NO. CODIGO Nº	REF. NO.
68V–45560–00	34 – 44
68W–45560–00	36 – 46
6E5–45567–01	34 – 5
	36 – 7
6E5–45567–10	34 – 5
	36 – 7
6E5–45567–20	34 – 5
	36 – 7
6E5–45567–30	34 – 5
	36 – 7
6E5–45567–40	34 – 5
	36 – 7
6E5–45567–50	34 – 5
	36 – 7
6E5–45567–60	34 – 5
	36 – 7
68W–45570–10	36 – 60
68V–45571–00	34 – 57
6E5–45576–00	34 – 58
6L6–45576–00	36 – 61
6L6–45577–00	34 – 62
	36 – 67
6L6–45577–10	34 – 62
	36 – 67
6L6–45577–20	34 – 62
	36 – 67
6L6–45577–30	34 – 62
	36 – 67
6L6–45577–40	34 – 62
	36 – 67
6L6–45577–50	34 – 62
	36 – 67
6L6–45577–60	34 – 62
	36 – 67
6K1–45578–01	36 – 63
6K1–45578–10	36 – 63
6K1–45578–20	36 – 63
6K1–45578–30	36 – 63
6K1–45578–40	36 – 63
6K1–45578–50	36 – 63
6K1–45578–60	36 – 63
6E5–45587–01	34 – 36
	36 – 38
6E5–45587–10	34 – 36
	36 – 38
6E5–45587–20	34 – 36
	36 – 38
6E5–45587–30	34 – 36

PART NO. CODIGO Nº	REF. NO.
6E5–45587–30	36 – 38
6E5–45587–40	34 – 36
	36 – 38
6E5–45587–50	34 – 36
	36 – 38
6E5–45587–60	34 – 36
	36 – 38
68W–45611–00	36 – 49
6E5–45611–01	34 – 46
68V–45631–01	34 – 53
	36 – 56
6E5–45633–01	34 – 54
	36 – 57
6E5–45634–02	34 – 47
	36 – 50
6L6–45930–01	37 – 24
688–45930–02	35 – 24
688–45932–60	35 – 24
6E5–45941–00	35 – 24
6EK–45941–00	35 – 25
6E5–45943–00	35 – 24
6EK–45943–00	35 – 25
6EK–45945–00	35 – 25
6E5–45945–01	35 – 24
6E5–45947–00	35 – 24
6EK–45947–00	35 – 25
6E5–45949–00	35 – 24
6EK–45949–00	35 – 25
6E5–45952–00	35 – 24
6E5–45954–00	35 – 24
6E5–45956–00	35 – 24
6E5–45958–00	35 – 24
6L6–45970–00	37 – 24
688–45970–03	35 – 24
6L6–45972–00	37 – 24
688–45972–02	35 – 24
688–45974–02	35 – 24
688–45976–01	35 – 24
688–45978–60	35 – 24
6EK–45982–00	35 – 26
63P–45987–00	35 – 19
	37 – 19
688–45997–01	35 – 20
	37 – 20
6EK–45C82–09	35 – 27
6X4–47731–01	24 – 24
	48 – 23
704–48119–50	42 – 11

PART NO. CODIGO Nº	REF. NO.
704–48119–60	43 – 11
EL8–48127–00	42 – 24
	43 – 24
704–48128–00	43 – 64
703–48128–10	40 – 39
	41 – 39
703–48129–00	24 – 29
	40 – 41
	41 – 41
	48 – 28
704–48129–10	42 – 2
	43 – 2
704–48129–60	43 – 69
704–48144–10	42 – 53
704–48144–20	43 – 53
703–48152–10	40 – 6
	41 – 6
703–48153–00	40 – 61
	41 – 61
704–48153–00	42 – 58
	43 – 58
6X4–48154–00	24 – 18
	48 – 17
704–48156–00	43 – 65
EL8–48164–00	42 – 42
	43 – 42
704–48166–00	42 – 59
	43 – 70
704–48167–20	42 – 62
704–48167–30	43 – 72
704–48176–00	42 – 54
704–48176–10	43 – 54
704–48178–00	43 – 71
704–48178–10	42 – 61
703–48189–00	40 – 19
	41 – 19
EL8–48191–00	42 – 17
	43 – 17
704–48192–00	42 – 46
	43 – 46
704–48192–P0	42 – 55
	43 – 55
703–48198–00	40 – 16
	41 – 16
703–48205–22	39 – 1
	40 – 1
704–48205–R0	39 – 2
	42 – 1

PART NO. CODIGO Nº	REF. NO.
703–48207–22	39 – 1
	41 – 1
704–48207–R0	39 – 3
	43 – 1
703–48211–10	40 – 25
	41 – 25
703–48212–10	40 – 26
	41 – 26
703–48213–10	40 – 27
	41 – 27
6X4–48215–00	24 – 4
	48 – 3
703–48215–10	40 – 46
	41 – 46
704–48215–60	42 – 13
704–48215–70	43 – 13
703–48219–10	40 – 34
	41 – 34
704–48219–R0	42 – 52
	43 – 52
703–48221–10	40 – 28
	41 – 28
704–48221–R0	42 – 43
	43 – 43
704–48222–10	42 – 33
703–48222–20	40 – 31
	41 – 31
704–48222–20	43 – 62
704–48222–30	43 – 33
703–48223–10	40 – 32
	41 – 32
704–48224–00	42 – 49
	43 – 49
703–48225–10	40 – 33
	41 – 33
704–48225–R0	42 – 45
	43 – 45
703–48227–00	40 – 30
	41 – 30
704–48229–10	42 – 36
	43 – 36
704–48229–20	43 – 60
704–48231–00	42 – 26
	43 – 26
703–48232–00	40 – 2
	41 – 2
704–48232–P1	42 – 41
	43 – 41

PART NO. CODIGO Nº	REF. NO.
704–48233–00	42 – 56
	43 – 56
703–48234–00	40 – 20
	41 – 20
704–48234–00	42 – 51
	43 – 51
703–48235–00	40 – 5
	41 – 5
704–48235–00	42 – 57
	43 – 57
703–48236–00	40 – 18
	41 – 18
703–48238–00	40 – 24
	41 – 24
704–48238–00	42 – 40
	43 – 40
EL8–48241–00	42 – 27
	43 – 27
704–48242–10	42 – 44
	43 – 44
703–48243–00	40 – 17
	41 – 17
703–48244–00	40 – 23
	41 – 23
EL8–48244–00	42 – 31
	43 – 30
703–48245–00	40 – 13
	41 – 13
EL8–48245–00	42 – 32
	43 – 31
701–48246–00	42 – 5
	43 – 5
703–48246–00	40 – 29
	41 – 29
701–48248–00	40 – 15
	41 – 15
	42 – 39
	43 – 39
EL8–48251–00	42 – 3
	43 – 3
703–48252–00	40 – 14
	41 – 14
EL8–48254–00	42 – 28
	43 – 28
EL8–48259–00	42 – 7
	43 – 7
6X4–48261–00	24 – 27
	48 – 26

PART NO. CODIGO Nº	REF. NO.
704–48261–00	42 – 16
	43 – 16
703–48261–01	40 – 4
	41 – 4
704–48262–00	42 – 8
	43 – 8
703–48264–00	40 – 8
	41 – 8
704–48264–00	42 – 9
	43 – 9
704–48265–00	42 – 4
	43 – 4
703–48265–10	40 – 11
	41 – 11
703–48268–00	40 – 7
	41 – 7
703–48271–00	40 – 3
	41 – 3
704–48271–00	42 – 23
	43 – 23
6Y8–48277–00	52 – 16
EL8–48279–00	42 – 50
	43 – 50
703–48281–00	40 – 35
	41 – 35
704–48281–00	42 – 14
	43 – 14
EL8–48281–00	42 – 12
	43 – 12
704–48283–00	42 – 18
	43 – 18
703–48284–00	40 – 58
703–48284–10	41 – 58
704–48284–P0	42 – 60
	43 – 67
704–48285–20	43 – 68
701–48287–00	40 – 45
	41 – 45
704–48287–00	42 – 21
	43 – 21
703–48293–10	40 – 44
	41 – 44
701–48320–50	39 – 4
701–48320–60	39 – 4
701–48320–80	39 – 4
6EK–48321–00	24 – 33
	50 – 4
6E5–48344–00	27 – 6

NUMERICAL INDEX
INDICE NUMERICO

PART NO. CODIGO Nº	REF. NO.
6E5–48344–00	27 – 28
703–48345–01	40 – 21
	41 – 21
	42 – 20
	43 – 20
701–48350–00	39 – 4
701–48350–20	39 – 4
701–48350–30	39 – 4
703–48358–00	40 – 22
	41 – 22
	42 – 25
	43 – 25
688–48511–02	38 – 21
6EK–48531–01	27 – 1
6EK–48532–00	27 – 2
63D–48538–00	24 – 38
	24 – 44
	50 – 6
6EK–48538–00	27 – 4
6X4–48538–00	24 – 34
	48 – 32
6X4–48538–10	24 – 41
	48 – 35
6E5–61301–01	38 – 10
6E5–61303–00	38 – 14
6E5–61311–11	38 – 12
6E5–61313–00	38 – 11
6E5–61315–00	38 – 13
6EK–61350–00	38 – 1
6E5–61355–00	38 – 2
6C5–81145–00	7 – 2
6H5–81315–00	52 – 17
6EK–8132G–00	15 – 17
6EK–81337–00	15 – 11
6EK–81410–00	15 – 3
6EM–81800–00	21 – 1
69J–81801–10	21 – 5
6CB–81807–00	21 – 8
6CB–81809–00	21 – 14
67F–81810–00	21 – 3
67F–81813–00	21 – 6
6CB–81820–00	21 – 7
67F–81821–00	21 – 11
6EK–81822–01	18 – 4
6EK–81823–00	18 – 6
6CB–81826–00	21 – 22
69J–81828–00	21 – 23
6C5–8182L–00	7 – 3

PART NO. CODIGO Nº	REF. NO.
67F–81830–00	21 – 16
6CB–81832–00	21 – 9
6CB–81836–00	21 – 10
6C5–81839–00	21 – 19
67F–8183R–00	21 – 13
60V–8183T–00	21 – 17
6P2–8183X–00	17 – 5
69J–81840–10	21 – 4
67F–81841–00	21 – 12
6CB–81842–00	21 – 18
67F–81846–00	21 – 24
67F–81850–00	21 – 2
6X4–81860–00	25 – 21
	50 – 11
6C5–81869–00	21 – 21
67F–81891–00	21 – 15
6EK–81919–01	17 – 28
6Y8–81920–01	53 – 7
	54 – 1
6Y8–81920–11	53 – 9
60V–81925–00	18 – 2
6EM–81941–00	21 – 20
6EM–81942–00	17 – 15
6X4–81942–01	49 – 20
6EK–81948–00	16 – 6
68V–8194A–00	17 – 1
60E–81950–00	16 – 4
63P–81950–00	17 – 6
68V–81950–00	56 – 9
704–81950–10	43 – 59
6EK–81952–00	17 – 10
68V–81953–00	17 – 3
6EK–81960–02	19 – 11
6EK–81975–01	19 – 12
6K1–81980–00	47 – 18
6EE–81994–40	15 – 22
6EE–81994–50	15 – 23
6AH–81994–70	15 – 23
6AH–81996–00	22 – 31
68V–82105–01	18 – 9
6Y5–82117–00	44 – 8
	45 – 12
682–82119–01	17 – 7
6D8–82148–00	28 – 24
6E5–82148–00	28 – 3
66K–82149–00	28 – 8
68V–82149–30	28 – 8
1E6–82151–00	44 – 7

PART NO. CODIGO Nº	REF. NO.
1E6–82151–00	44 – 7
	45 – 5
1E6–82151–00	17 – 20
67F–82151–00	17 – 21
6G1–82151–00	53 – 14
67F–82151–10	17 – 22
6EK–82170–02	17 – 19
68F–82176–00	17 – 26
6EK–82181–00	31 – 5
68V–82310–01	19 – 1
68V–82310–11	19 – 2
6A0–82317–00	15 – 14
67F–82361–00	19 – 7
67F–82362–00	19 – 9
6EK–82388–00	19 – 4
6EK–82398–00	12 – 18
68V–82504–00	20 – 12
6Y8–82507–00	56 – 10
6Y8–82509–10	52 – 8
6R5–82510–03	46 – 4
6Y8–82510–03	56 – 3
6K1–82510–07	47 – 3
6X4–82510–41	25 – 1
	49 – 1
703–82510–44	40 – 48
	41 – 48
6Y8–82521–11	52 – 15
	53 – 11
6Y8–82521–51	53 – 12
	54 – 3
703–82531–00	40 – 51
	41 – 51
	45 – 13
6K1–82532–00	40 – 50
	41 – 50
	47 – 5
6YC–82532–00	53 – 5
703–82532–00	25 – 3
	46 – 6
	49 – 3
	56 – 5
6EK–8253C–00	16 – 2
6X4–82540–00	24 – 28
	48 – 27
703–82540–00	40 – 55
	41 – 55
704–82540–30	43 – 10
704–82540–40	42 – 10

PART NO. CODIGO Nº	REF. NO.
6DA–82553–00	20 – 18
6Y8–82553–31	53 – 10
682–82556–00	25 – 6
	40 – 53
	41 – 53
	46 – 8
	47 – 7
	49 – 6
	56 – 7
69J–82563–01	20 – 13
6X4–82563–01	25 – 8
	49 – 8
703–82563–21	41 – 57
703–82563–31	40 – 57
704–82563–60	42 – 35
704–82563–70	43 – 35
704–82563–80	43 – 61
704–82563–90	43 – 66
6Y8–82570–04	56 – 1
6R5–82570–07	46 – 1
6K1–82570–13	47 – 1
6Y8–82571–01	56 – 2
6K1–82571–02	47 – 2
704–82571–02	46 – 2
69W–82575–00	25 – 5
	49 – 5
6K1–82575–01	47 – 6
	56 – 6
688–82575–02	40 – 52
	41 – 52
	46 – 7
703–82577–00	40 – 49
	41 – 49
	47 – 4
676–82577–01	25 – 2
	46 – 5
	49 – 2
	56 – 4
60V–8257V–00	55 – 10
6C5–8257V–00	16 – 10
689–8257Y–00	25 – 7
	49 – 7
64D–82581–00	46 – 9
	56 – 11
68F–82582–00	18 – 3
6Y8–82582–01	54 – 4
6Y8–82582–11	20 – 2
	53 – 15

PART NO. CODIGO Nº	REF. NO.
6Y8–82582–11	54 – 5
6X4–82586–10	25 – 10
	50 – 9
69J–82587–00	20 – 14
6E5–82588–00	22 – 23
61A–82588–01	27 – 9
6R5–82588–01	46 – 3
61B–8258A–01	47 – 24
	56 – 20
688–8258A–20	40 – 54
	41 – 54
688–8258A–30	20 – 23
6K1–8258A–40	46 – 18
	47 – 23
	56 – 19
6EK–82590–00	20 – 1
704–82590–10	43 – 63
703–82591–00	40 – 59
	41 – 59
703–82592–00	40 – 60
	41 – 60
68V–82594–00	22 – 25
704–82594–00	42 – 34
	43 – 34
60V–8259F–00	27 – 27
68F–82846–00	17 – 23
6R5–83383–00	46 – 13
	56 – 8
6X4–83383–00	25 – 11
	49 – 10
	52 – 5
703–83383–11	40 – 56
	41 – 56
688–83383–12	47 – 12
6X4–83386–00	25 – 12
	49 – 11
	52 – 6
6Y5–8350F–B0	45 – 7
6Y5–8350T–E0	44 – 1
	45 – 1
6YC–83512–00	53 – 2
6Y5–83553–00	44 – 6
	45 – 4
6Y8–83553–01	53 – 13
6Y5–83553–F1	45 – 9
6Y5–83553–M0	44 – 6
6Y5–83557–10	44 – 10
6E5–83558–00	23 – 16

PART NO. CODIGO Nº	REF. NO.
6E5–83558–10	34 – 12
	36 – 14
6Y8–8356N–01	53 – 6
6Y5–83570–A0	44 – 4
6H4–83589–00	25 – 19
	49 – 18
69J–83614–00	20 – 15
6K1–83614–01	47 – 8
6EK–83626–00	15 – 20
6X4–83653–20	25 – 14
	49 – 13
6Y5–83653–30	44 – 9
6Y5–83653–40	45 – 6
60V–83667–00	55 – 5
6AW–8366B–01	55 – 2
60V–8366D–00	55 – 3
	55 – 14
67H–83672–01	29 – 1
68F–83688–10	7 – 7
6YC–83710–01	53 – 1
6C5–84301–00	25 – 15
	49 – 14
6Y8–84383–00	44 – 3
	44 – 5
	45 – 3
	45 – 8
6Y8–8454G–00	52 – 11
68F–85119–00	16 – 9
6Y8–85371–01	53 – 8
	54 – 2
6X4–85415–00	25 – 20
	49 – 19
64J–85516–00	17 – 11
68F–85516–01	16 – 7
6EM–85544–00	17 – 25
689–85547–00	13 – 1
68V–85548–01	16 – 12
6EK–85561–00	15 – 5
6CB–85580–00	15 – 4
6Y5–85752–02	45 – 10
6CJ–85780–00	20 – 17
6CJ–85790–00	20 – 10
6K1–85830–02	47 – 13
6C5–85885–00	7 – 4
6EK–8591A–01	16 – 1
6EK–8591A–11	16 – 1
6C5–86120–00	8 – 1
6Y8–86260–12	52 – 2

NUMERICAL INDEX
INDICE NUMERICO

PART NO. CODIGO Nº	REF. NO.
6AA–86261–22	52 – 3
6Y8–86267–00	52 – 1
6YC–87278–00	53 – 3
60V–8A4L2–04	55 – 1
K1C–A3275–00	4 – 10
7BB–G3861–00	30 – 17
6EK–W0001–00	57 – 1
6EK–W0001–20	58 – 1
68V–W0078–00	1 – 19
	58 – 20
6EK–W009A–00–9S	5 – 1
6EK–W009B–02–9S	3 – 1
6EK–W1165–00	4 – 9
6EK–W4624–00	6 – 16
6EK–W8145–01	15 – 1
6EK–W9010–00	15 – 2
90101–09M70	38 – 18
90101–12014	24 – 56
	48 – 48
90101–12047	28 – 40
90101–12M03	28 – 40
90101–12M05	28 – 40
	28 – 40
90105–06037	3 – 10
	5 – 24
90105–06039	2 – 6
90105–06151	3 – 32
	33 – 15
90105–06208	13 – 30
90105–06M07	5 – 18
90105–06M08	8 – 8
90105–06M14	18 – 10
90105–08170	3 – 6
90105–08186	7 – 6
90105–08220	12 – 15
90105–08247	12 – 14
90105–08248	18 – 8
90105–08M87	8 – 12
90105–10M00	35 – 15
	37 – 15
90105–14007	29 – 25
90105–14013	29 – 18
90109–06286	3 – 20
90109–06288	27 – 33
	27 – 36
90109–06292	33 – 8
90109–06M81	22 – 24
	27 – 3

PART NO. CODIGO Nº	REF. NO.
90109–06M81	55 – 13
	55 – 15
90109–06M86	20 – 16
	22 – 15
	22 – 20
90109–08240	18 – 5
90111–05037	7 – 8
90111–08078	2 – 7
90116–10063	29 – 29
	38 – 22
	50 – 1
90119–06M09	19 – 10
90119–06M10	34 – 16
	36 – 18
90119–06M17	8 – 19
90119–06M24	8 – 9
90119–06M56	17 – 13
90119–06M81	28 – 36
90119–07234	5 – 8
90119–07235	5 – 6
90119–08022	7 – 11
90119–08M14	34 – 32
	36 – 34
	58 – 28
90119–08M22	22 – 2
90119–08M74	26 – 2
	51 – 2
90119–10007	32 – 13
90119–10050	6 – 14
90119–10054	28 – 34
90119–10057	3 – 5
90119–10058	29 – 22
90119–10M89	35 – 7
	37 – 7
90149–05M05	46 – 14
	47 – 19
	56 – 15
90151–06M02	3 – 16
90152–05007	24 – 10
	48 – 9
90152–05M07	35 – 12
	37 – 12
90155–10008	5 – 23
90158–06003	45 – 11
90159–05059	29 – 4
90159–06053	23 – 22
90159–06M28	23 – 20
90167–06M00	52 – 12

PART NO. CODIGO Nº	REF. NO.
90169–05M00	17 – 16
90170–09M03	38 – 3
90170–09M03	38 – 19
90170–14M06	38 – 15
90170–16M01	34 – 43
	36 – 45
90171–18M04	35 – 22
	37 – 22
90176–14002	29 – 19
	29 – 28
90179–08003	18 – 1
90183–061A8	23 – 21
90185–05002	35 – 13
	37 – 13
90185–08057	26 – 13
	51 – 13
90185–09M01	38 – 5
	38 – 20
90185–10027	29 – 30
	38 – 23
	50 – 2
90185–10M14	26 – 9
	51 – 9
90185–12M12	24 – 63
	48 – 55
90185–22M11	28 – 12
90201–06M05	27 – 32
	27 – 37
90201–06M30	52 – 13
90201–08M01	26 – 3
	51 – 3
90201–10060	28 – 33
90201–10M20	38 – 6
90201–10M63	38 – 9
90201–10M76	26 – 10
	38 – 17
	51 – 10
90201–11008	27 – 20
90201–12035	24 – 60
	48 – 52
90201–12426	28 – 42
90201–13M01	28 – 41
90201–156J2	22 – 8
90201–16M55	29 – 17
90201–186F1	5 – 5
	12 – 3
	57 – 17
90201–22M01	34 – 20

PART NO. CODIGO Nº	REF. NO.
90201–22M01	36 – 22
90201–26M00	36 – 48
90201–26M59	28 – 11
90201–30M92	34 – 63
90201–38M60	29 – 8
90202–08M20	27 – 13
90202–32M19	29 – 16
90202–40M47	29 – 11
90206–12M22	24 – 58
	48 – 50
90206–15M18	22 – 9
90206–22M19	34 – 21
	36 – 23
90249–06M19	28 – 20
90250–08M07	34 – 52
	36 – 55
90280–04M05	34 – 28
	36 – 30
	58 – 29
90282–04010	34 – 64
	36 – 68
90338–08174	29 – 7
90340–08002	34 – 6
	36 – 8
90340–14M06	5 – 9
	33 – 3
90340–18M09	5 – 4
	12 – 2
90383–20001	28 – 32
90386–06M12	27 – 16
90386–08032	24 – 16
	48 – 15
90386–10001	27 – 19
	27 – 43
90386–10M16	28 – 17
90386–12003	24 – 61
	48 – 53
90386–15M73	22 – 7
90386–18001	28 – 29
90386–18M35	28 – 28
90386–25M31	28 – 10
90386–26MA3	24 – 51
	48 – 43
90386–38M32	29 – 10
90387–06119	15 – 13
90387–06176	16 – 8
90387–06289	8 – 18
90387–06M43	23 – 24

PART NO. CODIGO Nº	REF. NO.
90387–07046	2 – 3
90387–08M37	22 – 4
90387–08M45	2 – 10
90387–10094	2 – 8
90387–10M42	38 – 4
90387–12M02	24 – 59
	48 – 51
90401–20007	3 – 29
90430–06M03	5 – 19
90430–08003	1 – 17
	34 – 8
	36 – 10
	58 – 10
90430–08143	32 – 3
	58 – 5
90430–14115	5 – 10
	20 – 11
	55 – 6
	57 – 24
90430–14M09	1 – 16
	33 – 4
	58 – 2
90440–16001	35 – 2
90440–16002	35 – 2
	37 – 2
90445–07017	55 – 17
90445–07018	55 – 7
90445–073F9	23 – 14
90445–07ME8	34 – 11
90445–07ME9	34 – 11
	36 – 13
90445–13M01	14 – 3
90445–13M06	14 – 6
90447–07013	55 – 18
90447–07015	55 – 8
90464–06001	19 – 5
90464–07209	8 – 20
90464–07259	23 – 15
90464–07M41	19 – 8
90464–08M07	25 – 4
	49 – 4
90464–09021	55 – 12
90464–09129	12 – 20
90464–09M42	24 – 36
	50 – 8
90464–10M57	9 – 13
90464–11012	9 – 7
90464–12006	9 – 4

PART NO. CODIGO Nº	REF. NO.
90464–12009	11 – 6
90464–12010	9 – 26
90464–12012	11 – 8
90464–12183	12 – 21
90464–12224	11 – 7
90464–13227	19 – 6
	20 – 4
90464–13249	15 – 10
90464–16001	9 – 18
	20 – 7
	20 – 21
90464–18004	20 – 5
	20 – 22
90464–20258	22 – 27
90464–21002	7 – 32
90464–22005	20 – 6
90464–26001	20 – 19
90464–99004	7 – 20
90465–08M63	28 – 7
90465–11M10	3 – 25
	9 – 10
	9 – 12
	9 – 15
	9 – 17
	11 – 4
	12 – 17
	13 – 11
	13 – 29
	23 – 2
	23 – 12
	23 – 17
	28 – 14
	29 – 5
	35 – 16
	37 – 16
	44 – 11
	52 – 10
	55 – 9
	55 – 16
90465–11M59	3 – 22
	33 – 19
90465–13M18	17 – 17
	17 – 18
	20 – 20
	28 – 26
90465–13M24	25 – 22
	50 – 10
90465–13M30	22 – 18

NUMERICAL INDEX
INDICE NUMERICO

PART NO. CODIGO Nº	REF. NO.
90465–13M97	15 – 7
90467–120A7	11 – 5
90468–10005	24 – 39
	24 – 45
	50 – 5
90468–18008	27 – 7
	27 – 14
	27 – 29
90468–180A0	27 – 21
90480–06M19	7 – 31
	15 – 19
90480–10M23	8 – 17
90480–12314	5 – 31
	15 – 16
90480–13M24	23 – 23
90480–20M05	32 – 21
90480–22M15	22 – 3
90501–12082	27 – 25
90501–16M37	34 – 48
	36 – 51
90501–200A2	32 – 20
90501–23215	24 – 14
	48 – 13
90506–14M24	28 – 23
90506–22001	22 – 13
91312–06035	15 – 9
91318–03005	30 – 61
91318–03025	30 – 60
91318–05030	30 – 53
91318–05045	30 – 34
91380–06025	30 – 67
91490–20010	24 – 11
	24 – 20
	48 – 10
	48 – 19
91490–40030	35 – 23
	37 – 23
91609–16012	30 – 12
91690–30010	27 – 5
91690–30018	27 – 44
91690–30020	28 – 19
91690–50014	7 – 15
	12 – 11
91809–08006	5 – 7
92780–06020	42 – 29
	43 – 29
92903–05100	46 – 11
	46 – 16

PART NO. CODIGO Nº	REF. NO.
92903–05100	56 – 13
92903–05600	46 – 17
92903–08100	18 – 12
92990–05100	47 – 10
	47 – 21
	56 – 17
92990–05300	42 – 37
	43 – 37
92990–05600	47 – 22
	56 – 18
92990–06100	47 – 16
92990–06300	42 – 48
	43 – 48
92990–06600	47 – 17
92990–08600	2 – 9
	40 – 38
	41 – 38
92990–12200	24 – 57
	48 – 49
92990–12600	24 – 62
	48 – 54
92990–18200	35 – 21
	37 – 21
92995–14600	29 – 20
	29 – 27
93101–28M16	34 – 34
	36 – 36
	58 – 16
93101–30M17	34 – 60
	36 – 65
	58 – 18
93102–38008	6 – 15
	57 – 10
93102–85008	4 – 4
	57 – 9
93106–09014	34 – 15
	36 – 17
	58 – 12
93210–04279	52 – 9
93210–04N51	30 – 43
93210–064A5	30 – 44
93210–09165	27 – 18
	30 – 25
93210–13M63	3 – 14
	5 – 14
	12 – 8
	22 – 10
	32 – 31

PART NO. CODIGO Nº	REF. NO.
93210–13M63	57 – 2
	57 – 7
	57 – 18
	58 – 9
93210–16275	38 – 8
93210–19MJ1	3 – 7
	33 – 16
	57 – 5
	57 – 14
93210–24M79	5 – 35
	57 – 16
93210–30682	13 – 28
	57 – 23
93210–33003	7 – 26
93210–37160	34 – 26
	36 – 28
	58 – 14
	58 – 23
93210–37MH7	29 – 9
93210–554A9	31 – 12
93210–55M14	34 – 38
	36 – 40
	58 – 17
93210–58144	34 – 14
	36 – 16
	58 – 11
93210–64001	12 – 9
	57 – 19
93210–68N50	30 – 27
93210–84001	12 – 10
	57 – 20
93210–86M38	34 – 25
	36 – 27
	58 – 13
	58 – 22
93210–86M39	34 – 61
	36 – 66
	58 – 19
93306–208U0	34 – 56
93315–345W0	36 – 4
93315–425U7	34 – 45
	36 – 47
93315–43061	36 – 64
93315–430U8	34 – 59
93315–628U9	34 – 3
	36 – 3
93317–330U2	34 – 35
	36 – 37

PART NO. CODIGO Nº	REF. NO.
93332–000U7	34 – 4
93332–000V7	36 – 59
93341–360U8	36 – 5
93341–440U5	36 – 62
93341–930V2	34 – 37
	36 – 39
93410–18M05	28 – 30
93410–37M04	29 – 13
93430–06024	40 – 12
	41 – 12
	42 – 6
	43 – 6
93450–19052	4 – 14
93501–04M02	27 – 24
93501–08001	30 – 47
93503–16003	30 – 16
	34 – 51
	36 – 54
93505–32038	30 – 13
	30 – 40
93507–32009	34 – 49
	36 – 52
93511–32017	34 – 50
	36 – 53
93604–26256	30 – 54
93605–10108	6 – 11
93606–12019	3 – 4
	4 – 3
	32 – 8
	32 – 16
	33 – 5
	34 – 31
	36 – 33
	58 – 27
93606–19M23	3 – 3
93608–12M05	32 – 5
	35 – 5
	37 – 5
93700–06M03	24 – 3
	28 – 6
	48 – 2
94702–00437	1 – 8
	5 – 36
95303–05600	46 – 15
95303–05700	46 – 12
	56 – 14
95333–08600	18 – 11
95380–05600	40 – 9

PART NO. CODIGO Nº	REF. NO.
95380–05600	41 – 9
	42 – 22
	43 – 22
	47 – 11
	47 – 20
	56 – 16
95380–06600	8 – 2
	23 – 19
	24 – 19
	40 – 43
	41 – 43
	42 – 38
	43 – 38
	47 – 15
	48 – 18
95380–12600	28 – 43
95380–14700	38 – 16
95780–06300	52 – 14
95780–08300	2 – 11
95812–08030	18 – 7
95875–06025	7 – 10
	7 – 21
95875–06040	27 – 11
95875–08040	5 – 20
95875–08060	7 – 5
95875–10060	29 – 24
95895–06010	16 – 3
	28 – 39
95895–06012	12 – 19
95895–06014	8 – 16
95895–06016	7 – 30
	13 – 14
	15 – 18
	17 – 14
95895–06025	32 – 24
	55 – 4
95895–06030	5 – 29
	15 – 8
	15 – 15
	27 – 23
	27 – 41
	32 – 7
95895–08012	22 – 12
95895–08020	5 – 33
97003–05012	56 – 12
97095–06010	28 – 22
97095–06014	24 – 37
	24 – 43

PART NO. CODIGO Nº	REF. NO.
97095–06014	25 – 13
	48 – 34
	48 – 37
	49 – 12
97095–08014	32 – 2
97303–05012	46 – 10
97380–05025	40 – 10
	41 – 10
97380–06018	42 – 19
	43 – 19
97380–08030	40 – 37
	41 – 37
97575–08535	32 – 12
97575–10545	32 – 4
	32 – 14
	32 – 15
	33 – 2
97595–05516	15 – 6
97595–06510	28 – 25
97595–06516	20 – 8
	20 – 9
	55 – 11
	55 – 20
97595–06520	17 – 9
97595–06525	19 – 3
97595–06530	19 – 13
	24 – 32
	48 – 31
97595–06610	17 – 4
	17 – 8
97595–06616	28 – 38
97595–08520	28 – 13
97595–08525	26 – 12
	34 – 40
	36 – 42
	51 – 12
97595–08540	24 – 31
	48 – 30
97595–10545	35 – 6
	37 – 6
97602–04316	31 – 9
97607–04208	5 – 27
97780–50620	17 – 24
97780–60520	23 – 6
97780–60620	16 – 5
	16 – 11
	16 – 13
	17 – 2

PART NO. CODIGO Nº	REF. NO.
97780–60620	25 – 17
	49 – 16
	52 – 7
97780–60920	24 – 49
	48 – 41
97880–06012	28 – 4
97880–06035	52 – 12
97890–05016	42 – 63
	43 – 73
97890–05025	42 – 15
	43 – 15
97890–06018	42 – 47
	43 – 47
97980–05214	7 – 23
97980–06216	25 – 9
	49 – 9
	52 – 4
97985–04116	27 – 10
97985–04308	20 – 3
97985–06216	24 – 53
	29 – 2
	48 – 45
98507–04008	10 – 30
98580–04006	40 – 40
	41 – 40
98780–05018	42 – 30
	43 – 32
98780–05025	12 – 5
98980–05010	47 – 9
98980–05025	3 – 12
	5 – 12
	32 – 29
98980–06020	47 – 14
99001–08600	34 – 18
	36 – 20
99002–03600	30 – 57
99009–47500	30 – 24
99530–14016	5 – 22
99590–10114	8 – 11
9E450–04533	44 – 2
	45 – 2