YAMAHA

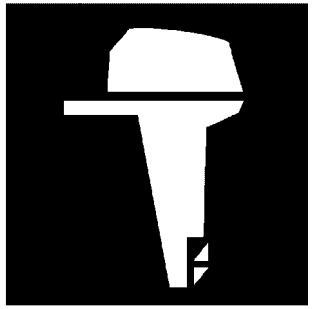

PARTS CATALOGUE
CATALOGO DE REPUESTOS

F250HET'17 (6FJ1)
FL250HET'17 (6FK1)

1R6FJ-200SA

( )

YAMAHA GENUINE Parts & Accessories

2020/11/2

NEWS NO.	DATE	COMMENT
PE0-OM-180008	Feb.,19,2018	MOD:FIG.39, 40 LIST REVISION
PE0-OM-200017	Nov.,2,2020	MOD:F(L)250HET(6FJ*/6FK*) CYLINDER&CRANKCASE 1 LIST REVISION

F250HET/FL250HET
PARTS CATALOGUE
©2017 by Yamaha Motor Co., Ltd.
1st edition, February 2017
All rights reserved.
Any reprinting or unauthorized use
without the written permission of
Yamaha Motor Co., Ltd.
is expressly prohibited.
Printed in Japan.

F250HET/FL250HET
CATALOGO DE REPUESTOS
©2017 por Yamaha Motor Co., Ltd.
1ª edición, febrero 2017
Todos los derechos reservados.
Toda reproducción o uso no autorizado
sin el consentimiento escrito de
Yamaha Motor Co., Ltd.
quedan expresamente prohibidos
Impreso en Japón.

FOREWORD

This Parts Catalogue is related to the parts for the model(s) on the cover page. When you are ordering replacement parts, please refer to this Parts Catalogue and quote both part numbers and part names correctly.

1. Modifications or additions which have been made after the issue of the Parts Catalogue will be announced in the Parts News.
   It is advisable that you make the necessary corrections to the Parts Catalogue according to the Parts News.

2. Abbreviations
   The following abbreviations are used in this Parts Catalogue.
   "UR" Use specified parts number.
   "UN" Use as many as needed.
   "AP" Alternate Parts
   "LM" Locally Made (Parts need to be ordered locally)
   "F#" Frame No. (Applicable machine No.)
   "O/S" Over Size

3. The number of components for assembly
   - Parts, which are to be supplied in an assembly, are listed with a dot (.) in front of the part name as shown below.
   - The numeral appearing to the right of each component part indicates the quantity of parts for each assembly unit.

PART NO.	DESCRIPTION	Q'TY	REMARKS
2F5–83310–60	FRONT FLASHER LIGHT ASSY	2	
115–83311–60	.BULB (6V–18W)	1	

4. Applicable colours of graphics are represented in the "REMARKS" as shown below.

PART NO.	DESCRIPTION	Q'TY	REMARKS
2N4–24110–00–X5	FUEL TANK COMP.	2	MXR
3J1–24240–10	.GRAPHIC, FUEL TANK	1	FOR MXR

5. Note that the illustrations for reference in finding parts numbers are not to be used for assembling. When assembling, please use the applicable service manual.

6. The asterisk (*) before a reference number indicates modified items after the first edition.

7. Applicable Serial No.
   Engine Serial No.

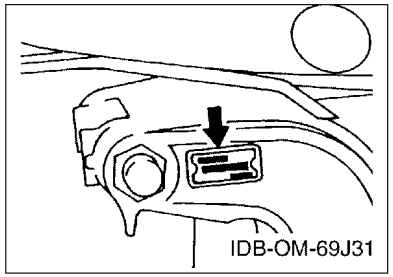

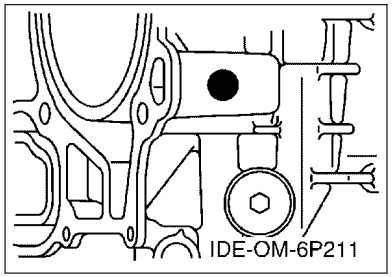

8. Applicable Engine Starting Serial No.

Model	Serial No.	Model	Serial No.
F250H	6DX-1006670	FL250H	6DY-1002830

9. Applicable Colour Code

Abbreviation	Colour Name	Colour Code
DBN1	DARK BLUISH GRAY 1	008D

10. Quantity Column Information

Column No.	Name Of Q'ty Column	Applicable Model
1	6FJ1	F250HET
2	6FK1	FL250HET

PROLOGO

Este catálogo de repuestos corresponde a las piezas para el o los modelos que figuran en la página de portada. Al formular el pedido de repuestos, se ruega citar este catálogo y especificar correctamente el número y el nombre de las piezas.

1. Las modificaciones y agregados que se hayan realizado después de la edición de este Catálogo de Repuestos, serán anunciados en las Informaciones de Recambios.
   Es recomendable que se hagan las correcciones necesarias en el Catálogo de Repuestos de acuerdo con las Informaciones de Recambios.

2. Abreviaciones
   En este. Catálogo de Repuestos se emplean las siguientes abreviaciones.
   "UR" Usar el número de partes especificado
   "UN" Usar la cantidad necesaria
   "AP" Piezas sustitutivas
   "LM" Fabricación local (Hay que pedir los repuestos en las cercanías)
   "F#" Nº de bastidor (Nº aplicable a la máquina)
   "O/S" Sobredimensionado

3. La cantidad de componentes para el montaje
   - Los componentes, suministrados como conjunto, se describen con un punto (.) que precede al nombre del parte como se indica a continuación.
   - La numeración que aparece a la derecha de cada descripción indica la cantidad de partes por cada unidad de conjunto.

CODIGO Nº	DESCRIPCION	CANT.	OBSERVACIONES
2F5–83310–60	ENSAMBLAJE DE LA LUZ	2	
115–83311–60	.BOMBILLA (6V–18W)	1	

4. Los colores de los componentes se indican como sigue en la columna de "OBSERVACIONES".

CODIGO Nº	DESCRIPCION	CANT.	OBSERVACIONES
2N4–24110–00–X5	COMP. DEL TANQUE	2	MXR
3J1–24240–10	.GRAFICO, DEL TANQUE	1	PARA MXR

5. Debe tenerse en cuenta que las ilustraciones sirven como guia para la búsqueda de los números de partes y no deben usarse para el montaje. Durante el montaje, se recomienda usar el manual de taller correspondiente.

6. EL asterisco (*) antes del número de referencia indica los elementos modificados después de la primera edición.

7. Números de serie
   Nº de Serie del motor

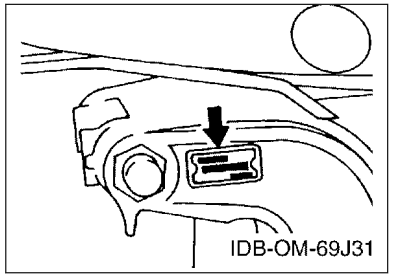

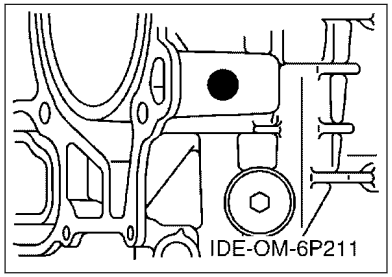

8. Números de serie del motor

Modelo	Nº de serie	Modelo	Nº de serie
F250H	6DX-1006670	FL250H	6DY-1002830

9. Códigos de color aplicables

Abreviatura	Nombre de color	Código de color
DBN1	DARK BLUISH GRAY 1	008D

10. Informacion para la columna de cantidades

Columna Nº	Nombre de la columna de cantidades	Modelo aplicable
1	6FJ1	F250HET
2	6FK1	FL250HET

CONTENTS

SCHEDULED SERVICE PARTS....1
TOP COWLING....2
CYLINDER & CRANKCASE 1....3
CRANKSHAFT & PISTON....6
CYLINDER & CRANKCASE 2....7
CYLINDER & CRANKCASE 3....9
VALVE....10
INTAKE 1....13
INTAKE 2....15
THROTTLE BODY ASSY 1....17
THROTTLE BODY ASSY 2....18
THROTTLE BODY ASSY 3....19
FUEL INJECTION PUMP 1....20
FUEL INJECTION PUMP 2....22
FUEL 1....23
FUEL 2....24
GENERATOR....25
ELECTRICAL 1....26
ELECTRICAL 2....28
ELECTRICAL 3....30
STARTING MOTOR....31
BOTTOM COWLING 1....33
BOTTOM COWLING 2....36
CONTROL....37
BRACKET 1....39
BRACKET 2....41
POWER TRIM & TILT ASSY 1....43
POWER TRIM & TILT ASSY 2....46
UPPER CASING....47
OIL PAN....50
LOWER CASING & DRIVE 1....51
LOWER CASING & DRIVE 2....55
LOWER CASING & DRIVE 3....57
LOWER CASING & DRIVE 4....61
STEERING GUIDE ATTACHMENT 1....63
STEERING GUIDE ATTACHMENT 2....64
REMOTE CONTROL BOX....65
REMOTE CONTROL ASSY 1....66
REMOTE CONTROL ASSY 2....69
REMOTE CONTROL ASSY 3....72
SWITCH & PANEL....75
OPTIONAL PARTS 1....76
OPTIONAL PARTS 2....77
OPTIONAL PARTS 3....78
OPTIONAL PARTS 4....79
OPTIONAL PARTS 5....80
OPTIONAL PARTS 6....81
OPTIONAL PARTS 7....82
REPAIR KIT 1....83
REPAIR KIT 2....84

INDEX

NUMERICAL INDEX....86

CONTENIDO

PARTES DE REPUESTO TEMPORALES..... 1
SOPORTE SUPERIOR..... 2
CILINDRO & CARTER 1..... 3
CIGUENAL & PISTON.....6
CILINDRO & CARTER 2..... 7
CILINDRO & CARTER 3..... 9
VALVULA.....10
ADMISION 1.....13
ADMISION 2.....15
CAJA DE ACELERADOR COMPL 1.....17
CAJA DE ACELERADOR COMPL 2.....18
CAJA DE ACELERADOR COMPL 3.....19
BOMBA DE INYECTOR 1.....20
BOMBA DE INYECTOR 2.....22
COMBUSTIBLE 1.....23
COMBUSTIBLE 2.....24
GENERADOR.....25
EQUIPO ELECTRICO 1..... 26
EQUIPO ELECTRICO 2..... 28
EQUIPO ELECTRICO 3..... 30
MOTOR DE ARRANQUE.....31
CUBIERTA INFERIOR 1..... 33
CUBIERTA INFERIOR 2..... 36
CONTROL..... 37
SOPORTE 1..... 39
SOPORTE 2..... 41
COMPONER Y PODER VARILLA 1.....43
COMPONER Y PODER VARILLA 2.....46
FUNDA SUPERIOR.....47
OIL PAN.....50
IMPULSOR E INFERIOR 1..... 51
IMPULSOR E INFERIOR 2..... 55
IMPULSOR E INFERIOR 3..... 57
IMPULSOR E INFERIOR 4..... 61
ADITAMENTO GUIA DE GOBIERNO 1.....63
ADITAMENTO GUIA DE GOBIERNO 2.....64
CONTROL REMOTO COMPLETO..... 65
CONTROL REMOTO COMPL 1.....66
CONTROL REMOTO COMPL 2.....69
CONTROL REMOTO COMPL 3.....72
PANEL DE INTERRUPTOR.....75
PARTES OPCIONALES 1.....76
PARTES OPCIONALES 2.....77
PARTES OPCIONALES 3.....78
PARTES OPCIONALES 4.....79
PARTES OPCIONLES 5..... 80
PARTES OPCIONALES 6.....81
PARTES OPCIONALES 7.....82
ESTUCHE REPARATION 1..... 83
ESTUCHE REPARATION 2..... 84

INDICE

INDICE NUMERICO.....86

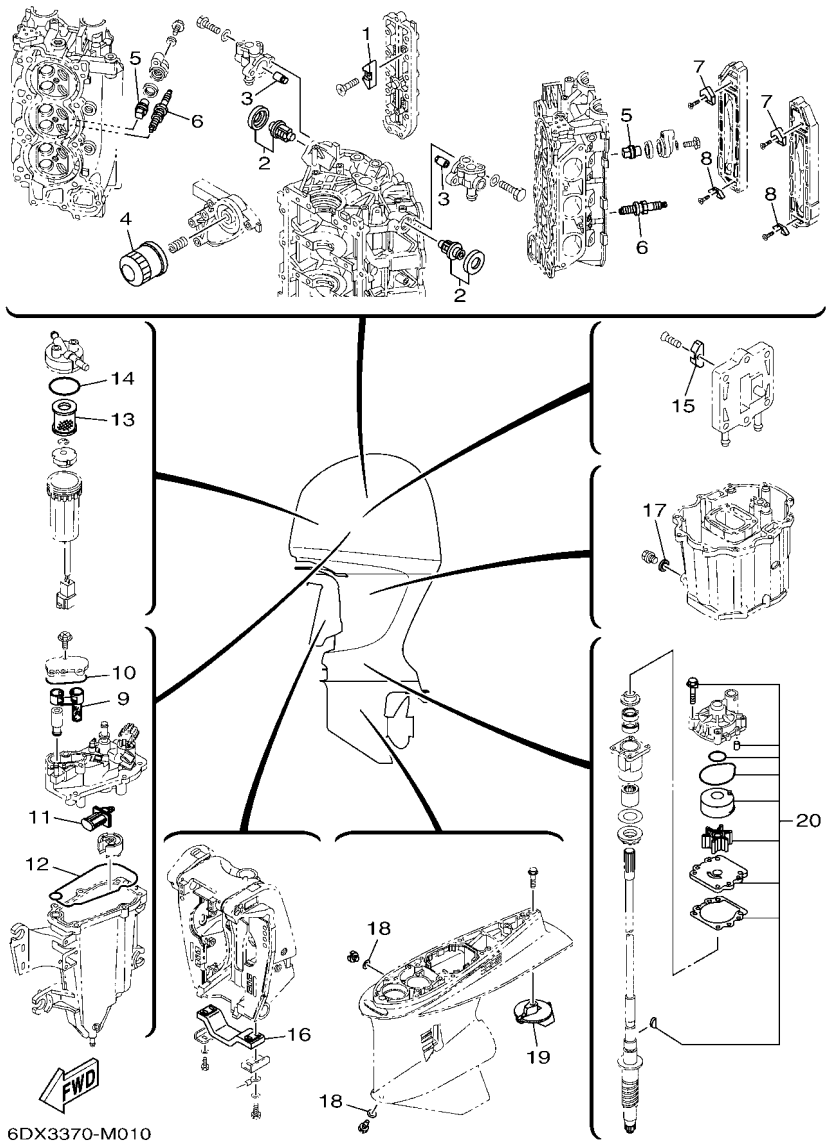

FIG. 1 SCHEDULED SERVICE PARTS — PARTES DE REPUESTO TEMPORALES

REF. NO.	PART NO. CODIGO Nº	DESCRIPTION DESCRIPCION	6FJ1	6FK1				REMARKS OBSERVACIONES
1	6E5–11325–00	ANODE ANODO	4	4				
2	67F–12411–01	THERMOSTAT TERMOSTAT	2	2				
3	6P3–11325–00	ANODE ANODO	2	2				
4	69J–13440–03	ELEMENT ASSY, OIL CLEANER ELEMENTO FILTRO DE ACEITE	1	1				
5	67F–11325–01	ANODE ANODO	4	4				
6	94702–00400	PLUG, SPARK (NGK LFR6A-11) BUJIA (NGK LFR6A-11)	6	6				
7	6P2–11325–00	ANODE ANODO	2	2				
8	6E5–11325–00	ANODE ANODO	2	2				
9	6CB–24501–01	FILTER, FUEL FIELTRO	1	1				
10	6CB–13016–00	O-RING ANILLO O	1	1				
11	63P–13915–00	FILTER FILTRO	1	1				
12	6CB–14984–00	GASKET, FLOAT CHAMBER EMPAQUE CAMARA DE BOIA	1	1				
13	6P3–24563–01	ELEMENT, FILTER ELEMENTO DEL FILTRO	1	1				
14	6P3–24564–00	GASKET EMPAQUE	1	1				
15	6E5–11325–00	ANODE ANODO	1	1				
16	6G5–45251–02	ANODE CATODE	1	1				
17	90430–14M09	GASKET JUNTA	1	1				
18	90430–08003	GASKET JUNTA	2	2				
19	61A–45371–00	TAB-TRIM QUILLA ESTABILIZADOR	1	1				
20	6S1–W0078–00	WATER PUMP REPAIR KIT ESTUCHE REPARACION BOMBA AGUA	1	1				

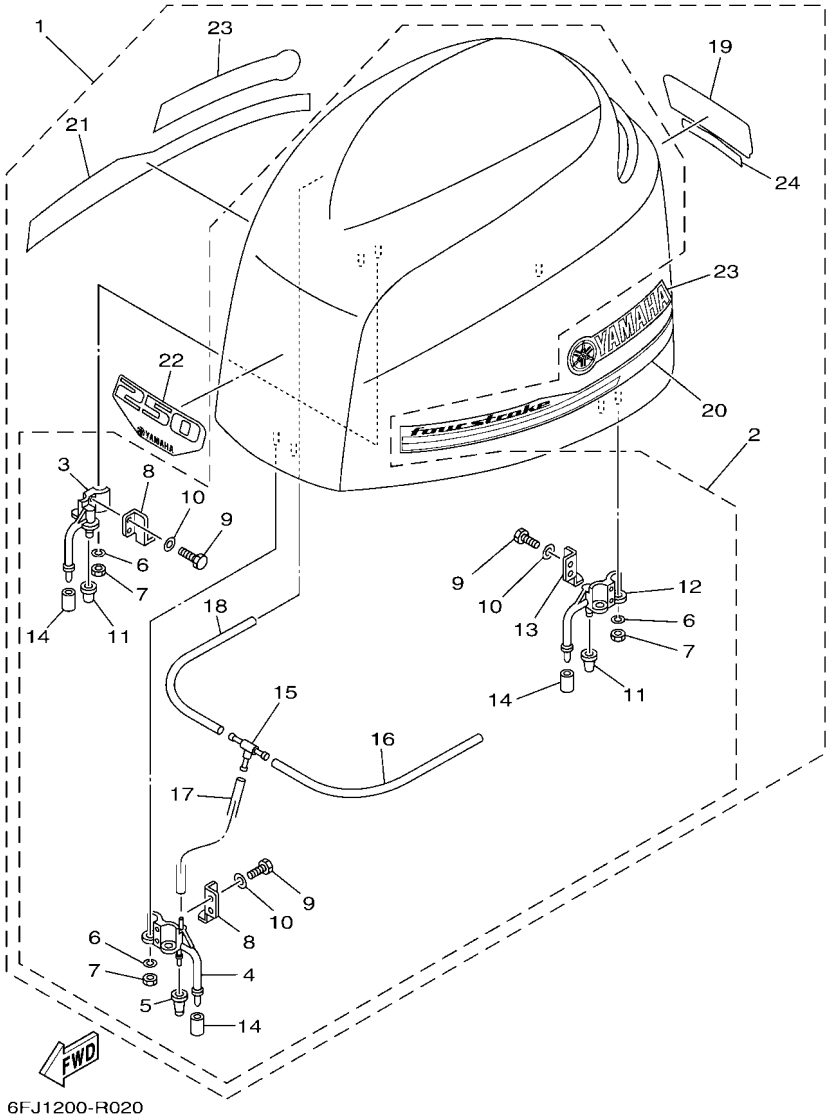

FIG. 2 TOP COWLING — SOPORTE SUPERIOR

REF. NO.	PART NO. CODIGO Nº	DESCRIPTION DESCRIPCION	6FJ1	6FK1				REMARKS OBSERVACIONES
1	6FJ–42610–00	TOP COWLING ASSY SOPORTE SUPERIOR COMPL.	1	1				
2	6P2–4261A–00	.TOP COWLING W/O GRAPHICS .SOPORTE SUPERIOR SIN GRAFICOS	1	1				
3	68F–42647–01	..HOLDER, CLAMP BAND ..MORDAZA DE ABRAZADERA	1	1				
4	69J–42647–01	..HOLDER, CLAMP BAND ..MORDAZA DE ABRAZADERA	1	1				
5	69J–42663–00	..DAMPER 2 ..AMORTIGUADOR 2	1	1				
6	92990–06100	..WASHER, SPRING ..ARANDELA PLANA	6	6				
7	95380–06600	..NUT, HEXAGON ..TUERCA	6	6				
8	60V–42651–01	..HOOK ..GANCHO	2	2				
9	97095–06016	..BOLT ..PERNO	6	6				
10	92995–06600	..WASHER ..ARANDELA	6	6				
11	68F–42663–00	..DAMPER 2 ..AMORTIGUADOR 2	2	2				
12	68F–42648–01	..HOLDER, CLAMP BAND ..MORDAZA DE ABRAZADERA	1	1				
13	60V–42652–00	..HOOK ..GANCHO	1	1				
14	67F–13448–00	..CAP ..TAPA	3	3				
15	69J–24378–00	..PIPE, JOINT 3 ..TUBO DE UNION 3	1	1				
16	90445–11M27	..HOSE (L240) ..TUBO (L240)	1	1				
17	90445–11699	..HOSE (L500) ..TUBO (L500)	1	1				
18	90445–11182	..HOSE (L300) ..TUBO (L300)	1	1				
19	6FJ–42678–00	.GRAPHIC, REAR .CALCAMONIA TRASERA	1	1				
20	6S1–42675–00	.GRAPHIC, SIDE 1 .CALCAMONIA LATERAL 1	1	1				
21	6S1–42676–00	.GRAPHIC, SIDE 2 .CALCAMONIA LATERAL 2	1	1				
22	6FJ–42677–00	.GRAPHIC, FRONT .CALCAMONIA FRONTAL	1	1				
23	6S1–42681–00	.MARK, COWLING .MARCA DE CUBIERTA	2	2				
24	6S1–4267A–00	.GRAPHIC, REAR 2 .CALCAMONIA TRASERA 2	1	1				

FIG. 3 CYLINDER & CRANKCASE 1 — CILINDRO & CARTER 1

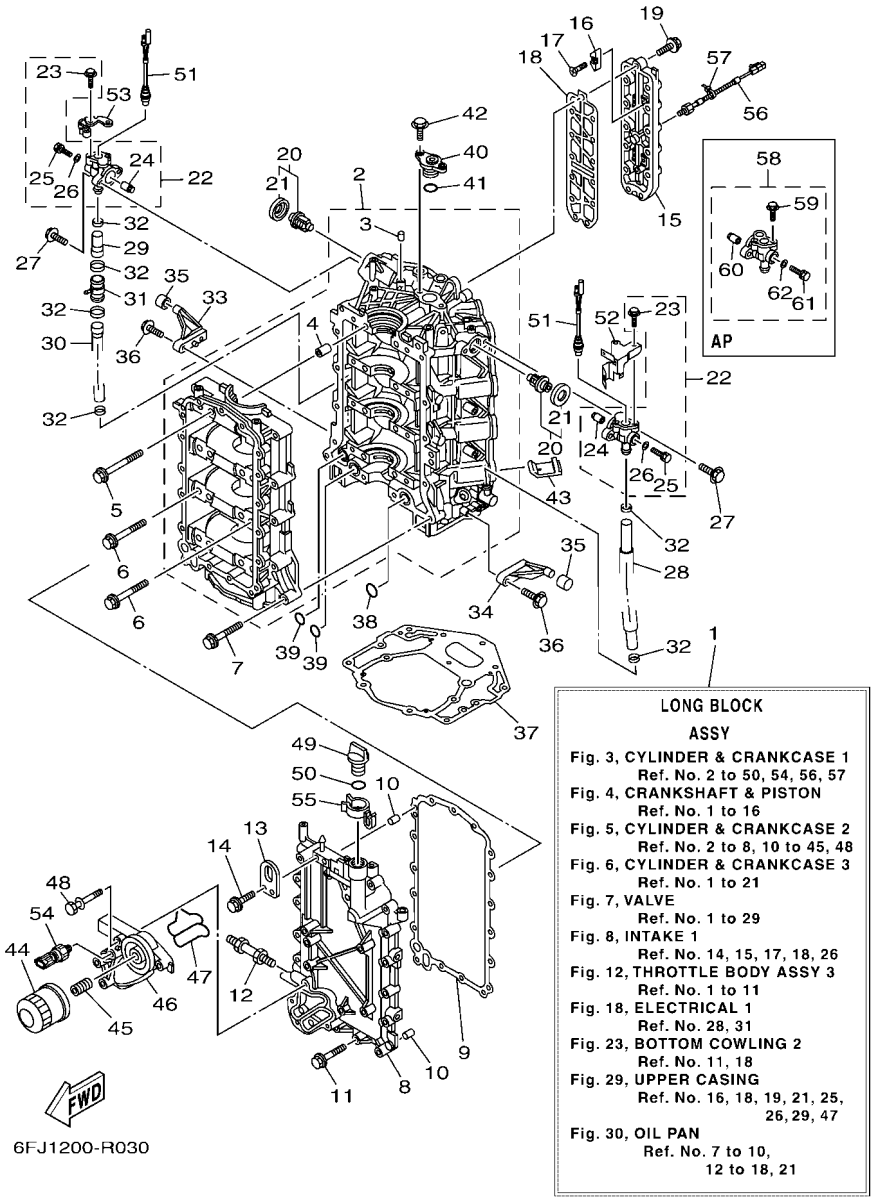

REF. NO.	PART NO. CODIGO Nº	DESCRIPTION DESCRIPCION	6FJ1	6FK1				REMARKS OBSERVACIONES
1	6DX–11000–01	LONG BLOCK ASSY SUBENSAMBLAJE DEL MOTOR	1	1				
2	6P2–15100–10	CRANKCASE ASSY CARTER COMPLETO	1	1				
3	93606–12019	.PIN, DOWEL .PASADOR DE CLAVIJA	1	1				
4	91814–18002	.PIN, DOWEL .PASADOR DE CLAVIJA	8	8				
5	6P2–15187–00	BOLT PERNO	8	8				
6	6P2–15481–00	BOLT 1 PERNO 1	8	8				
7	90119–08M66	BOLT, WITH WASHER TORNILLO CON ARANDELA	13	13				
8	6P2–15411–01–9S	COVER, CRANKCASE 1 CUBIERTA DE CARTER 1	1	1				
9	69J–15451–00	GASKET, CRANKCASE COVER 1 EMPAQ DE CUBIERTA DE CARTER	1	1				
10	93606–12019	PIN, DOWEL PASADOR DE CLAVIJA	2	2				
11	90119–08009	BOLT, WITH WASHER TORNILLO CON ARANDELA	17	17				
12	90116–10027	BOLT, STUD ESPARRAGO	1	1				
13	69J–11119–00	HANGER, ENGINE SOPORTE DEL MOTOR	1	1				
14	90105–06M09	BOLT, FLANGE TORNILLO	2	2				
15	6P2–1131C–00–9S	COVER, JOINT CUBIERTA DE UNION	1	1				
16	6E5–11325–00	ANODE ANODO	4	4				
17	98780–04016	SCREW, FLAT HEAD TORNILLO CABEZA PLANA	4	4				
18	6P2–1131B–00	GASKET, COVER EMPAQUE DE CUBIERTA	1	1				
19	90119–06MA4	BOLT, WITH WASHER TORNILLO CON ARANDELA	13	13				
20	67F–12411–01	THERMOSTAT TERMOSTAT	2	2				
21	67F–12412–00	.SEAL, THERMOSTAT .SELLO TERMOSTATO	1	1				
22	6P2–1240H–00–9S	ANODE ASSY ANODO COMPLET	2	2				
23	90109–06M80	.BOLT .PERNO	2	2				
24	6P3–11325–00	.ANODE .ANODO	1	1				
25	90105–05012	.BOLT, FLANGE .TORNILLO	1	1				
26	90430–05002	.GASKET .JUNTA	1	1				
27	97595–06525	BOLT, WITH WASHER PERNO CON ARANDELA	4	4				

FIG. 3 CYLINDER & CRANKCASE 1 — CILINDRO & CARTER 1

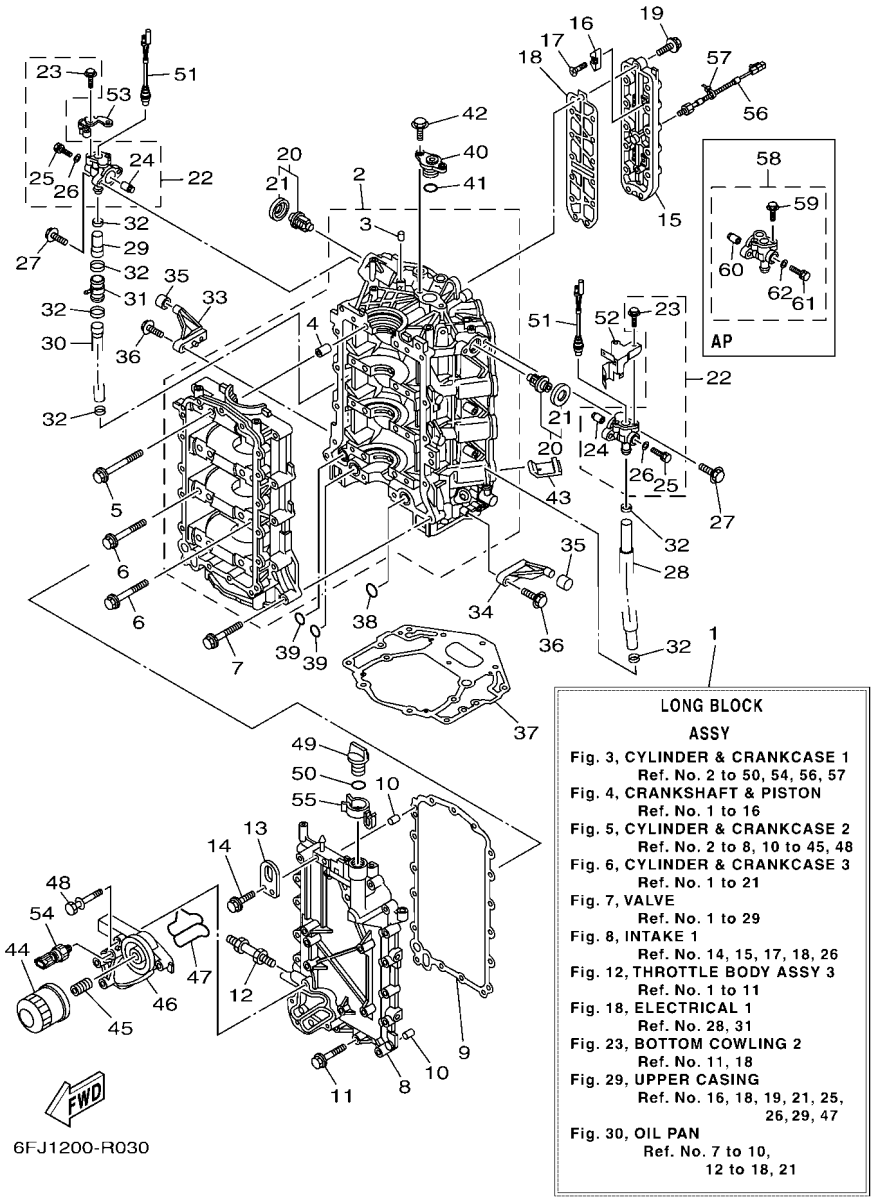

REF. NO.	PART NO. CODIGO Nº	DESCRIPTION DESCRIPCION	6FJ1	6FK1				REMARKS OBSERVACIONES
28	6P2–1243A–00	HOSE 1 TUBO 1	1	1				
29	6P2–1243E–00	HOSE 2 TUBO 2	1	1				
30	6P2–1243F–00	HOSE,3 MANGUERA 3	1	1				
31	6S1–24378–00	PIPE, JOINT 3 TUBO DE UNION 3	1	1				
32	90465–11M59	CLAMP BRIDA	6	6				
33	67F–42761–01	STOPPER RETEN 1	1	1				
34	6P2–42761–00	STOPPER RETEN 1	1	1				
35	68F–44533–01	DAMPER, UPPER MOUNT RUBBER AMORTIGUADOR SUPERIOR	2	2				
36	97595–06525	BOLT, WITH WASHER PERNO CON ARANDELA	4	4				
37	69J–11351–11	GASKET, CYLINDER JUNTA, DE CILINDRO	1	1				
38	93210–25552	O-RING ANILLO O	1	1				
39	93210–19MJ1	O-RING ANILLO O	2	2				
40	69J–11313–00	PLUG, BLIND TAPON CIEGO	1	1				
41	93210–25647	O-RING ANILLO O	1	1				
42	97595–06520	BOLT, WITH WASHER PERNO CON ARANDELA	2	2				
43	69J–14664–00	GROMMET, WATER SHUT TAPON	2	2				
44	69J–13440–03	ELEMENT ASSY, OIL CLEANER ELEMENTO FILTRO DE ACEITE	1	1				
45	6S5–12858–00	BOLT, UNION PERNO DE UNION	1	1				
46	6P2–13446–00–9S	CONNECTOR CONECTOR	1	1				
47	6P2–13477–00	GASKET EMPAQUE	1	1				
48	90119–06025	BOLT, WITH WASHER TORNILLO CON ARANDELA	5	5				
49	6G8–15363–00	PLUG, OIL TAPON DE ACEITE	1	1				
50	93210–24M79	O-RING ANILLO O	1	1				
51	6P2–82560–01	THERMO SWITCH ASSY INTER. DE TERMO	2	2				
52	6P2–82588–10	PLATE PLACA	1	1				
53	6P2–82389–10	PLATE 2 PLACA 2	1	1				
54	6AW–83651–00	SENDER, OIL PRESSURE TRASMISOR DE PRESION DE ACEITE	1	1				

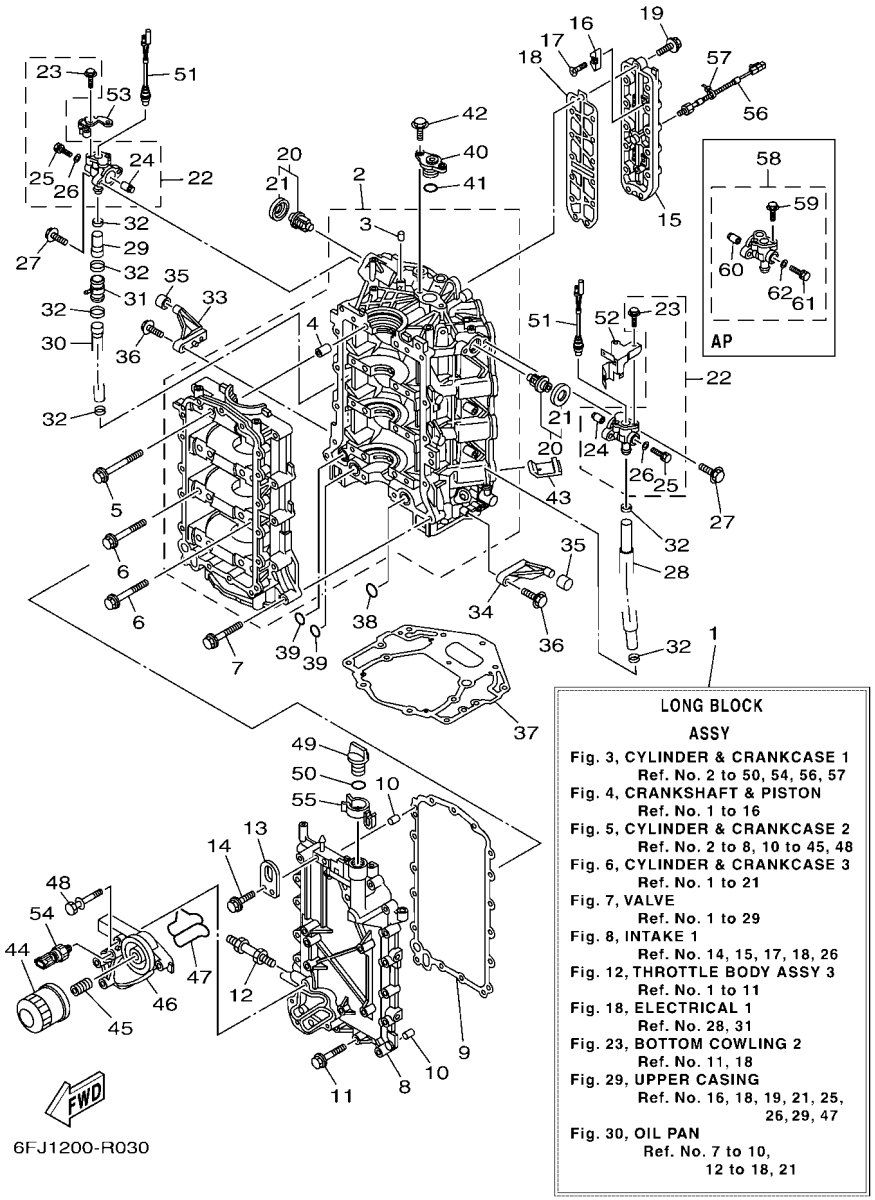

FIG. 3 CYLINDER & CRANKCASE 1 — CILINDRO & CARTER 1

REF. NO.	PART NO. CODIGO Nº	DESCRIPTION DESCRIPCION	6FJ1	6FK1				REMARKS OBSERVACIONES
55	6P2–83597–00	CLAMP GRAMPA	1	1				
56	6P2–85780–00	SENSOR, KNOCK CHOCAR SENSORIO	1	1				
57	90465–11M10	CLAMP BRIDA	1	1				
58	6P3–1240H–00–9S	ANODE ASSY ANODO COMPLET	1	1				AP AP
59	90109–06M80	.BOLT .PERNO	2	2				
60	6P3–11325–00	.ANODE .ANODO	1	1				
61	90105–05012	.BOLT, FLANGE .TORNILLO	1	1				
62	90430–05002	.GASKET .JUNTA	1	1				

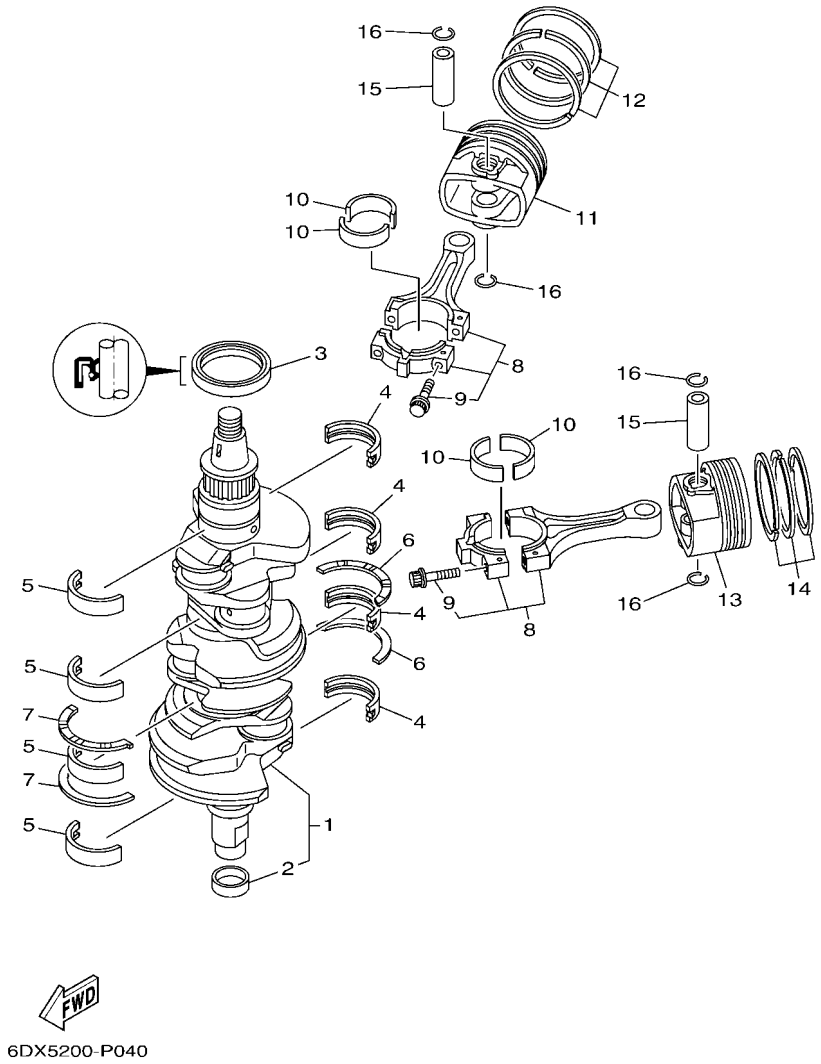

FIG. 4 CRANKSHAFT & PISTON — CIGUENAL & PISTON

REF. NO.	PART NO. CODIGO Nº	DESCRIPTION DESCRIPCION	6FJ1	6FK1				REMARKS OBSERVACIONES
1	6P2–11410–10	CRANKSHAFT CIGUENAL	1	1				
2	6CB–11478–00	.COLLAR .COLLAR	1	1				
3	93102–63004	OIL SEAL SELLO ACEITE	1	1				
4	6P2–11416–00	PLANE BEARING, CRANKSHAFT 1 COJINETE PLANO 1	4	4				UR YELLOW UR YELLOW
	6P2–11416–10	PLANE BEARING, CRANKSHAFT 1 COJINETE PLANO 1	4	4				UR GREEN UR GREEN
	6P2–11416–20	PLANE BEARING, CRANKSHAFT 1 COJINETE PLANO 1	4	4				UR BLUE UR BLUE
5	6P2–11417–00	PLANE BEARING, CRANKSHAFT 2 COJINETE PLANO 2	4	4				UR YELLOW UR YELLOW
	6P2–11417–10	PLANE BEARING, CRANKSHAFT 2 COJINETE PLANO 2	4	4				UR GREEN UR GREEN
	6P2–11417–20	PLANE BEARING, CRANKSHAFT 2 COJINETE PLANO 2	4	4				UR BLUE UR BLUE
6	6AW–11426–01	BEARING, THRUST 1 COJINETE DE EMPUJE 1	2	2				
7	6AW–11427–01	BEARING, THRUST 2 COJINETE DE EMPUJE 2	2	2				
8	6P2–11650–00	CONNECTING ROD ASSY BIELA COMPLETA	6	6				
9	63P–11654–10	.BOLT, CONNECTING ROD .TORNILLO DE BIELA	2	2				
10	6P2–11656–00	PLANE BEARING, CONNECTING ROD COJINETE PLANO	12	12				UR YELLOW UR YELLOW
	6P2–11656–10	PLANE BEARING, CONNECTING ROD COJINETE PLANO	12	12				UR GREEN UR GREEN
	6P2–11656–20	PLANE BEARING, CONNECTING ROD COJINETE PLANO	12	12				UR BLUE UR BLUE
11	6DX–11631–00–93	PISTON (STD) PISTON (NORMA)	3	3				
	6DX–11635–00	PISTON (0.25MM O/S) PISTON (0.25MM O/S)	3	3				AP AP
12	6S1–11603–00	PISTON RING SET (STD) JUEGO DE ANILLOS (NORMA)	3	3				
	6S1–11604–00	PISTON RING SET (0.25MM O/S) JUEGO DE ANILLOS (0.25MM O/S)	3	3				AP AP
13	6DX–11642–00–93	PISTON 2 (STD) PISTON 2 (NORMA)	3	3				
	6DX–11645–00	PISTON 2 (0.25MM O/S) PISTON 2 (0.25MM O/S)	3	3				AP AP
14	6S1–11603–00	PISTON RING SET (STD) JUEGO DE ANILLOS (NORMA)	3	3				
	6S1–11604–00	PISTON RING SET (0.25MM O/S) JUEGO DE ANILLOS (0.25MM O/S)	3	3				AP AP
15	63P–11633–10	PIN, PISTON PASADOR, PISTON	6	6				
16	63P–11634–00	CLIP, PISTON PIN PRESILLA, BULON DE PISTON	12	12				

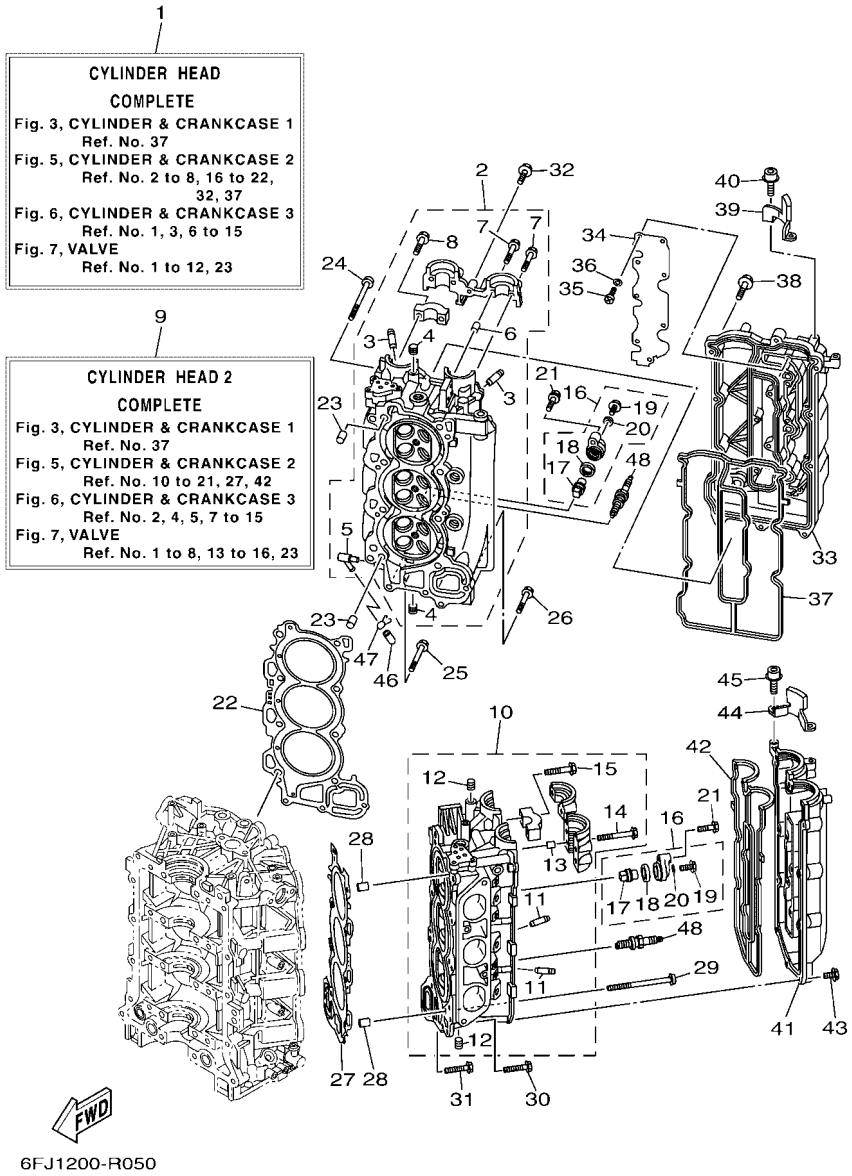

6FJ1200-R050

FIG. 5 CYLINDER & CRANKCASE 2 — CILINDRO & CARTER 2

REF. NO.	PART NO. CODIGO Nº	DESCRIPTION DESCRIPCION	6FJ1	6FK1				REMARKS OBSERVACIONES
1	6P2–W009A–04–9S	CYLINDER HEAD COMPLETE CILINDRD CULATA COMPLETO	1	1				
2	6P2–11110–11–9S	CYLINDER HEAD ASSY CULATA DE CILINDRO COMPLETA	1	1				
3	6S5–11133–10	.GUIDE, VALVE 1 .GUIA DE VALVULA 1	12	12				
4	90344–51019	.PLUG, TAPER SCREW .TAPON DE TORNILLO AHUSADO	7	7				
5	676–11372–00	.NIPPLE, HOSE .NIPLE DE MANGUERA	1	1				
6	91809–08006	.PIN, DOWEL .PASADOR DE CLAVIJA	2	2				
7	90119–07001	.BOLT, WITH WASHER .TORNILLO CON ARANDELA	4	4				
8	90119–07234	.BOLT, WITH WASHER .TORNILLO CON ARANDELA	14	14				
9	6P2–W009C–04–9S	CYLINDER HEAD 2 COMPLETE CULATA DE CILINDRO COMPL. 2	1	1				
10	6P2–11120–11–9S	CYLINDER HEAD ASSY 2 CULATA DE CILINDRO COMPL. 2	1	1				
11	6S5–11133–10	.GUIDE, VALVE 1 .GUIA DE VALVULA 1	12	12				
12	90344–51019	.PLUG, TAPER SCREW .TAPON DE TORNILLO AHUSADO	3	3				
13	91809–08006	.PIN, DOWEL .PASADOR DE CLAVIJA	4	4				
14	90119–07235	.BOLT/WASHER-CAM CAPS .TORNILLO CON ARANDELA	6	6				
15	90119–07234	.BOLT, WITH WASHER .TORNILLO CON ARANDELA	12	12				
16	69J–11301–00	ANODE COVER ASSY CONJUNTO CUBIERTA DE ANODO	4	4				
17	67F–11325–01	.ANODE .ANODO	1	1				
18	67F–11328–00	.GROMMET, ANODE .TAPON	1	1				
19	90105–06M07	.BOLT, FLANGE .TORNILLO	1	1				
20	90430–06M03	.GASKET .JUNTA	1	1				
21	97575–08540	BOLT, WITH WASHER PERNO CON ARANDELA	4	4				
22	6P2–11181–00	GASKET, CYLINDER HEAD 1 JUNTA, DE CULATA 1	1	1				
23	99530–14016	PIN, DOWEL PASADOR, DE ESPIGA	2	2				
24	90155–10004	SCREW, FLAT FILLISTER TORNILLO CABEZA PLANA RAN.	8	8				
25	90119–08M91	BOLT, WITH WASHER TORNILLO CON ARANDELA	2	2				
26	90119–08021	BOLT, WITH WASHER TORNILLO CON ARANDELA	1	1				
27	6P2–11182–00	GASKET, CYLINDER HEAD 2 EMPAQUE CULATA DE CILINDRO 2	1	1				

FIG. 5 CYLINDER & CRANKCASE 2 — CILINDRO & CARTER 2

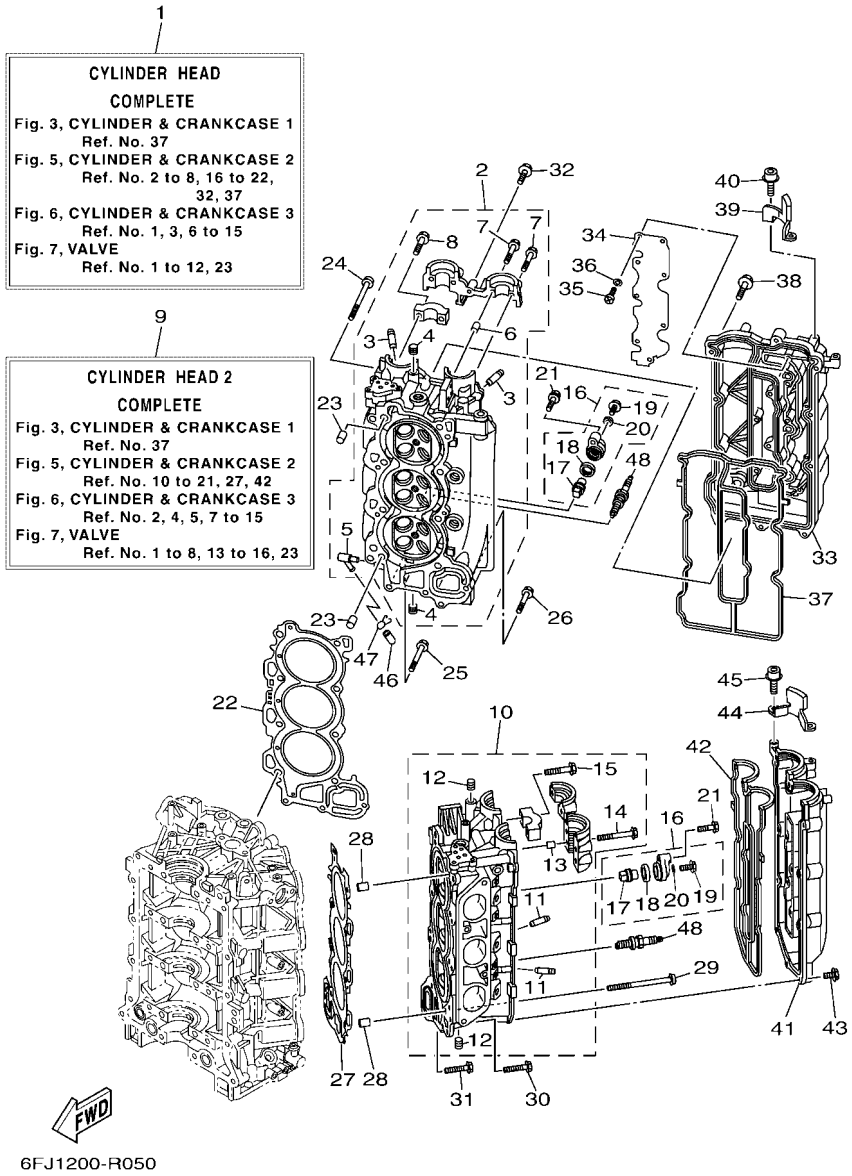

6FJ1200-R050

REF. NO.	PART NO. CODIGO Nº	DESCRIPTION DESCRIPCION	6FJ1	6FK1				REMARKS OBSERVACIONES
28	99530–14016	PIN, DOWEL PASADOR, DE ESPIGA	2	2				
29	90155–10004	SCREW, FLAT FILLISTER TORNILLO CABEZA PLANA RAN.	8	8				
30	90119–08M91	BOLT, WITH WASHER TORNILLO CON ARANDELA	2	2				
31	90119–08021	BOLT, WITH WASHER TORNILLO CON ARANDELA	1	1				
32	97595–06530	BOLT, WITH WASHER PERNO CON ARANDELA	1	1				
33	6P2–11191–00–9S	COVER, CYLINDER HEAD 1 TAPA CULATA DE CILINDRO 1	1	1				
34	6P2–11135–00	PLATE, BREATHER 3 PLACA RESPIRADERO 3	1	1				
35	98507–04008	SCREW, PAN HEAD TORNILLO DE CABEZA CON PLANA	9	9				
36	92907–04600	WASHER ARANDELA	9	9				
37	6P2–11193–00	GASKET, HEAD COVER 1 EMPAQUE	1	1				
38	97595–06530	BOLT, WITH WASHER PERNO CON ARANDELA	14	14				
39	6P2–15142–00	GUIDE 1 GUIA 1.	1	1				
40	90110–06150	BOLT, HEXAGON SOCKET HEAD TORNILLO ALLEN	2	2				
41	6P2–11192–00–9S	COVER, CYLINDER HEAD 2 TAPA CULATA DE CILINDRO 2	1	1				
42	6P2–11194–00	GASKET, HEAD COVER 2 EMPAQUE DE TAPA DE CULATA 2	1	1				
43	97595–06530	BOLT, WITH WASHER PERNO CON ARANDELA	14	14				
44	6P2–15143–00	GUIDE GUIA	1	1				
45	90110–06150	BOLT, HEXAGON SOCKET HEAD TORNILLO ALLEN	2	2				
46	6P2–13448–00	CAP TAPA	1	1				
47	90467–08M18	CLIP PRESILLA	1	1				
48	94702–00400	PLUG, SPARK (NGK LFR6A-11) BUJIA (NGK LFR6A-11)	6	6				

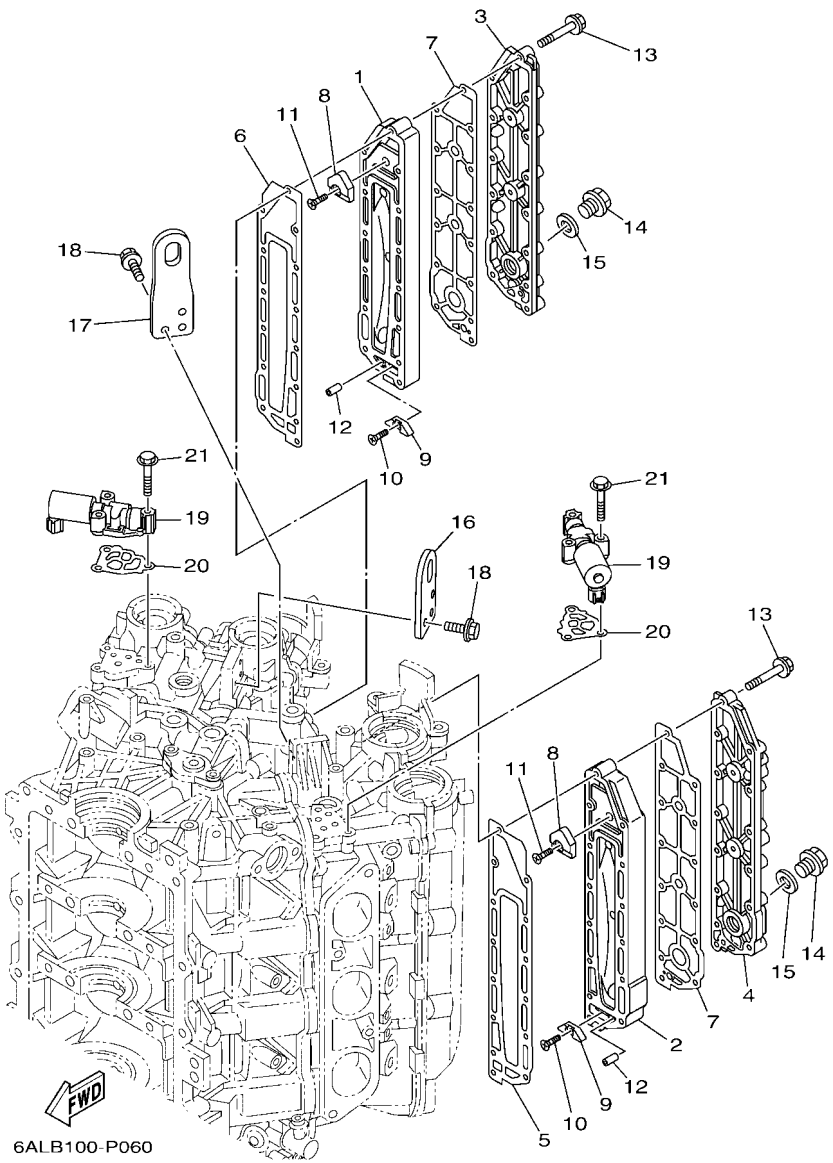

FIG. 6 CYLINDER & CRANKCASE 3 — CILINDRO & CARTER 3

REF. NO.	PART NO. CODIGO Nº	DESCRIPTION DESCRIPCION	6FJ1	6FK1				REMARKS OBSERVACIONES
1	69J–41111–01–9S	INNER COVER, EXHAUST CUBIERTA INTERIOR DE ESCAPE	1	1				
2	69J–41121–01–9S	INNER COVER,EXHAUST CUBIERTA INTERIOR DE ESCAPE	1	1				
3	69J–41113–02–9S	OUTER COVER, EXHAUST CUBOERTA EXTERIOR DE ESCAPE	1	1				
4	69J–41123–02–9S	OUTER COVER, EXHAUST CUBOERTA EXTERIOR DE ESCAPE	1	1				
5	6P2–41112–00	GASKET, EXHAUST INNER COVER EMPAQUE	1	1				
6	6P2–41122–00	GASKET, EXHAUST INNER COVER EMPAQUE	1	1				
7	6P2–41114–00	GASKET, EXHAUST OUTER COVER EMPAQUE	2	2				
8	6P2–11325–00	ANODE ANODO	2	2				
9	6E5–11325–00	ANODE ANODO	2	2				
10	98780–04016	SCREW, FLAT HEAD TORNILLO CABEZA PLANA	2	2				
11	90151–06M02	SCREW, COUNTERSUNK TORNILLO EMBUTIDO	2	2				
12	91690–40010	PIN, SPRING PASADOR DE RESORTE	2	2				
13	90119–06027	BOLT, WITH WASHER TORNILLO CON ARANDELA	28	28				
14	90340–18M09	PLUG, STRAIGHT SCREW TORNILLO, DE DRENAJE	2	2				
15	90201–186F1	WASHER, PLATE ARANDELA PLANA	2	2				
16	6P2–11119–00	HANGER, ENGINE SOPORTE DEL MOTOR	1	1				
17	6P2–1111E–00	HANGER, ENGINE 2 MOTOR DE COLGADOR 2	1	1				
18	90105–06M09	BOLT, FLANGE TORNILLO	6	6				
19	6CB–86120–00	SOLENOID VALVE ASSY VALVULA SOLENOIDE CONJ.	2	2				
20	6CB–1242F–00	GASKET, FILTER EMPAQUE DE FILTRO	2	2				
21	90105–06035	BOLT, FLANGE TORNILLO	6	6				

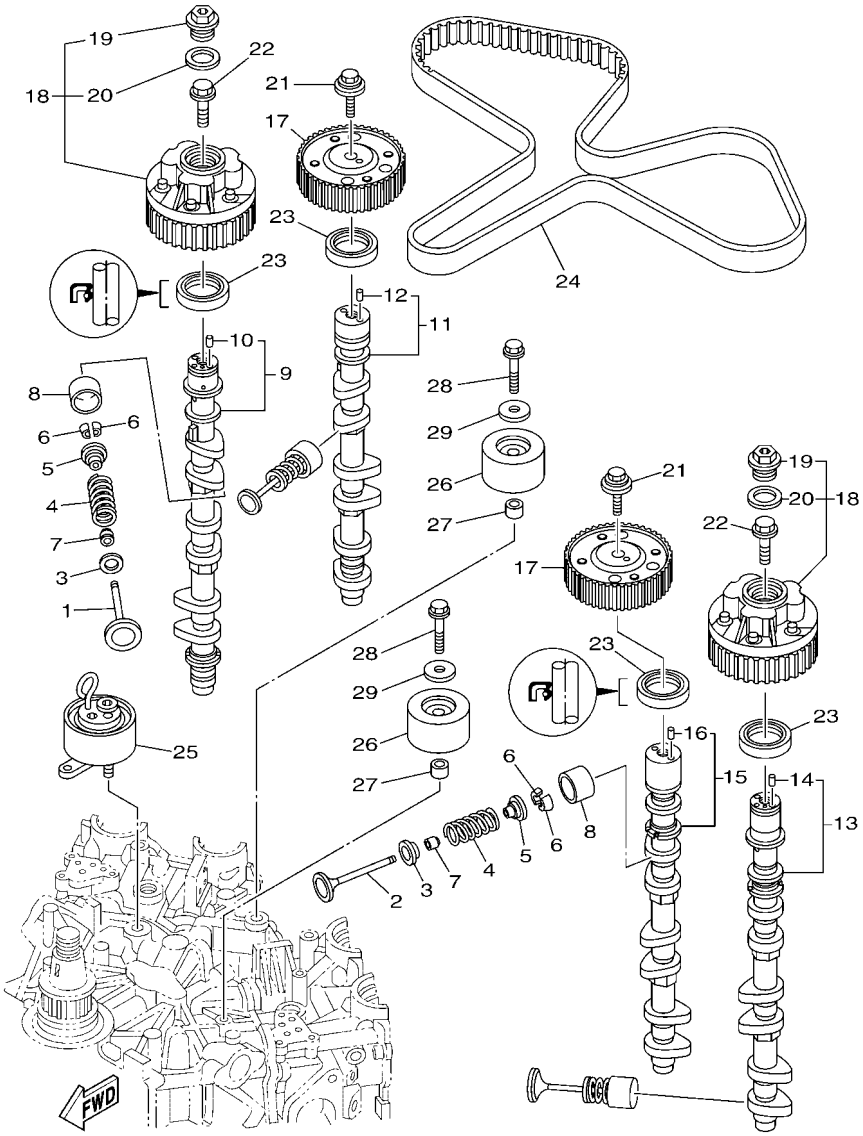

FIG. 7 VALVE — VALVULA

REF. NO.	PART NO. CODIGO Nº	DESCRIPTION DESCRIPCION	6FJ1	6FK1				REMARKS OBSERVACIONES
1	6P2–12111–10	VALVE, INTAKE VALVULA DE ADMISION	12	12				
2	6DX–12121–00	VALVE, EXHAUST VALVULA DE ESCAPE	12	12				
3	K0F–A3743–00	SEAT, VALVE SPRING ASIENTO RESORTE DE VALVULA	24	24				
4	6CB–12113–00	SPRING, VALVE INNER RESORTE VALVULA INTERNA	24	24				
5	K0F–A3741–00	RETAINER, VALVE SPRING RETEN RESORTE DE VALVULA	24	24				
6	K0F–A3742–00	LOCK, VALVE SPRING RETAINER SEGURO DE VALVULA	48	48				
7	51Y–12119–00	SEAL, VALVE STEM SELLO DE ACEITE VALVULA	24	24				
8	K0F–A3751–00	LIFTER, VALVE (3.000) LEVANTADOR DE VALVULA (3.000)	24	24				UR UR
	K0F–A3751–10	LIFTER, VALVE (3.025) LEVANTADOR DE VALVULA (3.025)	24	24				UR UR
	K0F–A3751–20	LIFTER, VALVE (3.050) LEVANTADOR DE VALVULA (3.050)	24	24				UR UR
	K0F–A3751–30	LIFTER, VALVE (3.075) LEVANTADOR DE VALVULA (3.075)	24	24				UR UR
	K0F–A3751–40	LIFTER, VALVE (3.100) LEVANTADOR DE VALVULA (3.100)	24	24				UR UR
	K0F–A3751–50	LIFTER, VALVE (3.122) LEVANTADOR DE VALVULA (3.122)	24	24				UR UR
	K0F–A3751–60	LIFTER, VALVE (3.142) LEVANTADOR DE VALVULA (3.142)	24	24				UR UR
	K0F–A3751–70	LIFTER, VALVE (3.162) LEVANTADOR DE VALVULA (3.162)	24	24				UR UR
	K0F–A3751–80	LIFTER, VALVE (3.182) LEVANTADOR DE VALVULA (3.182)	24	24				UR UR
	K0F–A3751–90	LIFTER, VALVE (3.202) LEVANTADOR DE VALVULA (3.202)	24	24				UR UR
	K0F–A3751–A0	LIFTER, VALVE (3.222) LEVANTADOR DE VALVULA (3.222)	24	24				UR UR
	K0F–A3751–B0	LIFTER, VALVE (3.242) LEVANTADOR DE VALVULA (3.242)	24	24				UR UR
	K0F–A3751–C0	LIFTER, VALVE (3.262) LEVANTADOR DE VALVULA (3.262)	24	24				UR UR
	K0F–A3751–D0	LIFTER, VALVE (3.282) LEVANTADOR DE VALVULA (3.282)	24	24				UR UR
	K0F–A3751–E0	LIFTER, VALVE (3.302) LEVANTADOR DE VALVULA (3.302)	24	24				UR UR
	K0F–A3751–F0	LIFTER, VALVE (3.322) LEVANTADOR DE VALVULA (3.322)	24	24				UR UR
	K0F–A3751–G0	LIFTER, VALVE (3.342) LEVANTADOR DE VALVULA (3.342)	24	24				UR UR
	K0F–A3751–H0	LIFTER, VALVE (3.362) LEVANTADOR DE VALVULA (3.362)	24	24				UR UR
	K0F–A3751–J0	LIFTER, VALVE (3.382) LEVANTADOR DE VALVULA (3.382)	24	24				UR UR
	K0F–A3751–K0	LIFTER, VALVE (3.402) LEVANTADOR DE VALVULA (3.402)	24	24				UR UR

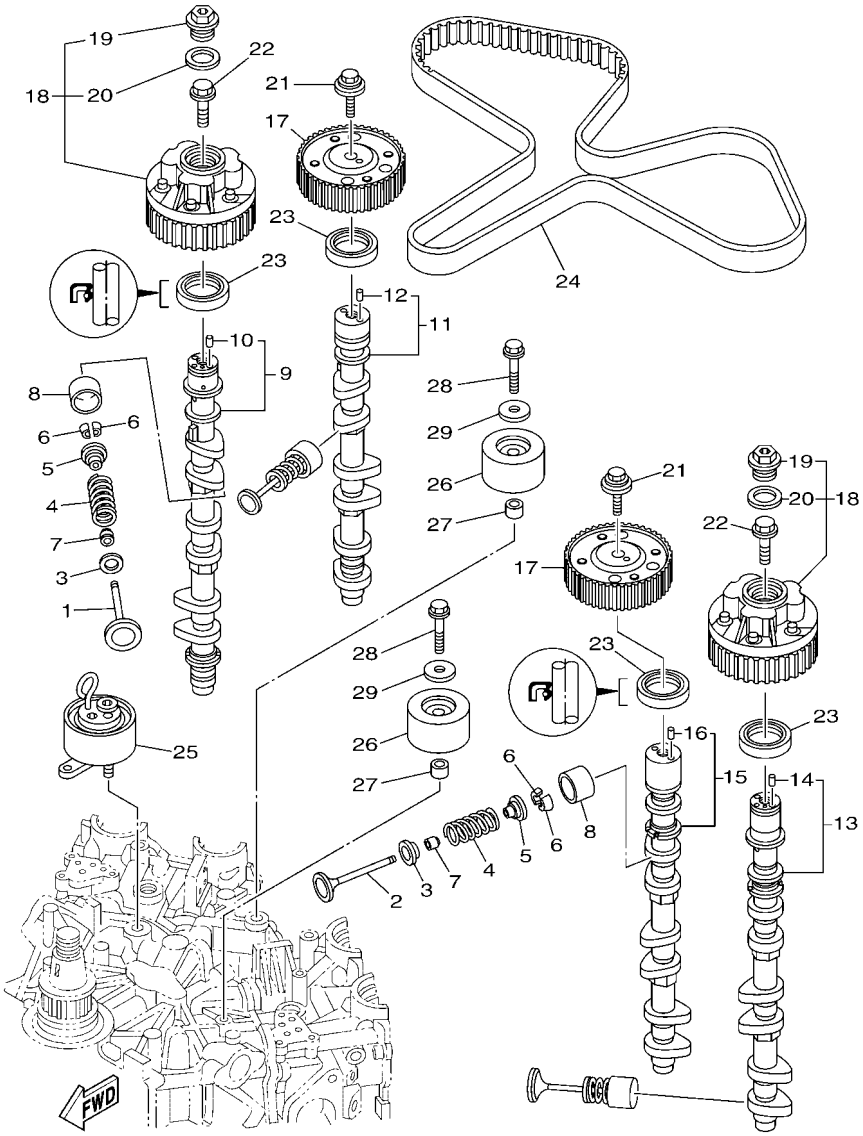

FIG. 7 VALVE — VALVULA

REF. NO.	PART NO. CODIGO Nº	DESCRIPTION DESCRIPCION	6FJ1	6FK1				REMARKS OBSERVACIONES
8	K0F–A3751–L0	LIFTER, VALVE (3.422) LEVANTADOR DE VALVULA (3.422)	24	24				UR UR
	K0F–A3751–M0	LIFTER, VALVE (3.442) LEVANTADOR DE VALVULA (3.442)	24	24				UR UR
	K0F–A3751–N0	LIFTER, VALVE (3.462) LEVANTADOR DE VALVULA (3.462)	24	24				UR UR
	K0F–A3751–P0	LIFTER, VALVE (3.482) LEVANTADOR DE VALVULA (3.482)	24	24				UR UR
	K0F–A3751–R0	LIFTER, VALVE (3.502) LEVANTADOR DE VALVULA (3.502)	24	24				UR UR
	K0F–A3751–S0	LIFTER, VALVE (3.522) LEVANTADOR DE VALVULA (3.522)	24	24				UR UR
	K0F–A3751–T0	LIFTER, VALVE (3.542) LEVANTADOR DE VALVULA (3.542)	24	24				UR UR
	K0F–A3753–00	LIFTER, VALVE (3.562) LEVANTADOR DE VALVULA (3.562)	24	24				UR UR
	K0F–A3753–10	LIFTER, VALVE (3.582) LEVANTADOR DE VALVULA (3.582)	24	24				UR UR
	K0F–A3753–20	LIFTER, VALVE (3.602) LEVANTADOR DE VALVULA (3.602)	24	24				UR UR
	K0F–A3753–30	LIFTER, VALVE (3.625) LEVANTADOR DE VALVULA (3.625)	24	24				UR UR
	K0F–A3753–40	LIFTER, VALVE (3.650) LEVANTADOR DE VALVULA (3.650)	24	24				UR UR
	K0F–A3753–50	LIFTER, VALVE (3.675) LEVANTADOR DE VALVULA (3.675)	24	24				UR UR
	K0F–A3753–60	LIFTER, VALVE (3.700) LEVANTADOR DE VALVULA (3.700)	24	24				UR UR
	K0F–A3753–70	LIFTER, VALVE (3.725) LEVANTADOR DE VALVULA (3.725)	24	24				UR UR
9	6P2–12171–11	CAMSHAFT 1 ARBOL DE LEVAS 1	1	1				
10	93605–10108	.PIN, DOWEL .PASADOR DE CLAVIJA	1	1				
11	6P2–12181–11	CAMSHAFT 2 ARBOL DE LEVAS 2	1	1				
12	93605–10108	.PIN, DOWEL .PASADOR DE CLAVIJA	1	1				
13	6P2–12172–11	CAMSHAFT 3 ARBOL DE LEVAS 3	1	1				
14	93605–10108	.PIN, DOWEL .PASADOR DE CLAVIJA	1	1				
15	6P2–12182–11	CAMSHAFT 4 ARBOL DE LEVAS 4	1	1				
16	93605–10108	.PIN, DOWEL .PASADOR DE CLAVIJA	1	1				
17	6FA–11567–00	GEAR, DRIVEN 2 ENGRANAJE TRACCION 2	2	2				
18	6P2–12645–20	PULLEY ASSY 1 POLEA COMPL. 1	2	2				
19	6P2–12623–00	.BOLT .PERNO	1	1				
20	6P2–12663–00	.GASKET .EMPAQUE	1	1				

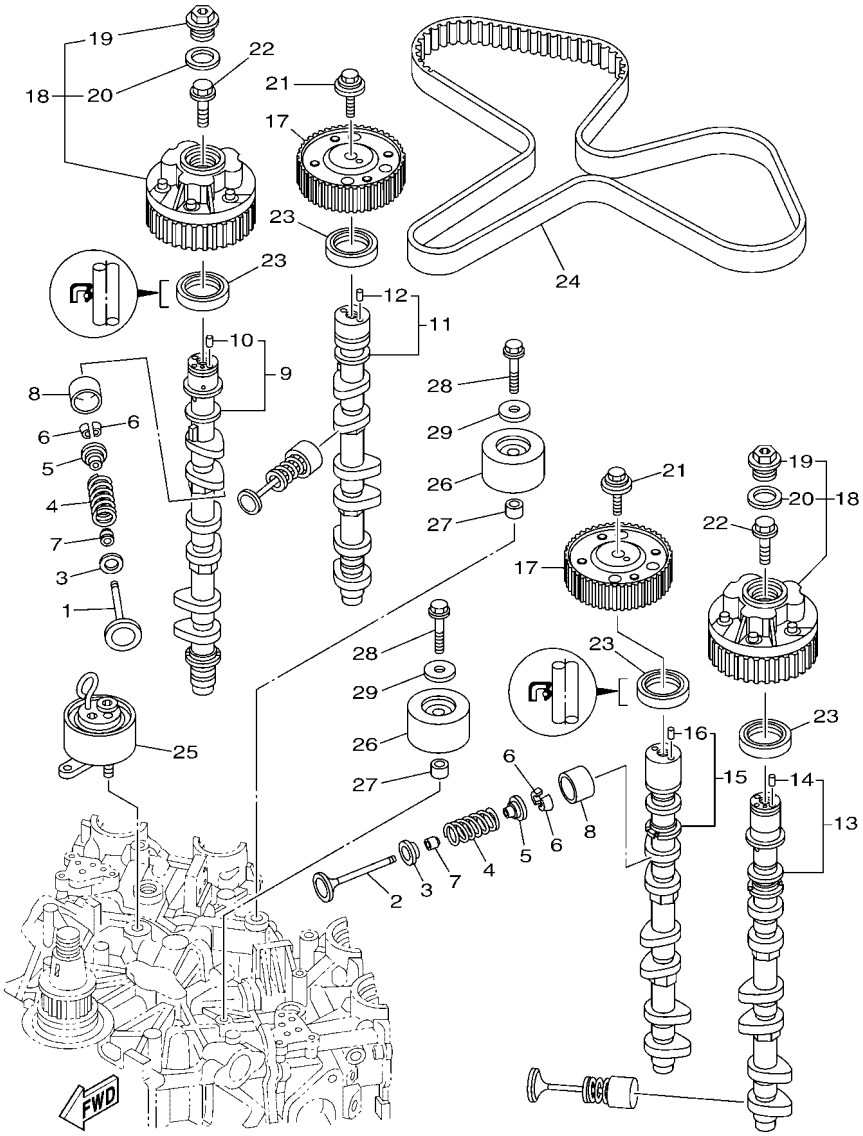

6DX6200-Q070

FIG. 7 VALVE — VALVULA

REF. NO.	PART NO. CODIGO Nº	DESCRIPTION DESCRIPCION	6FJ1	6FK1				REMARKS OBSERVACIONES
21	90119–10050	BOLT, WITH WASHER TORNILLO CON ARANDELA	2	2				
22	6P2–12615–00	BOLT PERNO	2	2				
23	93102–38008	OIL SEAL SELLO ACEITE	4	4				
24	6P2–46241–02	BELT CORREA	1	1				
25	6P2–11590–01	TENSIONER ASSY TENSOR COMPLET	1	1				
26	6P2–15512–00	GEAR, IDLER 1 ENGRENAJE NEUTRO	2	2				
27	99530–14016	PIN, DOWEL PASADOR, DE ESPIGA	2	2				
28	90119–10M07	BOLT, WITH WASHER TORNILLO CON ARANDELA	2	2				
29	90201–10M01	WASHER, PLATE ARANDELA PLANA	2	2				

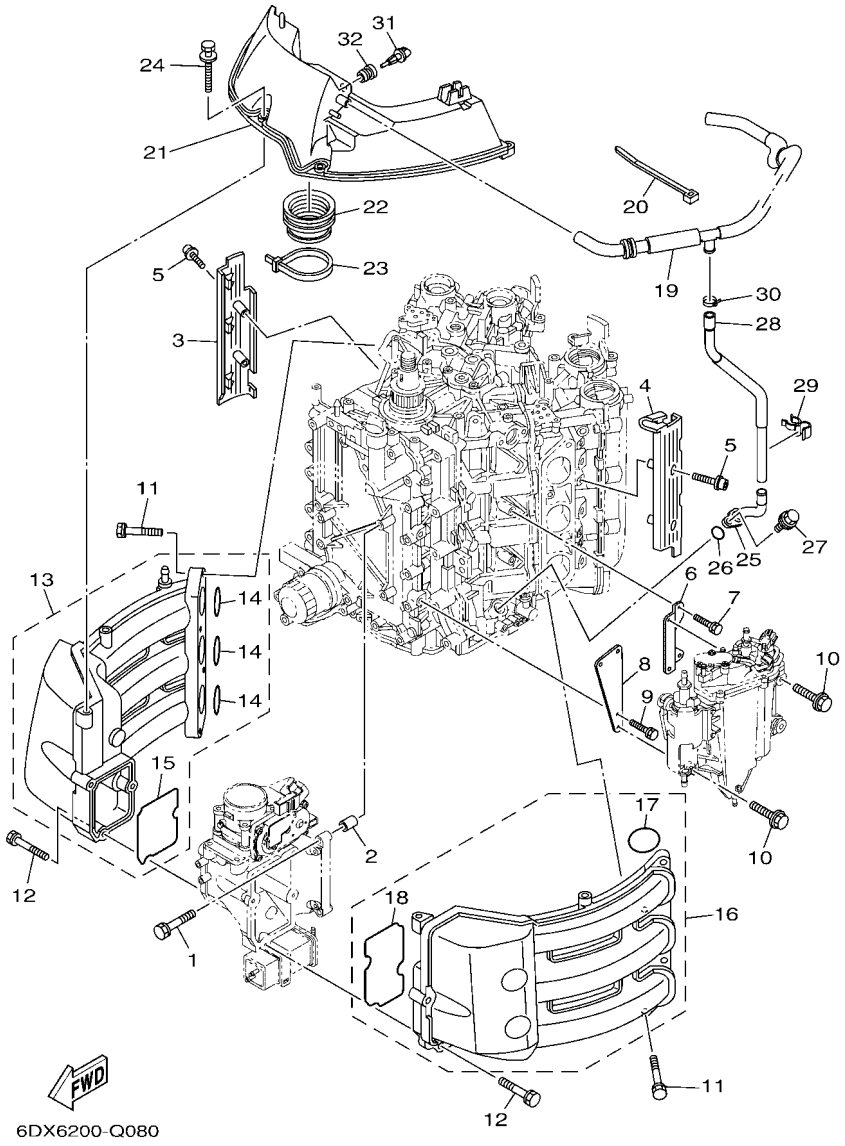

FIG. 8 INTAKE 1 — ADMISION 1

REF. NO.	PART NO. CODIGO Nº	DESCRIPTION DESCRIPCION	6FJ1	6FK1				REMARKS OBSERVACIONES
1	97575–08540	BOLT, WITH WASHER PERNO CON ARANDELA	4	4				
2	99530–10114	PIN, DOWEL PASADOR, DE ESPIGA	2	2				
3	6P2–13564–00	COVER, MANIFOLD CUBIERTA DE MULTIPLE	1	1				
4	6P2–13594–00	COVER, MANIFOLD 2 CUBIERTA MULTIPLE 2	1	1				
5	90110–06038	BOLT, HEXAGON SOCKET HEAD TORNILLO ALLEN	4	4				
6	6P2–24422–10	PLATE PLACA	1	1				
7	97575–06516	BOLT, WITH WASHER PERNO CON ARANDELA	2	2				
8	6P2–24419–00	BRKT., SEPARATOR SOPORTE SEPARADOR	1	1				
9	97575–06516	BOLT, WITH WASHER PERNO CON ARANDELA	2	2				
10	90119–06269	BOLT, WITH WASHER TORNILLO CON ARANDELA	4	4				
11	97575–08540	BOLT, WITH WASHER PERNO CON ARANDELA	8	8				
12	90119–06MA6	BOLT, WITH WASHER TORNILLO CON ARANDELA	7	7				
13	6P2–13641–00	MANIFOLD, INTAKE 1 CONECTOR DE ADMISSION 1	1	1				
14	6P2–13645–00	.GASKET, MANIFOLD 1 .EMPAQUE	3	3				
15	6P2–13646–00	.GASKET, MANIFOLD 2 .EMPAQ. DE MULTIPLE 2	1	1				
16	6P2–13642–00	MANIFOLD 2 MULTIPLE 2	1	1				
17	6P2–13645–00	.GASKET, MANIFOLD 1 .EMPAQUE	3	3				
18	6P2–13647–00	.GASKET, MANIFOLD 3 .EMPAQ. DE MULTIPLE 3	1	1				
19	6P2–15373–02	PIPE, BREATHER MANGUELA DE RESPIRADERO	1	1				
20	90465–13M18	CLAMP BRIDA	1	1				
21	6P2–14440–00	SILENCER ASSY, INTAKE SILENCIADOR COMPL DE ADMISION	1	1				
22	6P2–1441J–00	PIPE, SILENCER TUBO	1	1				
23	90464–99004	CLAMP BRIDA	1	1				
24	90119–06M35	BOLT, WITH WASHER TORNILLO CON ARANDELA	4	4				
25	6P2–11372–00	NIPPLE, HOSE NIPLE DE MANGUERA	1	1				
26	93210–19MJ3	O-RING ANILLO O	1	1				
27	97595–06620	BOLT, WITH WASHER PERNO CON ARANDELA	1	1				

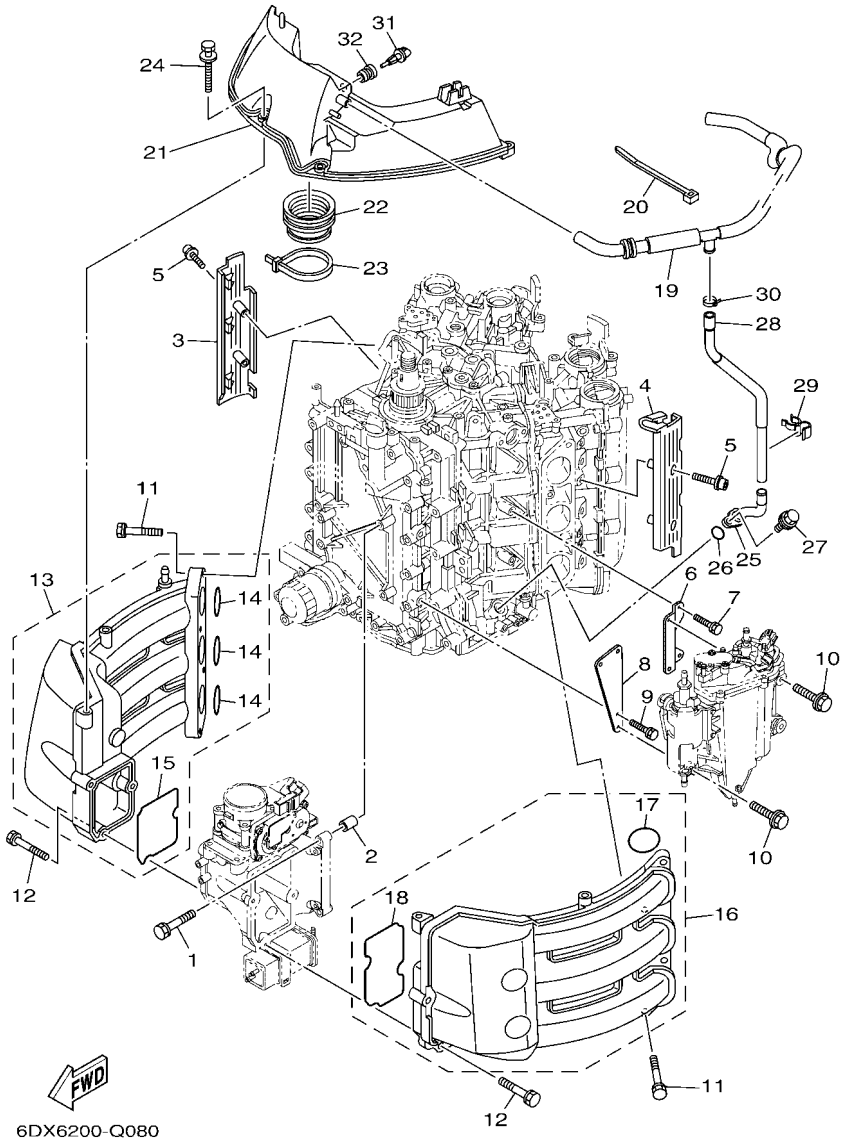

FIG. 8 INTAKE 1 — ADMISION 1

REF. NO.	PART NO. CODIGO Nº	DESCRIPTION DESCRIPCION	6FJ1	6FK1				REMARKS OBSERVACIONES
28	6P2–11377–00	HOSE MANGUERA	1	1				
29	90464–20011	CLAMP BRIDA	1	1				
30	90465–11M10	CLAMP BRIDA	1	1				
31	63P–85886–00	SENSOR, AIR TEMPERATURE SENSOR	1	1				
32	63P–14435–00	GROMMET ANILLO PROTECTOR	1	1				

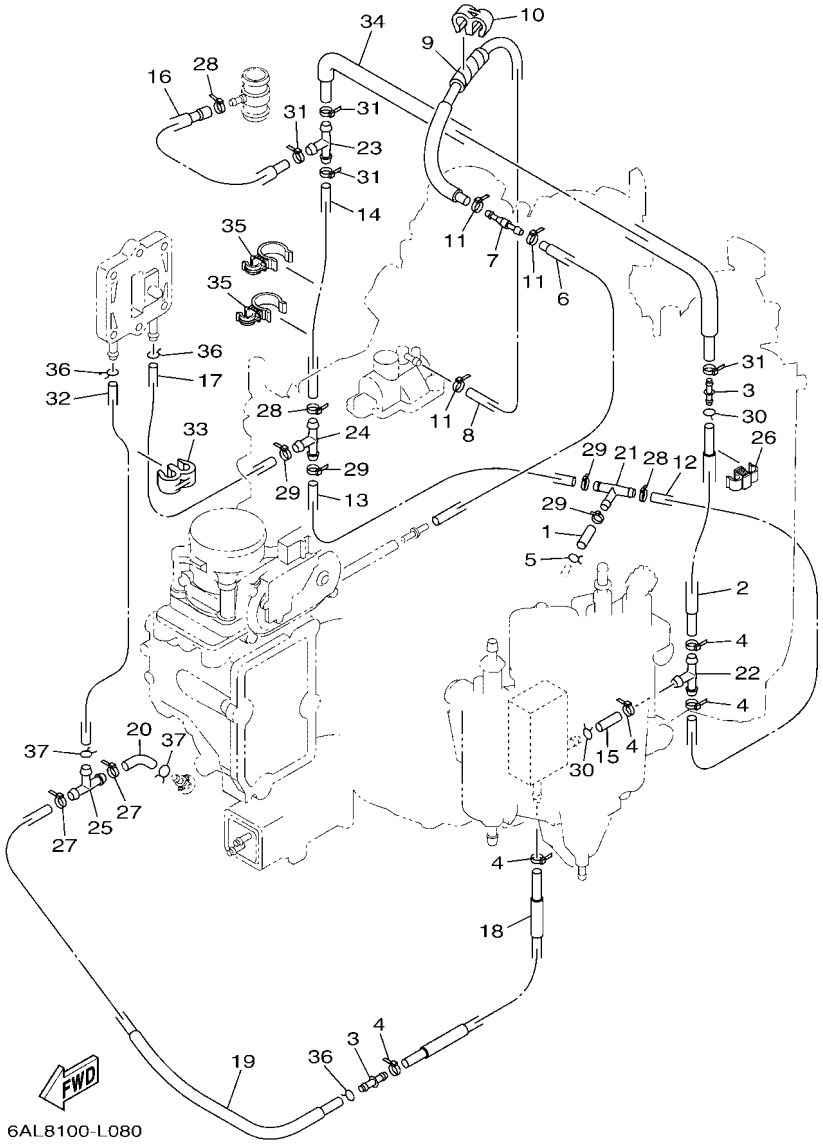

FIG. 9 INTAKE 2 — ADMISION 2

REF. NO.	PART NO. CODIGO Nº	DESCRIPTION DESCRIPCION	6FJ1	6FK1				REMARKS OBSERVACIONES
1	90445–09040	HOSE (L50) TUBO (L50)	1	1				
2	6P2–12484–01	PIPE 4 TUBO 4	1	1				
3	6CE–24376–01	PIPE, JOINT 1 TUBO DE UNION 1	2	2				
4	90465–11M10	CLAMP BRIDA	5	5				
5	90467–09M03	CLIP PRESILLA	1	1				
6	6P2–12482–00	PIPE 2 TUBO 2	1	1				
7	6E5–21744–00	BREATHER RESPIRADERO	1	1				
8	6P2–12483–00	PIPE 3 TUBO 3	1	1				
9	90446–10M01	HOSE (L60) TUBO (L60)	1	1				
10	90464–60067	CLAMP BRIDA	1	1				
11	90465–11M10	CLAMP BRIDA	3	3				
12	90445–09041	HOSE (L500) TUBO (L500)	1	1				
13	90445–09224	HOSE (L270) TUBO (L270)	1	1				
14	90445–09097	HOSE (L250) TUBO (L250)	1	1				
15	90445–09220	HOSE (L30) TUBO (L30)	1	1				
16	6P2–12485–00	PIPE 5 TUBO 5	1	1				
17	6P2–1248A–00	PIPE 8 TUBO 8	1	1				
18	6P2–1248E–00	PIPE 9 TUBO	1	1				
19	6P2–14752–00	PIPE, OUTLET TUBO BOCA DE SALIDA	1	1				
20	61A–24316–00	PIPE 6 TUBO 6	1	1				
21	688–24378–00	PIPE, JOINT 3 TUBO DE UNION 3	1	1				
22	688–24378–00	PIPE, JOINT 3 TUBO DE UNION 3	1	1				
23	688–24378–00	PIPE, JOINT 3 TUBO DE UNION 3	1	1				
24	688–24378–00	PIPE, JOINT 3 TUBO DE UNION 3	1	1				
25	688–24378–00	PIPE, JOINT 3 TUBO DE UNION 3	1	1				
26	90464–09013	CLAMP BRIDA	1	1				
27	90465–11M10	CLAMP BRIDA	2	2				

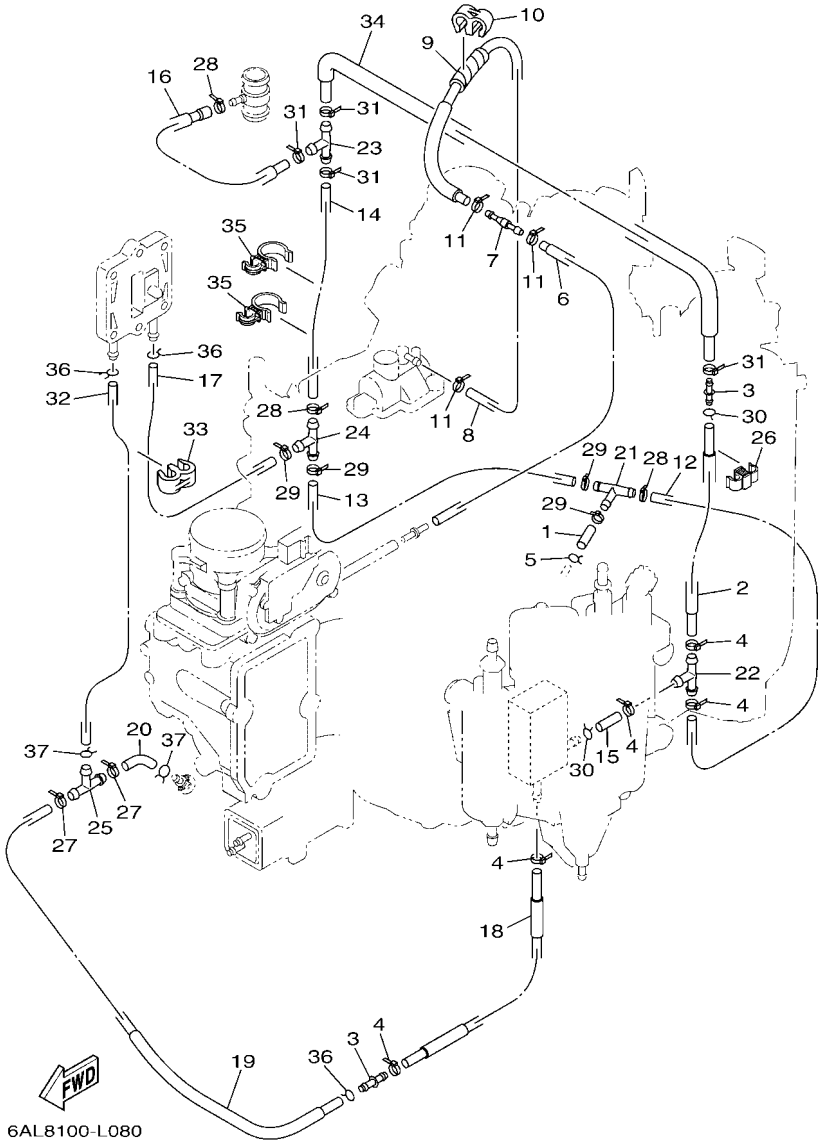

FIG. 9 INTAKE 2 — ADMISION 2

REF. NO.	PART NO. CODIGO Nº	DESCRIPTION DESCRIPCION	6FJ1	6FK1				REMARKS OBSERVACIONES
28	90465–11M10	CLAMP BRIDA	3	3				
29	90465–11M10	CLAMP BRIDA	4	4				
30	90467–08M18	CLIP PRESILLA	2	2				
31	90465–11M10	CLAMP BRIDA	4	4				
32	90445–09304	HOSE (L310) TUBO (L310)	1	1				
33	90464–60067	CLAMP BRIDA	1	1				
34	6P2–12481–12	PIPE 1 TUBO 1	1	1				
35	90464–21002	CLAMP BRIDA	2	2				
36	90467–08M18	CLIP PRESILLA	3	3				
37	90467–09M09	CLIP PRESILLA	2	2				

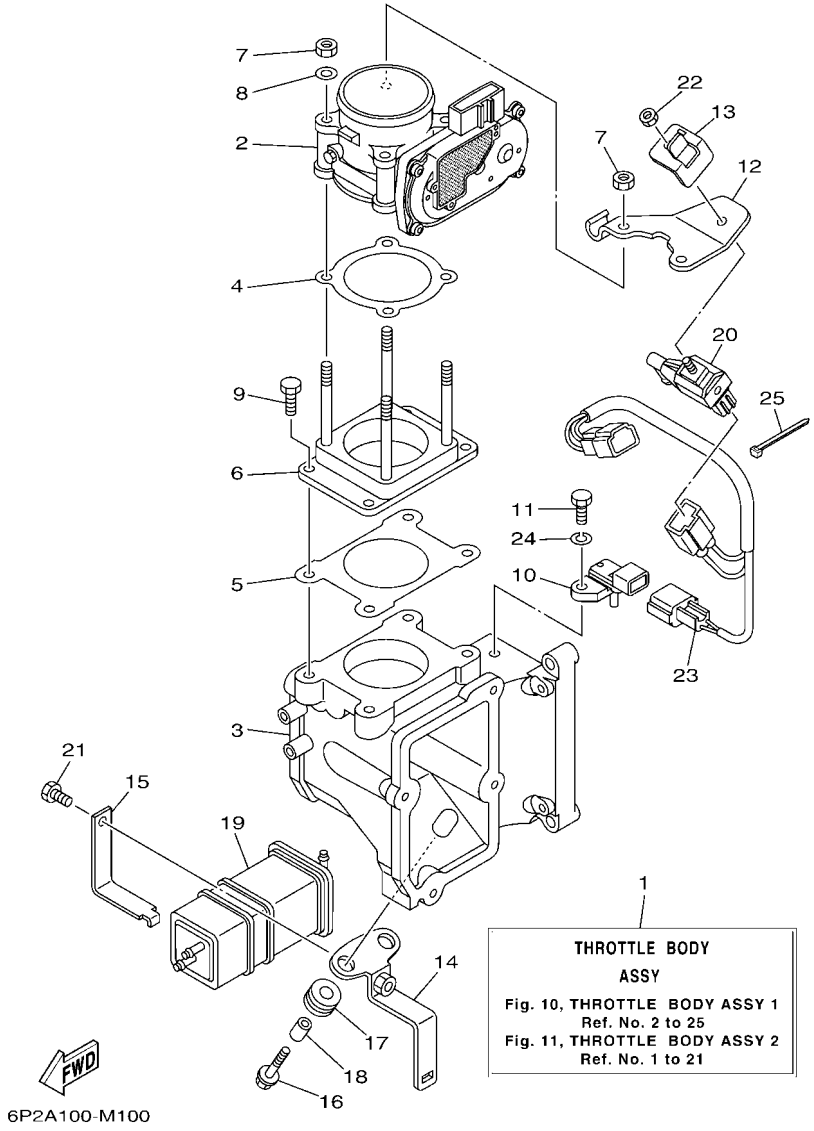

FIG. 10 THROTTLE BODY ASSY 1 — CAJA DE ACELERADOR COMPL 1

REF. NO.	PART NO. CODIGO Nº	DESCRIPTION DESCRIPCION	6FJ1	6FK1				REMARKS OBSERVACIONES
1	6P2–13750–10	THROTTLE BODY ASSY CAJA DE ACELERADOR COMPL.	1	1				
2	6P2–13751–01	BODY, THROTTLE 1 CAJA 1	1	1				
3	6P2–13711–00	MIXING BODY CUERPO DE MEZCLA	1	1				
4	6P2–13556–00	GASKET, MANIFOLD EMPAQUE	1	1				
5	6P2–13557–00	GASKET EMPAQUE	1	1				
6	6P2–14360–00	THROTTLE DAMPER ASSY AMORTIGUADOR ARRANQUE COMPL.	1	1				
7	6P2–13588–00	NUT TUERCA	4	4				
8	6P2–13578–00	WASHER ARANDELA	2	2				
9	6P2–14496–00	BOLT PERNO	4	4				
10	6P2–82380–00	SENSOR, PRESSURE SENSOR DE PRESION	1	1				
11	6P2–13573–00	BOLT 1 PERNO 1	1	1				
12	6P2–14255–00	PLATE PLACA	1	1				
13	6P2–14159–00	CLIP PRESILLA	1	1				
14	6P2–2134X–00	BRACKET, CANISTER SOPORTE	1	1				
15	6P2–2419A–00	HOLDER SOSTEN	1	1				
16	90119–06M59	BOLT, WITH WASHER TORNILLO CON ARANDELA	2	2				
17	90480–10M23	GROMMET TAPON	2	2				
18	90387–06289	COLLAR ESPACIADOR	2	2				
19	6P2–24170–00	CANISTER ASSY FRANJA DE DEPOSITO DE COMBUST.	1	1				
20	6C5–86120–00	SOLENOID VALVE ASSY VALVULA SOLENOIDE CONJ.	1	1				
21	6P2–13574–00	BOLT 2 PERNO 2	1	1				
22	69J–14164–00	NUT, HOLDING TUERCA DE SOSTEN	1	1				
23	6P2–8258A–00	EXTENSION, WIRE HARNESS EXTENSION, ARNES DE CABLES	1	1				
24	68V–14356–00	WASHER, SPRING ARANDELA DE RESORTE	1	1				
25	68V–2481H–00	CLAMP GRAMPA	1	1				

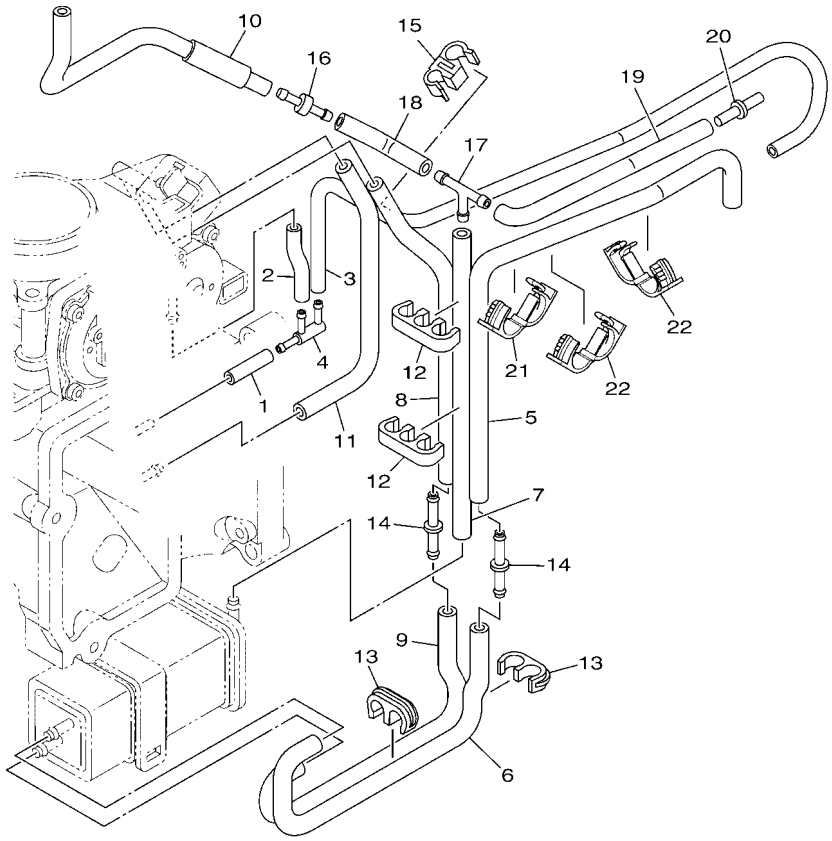

6P28110-L100

FIG. 11 THROTTLE BODY ASSY 2 — CAJA DE ACELERADOR COMPL 2

REF. NO.	PART NO. CODIGO Nº	DESCRIPTION DESCRIPCION	6FJ1	6FK1				REMARKS OBSERVACIONES
1	6P2–14349–00	PIPE TUBO	1	1				
2	6P2–13533–00	HOSE, VACUUM SENSING 4 MANGUERA, DE VACIO 4	1	1				
3	6P2–13532–10	HOSE, VACUUM SENSING 3 MANGUERA, DE VACIO 3	1	1				
4	6P2–13595–00	JOINT TOBERA	1	1				
5	6P2–1475A–10	PIPE 1 TUBO 1	1	1				
6	6P2–1475E–00	PIPE 2 TUBO 2	1	1				
7	6P2–13545–00	HOSE 1 SELLO	1	1				
8	6P2–1475F–00	PIPE 3 TUBO 3	1	1				
9	6P2–1475G–00	PIPE 4 TUBO 4	1	1				
10	6P2–13546–00	HOSE 2 SELLO	1	1				
11	6P2–2416A–00	HOSE TUBO DE COMBUSTIBLE	1	1				
12	6P2–24135–00	CLAMP 1 GRAMPA 1	2	2				
13	6P2–24136–00	CLAMP 2 GRAMPA 2	2	2				
14	6P2–13758–00	PIPE, JOINT TUBO DE JUNTA	2	2				
15	6P2–24137–00	CLAMP 3 GRAMPA 3	1	1				
16	6E5–21744–00	BREATHER RESPIRADERO	1	1				
17	688–24378–00	PIPE, JOINT 3 TUBO DE UNION 3	1	1				
18	6P2–13547–00	HOSE 3 SELLO	1	1				
19	6P2–13548–10	HOSE, AIR 4 TUBO DE AIRE 4	1	1				
20	6P2–24376–00	PIPE, JOINT 1 TUBO DE UNION 1	1	1				
21	90464–18004	CLAMP BRIDA	1	1				
22	90464–18004	CLAMP BRIDA	2	2				

FIG. 12 THROTTLE BODY ASSY 3 — CAJA DE ACELERADOR COMPL 3

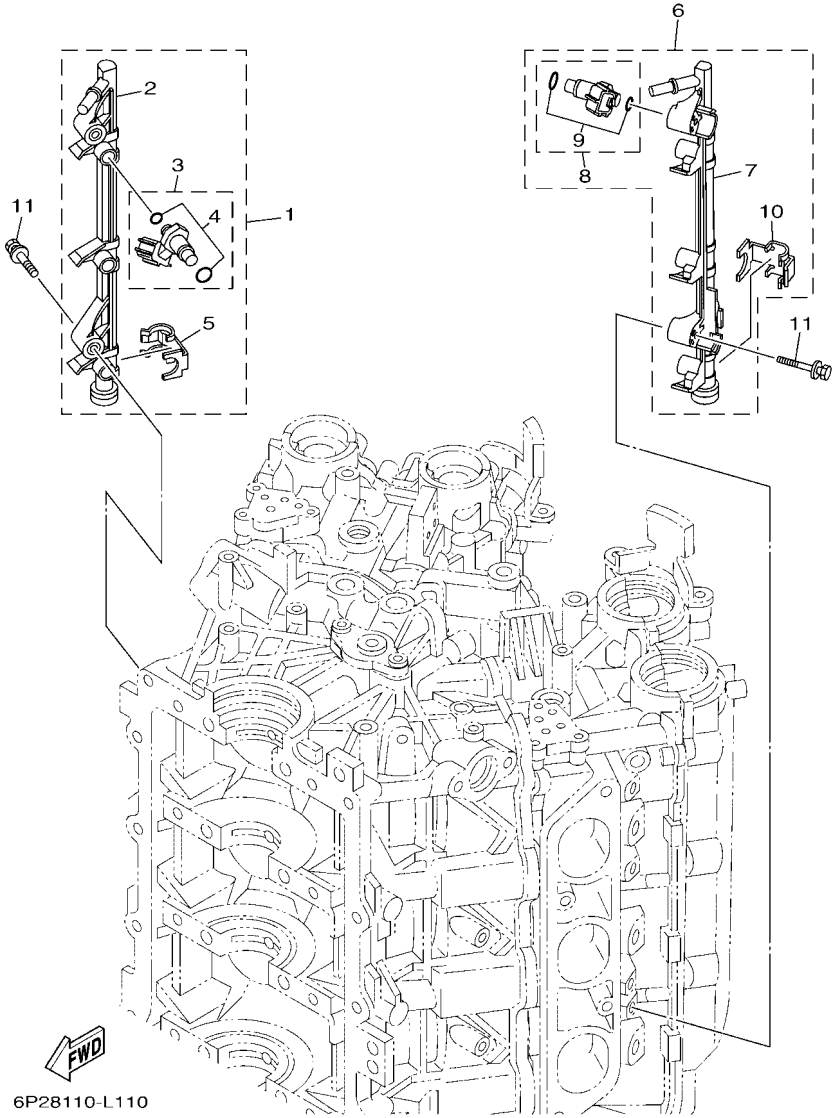

REF. NO.	PART NO. CODIGO Nº	DESCRIPTION DESCRIPCION	6FJ1	6FK1				REMARKS OBSERVACIONES
1	6P2–13160–11	DELIVERY PIPE ASSY 1 TUBO DE LLEGADA CONJUNTO 1	1	1				
2	6P2–13161–00	.PIPE, DELIVERY 1 .TUBO CONDUCTOR 1	1	1				
3	6P2–13761–11	.INJECTOR .INYECTOR	3	3				
4	6C5–1410B–00	..PACKING KIT ..JUEGO DE EMPAQUE	1	1				
5	6P2–13577–00	.CLIP .PRESILLA	3	3				
6	6P2–13170–11	DELIVERY PIPE ASSY 2 TUBO DE LLEGADA CONJUNTO 2	1	1				
7	6P2–13171–00	.PIPE, DELIVERY 2 .TUBO CONDUCTOR 2	1	1				
8	6P2–13761–11	.INJECTOR .INYECTOR	3	3				
9	6C5–1410B–00	..PACKING KIT ..JUEGO DE EMPAQUE	1	1				
10	6P2–13577–00	.CLIP .PRESILLA	3	3				
11	90119–06122	BOLT, WITH WASHER TORNILLO CON ARANDELA	4	4				

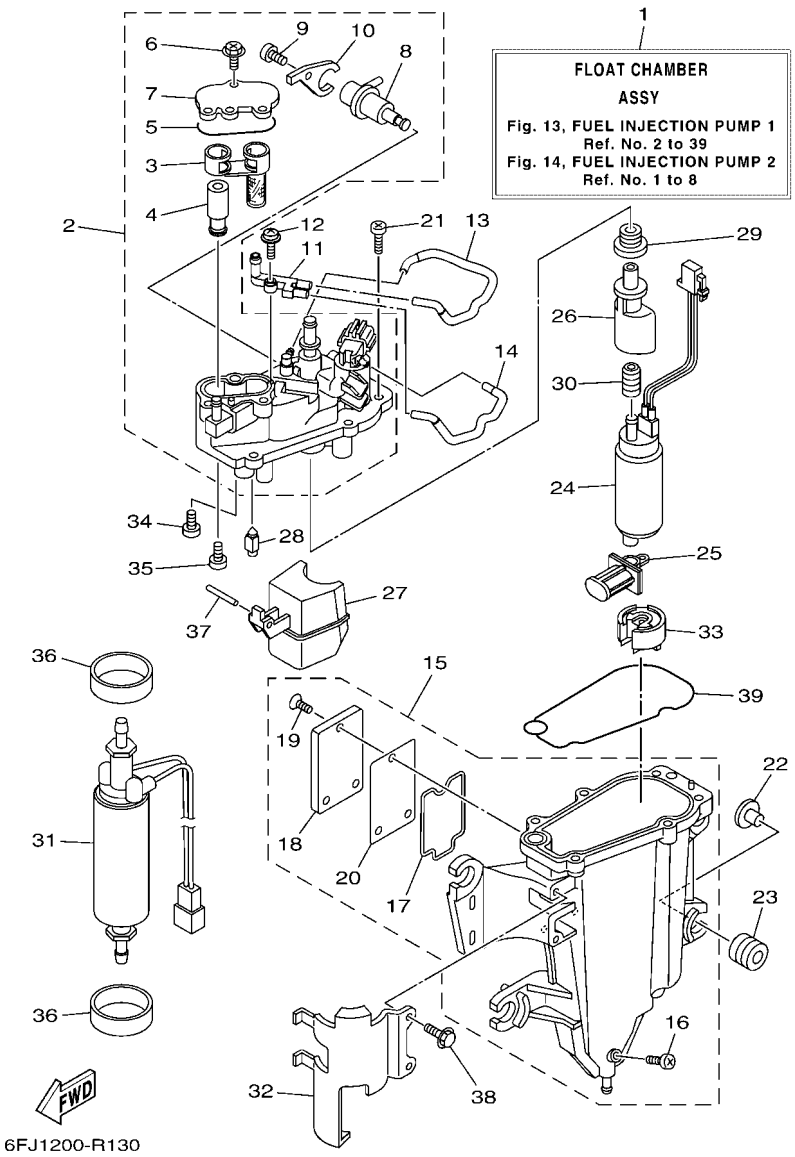

FIG. 13 FUEL INJECTION PUMP 1 — BOMBA DE INYECTOR 1

REF. NO.	PART NO. CODIGO Nº	DESCRIPTION DESCRIPCION	6FJ1	6FK1				REMARKS OBSERVACIONES
1	6P2–14180–51	FLOAT CHAMBER ASSY CAMARA DE BOIA COMPLETE	1	1				
2	6AW–14182–11	COVER, FLOAT CHAMBER TAPA DE CAMARA DE BOIA	1	1				
3	6CB–24501–01	.FILTER, FUEL .FIELTRO	1	1				
4	6CB–24460–00	.RELIEF VALVE ASSY .VALVELA DE DESCOMPRESION	1	1				
5	6CB–13016–00	.O-RING .ANILLO O	1	1				
6	6CB–14216–00	.SCREW .TORNILLO	3	3				
7	6CB–24217–00	.COVER .CUBIERTA	1	1				
8	6CB–13906–01	.REGULATOR, PRESSURE .REGULADOR	1	1				
9	6CB–14564–00	.SCREW .TORNILLO	1	1				
10	6CB–14146–00	.PLATE .PLACA SOPORTE	1	1				
11	68V–24379–10	PIPE, JOINT 4 TUBO DE UNION 4	1	1				
12	68V–14216–00	SCREW TORNILLO	1	1				
13	68V–1475H–00	PIPE 5 TUBO 5	1	1				
14	68V–1475J–00	PIPE 6 TUBO 6	1	1				
15	6AW–14181–11	BODY, FLOAT CHAMBER 1 CUERPO DE CAMARA DE BOIA	1	1				
16	6P2–14191–00	.PLUG, DRAIN .TORNILLO, DE DRENAJE	1	1				
17	6CB–14239–00	.SEAL .SELLO	1	1				
18	6CB–24452–10	.COVER .CUBIERTA	1	1				
19	6CB–14429–01	.SCREW .TORNILLO	3	3				
20	6CB–24482–00	.GASKET 1 .EMPAQUE 1	1	1				
21	63P–14567–00	SCREW TORNILLO	6	6				
22	63P–13716–00	COLLAR COLLAR	4	4				
23	6CB–13593–00	DAMPER COJINETE DE RODILLOS	4	4				
24	6P2–13907–20	FUEL PUMP COMP. BOMBA DE COMBUSTIBLE COMPLETA	1	1				
25	63P–13915–00	FILTER FILTRO	1	1				
26	6AW–13132–00	JOINT JUNTA	1	1				
27	6CB–14985–00	FLOAT BOIA	1	1				

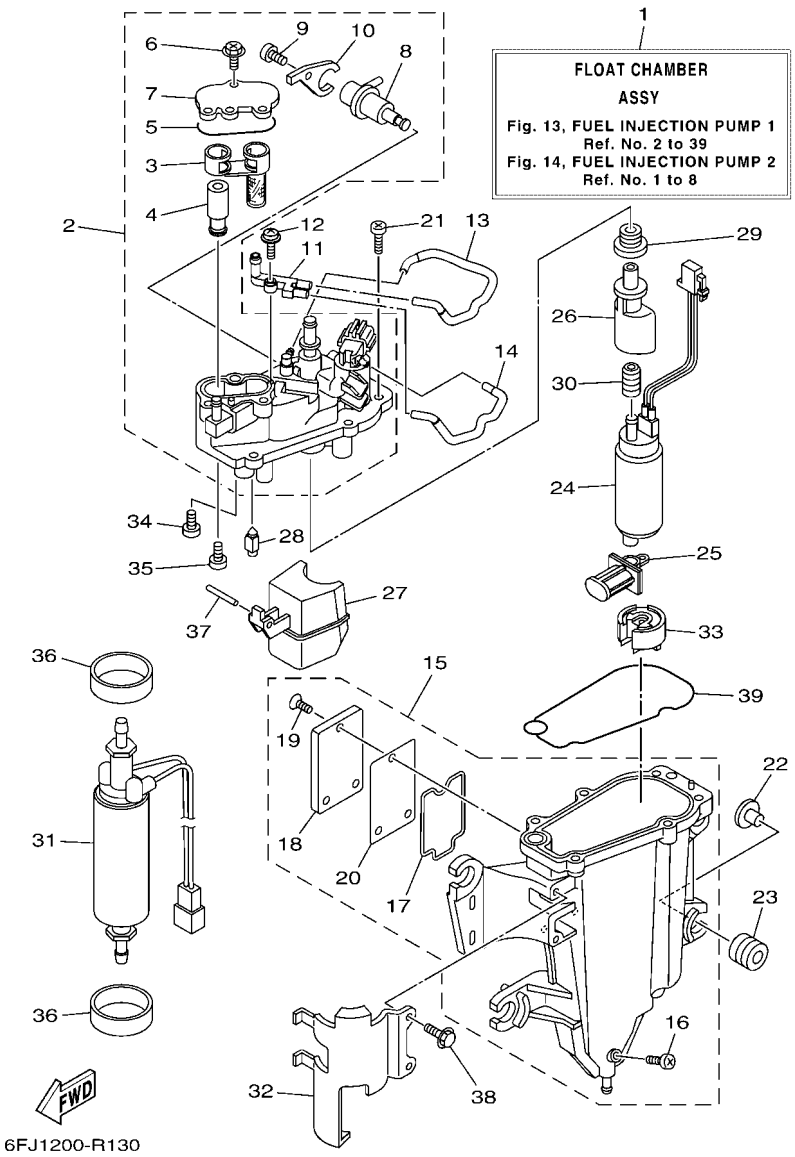

FIG. 13 FUEL INJECTION PUMP 1 — BOMBA DE INYECTOR 1

REF. NO.	PART NO. CODIGO Nº	DESCRIPTION DESCRIPCION	6FJ1	6FK1				REMARKS OBSERVACIONES
28	6CB–14546–00	VALVE, NEEDLE VALVULA DE AGUJA	1	1				
29	6CB–1447B–00	BUSH 1 BUJE 1	1	1				
30	6AW–13781–00	DAMPER, PUMP AMORTIGUADOR DE BOMBA	1	1				
31	6CB–24410–00	FUEL PUMP ASSY BOMBA DE COMBUSTIBLE COMPLETA	1	1				
32	6AW–24491–10	BRACKET, FUEL PUMP SOPORTE BOMBA COMBUSTIBLE	1	1				
33	6AW–13784–00	COVER, PUMP CUBIERTA DE BOMBA	1	1				
34	4SV–24453–00	SCREW TORNILLO	1	1				
35	98507–04008	SCREW, PAN HEAD TORNILLO DE CABEZA CON PLANA	1	1				
36	6CB–24492–00	BUSH, FUEL PUMP BUJE	2	2				
37	6P2–14386–00	PIN, FLOAT PASADOR DE BOIA	1	1				
38	6CB–24592–00	BOLT TORNILLO	2	2				
39	6CB–14984–00	GASKET, FLOAT CHAMBER EMPAQUE CAMARA DE BOIA	1	1				

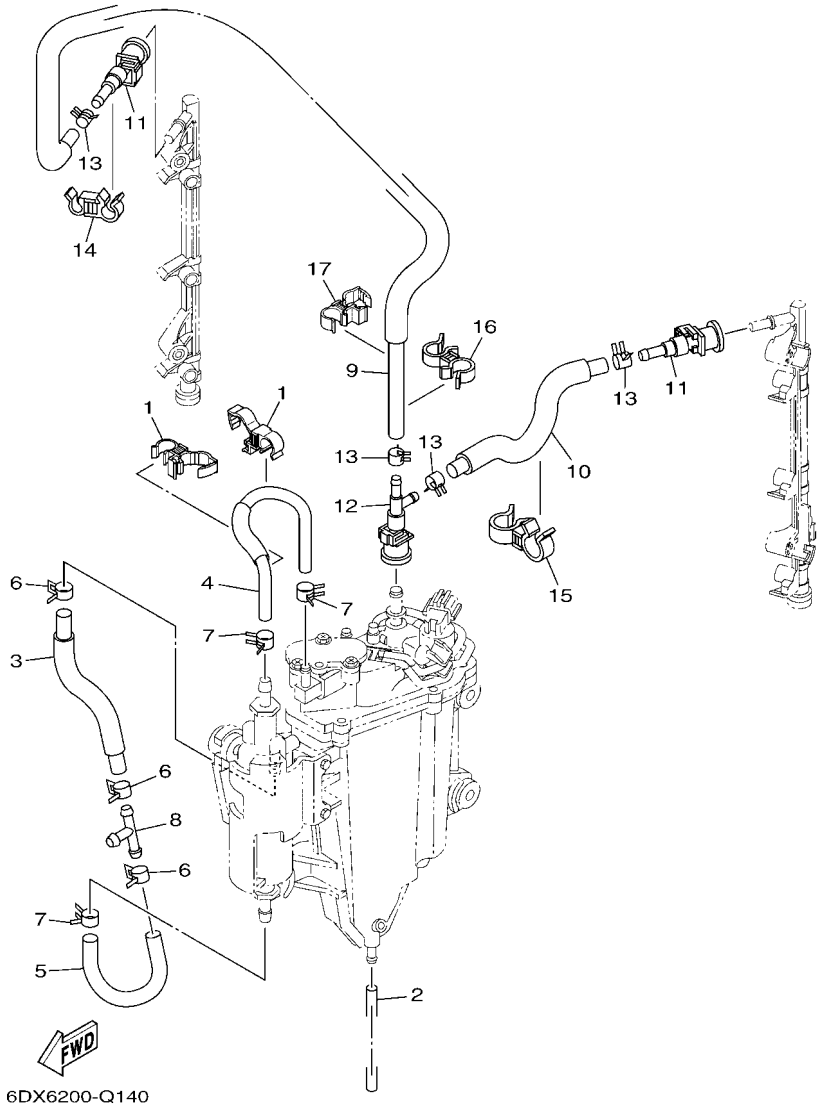

FIG. 14 FUEL INJECTION PUMP 2 — BOMBA DE INYECTOR 2

REF. NO.	PART NO. CODIGO Nº	DESCRIPTION DESCRIPCION	6FJ1	6FK1				REMARKS OBSERVACIONES
1	90464–12012	CLAMP BRIDA	2	2				
2	6P2–14149–00	PIPE TUBO	1	1				
3	6AW–24323–20	PIPE 12 TUBO 12	1	1				
4	6AW–24324–30	PIPE 13 TUBO 13	1	1				
5	6AW–24317–20	PIPE 7 TUBO 7	1	1				
6	69J–14137–00	CLIP PRESILLA	3	3				
7	68V–13577–00	CLIP PRESILLA	3	3				
8	6E5–24378–00	PIPE, JOINT 3 TUBO DE UNION 3	1	1				
9	6P2–13973–30	PIPE, FUEL 3 TUBO, COMBUSTIBLE 3	1	1				
10	6P2–13974–30	PIPE, FUEL 4 TUBO, COMBUSTIBLE 4	1	1				
11	6AW–24300–10	FUEL PIPE JOINT CONECTOR MANGUERA COMBUSTIBLE	2	2				
12	6P2–24300–00	FUEL PIPE JOINT CONECTOR MANGUERA COMBUSTIBLE	1	1				
13	68V–13577–00	CLIP PRESILLA	4	4				
14	90464–12010	CLAMP BRIDA	1	1				
15	90464–18005	CLAMP BRIDA	1	1				
16	90464–12009	CLAMP BRIDA	1	1				
17	90464–12012	CLAMP BRIDA	1	1				

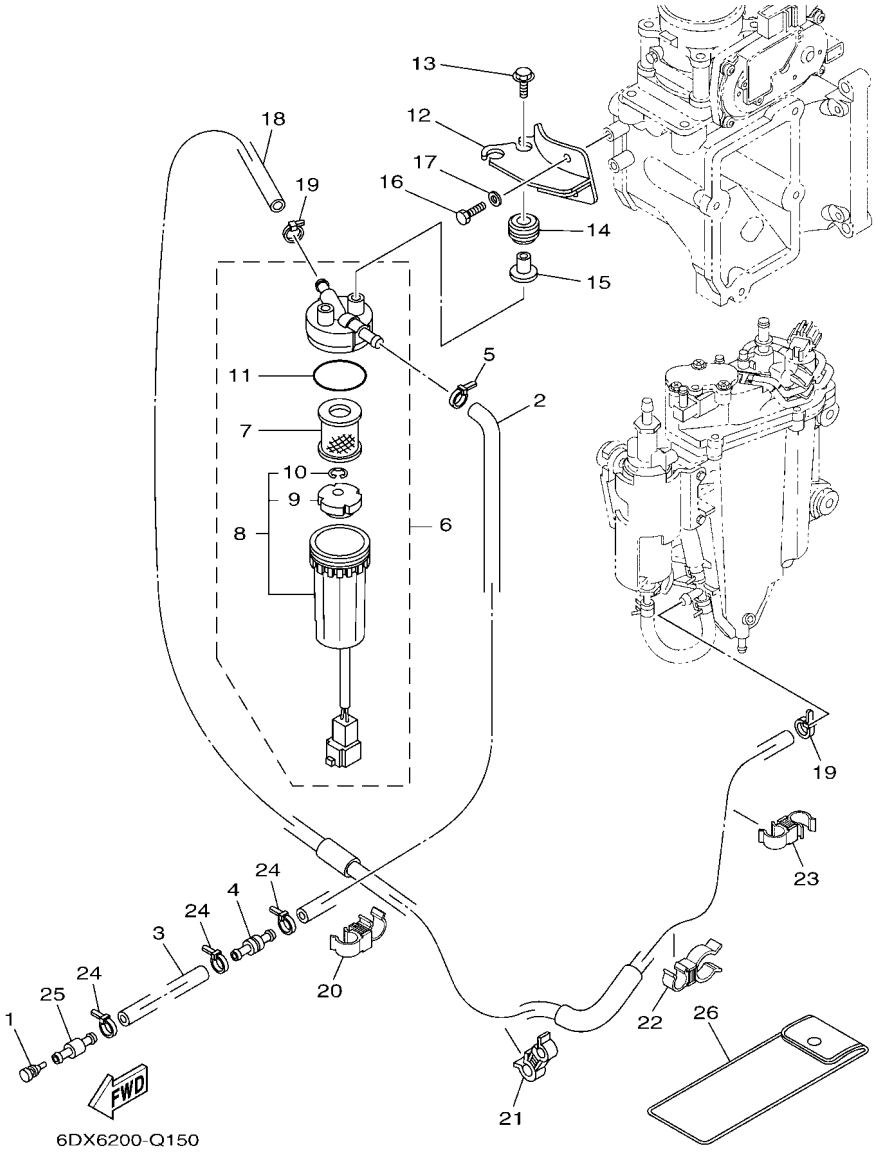

FIG. 15 FUEL 1 — COMBUSTIBLE 1

REF. NO.	PART NO. CODIGO Nº	DESCRIPTION DESCRIPCION	6FJ1	6FK1				REMARKS OBSERVACIONES
1	689–85547–00	DAMPER AMORTIGUADOR	1	1				
2	6P2–24314–00	PIPE 4 TUBO 4	1	1				
3	90445–13511	HOSE (L2000) TUBO (L2000)	1	1				
4	6R3–24377–10	PIPE, JOINT 2 TUBO DE UNION 2	1	1				
5	90465–11M10	CLAMP BRIDA	1	1				
6	6P3–24560–03	FILTER ASSY FILTRO COMPLETO	1	1				
7	6P3–24563–01	.ELEMENT, FILTER .ELEMENTO DEL FILTRO	1	1				
8	6P3–24562–03	.CUP, FILTER .COPA DE FILTRO	1	1				
9	6P3–24469–00	..FLOAT, WATER LEVEL ..BOIA	1	1				
10	6P3–24519–00	..CLIP ..PRESILLA	1	1				
11	6P3–24564–00	.GASKET .EMPAQUE	1	1				
12	6P2–24566–11	BRACKET, FILTER SOPORTE DEL FILTRO	1	1				
13	90119–06M17	BOLT, WITH WASHER TORNILLO CON ARANDELA	2	2				
14	90480–14018	GROMMET TAPON	2	2				
15	90387–06289	COLLAR ESPACIADOR	2	2				
16	97095–06014	BOLT PERNO	2	2				
17	92995–06600	WASHER ARANDELA	2	2				
18	6P2–24313–50	PIPE 3 TUBO 3	1	1				
19	90465–11M10	CLAMP BRIDA	2	2				
20	90464–12009	CLAMP BRIDA	1	1				
21	90464–12010	CLAMP BRIDA	1	1				
22	90464–20024	CLAMP BRIDA	1	1				
23	90464–12009	CLAMP BRIDA	1	1				
24	90465–11M10	CLAMP BRIDA	3	3				
25	6R3–24377–00	PIPE, JOINT 2 TUBO DE UNION 2	1	1				
26	67F–28100–10	TOOL KIT JUEGO DE HERRAMIENTAS	1	1				UR UR
	69J–28100–01	TOOL KIT JUEGO DE HERRAMIENTAS	1	1				UR UR

FIG. 16 FUEL 2 — COMBUSTIBLE 2

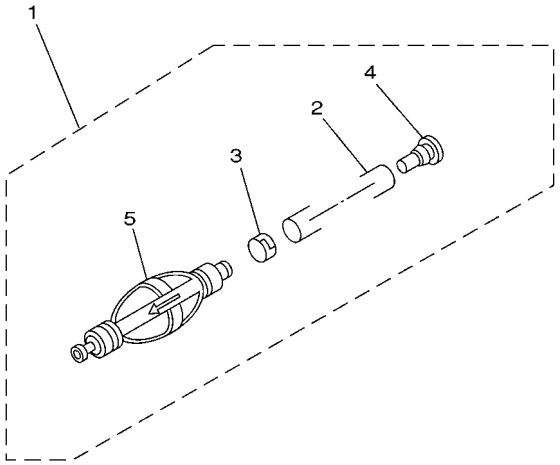

68V0100-0110

REF. NO.	PART NO. CODIGO Nº	DESCRIPTION DESCRIPCION	6FJ1	6FK1				REMARKS OBSERVACIONES
1	6Y2–24307–50	FUEL PIPE COMP. 2 MANGUERA COMPL,COMBUSTIBLE 2	1	1				AP AP
2	90445–13M01	.HOSE (L2050) .MANGUERA (L2050)	1	1				
3	6E5–24351–51	.BAND 1 .ABRAZADERA 1	1	1				
4	90480–06M19	.GROMMET .TAPON	1	1				
5	6Y2–24360–60	.PRIMER PUMP ASSY .SOPORTE BOMBA	1	1				

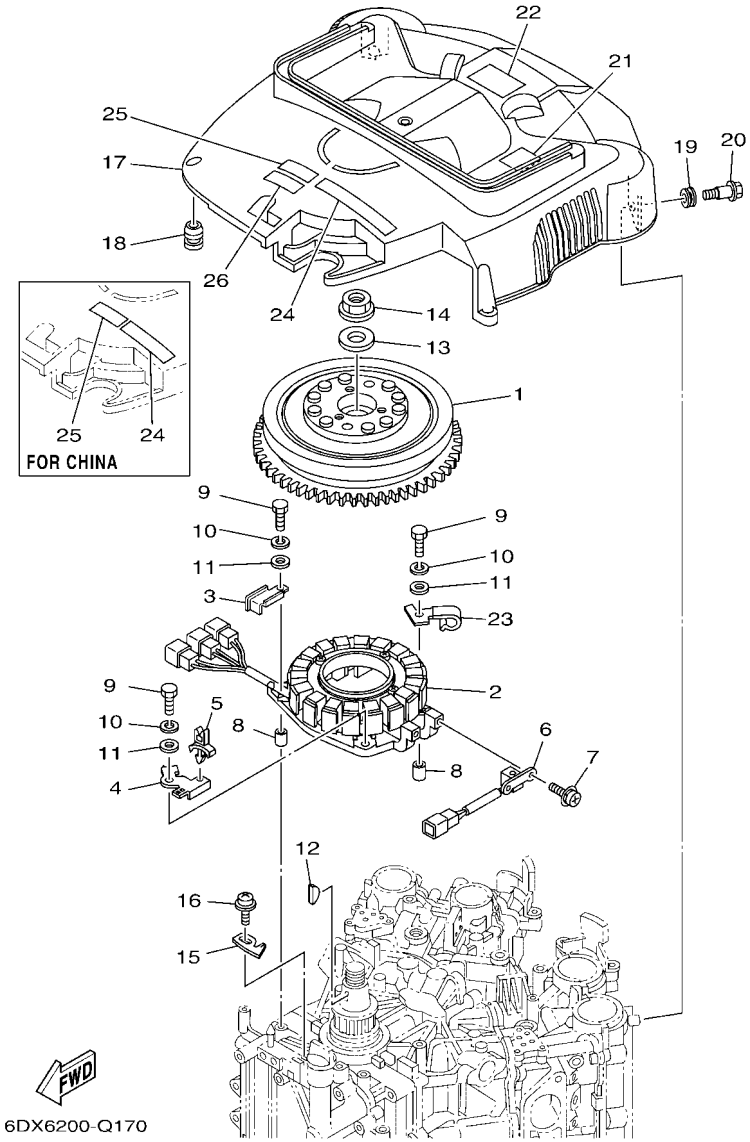

FIG. 17 GENERATOR — GENERADOR

REF. NO.	PART NO. CODIGO Nº	DESCRIPTION DESCRIPCION	6FJ1	6FK1				REMARKS OBSERVACIONES
1	6P2–81450–00	ROTOR ASSY ROTOR COMPLETO	1	1				
2	6P2–81460–00	BASE ASSY CONJUNTO BASE	1	1				
3	6P2–81443–00	CLAMP, LEAD 1 GRAMPA DE CABLE 1	1	1				
4	6P2–8257V–00	PLATE, CONNECTOR PLACA DE CONECTOR	1	1				
5	90464–06001	CLAMP BRIDA	1	1				
6	6P2–85580–00	COIL, PULSER BOBINA DE PULSACION	1	1				
7	97980–05312	SCREW, WITH WASHER TORNILLO, CON ARANDELA	2	2				
8	99530–08012	PIN, DOWEL PASADOR, DE ESPIGA	2	2				
9	97095–06035	BOLT PERNO	4	4				
10	92995–06100	WASHER, SPRING ARANDELA	4	4				
11	92995–06600	WASHER ARANDELA	4	4				
12	90280–05015	KEY, WOODRUFF CUNA WOODRUFF	1	1				
13	90201–24014	WASHER, PLATE ARANDELA PLANA	1	1				
14	90179–24002	NUT TUERCA	1	1				
15	6P2–81332–00	PLATE, TIMING PLACA REGULADOR DE TIEMPO	1	1				
16	97985–06210	SCREW, WITH WASHER TORNILLO, CON ARANDELA	1	1				
17	6P2–81337–02	COVER, FLYWHEEL CUBIERTA DE VOLANTE	1	1				
18	663–82317–01	DAMPER, IGNITION COIL AMORTIGUADOR BOBINA ENCENDIDO	4	4				
19	90480–12314	GROMMET TAPON	2	2				
20	90109–06MA1	BOLT PERNO	2	2				
21	6P2–81919–60	GRAPHIC, REGULATOR CALCAMONIA DE REGULADOR	1	1				
22	6P2–81919–70	GRAPHIC, REGULATOR CALCAMONIA DE REGULADOR	1	1				
23	6P2–81128–00	CLAMP GRAMPA	1	1				
24	60L–13437–42	MARK, CAUTION MARKER	1					FOR CHN FOR CHN
	60L–13437–63	MARK, CAUTION MARKER	1	1				EXCEPT FOR CHN EXCEPT FOR CHN
25	6EE–81994–40	LABEL, SAFETY ETIQUETA DE SEGURIDAD	1	1				
26	6EE–81994–50	LABEL, SAFETY ETIQUETA DE SEGURIDAD	1	1				FOR CAR FOR CAR

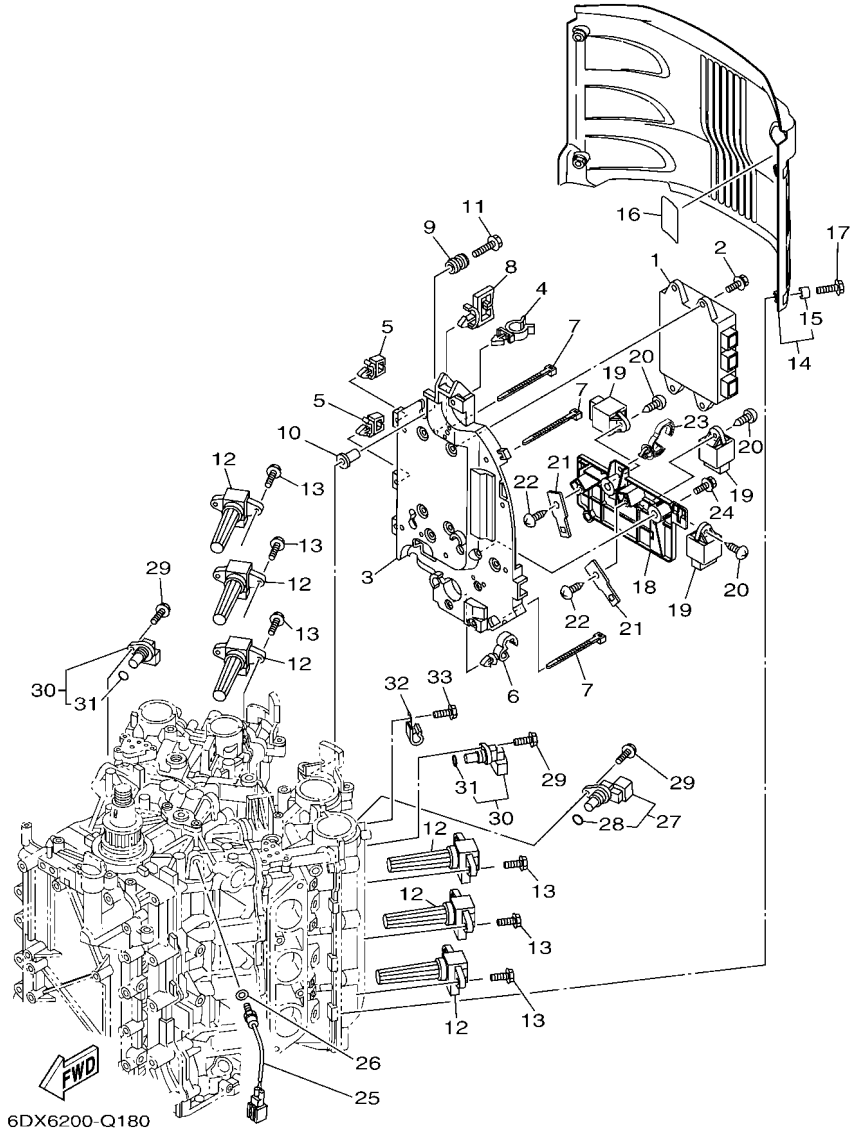

FIG. 18 ELECTRICAL 1 — EQUIPO ELECTRICO 1

REF. NO.	PART NO. CODIGO Nº	DESCRIPTION DESCRIPCION	6FJ1	6FK1				REMARKS OBSERVACIONES
1	6DX–8591A–11	ENGINE CONTROL UNIT ASSY UNIDAD CONTROL	1	1				
2	97595–06520	BOLT, WITH WASHER PERNO CON ARANDELA	4	4				
3	6P2–82316–00	BRACKET, IGNITION COIL SOPORTE BOBINA ENCENDIDO	1	1				
4	90464–19M45	CLAMP BRIDA	1	1				
5	90464–11121	CLAMP BRIDA	2	2				
6	90464–13249	CLAMP BRIDA	1	1				
7	90465–14M66	CLAMP BRIDA	3	3				
8	90464–23199	CLAMP BRIDA	1	1				
9	6A0–82317–00	DAMPER, IGNITION COIL AMORTIGUADOR BOBINA ENCENDIDO	4	4				
10	90387–06119	COLLAR ESPACIADOR	4	4				
11	90119–06M59	BOLT, WITH WASHER TORNILLO CON ARANDELA	4	4				
12	6P2–82310–01	IGNITION COIL ASSY BOBINA DE ENCENDIDO COMPLETA	6	6				
13	97595–06520	BOLT, WITH WASHER PERNO CON ARANDELA	12	12				
14	6P2–82314–10	COVER, IGNITION COIL CUBIERTA BOBINA ENCENDIDO	1	1				
15	90387–06044	.COLLAR .ESPACIADOR	4	4				
16	6P2–42735–00	PROTECTOR SEGURO RONDANA	1	1				
17	90119–06M92	BOLT, WITH WASHER TORNILLO CON ARANDELA	4	4				
18	6P2–81952–00	HOLDER, RELAY SOSTEN DE RELE	1	1				
19	68V–81950–00	RELAY ASSY RELE COMPLETO	5	5				
20	97780–60620	SCREW, TAPPING TORNILLO DE CABEZA DE CONO ACH	5	5				
21	6P2–83635–00	BRACKET SOPORTE	2	2				
22	97780–60620	SCREW, TAPPING TORNILLO DE CABEZA DE CONO ACH	2	2				
23	90464–13249	CLAMP BRIDA	1	1				
24	97595–06520	BOLT, WITH WASHER PERNO CON ARANDELA	3	3				
25	61A–85790–00	THERMOSENSOR ASSY TERMICA SENSORIO	1	1				
26	92990–10600	WASHER, PLATE ARANDELA PLANA	1	1				
27	6P2–85896–00	SENSOR, CAM POSITION SENSOR DE LEVA	1	1				

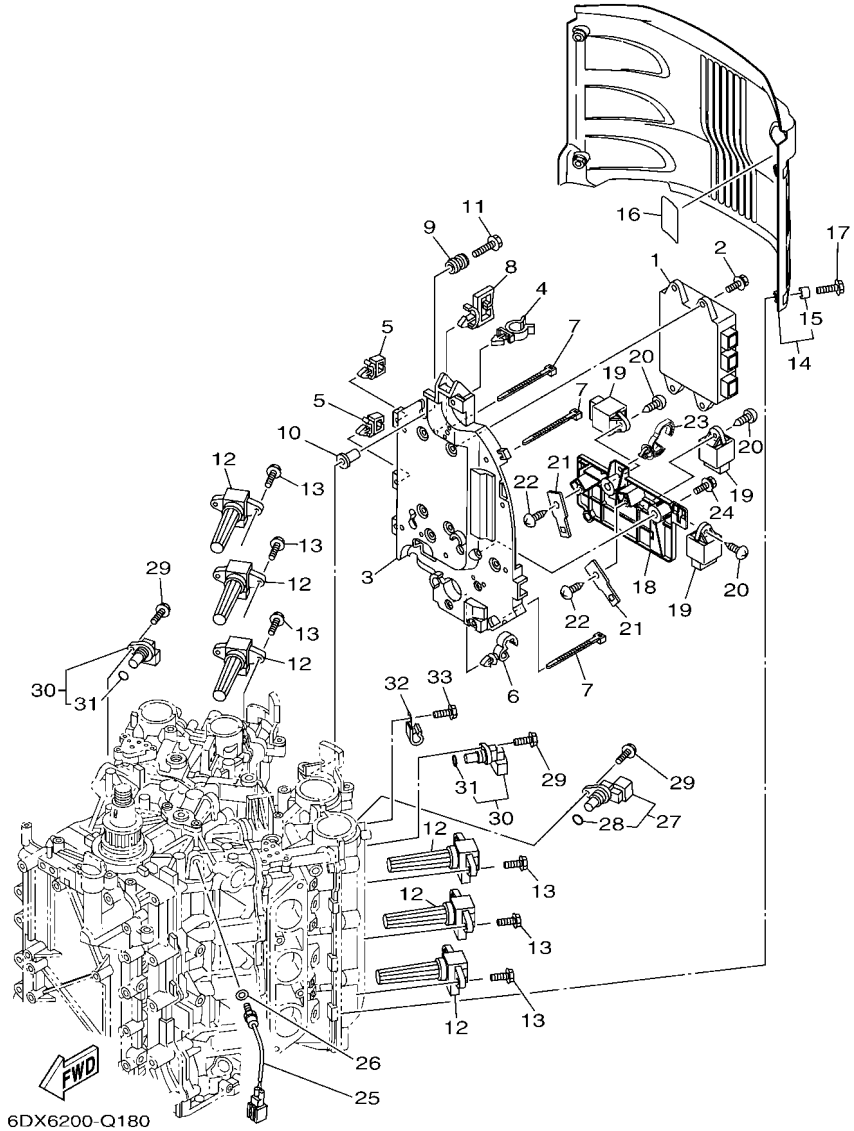

FIG. 18 ELECTRICAL 1 — EQUIPO ELECTRICO 1

REF. NO.	PART NO. CODIGO Nº	DESCRIPTION DESCRIPCION	6FJ1	6FK1				REMARKS OBSERVACIONES
28	6P2–85075–00	.O-RING .ANILLO-O	1	1				
29	97595–06520	BOLT, WITH WASHER PERNO CON ARANDELA	3	3				
30	6P2–85897–00	SENSOR, CAM POSITION 2 SENSOR DE LEVA 2	2	2				
31	6P2–85075–00	.O-RING .ANILLO-O	1	1				
32	90462–08032	CLAMP BRIDA	1	1				
33	97595–06512	BOLT, WITH WASHER PERNO CON ARANDELA	1	1				

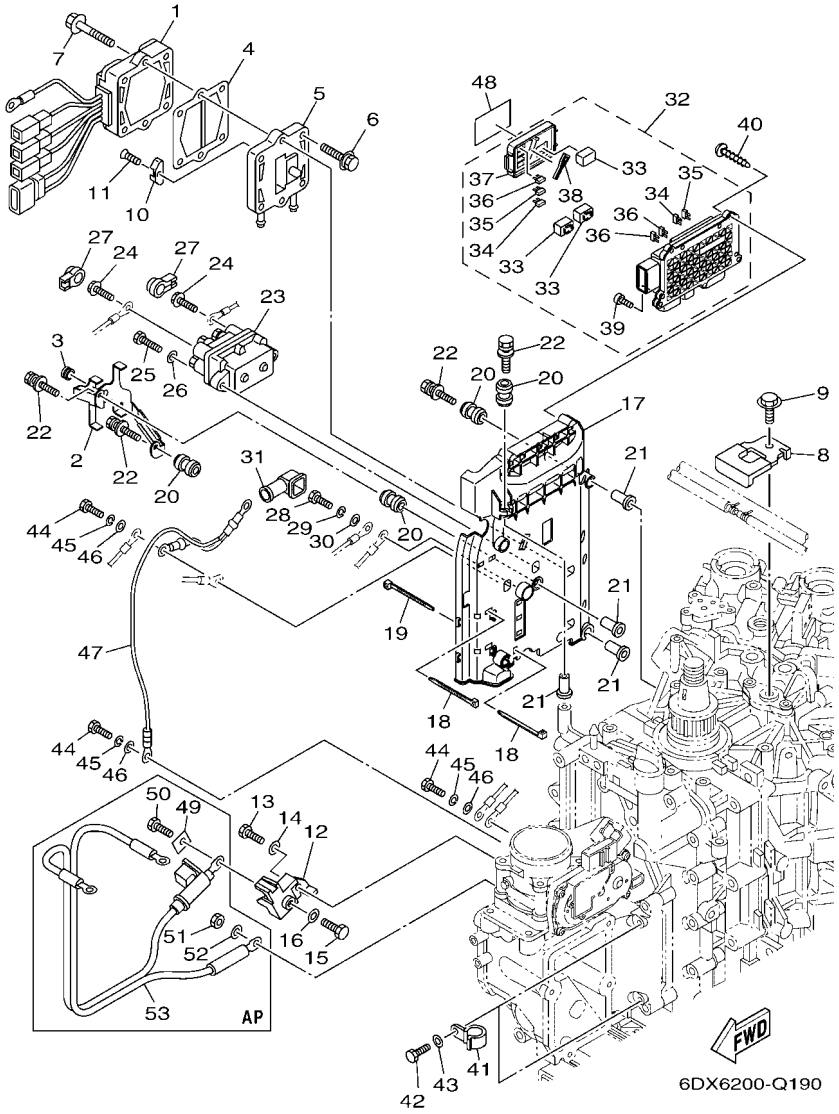

FIG. 19 ELECTRICAL 2 — EQUIPO ELECTRICO 2

REF. NO.	PART NO. CODIGO Nº	DESCRIPTION DESCRIPCION	6FJ1	6FK1				REMARKS OBSERVACIONES
1	6P2–81960–11	RECTIFIER & REGULATOR ASSY RECTIFICADOR Y REGULADOR	1	1				
2	6P2–81614–10	PROTECTOR PROTECTOR	1	1				
3	2D1–14737–00	DAMPER, MUFFLER AMORTIGUADOR DE SILENCIADOR	1	1				
4	60V–81975–A0	PLATE, RECTIFIER FITTING PLACA ACCESORIA RECTIF.	1	1				
5	6P2–81972–00–9S	COVER, RECTIFIER CUBIERTA DE RECTIFICADOR	1	1				
6	90119–06MA3	BOLT, WITH WASHER TORNILLO CON ARANDELA	4	4				
7	90119–06MA5	BOLT, WITH WASHER TORNILLO CON ARANDELA	2	2				
8	6P2–12491–00	CLAMP 1 GRAMPA 1	1	1				
9	97595–06512	BOLT, WITH WASHER PERNO CON ARANDELA	1	1				
10	6E5–11325–00	ANODE ANODO	1	1				
11	98780–04015	SCREW, FLAT HEAD TORNILLO CABEZA PLANA	1	1				
12	6P2–81925–01	TERMINAL TERMINAL	1	1				
13	97095–08020	BOLT PERNO	1	1				
14	92995–08600	WASHER ARANDELA	1	1				
15	97095–08016	BOLT PERNO	1	1				
16	92995–08600	WASHER ARANDELA	1	1				
17	6P2–81948–10	BRACKET SOPORTE	1	1				
18	90465–13M18	CLAMP BRIDA	4	4				
19	90465–14M66	CLAMP BRIDA	2	2				
20	6A0–82317–00	DAMPER, IGNITION COIL AMORTIGUADOR BOBINA ENCENDIDO	6	6				
21	90387–06119	COLLAR ESPACIADOR	6	6				
22	90119–06M95	BOLT, WITH WASHER TORNILLO CON ARANDELA	6	6				
23	63P–81950–00	RELAY ASSY RELE COMPLETO	1	1				
24	97595–06610	BOLT, WITH WASHER PERNO CON ARANDELA	2	2				
25	97013–06025	BOLT PERNO	2	2				
26	92903–06600	WASHER, PLATE RONDANA SENCILLA	2	2				
27	6P2–8183X–00	CAP, TERMINAL CUBIERTA DE TERMINAL	2	2				

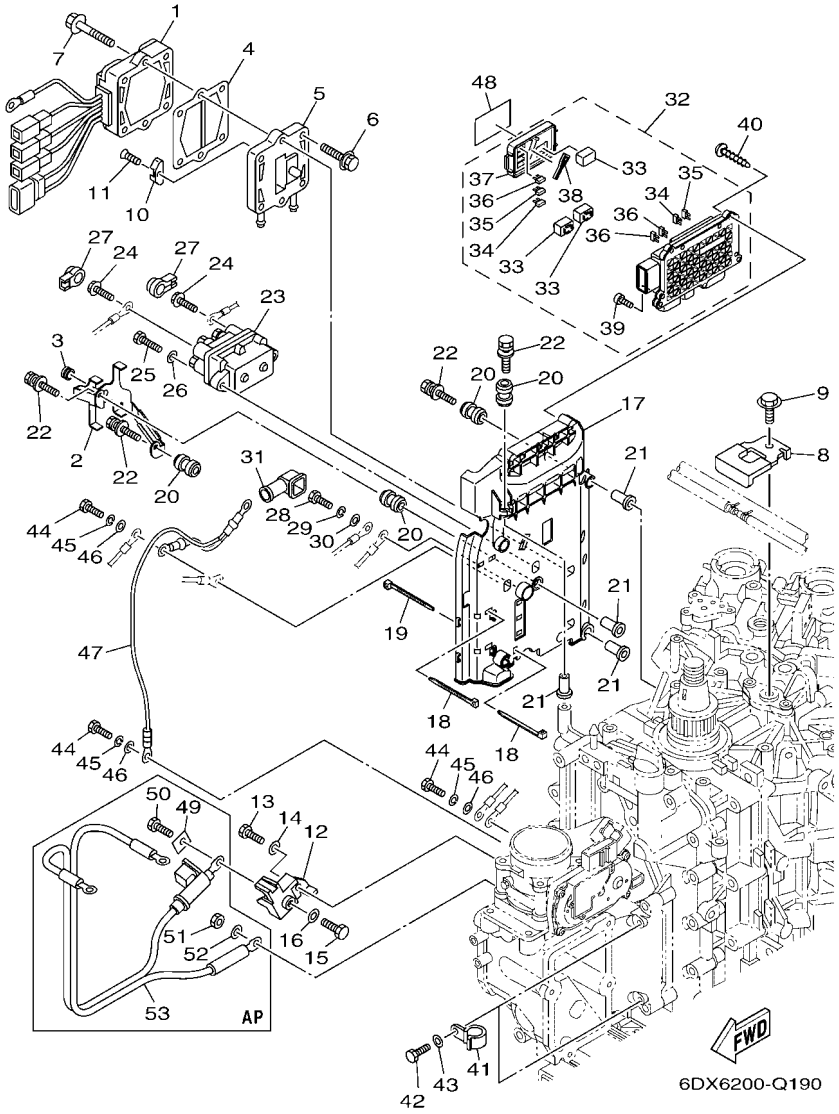

FIG. 19 ELECTRICAL 2 — EQUIPO ELECTRICO 2

REF. NO.	PART NO. CODIGO Nº	DESCRIPTION DESCRIPCION	6FJ1	6FK1				REMARKS OBSERVACIONES
28	97095–06016	BOLT PERNO	1	1				
29	92995–06100	WASHER, SPRING ARANDELA	1	1				
30	92995–06600	WASHER ARANDELA	1	1				
31	6P2–82119–00	COVER, LEAD WIRE CUBIERTA DE CABLE CONDUCTOR	1	1				
32	6P2–82170–20	FUSE BOX ASSY CAJA DE FUSIBLES COMPL.	1	1				
33	6CB–82151–40	.FUSE (60A) .FUSIBLE (60A)	3	3				
34	6CB–82151–00	.FUSE (10A) .FUSIBLE (10A)	2	2				
35	6CB–82151–20	.FUSE (20A) .FUSIBLE (20A)	2	2				
36	6CB–82151–30	.FUSE (30A) .FUSIBLE (30A)	3	3				
37	6CB–85544–10	.COVER .CUBIERTA	1	1				
38	6CB–2812A–00	.PULLER, FUSE .TIRADOR DE FUSIBLE	1	1				
39	6P2–82113–00	.SCREW (M3) .TORNILLO (M3)	5	5				
40	97780–50620	SCREW, TAPPING TORNILLO DE CABEZA DE CONO ACH	4	4				
41	90462–08026	CLAMP BRIDA	2	2				
42	97095–06016	BOLT PERNO	2	2				
43	92995–06600	WASHER ARANDELA	2	2				
44	97095–06016	BOLT PERNO	3	3				
45	92995–06100	WASHER, SPRING ARANDELA	3	3				
46	92995–06600	WASHER ARANDELA	3	3				
47	6P2–8259M–10	WIRE HARNESS ASSY 2 ARNES DE CABLES	1	1				
48	6P2–81919–50	GRAPHIC, REGULATOR CALCAMONIA DE REGULADOR	1	1				
49	6P2–81923–00	WASHER ARANDELA	1	1				AP AP
50	97095–08016	BOLT PERNO	1	1				AP AP
51	95333–08600	NUT TUERCA	1	1				AP AP
52	92903–08100	WASHER, SPRING RONDANA SENCILLA	1	1				AP AP
53	6P2–82105–02	BATTERY CABLE CABLE DE BATERIA	1	1				AP AP

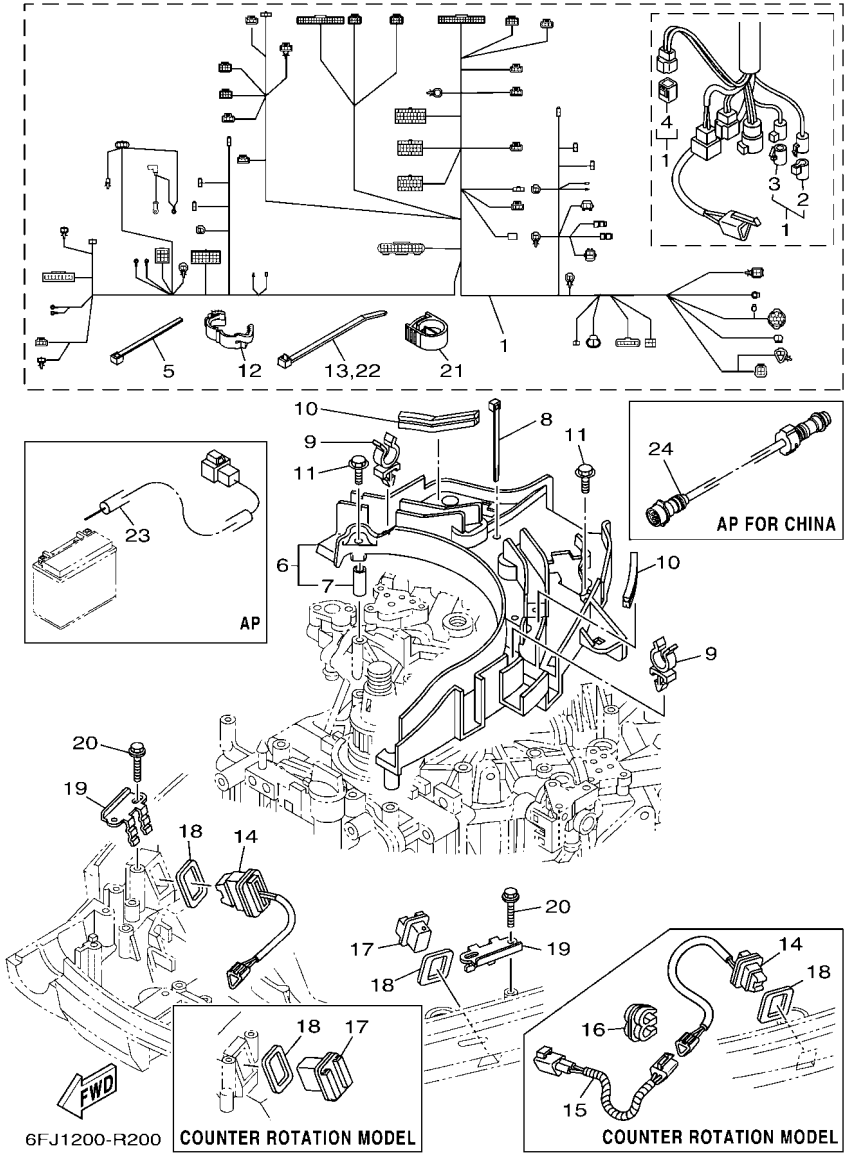

FIG. 20 ELECTRICAL 3 — EQUIPO ELECTRICO 3

REF. NO.	PART NO. CODIGO Nº	DESCRIPTION DESCRIPCION	6FJ1	6FK1				REMARKS OBSERVACIONES
1	6P2–82590–61	WIRE HARNESS ASSY CONJUNTO DE CABLES	1	1				
2	6DA–82582–00	.CAP 1 (FEMALE) .TAPA 1	1	1				
3	6DA–82582–10	.CAP 1 (MALE) .TAPA 1	1	1				
4	6Y8–82582–11	.CAP 1 (4PIN) .CUBIERTA DE ARNES DE CABLE	1	1				
5	90465–14M66	CLAMP BRIDA	3	3				
6	6P2–82589–10	PROTECTER, WIRE HARNESS PROTECTOR DE ARNES DE CABLE	1	1				
7	90387–06M26	.COLLAR .ESPACIADOR	5	5				
8	90465–14M66	CLAMP BRIDA	2	2				
9	90464–19M45	CLAMP BRIDA	4	4				
10	6P2–85722–00	INSULATOR AISLANTE	2	2				
11	97595–06535	BOLT, WITH WASHER PERNO CON ARANDELA	5	5				
12	90464–14010	CLAMP BRIDA	1	1				
13	90465–13M18	CLAMP BRIDA	3	3				
14	69J–82563–01	TRIM & TILT SWITCH ASSY INTERRUPTOR DE INCLINACION	1	1				
15	6P3–82553–00	EXTENSION, WIRE LEAD CABLE		1				
16	90464–10M57	CLAMP BRIDA		1				
17	69J–42723–01	COVER, BOTTOM CUBIERTA INFERIOR	1	1				
18	69J–82587–00	GASKET EMPAQUETADURA	2	2				
19	69J–83614–10	BRACKET SOPORTE	2	2				
20	90109–06M86	BOLT PERNO	4	4				
21	90464–18004	CLAMP BRIDA	5	5				
22	90465–13M18	CLAMP BRIDA	1	1				
23	69J–81949–02	WIRE, LEAD (ISOLATOR, 3.8M) CABLE CONDUCTOR, 3.8M	1	1				AP AP
24	688–8258A–30	EXTENSION, WIRE HARNESS (3M) EXTENSION, ARNES DE CABLES (3M	1					AP FOR CHN (10P) AP FOR CHN (10P)

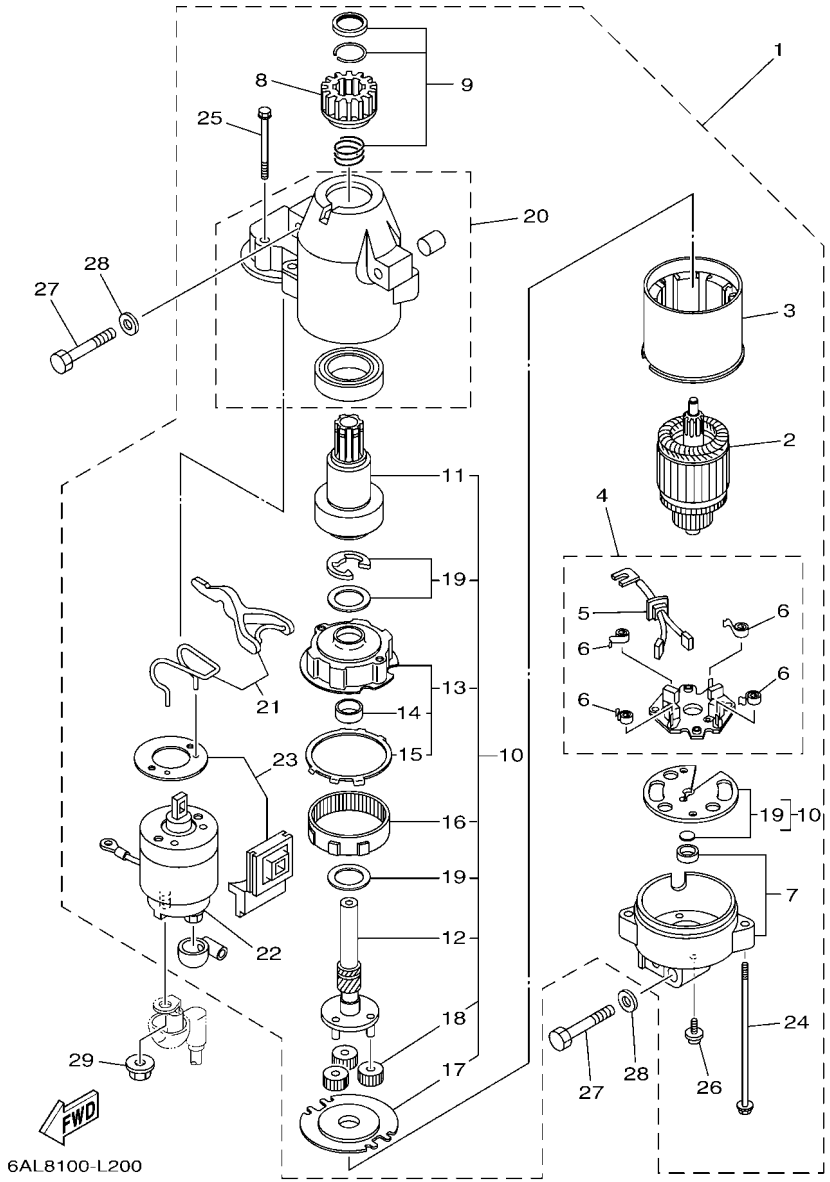

FIG. 21 STARTING MOTOR — MOTOR DE ARRANQUE

REF. NO.	PART NO. CODIGO Nº	DESCRIPTION DESCRIPCION	6FJ1	6FK1				REMARKS OBSERVACIONES
1	6BR–81800–01	STARTING MOTOR ASSY MOTOR DE ARRANQUE COMPLETO	1	1				
2	67F–81850–00	.ARMATURE ASSY .INDUCIDO COMPLETO	1	1				
3	67F–81810–00	.STATOR ASSY .ESTATOR COMPLETO	1	1				
4	69J–81840–00	.BRUSH HOLDER ASSY .SOSTEN DE ESCOBILLA COMPLETO	1	1				
5	69J–81801–00	..BRUSH SET ..JUEGO DE ESCOBILLA	1	1				
6	67F–81813–00	..SPRING, BRUSH ..RESORTE DE ESCOBILLA	4	4				
7	67F–81820–00	.REAR BRACKET ASSY .CUBIERTA TRASERA COMPL	1	1				
8	67F–81808–00	.PINION ASSY .PINON	1	1				
9	67F–81857–00	.PINION STOPPER SET .JUEGO TAPON PINON	1	1				
10	67F–81807–00	.GEAR ASSY, STARTING MOTOR .PINON CONJUNTO	1	1				
11	67F–81832–00	..CLUTCH, OVER RUN ..PINON COMPL	1	1				
12	67F–81836–00	..SHAFT, PINION ..ARBOL, PINON	1	1				
13	67F–81821–00	..BRACKET, CENTER 1 ..SOPORTE, CENTRO 1	1	1				
14	67F–81841–00	...BEARING ...PORTADOR	1	1				
15	67F–8183R–00	...GASKET ...EMPAQUETADURA	1	1				
16	67F–81891–00	..GEAR, RING ..ENGRANAJE ANILLO	1	1				WITH 67F-8183R-00 WITH 67F-8183R-00
17	67F–81830–00	..BRACKET, CENTER 2 ..SOPORTE, CENTRO 2	1	1				
18	60V–8183T–00	..GEAR, IDLER ..ENGRENAJE NEUTRO	3	3				
19	67F–81809–00	..WASHER KIT ..JUEGO DE ARANDELA	1	1				
20	69J–81842–00	.COVER .TAPA	1	1				
21	6C5–81839–00	.LEVER ASSY .PALANCA COMPL.	1	1				
22	63P–81941–00	.STARTER RELAY ASSY .RELE DE ARRANQUE	1	1				
23	6C5–81869–00	.COVER, DUST .CUBIERTA PARA POLVO	1	1				
24	6K7–81826–11	.BOLT .PERNO	2	2				
25	69J–81828–00	.SCREW 2 .TORNILLO DE EMPUJE 2	2	2				
26	67F–81846–00	.SCREW .TORNILLO	2	2				
27	97013–08045	BOLT PERNO	3	3				

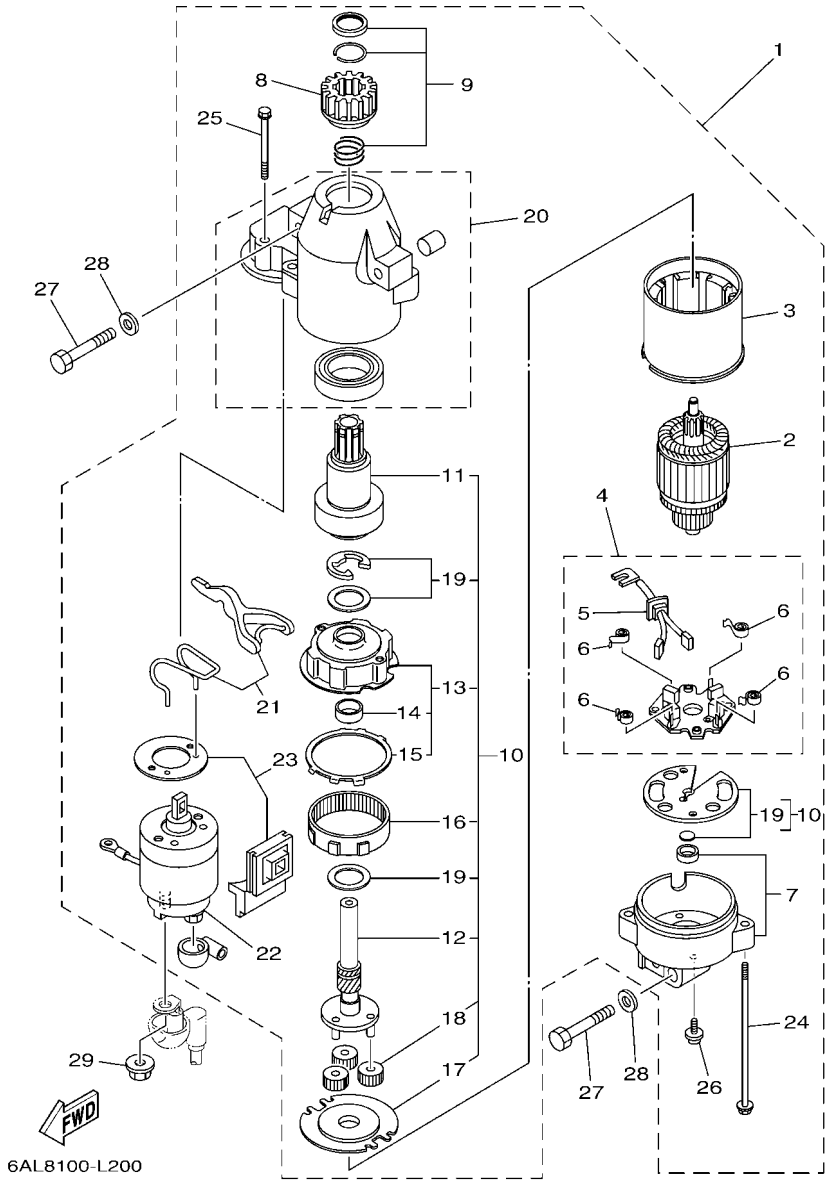

FIG. 21 STARTING MOTOR — MOTOR DE ARRANQUE

REF. NO.	PART NO. CODIGO Nº	DESCRIPTION DESCRIPCION	6FJ1	6FK1				REMARKS OBSERVACIONES
28	92903–08600	WASHER, PLATE RONDANA SENCILLA	3	3				
29	90179–08003	NUT TUERCA	1	1				

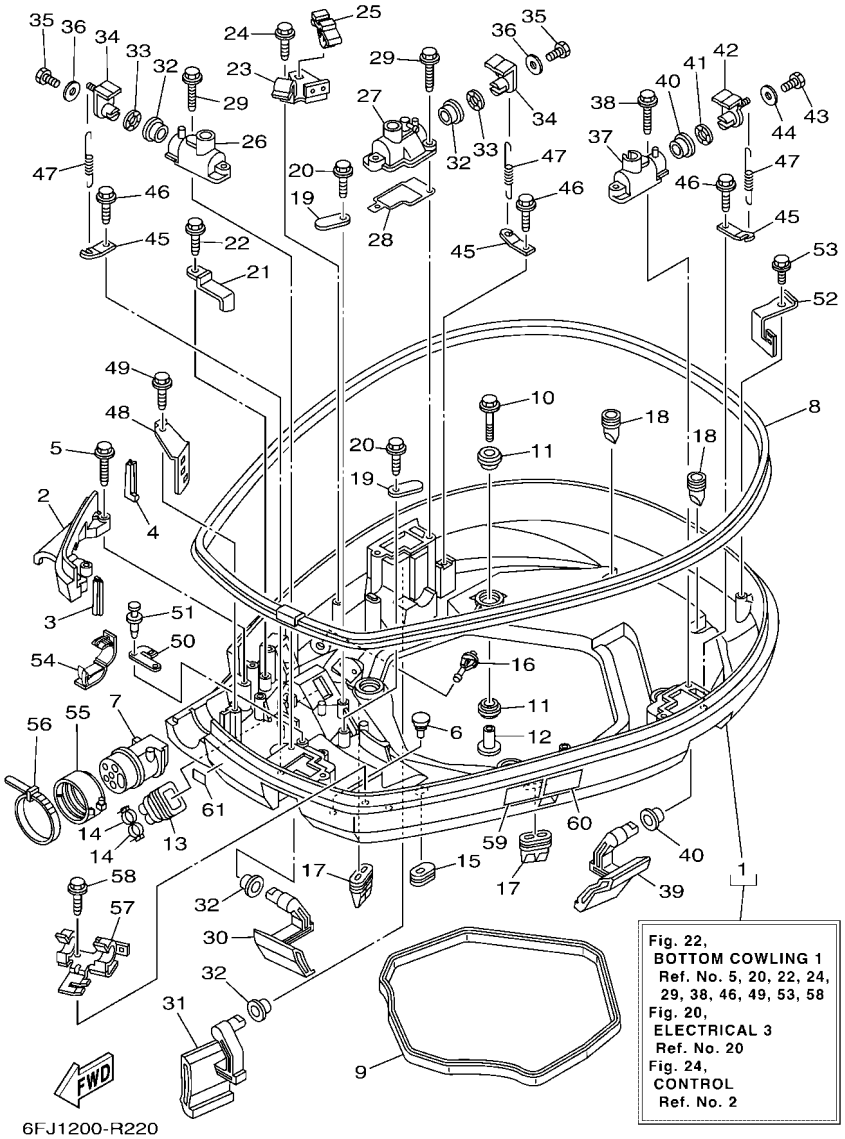

FIG. 22 BOTTOM COWLING 1 — CUBIERTA INFERIOR 1

REF. NO.	PART NO. CODIGO Nº	DESCRIPTION DESCRIPCION	6FJ1	6FK1				REMARKS OBSERVACIONES
1	6P2–42710–00–8D	BOTTOM COWLING ASSY CUBIERTA INFERIOR COMPL.	1	1				
2	6P2–42738–00–8D	PLATE, FITTING PLACA DE AJUSTE	1	1				
3	6P2–42717–00	RUBBER, SEAL 2 GOMA	1	1				
4	6P2–42718–00	RUBBER, SEAL 3 GOMA	1	1				
5	90109–06M82	BOLT PERNO	2	2				
6	6H4–42748–00	GROMMET TAPON	2	2				
7	6P2–42725–00	GROMMET TAPON	1	1				
8	6P2–42615–00	SEAL SELLO	1	1				
9	69J–42716–00	RUBBER SEAL 1 SELLO DE GOMA 1	1	1				
10	90119–08M22	BOLT, WITH WASHER TORNILLO CON ARANDELA	4	4				
11	90480–22M81	GROMMET TAPON	8	8				
12	90387–08M37	COLLAR ESPACIADOR	4	4				
13	6H1–42726–21	GROMMET TAPON	1	1				
14	90465–11M10	CLAMP BRIDA	2	2				
15	61A–42727–00	GROMMET TAPON	1	1				
16	6P2–44391–00	NIPPLE, HOSE NIPLE MANGUERA	1	1				
17	69J–42717–00	RUBBER, SEAL 2 GOMA	2	2				
18	61A–42717–00	RUBBER, SEAL 2 GOMA	2	2				
19	6E5–82588–00	PLATE PLACA	2	2				
20	90109–06M81	BOLT PERNO	2	2				
21	90462–20001	CLAMP BRIDA	1	1				
22	90109–06M86	BOLT PERNO	1	1				
23	6P2–82554–00	STAY, NEUTRAL SWITCH SOPORTE INTERRUPTOR DE NEUTRAL	1	1				
24	90109–06M86	BOLT PERNO	1	1				
25	90464–09M47	CLAMP BRIDA	1	1				
26	69J–42828–02–9S	PLATE, CLAMP PLACA, GRAMPA	1	1				
27	6P2–42828–00–9S	PLATE, CLAMP PLACA, GRAMPA	1	1				

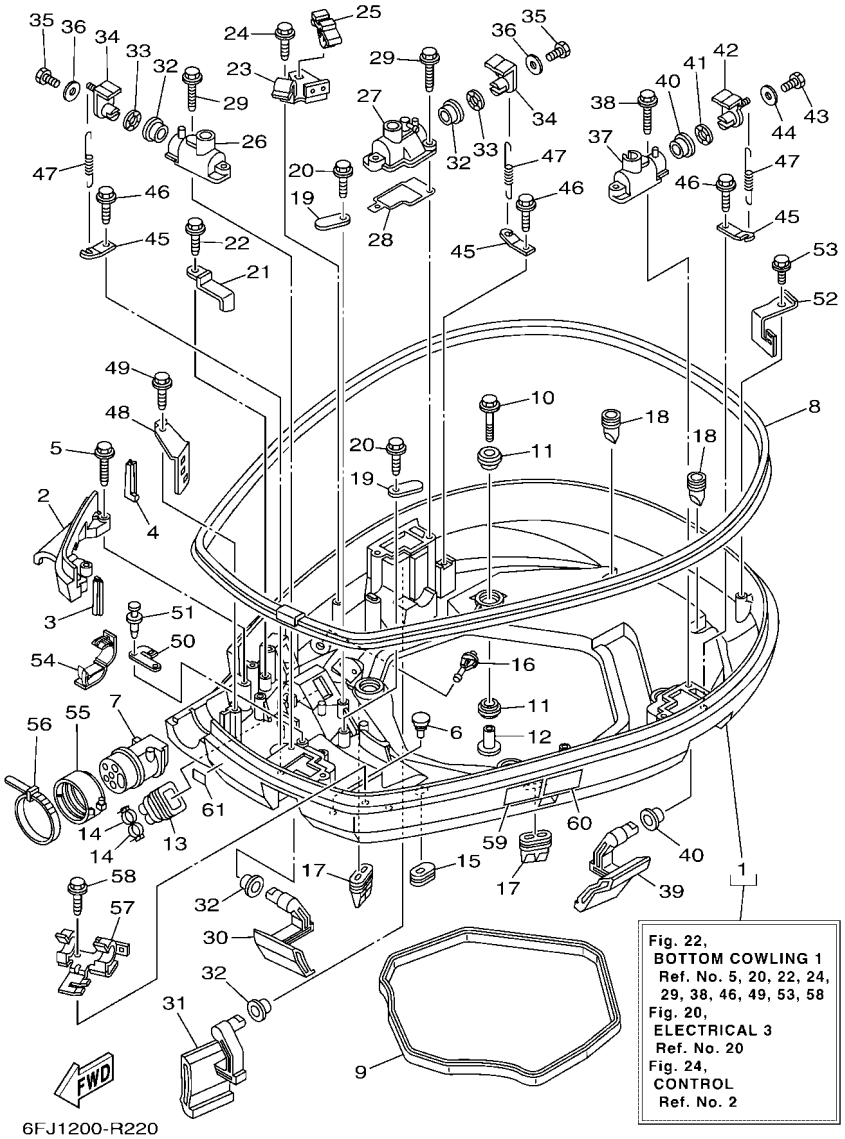

FIG. 22 BOTTOM COWLING 1 — CUBIERTA INFERIOR 1

REF. NO.	PART NO. CODIGO Nº	DESCRIPTION DESCRIPCION	6FJ1	6FK1				REMARKS OBSERVACIONES
28	6P2–42722–00	GASKET 2 JUNTA 2	1	1				
29	90109–06M82	BOLT PERNO	4	4				
30	69J–42815–00–8D	LEVER, CLAMP 1 PALANCA ABRAZADERA 1	1	1				
31	69J–42817–00–8D	LEVER, CLAMP 3 PALANCA ABRAZADERA 3	1	1				
32	90386–15M73	BUSH BUJE	4	4				
33	90206–15M18	WASHER, WAVE ARANDELA ONDULADA	2	2				
34	63P–42818–01	LEVER, CLAMP 4 PALANCA, ABRAZADERA 4	2	2				
35	97095–06020	BOLT PERNO	2	2				
36	90201–06068	WASHER, PLATE ARANDELA PLANA	2	2				
37	68F–42828–11–9S	PLATE, CLAMP PLACA, GRAMPA	1	1				
38	90109–06M82	BOLT PERNO	2	2				
39	69J–42816–00–8D	LEVER, CLAMP 2 PALANCA ABRAZADERA 2	1	1				
40	90386–15M73	BUSH BUJE	2	2				
41	90206–15M18	WASHER, WAVE ARANDELA ONDULADA	1	1				
42	68V–42818–01	LEVER, CLAMP 4 PALANCA, ABRAZADERA 4	1	1				
43	97095–06020	BOLT PERNO	1	1				
44	90201–06068	WASHER, PLATE ARANDELA PLANA	1	1				
45	64D–43144–00	HOOK, SPRING GANCHO	3	3				
46	90109–06M86	BOLT PERNO	3	3				
47	90506–18M40	SPRING, TENSION RESORTE DE TENSION	3	3				
48	6P2–42743–00	BRACKET SOPORTE	1	1				
49	90109–06M82	BOLT PERNO	1	1				
50	6P2–42766–20	BRACKET 2 SOPORTE 2	1	1				
51	90269–05005	RIVET REMACHE	2	2				
52	69J–8366G–02	BRACKET 3 SOPORTE 3	1	1				
53	90109–06M86	BOLT PERNO	1	1				
54	90464–18004	CLAMP BRIDA	2	2				

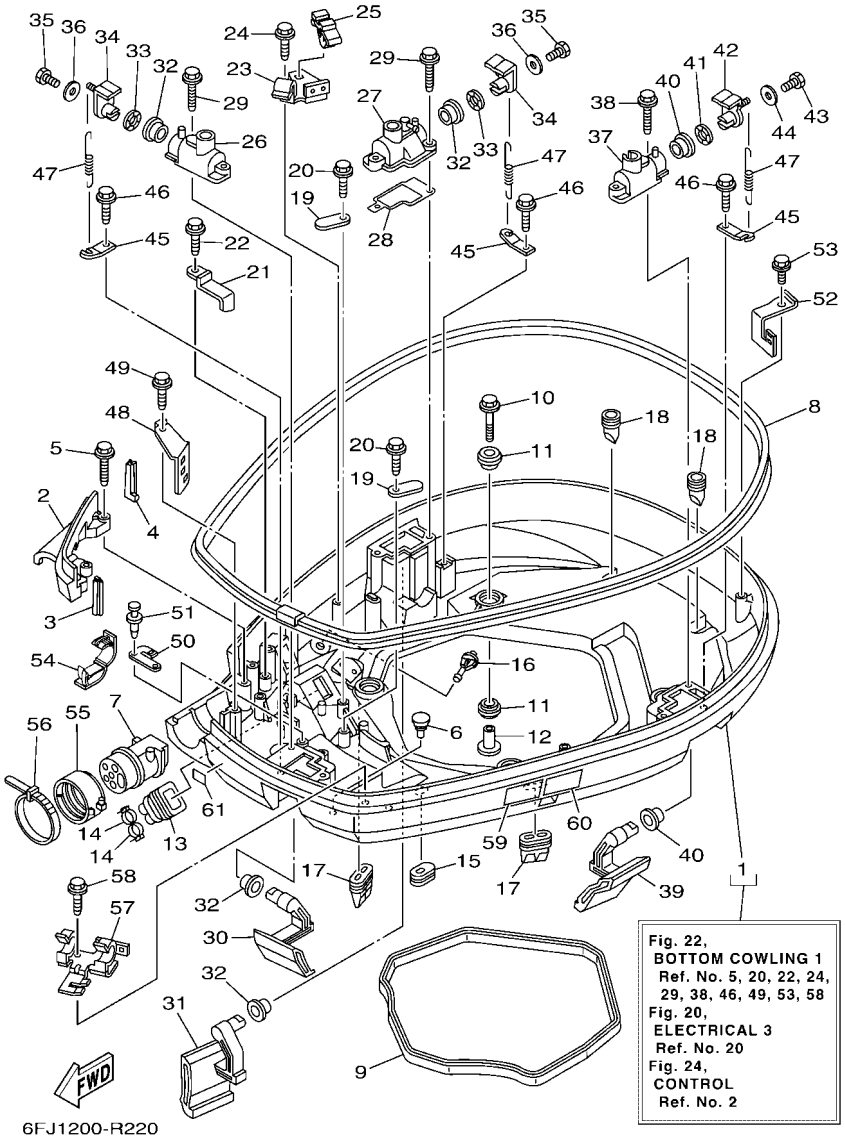

FIG. 22 BOTTOM COWLING 1 — CUBIERTA INFERIOR 1

REF. NO.	PART NO. CODIGO Nº	DESCRIPTION DESCRIPCION	6FJ1	6FK1				REMARKS OBSERVACIONES
55	68F–42753–00	FASTNER TIRADOR	1	1				AP AP
56	90464–20258	CLAMP BRIDA	1	1				AP AP
57	6P2–82594–00	CLAMP GRAMPA	1	1				
58	90109–06M86	BOLT PERNO	1	1				
59	6EE–42794–40	LABEL, WARNING (GENERAL) ETIQUETA DE PRECAUCION	1	1				
60	6EE–42794–50	LABEL, WARNING (GENERAL) ETIQUETA DE PRECAUCION	1	1				FOR CAR FOR CAR
61	6AH–81996–00	MARK MARCA	1	1				FOR CAR FOR CAR

FIG. 23 BOTTOM COWLING 2 — CUBIERTA INFERIOR 2

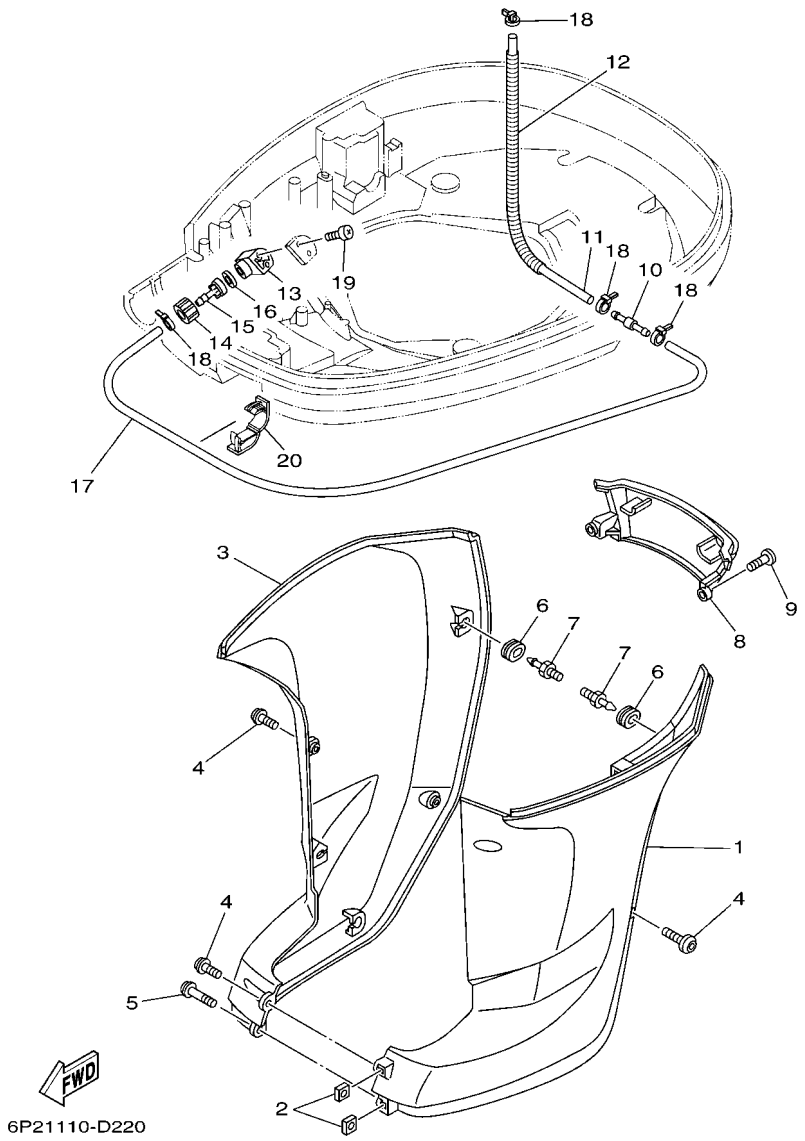

REF. NO.	PART NO. CODIGO Nº	DESCRIPTION DESCRIPCION	6FJ1	6FK1				REMARKS OBSERVACIONES
1	69J–42741–00–8D	APRON MANDIL	1	1				
2	90173–06001	NUT, SQUARE TUERCA CUADRADA	2	2				
3	69J–42771–00–8D	APRON MANDIL	1	1				
4	90111–06144	BOLT,HEX. SOCKET BUTTON TORNILLO	5	5				
5	90111–06142	BOLT,HEX. SOCKET BUTTON TORNILLO	1	1				
6	90480–14M17	GROMMET TAPON	6	6				
7	69J–42774–10	STAY, APRON 1 BUJEDEL PIVOTE DE LA FLECHA	6	6				
8	69J–45151–00–8D	COVER, UPPER CASING CUBIERTA FUNDA SUPERIOR	1	1				
9	90111–06144	BOLT,HEX. SOCKET BUTTON TORNILLO	2	2				
10	6E5–24379–00	PIPE, JOINT 4 TUBO DE UNION 4	1	1				
11	90445–11M47	HOSE (L370) TUBO (L370)	1	1				
12	90447–13009	TUBE TUBO	1	1				
13	6DR–12572–00	ADAPTER ADAPTADOR	1	1				
14	6R3–12581–00	JOINT, HOSE 1 CONEXION	1	1				
15	6R3–12582–00	JOINT, HOSE 2 CONEXION	1	1				
16	6R3–12583–00	GASKET, HOSE JOINT EMPAQUETADURA JUNTA DE MANGUE	1	1				
17	90445–11028	HOSE (L1050) TUBO (L1050)	1	1				
18	90465–11M10	CLAMP BRIDA	4	4				
19	97780–60520	SCREW, TAPPING TORNILLO DE CABEZA DE CONO ACH	2	2				
20	90464–18004	CLAMP BRIDA	1	1				

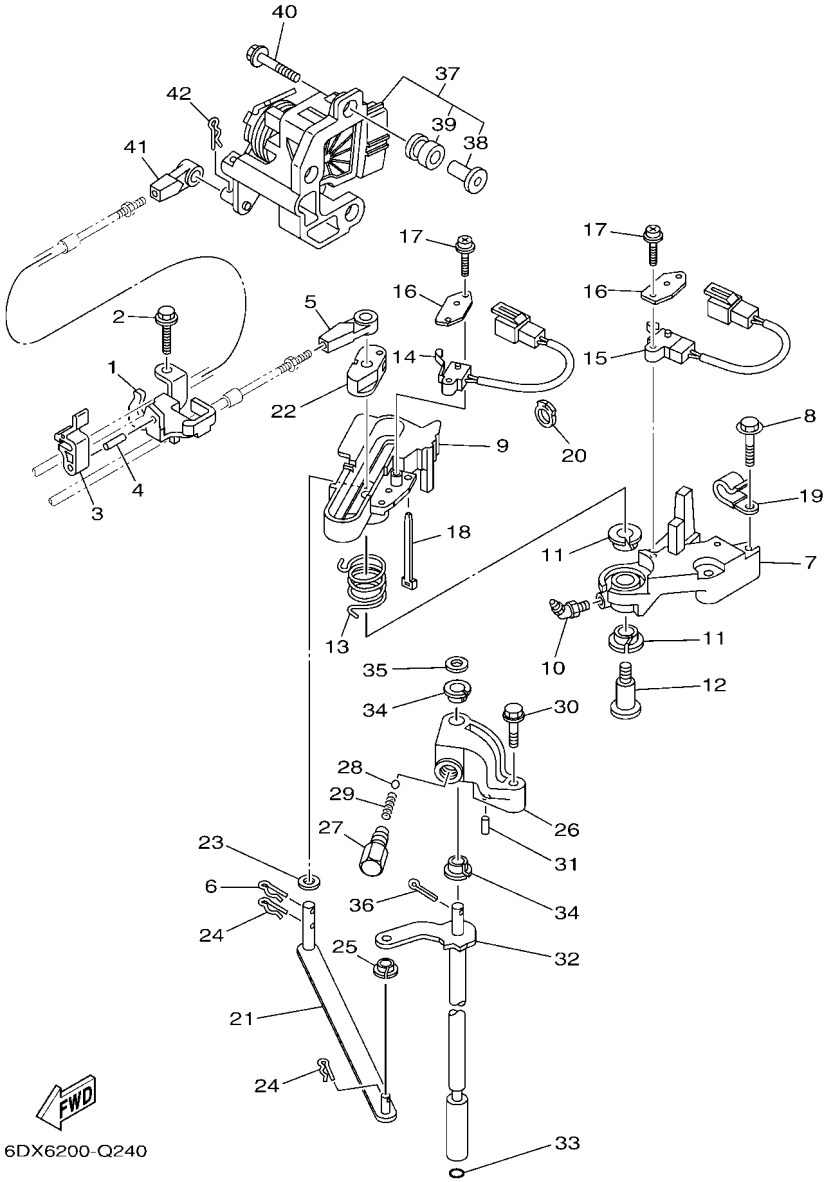

FIG. 24 CONTROL — CONTROL

REF. NO.	PART NO. CODIGO Nº	DESCRIPTION DESCRIPCION	6FJ1	6FK1				REMARKS OBSERVACIONES
1	6P2–48531–00	BRACKET, REMOTE CONTROL 1 SOPORTE DE CONTROL REMOTO	1	1				
2	90109–06M86	BOLT PERNO	2	2				
3	63P–48538–00	CLAMP, CABLE 1 GRAMPA DE CABLE	1	1				
4	91690–30010	PIN, SPRING PASADOR DE RESORTE	1	1				
5	6E5–48344–00	CABLE END, REMOTE CONTROL BASE CONTROL	1	1				
6	90468–18008	CLIP PRESILLA	1	1				
7	69J–44117–00	BRACKET SOPORTE	1	1				
8	97595–06535	BOLT, WITH WASHER PERNO CON ARANDELA	2	2				
9	69J–44176–01	BRACKET SOPORTE	1	1				
10	93700–06M01	NIPPLE, GREASE BOQUILLA DE ENGRASAR	1	1				
11	90386–12069	BUSH BUJE	2	2				
12	90109–08019	BOLT PERNO	1	1				
13	90508–20020	SPRING, TORSION RESORTE DE TORSION	1	1				
14	60V–8259F–00	SWITCH ASSY INTERRUPTOR	1	1				
15	69J–8259F–00	SWITCH ASSY INTERRUPTOR	1	1				
16	61A–82588–01	PLATE PLACA	2	2				
17	97985–04116	SCREW, WITH WASHER TORNILLO, CON ARANDELA	4	4				
18	90465–11M10	CLAMP BRIDA	1	1				
19	90465–06M86	CLAMP BRIDA	1	1				
20	90464–09010	CLAMP BRIDA	1	1				
21	6P2–44121–00	LEVER, SHIFT ROD PALANCA VARILLA CAMBIOS	1	1				
22	69J–44122–00	BUSHING, SHIFT ROD LEVER BUJE PALANCA VARILLA DE CAMBIO	1	1				
23	90202–08M20	WASHER, PLATE ARANDELA DE PLANA	1	1				
24	90468–18008	CLIP PRESILLA	2	2				
25	90386–06M12	BUSH BUJE	1	1				
26	69J–44118–00	BRACKET SOPORTE	1	1				
27	648–42715–00	BUSHING BUJE	1	1				

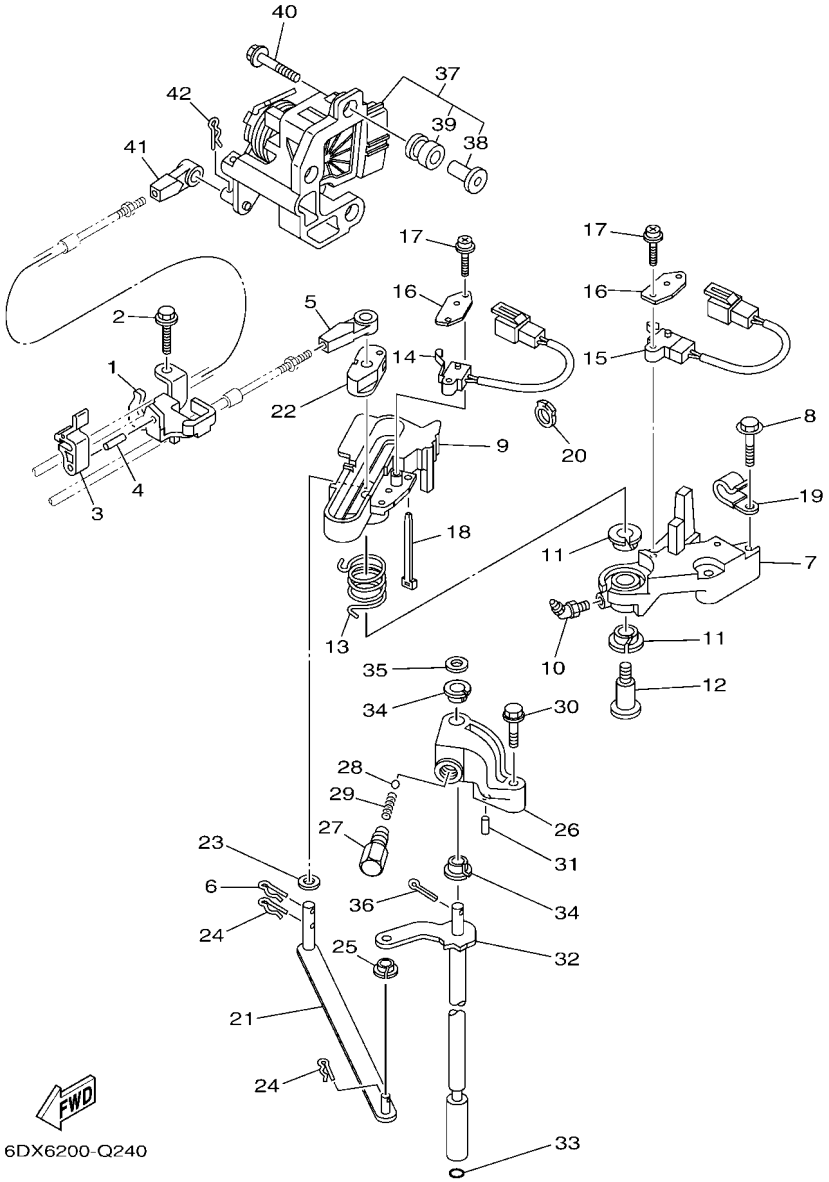

FIG. 24 CONTROL — CONTROL

REF. NO.	PART NO. CODIGO Nº	DESCRIPTION DESCRIPCION	6FJ1	6FK1				REMARKS OBSERVACIONES
28	93501–04M02	BALL BOLA	1	1				
29	90501–12082	SPRING, COMPRESSION RESORTE DE COMPRESION	1	1				
30	97575–06535	BOLT, WITH WASHER PERNO CON ARANDELA	1	1				
31	91690–30010	PIN, SPRING PASADOR DE RESORTE	1	1				
32	69J–44120–01	HANDLE GEAR SHIFT ASSY MANIJA DE CAMBIO COMPL	1	1				X(25.3") X(25.3")
	69J–44120–11	HANDLE GEAR SHIFT ASSY MANIJA DE CAMBIO COMPL	1	1				U(30.3") U(30.3")
33	93210–09165	O-RING ANILLO O	1	1				
34	90386–90M90	BUSH BUJE	2	2				
35	90201–09M02	WASHER, PLATE ARANDELA PLANA	1	1				
36	91490–20015	PIN. COTTER CHAVETA	1	1				
37	6P2–8A410–01	SENSOR UNIT UNIDAD DE SENSOR	1	1				
38	6P2–44139–00	.COLLAR .COLLAR	3	3				
39	6CB–41273–00	.GROMMET .TAPON PROTECTOR	3	3				
40	90119–06126	BOLT, WITH WASHER TORNILLO CON ARANDELA	3	3				
41	6E5–48344–00	CABLE END, REMOTE CONTROL BASE CONTROL	1	1				
42	90468–18008	CLIP PRESILLA	1	1				

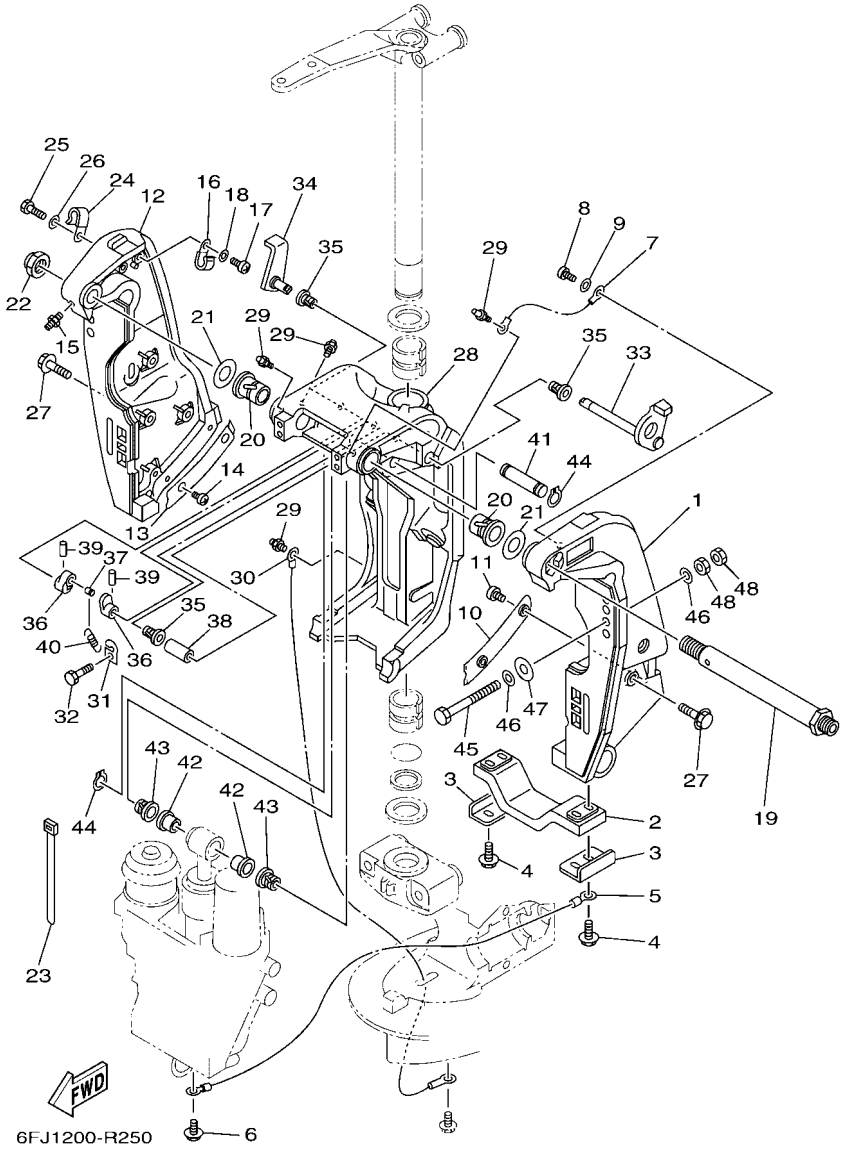

FIG. 25 BRACKET 1 — SOPORTE 1

REF. NO.	PART NO. CODIGO Nº	DESCRIPTION DESCRIPCION	6FJ1	6FK1				REMARKS OBSERVACIONES
1	69J–43111–02–8D	BRACKET, CLAMP 1 SOPORTE DE LA ABRAZADERA 1	1	1				
2	6G5–45251–02	ANODE CATODE	1	1				
3	6G5–44526–00	PLATE PLACA 1	2	2				
4	97595–06525	BOLT, WITH WASHER PERNO CON ARANDELA	4	4				
5	6H1–82148–00	WIRE, LEAD 4 CABLE CONDUCTOR 4	1	1				
6	97595–06510	BOLT, WITH WASHER PERNO CON ARANDELA	1	1				
7	6E5–82148–00	WIRE, LEAD 4 CABLE CONDUCTOR 4	1	1				
8	97885–06012	SCREW, PAN HEAD TORNILLO A MUESCA	1	1				
9	92995–06600	WASHER ARANDELA	1	1				
10	61A–43132–00	WASHER, FRICTION ARANDELA DE FRICCION	1	1				
11	97885–06010	SCREW, PAN HEAD TORNILLO A MUESCA	2	2				
12	69J–43112–01–8D	BRACKET, CLAMP 2 SOPORTE DE LA ABRAZADERA 2	1	1				
13	61A–43133–00	WASHER,FRICTION RONDANA	1	1				
14	97885–06010	SCREW, PAN HEAD TORNILLO A MUESCA	2	2				
15	93700–06M03	NIPPLE, GREASE BOQUILLA DE ENGRASAR	1	1				
16	90465–08M83	CLAMP BRIDA	1	1				
17	97885–06012	SCREW, PAN HEAD TORNILLO A MUESCA	1	1				
18	92995–06600	WASHER ARANDELA	1	1				
19	6R3–43131–00	BOLT, CLAMP BRACKET TORNILLO DE ABRAZADERA DEL SOP	1	1				
20	90386–25M31	BUSH BUJE	2	2				
21	90201–26M59	WASHER, PLATE ARANDELA PLANA	2	2				
22	90185–22M11	NUT, SELF-LOCKING TUERCA AUTOBLOCANTE	1	1				
23	90465–11M10	CLAMP BRIDA	4	4				
24	90465–08M83	CLAMP BRIDA	1	1				
25	97095–06014	BOLT PERNO	1	1				
26	92995–06600	WASHER ARANDELA	1	1				
27	90119–10024	BOLT, WITH WASHER TORNILLO CON ARANDELA	8	8				

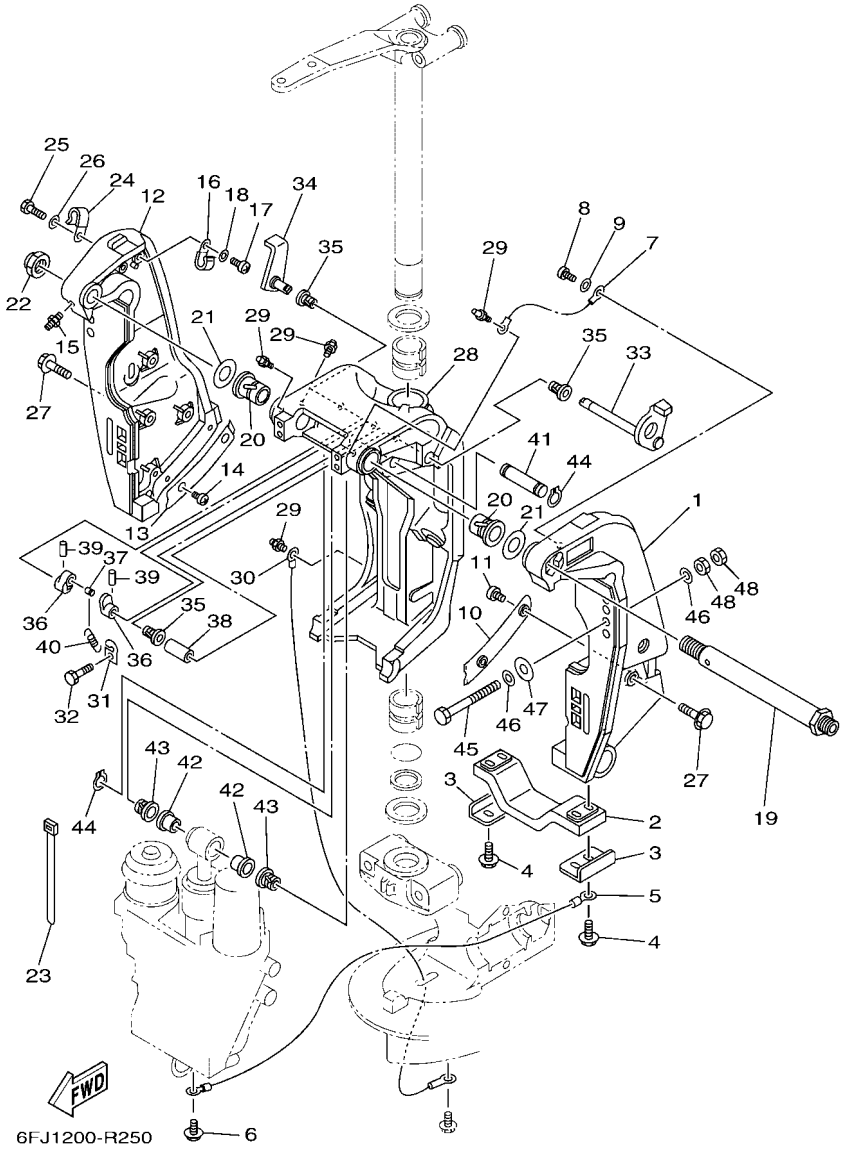

FIG. 25 BRACKET 1 — SOPORTE 1

REF. NO.	PART NO. CODIGO Nº	DESCRIPTION DESCRIPCION	6FJ1	6FK1				REMARKS OBSERVACIONES
28	61A–43311–22–8D	BRACKET, SWIVEL 1 SOPORTE GIRATORIO 1	1	1				
29	93700–06M03	NIPPLE, GREASE BOQUILLA DE ENGRASAR	5	5				
30	69J–82147–00	WIRE, LEAD 5 CABLE CONDUCTOR 5	1	1				
31	6G5–43144–00	HOOK, SPRING GANCHO	1	1				
32	97095–06010	BOLT PERNO	1	1				
33	61A–43181–01	LEVER, TILT STOP 1 PALANCA TOPE INCLINACION 1	1	1				
34	6G5–43185–02	LEVER, TILT STOP 2 PALANCA TOPE INCLINACION 2	1	1				
35	90386–10M16	BUSH BUJE	3	3				
36	6G5–43148–00	COLLAR, DISTANCE COLLAR	2	2				
37	90249–06M19	PIN PASADOR	1	1				
38	90387–10M05	COLLAR ESPACIADOR	1	1				
39	91690–30020	PIN, SPRING PASADOR DE RESORTE	2	2				
40	90506–16003	SPRING, TENSION RESORTE DE TENSION	1	1				
41	6E5–43126–10	PIN, UPPER SHOCK MOUNT PASADOR DE AMORTIGUADOR SUPERI	1	1				
42	90386–18M63	BUSH BUJE	2	2				
43	90386–18M14	BUSH BUJE	2	2				
44	93410–18M05	CIRCLIP SEGURO	2	2				
45	90101–12M05	BOLT (L:130MM) TORNILLO (L:130MM)	4	4				EXCEPT FOR MDV EXCEPT FOR MDV
	90101–12M05	BOLT (L:130MM) TORNILLO (L:130MM)	2					FOR MDV FOR MDV
	90101–12047	BOLT (L:150MM) TORNILLO (L:150MM)	2					FOR MDV FOR MDV
46	90201–13M01	WASHER, PLATE ARANDELA PLANA	8	8				
47	90201–12426	WASHER, PLATE ARANDELA PLANA	4	4				
48	95380–12600	NUT TUERCA	8	8				

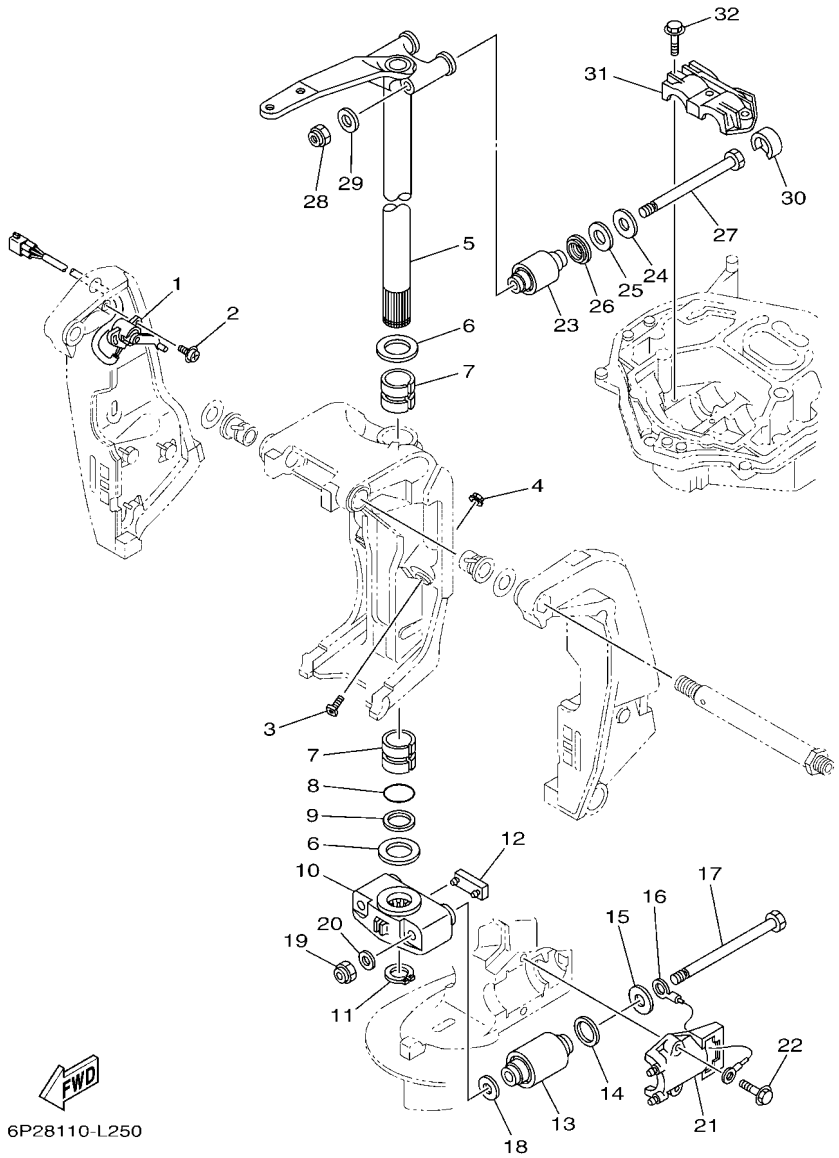

FIG. 26 BRACKET 2 — SOPORTE 2

REF. NO.	PART NO. CODIGO Nº	DESCRIPTION DESCRIPCION	6FJ1	6FK1				REMARKS OBSERVACIONES
1	69J–83672–11	TRIM SENDER TRANSMISOR DE INCLINADOR	1	1				
2	97985–06216	SCREW, WITH WASHER TORNILLO, CON ARANDELA	2	2				
3	61A–43376–00	BOLT, THRUST RECEIVER TORNILLO RECEPTOR	2	2				
4	95780–10300	NUT, FLANGE TUERCA	2	2				
5	69J–42510–00–8D	STEERING BRACKET ASSY SOPORTE DIRECCION COMPL.	1	1				
6	90201–40M00	WASHER, PLATE ARANDELA PLANA	2	2				
7	90386–39M89	BUSH BUJE	2	2				
8	93210–35321	O-RING ANILLO O	1	1				
9	90202–40M47	WASHER, PLATE ARANDELA DE PLANA	1	1				
10	69J–44551–00–8D	HOUSING, LOWER MOUNT RUBBER 1 CAJA AMORTIGUADOR INFERIOR HU	1	1				
11	93410–37M04	CIRCLIP SEGURO	1	1				
12	61A–44575–00	DAMPER, LOWER MOUNT RUBBER AMORTIGUADOR INFERIOR	1	1				
13	60X–44555–00	MOUNT DAMPER, LOWER SIDE AMORTIGUADOR DE HULE LADO INFE	2	2				
14	90202–32M19	WASHER, PLATE ARANDELA DE PLANA	2	2				
15	90201–16016	WASHER, PLATE ARANDELA PLANA	2	2				
16	6E5–82149–00	WIRE, LEAD 3 CABLE CONDUCTOR 3	1	1				
17	90101–14002	BOLT TORNILLO	2	2				
18	90201–15M58	WASHER, PLATE ARANDELA PLANA	2	2				
19	90185–14M00	NUT, SELF-LOCKING TUERCA AUTOBLOCANTE	2	2				
20	92995–14600	WASHER ARANDELA	2	2				
21	61A–44552–01–CA	HOUSING, LOWER MOUNT RUBBER 2 CAJA AMORTIGUADOR INFERIOR HU	2	2				
22	90119–10024	BOLT, WITH WASHER TORNILLO CON ARANDELA	4	4				
23	69J–44514–00	MOUNT DAMPER, UPPER SIDE AMORTIGUADOR LADO SUPERIOR	2	2				
24	90201–16015	WASHER, PLATE ARANDELA PLANA	2	2				
25	90202–28M46	WASHER, PLATE ARANDELA DE PLANA	2	2				
26	69J–44532–00	STOPPER, UPPER MOUNT RETEN	2	2				
27	90101–14003	BOLT TORNILLO	2	2				

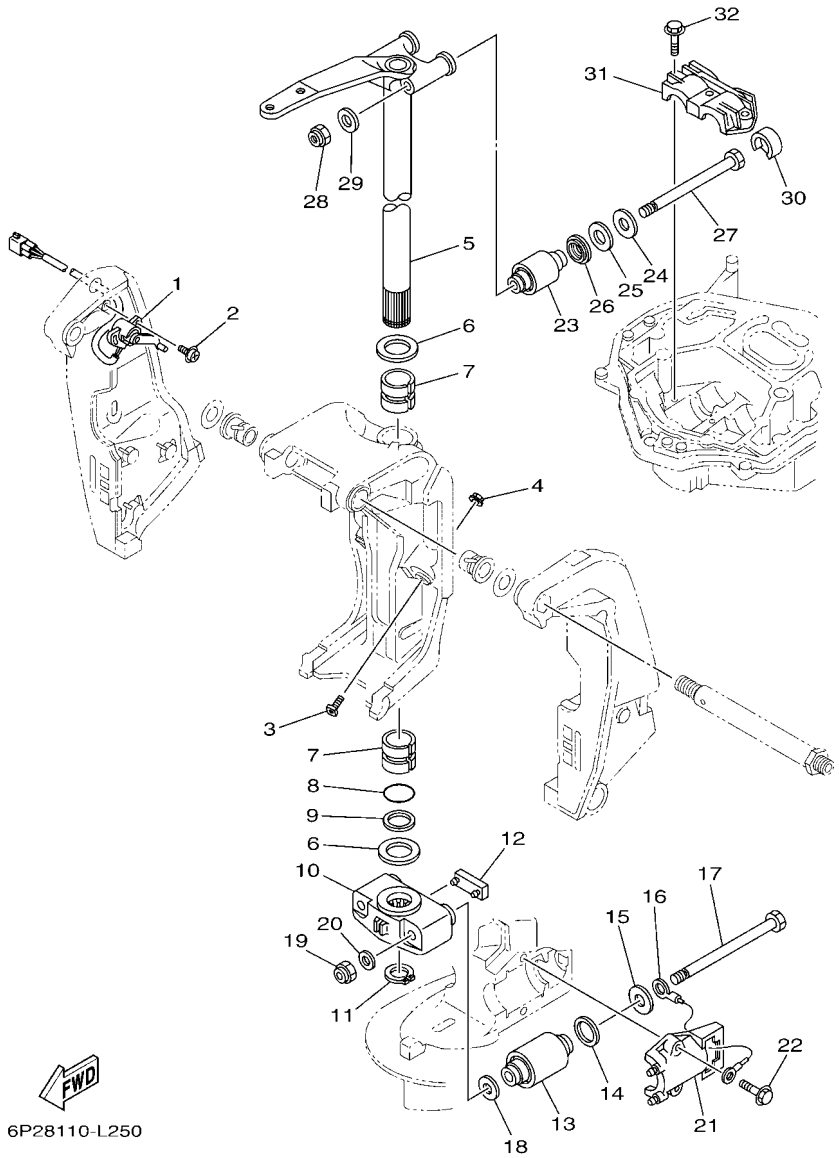

FIG. 26 BRACKET 2 — SOPORTE 2

REF. NO.	PART NO. CODIGO Nº	DESCRIPTION DESCRIPCION	6FJ1	6FK1				REMARKS OBSERVACIONES
28	90185–14M00	NUT, SELF-LOCKING TUERCA AUTOBLOCANTE	2	2				
29	92995–14600	WASHER ARANDELA	2	2				
30	69J–44533–00	DAMPER, UPPER MOUNT RUBBER AMORTIGUADOR SUPERIOR	2	2				
31	61A–44511–01	COVER, UPPER MOUNT CUBIERTA AMORTIGUADOR SUPERIOR	1	1				
32	90119–10024	BOLT, WITH WASHER TORNILLO CON ARANDELA	3	3				

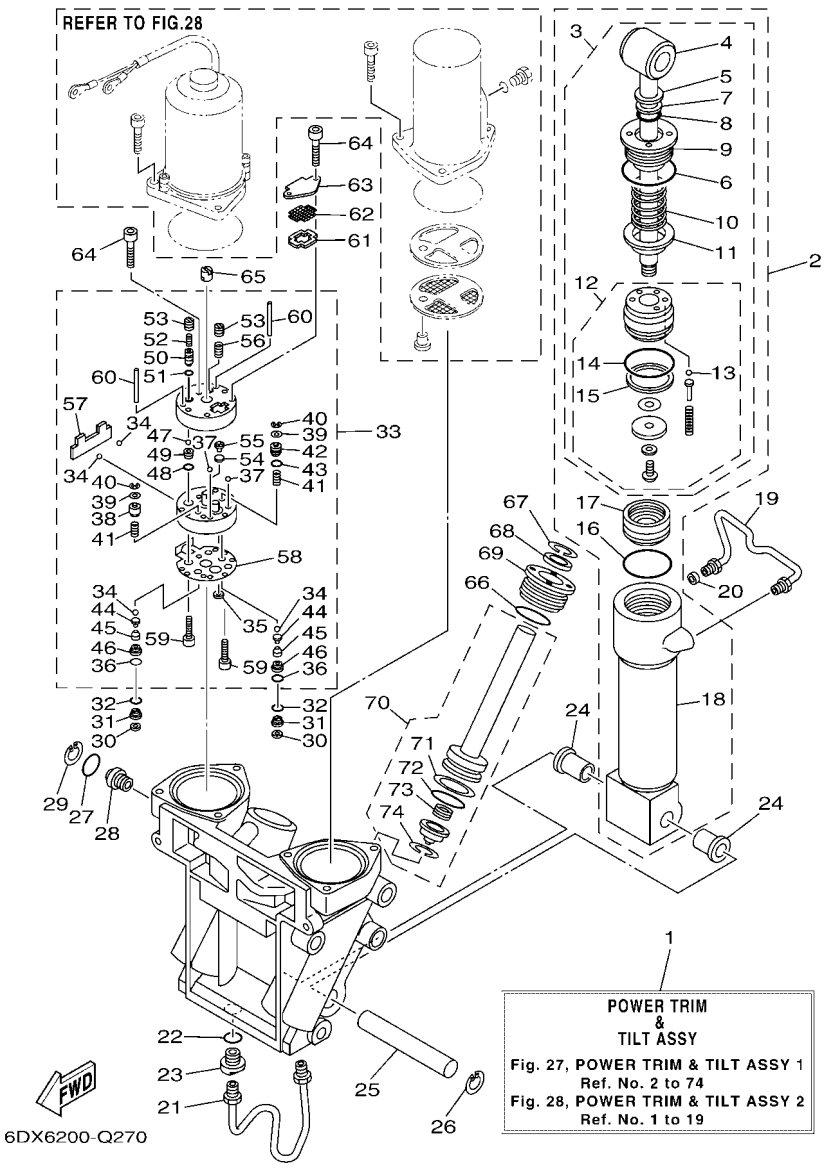

FIG. 27 POWER TRIM & TILT ASSY 1 — COMPONER Y PODER VARILLA 1

REF. NO.	PART NO. CODIGO Nº	DESCRIPTION DESCRIPCION	6FJ1	6FK1				REMARKS OBSERVACIONES
1	69J–43800–07–8D	POWER TRIM & TILT ASSY ELEVADOR HIDRAULICO COMPL.	1	1				
2	6CE–43840–00	POWER TILT ASSY CONJUNTO COMPONER	1	1				
3	6CE–43810–00	.TILT PISTON SUB ASSY .ELEVADOR SUB-PISTON COMPL.	1	1				
4	69J–43801–01	..ROD ..VALILLA COMPL INCLINACION	1	1				
5	93106–19N50	..OIL SEAL ..SELLO ACEITE	1	1				
6	6H1–43861–00	..O-RING ..ANILLO EN O 1	1	1				
7	6H1–43872–00	..RING, BACK UP ..ANILLO	1	1				
8	61A–4389H–01	..O-RING ..ANILLO EN O	1	1				
9	61A–43811–00	..SCREW, CYLINDER END ..TORNILLO CILINDRO EXTREMO	1	1				
10	69J–4384H–00	..SPRING ..RESORTE	1	1				
11	69J–4382E–00	..ADAPTOR 2 ..ADAPTADOR 2	1	1				
12	6CE–4380P–00	..PISTON SUB ASSY ..SUB-PISTON COMPL	1	1				
13	93505–32038	...BALL ...BOLA	5	5				
14	61A–43861–00	...O-RING ...ANILLO EN O 1	1	1				
15	61A–43871–00	...RING, BACK UP ...ANILLO	1	1				
16	61A–43861–00	.O-RING .ANILLO EN O 1	1	1				
17	6H1–43814–00	.PISTON, FREE .PISTON LIBRE	1	1				
18	61A–43813–02	.CYLINDER, TILT .CILINDRO INCLINACION	1	1				
19	61A–43835–01	PIPE TUBO 3	1	1				
20	69J–4388J–00	PLUG 2 TAPON 2	1	1				
21	69J–43833–02	PIPE TUBO 1	1	1				
22	93210–17239	O-RING ANILLO O	1	1				
23	69J–4388E–01	BOLT ,SCREW PERNO	1	1				
24	90386–18M14	BUSH BUJE	2	2				
25	61A–43818–00	PIN, LOWER SHOCK MOUNT PASADOR AMORTIGUADOR INFERIOR	1	1				
26	61A–43876–00	RING, SNAP ANILLO	1	1				
27	6D8–43863–00	O-RING ANILLO EN O 3	1	1				

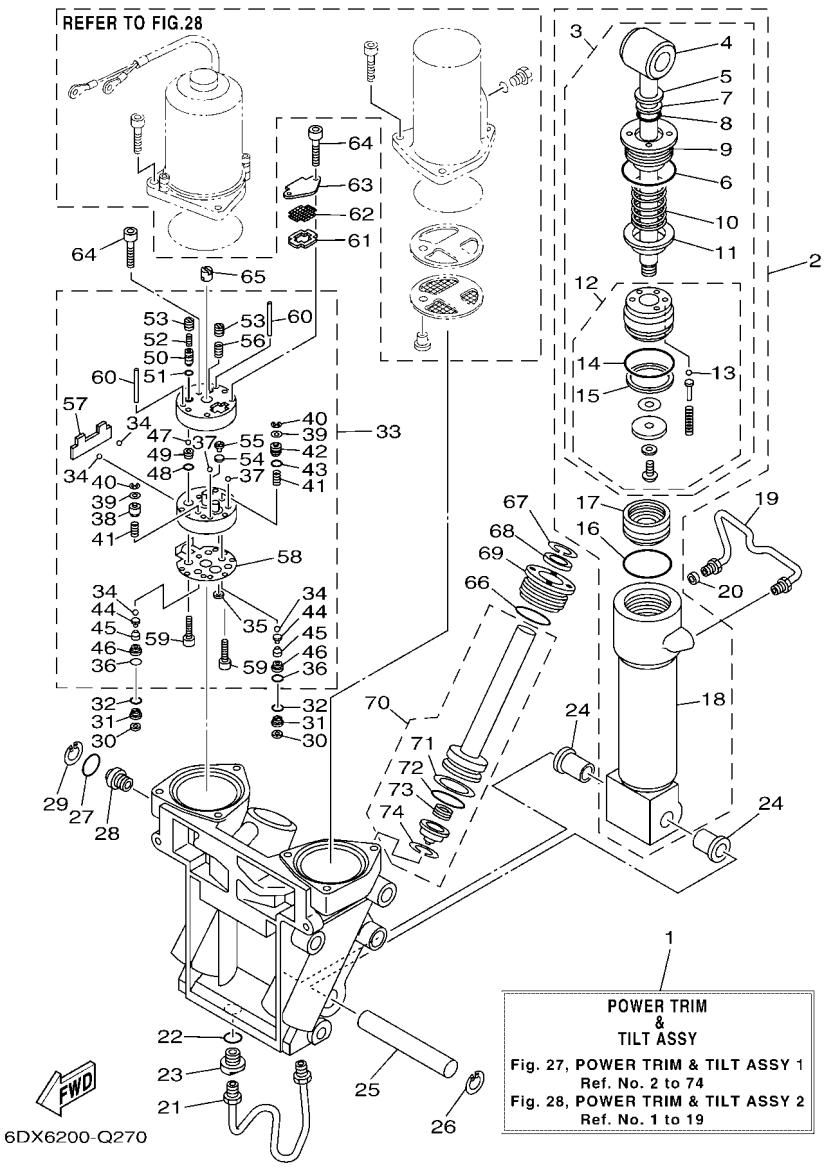

FIG. 27 POWER TRIM & TILT ASSY 1 — COMPONER Y PODER VARILLA 1

REF. NO.	PART NO. CODIGO Nº	DESCRIPTION DESCRIPCION	6FJ1	6FK1				REMARKS OBSERVACIONES
28	69J–43845–00	SCREW, MANUAL RELEASE TORNILLO DESCOPLO MANUAL	1	1				
29	6H1–43875–00	RING, SNAP ANILLO	1	1				
30	69J–4381C–00	FILTER 3 FIELTRO 3	2	2				
31	69J–43899–01	PLATE STOPPER PLACA	2	2				
32	69J–4389J–00	O-RING ANILLO O	2	2				
33	69J–43830–01	GEAR PUMP ASSY ENGRANAJE BOMBA COMPL.	1	1				
34	93505–32038	.BALL .BOLA	4	4				
35	69J–4381C–00	.FILTER 3 .FIELTRO 3	1	1				
36	69J–4389J–00	.O-RING .ANILLO O	2	2				
37	93503–16003	.BALL .ESFERA	2	2				
38	6CJ–4384M–00	.PISTON, SHUTTLE 2 .PISTON 2	1	1				
39	69A–4384F–00	.SEAL, MAIN VALVE .ASIENTO	2	2				
40	99002–03600	.CIRCLIP .PRESILLA REDONDA	2	2				
41	69J–43894–00	.SPRING, SHUTTLE RETURN .RESORTE	2	2				
42	6CJ–43841–00	.PISTON, SHUTTLE .PISTON	1	1				
43	6H1–43883–00	.O-RING .ANILLO EN O 10	1	1				
44	60V–4386A–00	.PIN, ABSORBER VALVE .PASADOR VALVULA ABSORBER	2	2				
45	69J–43853–00	.SPRING, MAIN VALVE .RESORTE	2	2				
46	6CJ–43893–00	.WASHER .RONDANA	2	2				
47	93501–08001	.BALL .BOLA	2	2				
48	93210–08391	.O-RING .ANILLO O	1	1				
49	69J–43851–00	.SEAT, RELIEF VALVE .ASIENTO VALVULA DE DESCARGA	1	1				
50	6CJ–43844–00	.PIN, VALVE SUPPORT .PASADOR VALVULA SOPORTE	1	1				
51	93210–064A5	.O-RING .ANILLO O	1	1				
52	69J–43855–00	.SPRING, UP RELIEF .RESORTE SEGURIDAD SUPERIOR	1	1				
53	6CJ–43843–00	.SCREW, VALVE LOCK .TORNILLO	2	2				
54	6H1–4384G–11	.SEAL, RELIEF VALVE .ASIENTO	1	1				

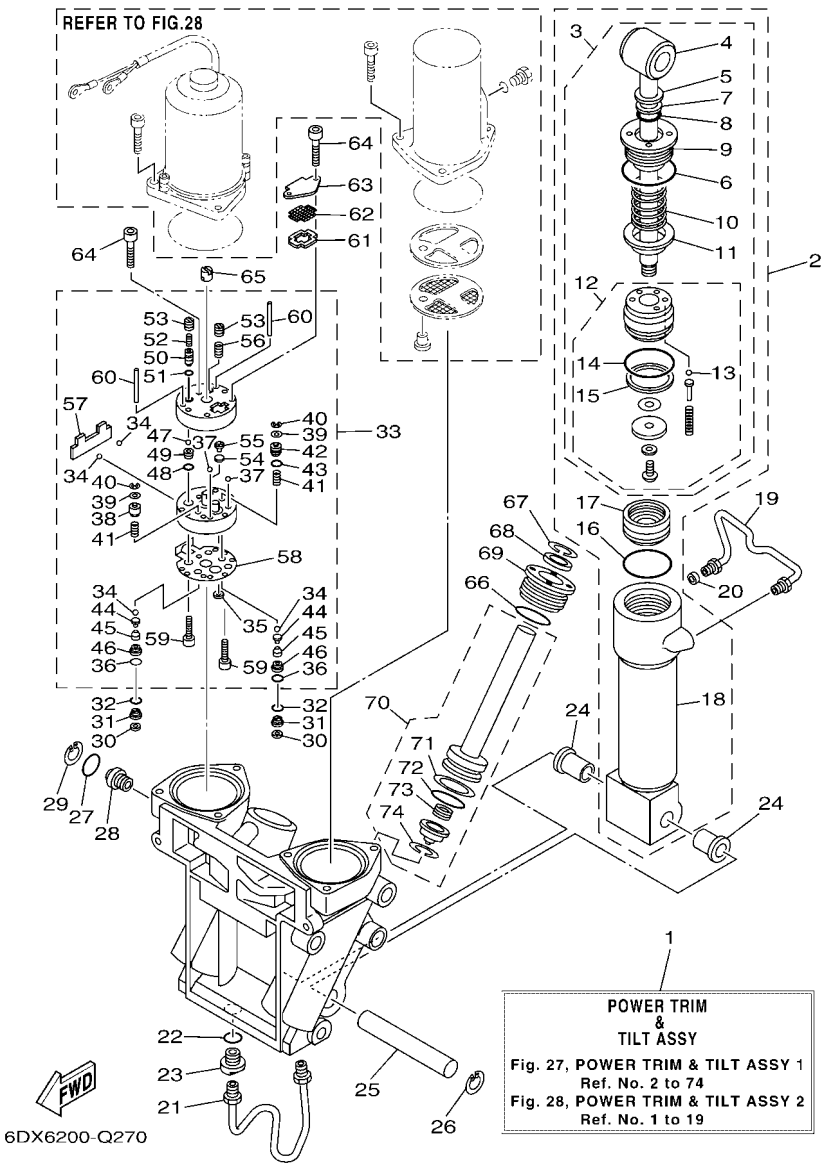

FIG. 27 POWER TRIM & TILT ASSY 1 — COMPONER Y PODER VARILLA 1

REF. NO.	PART NO. CODIGO Nº	DESCRIPTION DESCRIPCION	6FJ1	6FK1				REMARKS OBSERVACIONES
55	6H1–43844–10	.PIN, VALVE SUPPORT .PASADOR VALVULA SOPORTE	1	1				
56	6H1–43856–10	.SPRING, DOWN RELIEF .RESORTE SEGURIDAD	1	1				
57	69J–43854–00	.SPRING, MANUAL RELEASE .RESORTE DESCOPLO MANUAL	1	1				
58	69J–4384G–00	.SEAL, RELIEF VALVE .ASIENTO	1	1				
59	91318–05025	.BOLT .TORNILLO	2	2				
60	93604–35236	.PIN, DOWEL .PASADOR DE CLAVIJA	2	2				
61	69J–43871–00	RING, BACK UP ANILLO	1	1				
62	69J–43816–00	FILTER 1 FIELTRO 1	1	1				
63	69J–4381J–00	PLATE PLACA	1	1				
64	91318–05040	BOLT TORNILLO	3	3				
65	69J–43831–00	CONNECTOR, SHAFT CONEXION EJE	1	1				
66	61A–43861–00	O-RING ANILLO EN O 1	2	2				
67	6T4–43875–01	RING, SNAP ANILLO	2	2				
68	61A–43822–00	SEAL, TRIM DUST SELLO DE POLVO	2	2				
69	61A–43821–01	SCREW, TRIM CYLINDER END TORNILLO CILINDURO EXTREMO	2	2				
70	69J–43820–01	TRIM PISTON SUB ASSY ELEVADOR PISTON COMPL.	2	2				
71	61A–43874–00	.RING, BACK UP .ANILLO	1	1				
72	61A–43864–00	.O-RING .ANILLO EN O 4	1	1				
73	61A–4384H–10	.SPRING .RESORTE	1	1				
74	61A–43875–10	.RING, SNAP .ANILLO	1	1				

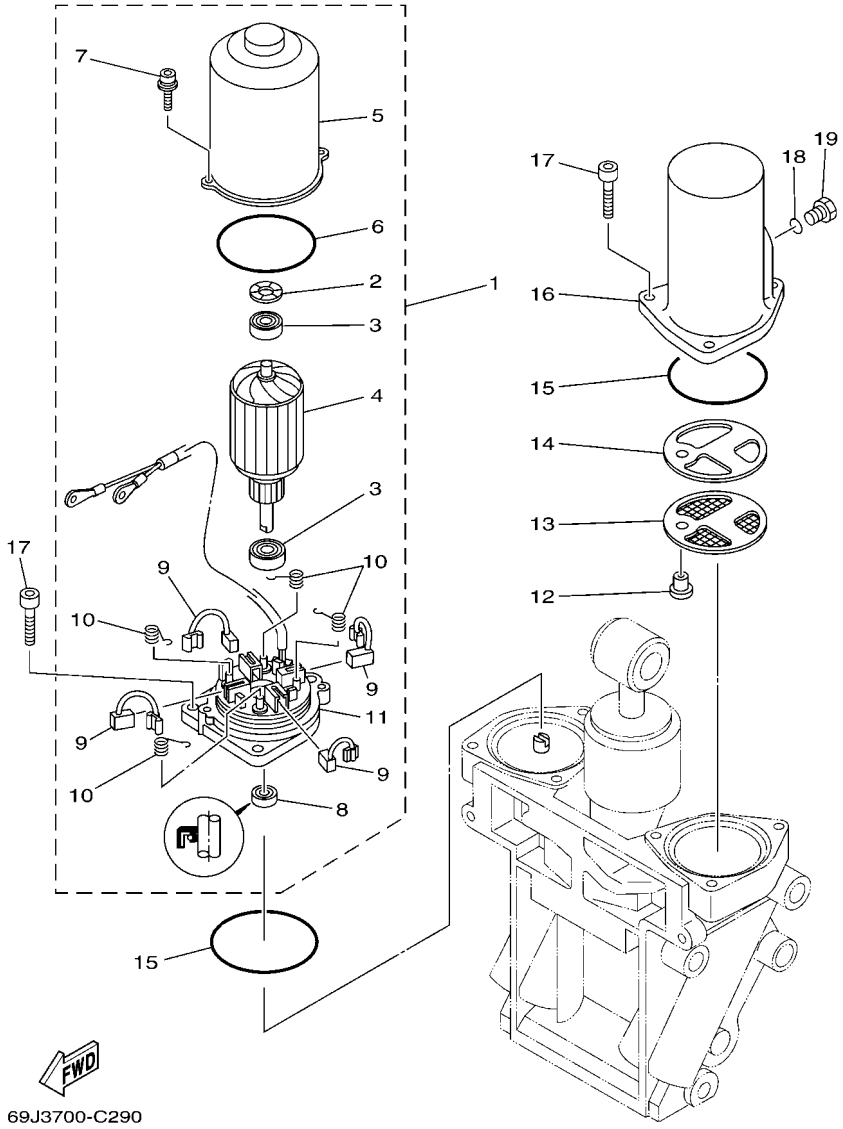

FIG. 28 POWER TRIM & TILT ASSY 2 — COMPONER Y PODER VARILLA 2

REF. NO.	PART NO. CODIGO Nº	DESCRIPTION DESCRIPCION	6FJ1	6FK1				REMARKS OBSERVACIONES
1	69J–43880–01	MOTOR ASSY MOTOR COMPL.	1	1				
2	90206–14N50	.WASHER, WAVE .ARANDELA ONDULADA	1	1				
3	93399–999T6	.BEARING .COJINETE	2	2				
4	69J–43805–00	.ARMATURE ASSY .INDUCIDO COMPL.	1	1				
5	69J–43804–00	.STATOR ASSY .ESTATOR COMPL	1	1				
6	69J–43861–00	.O-RING .ANILLO EN O 1	1	1				
7	69J–43886–00	.BOLT .TORNILLO	2	2				
8	69J–43882–00	.OIL SEAL .SELLO ACEITE	1	1				
9	69J–43891–00	.BRUSH 1 .ESCOBILLA 1	4	4				
10	69J–4386K–00	.SPRING, BRUSH .RESORTE, ESCOBILLA	4	4				
11	69J–43881–01	.FRAME, END .CUADRO EXTERMO	1	1				
12	69J–4388H–00	PLUG TAPON	1	1				
13	69J–43817–00	FILTER 2 FIELTRO 2	1	1				
14	69J–4388F–00	SPACER ESPACIADOR	1	1				
15	93210–66001	O-RING ANILLO O	2	2				
16	69J–43828–00	BODY, RESERVOIR CUERPO DEPOSITO	1	1				
17	69J–43888–00	BOLT, SOCKET TORNILLO ENCASTRE	6	6				
18	93210–09165	O-RING ANILLO O	1	1				
19	6H1–43829–00	PLUG, RESERVOIR TAPON DEPOSITO	1	1				

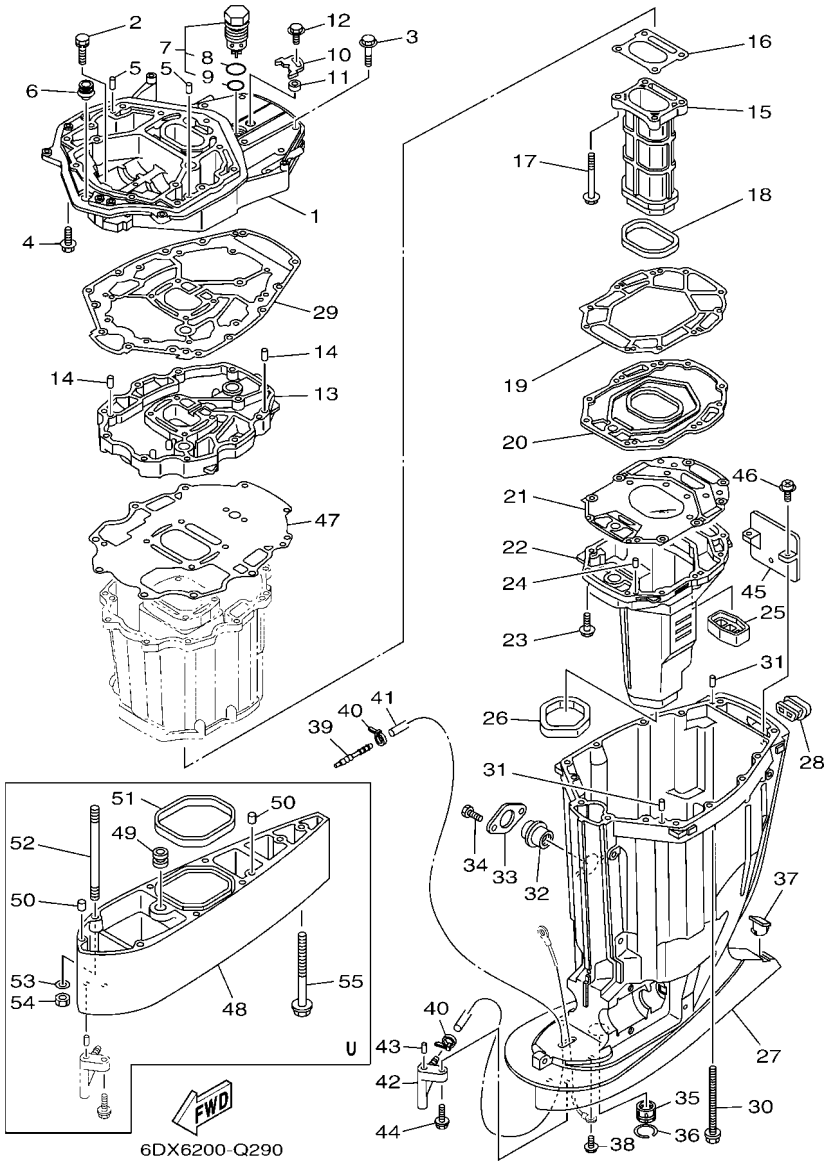

FIG. 29 UPPER CASING — FUNDA SUPERIOR

REF. NO.	PART NO. CODIGO Nº	DESCRIPTION DESCRIPCION	6FJ1	6FK1				REMARKS OBSERVACIONES
1	69J–41137–10–CA	GUIDE, EXHAUST GUIA DE ESCAPE	1	1				
2	90119–08102	BOLT, WITH WASHER TORNILLO CON ARANDELA	2	2				
3	97575–10545	BOLT, WITH WASHER PERNO CON ARANDELA	7	7				
4	97575–10535	BOLT, WITH WASHER PERNO CON ARANDELA	7	7				
5	93608–16M16	PIN, DOWEL PASADOR DE CLAVIJA	2	2				
6	6E5–42724–00	GROMMET TAPON	1	1				
7	6AW–11371–10	PRESSURE CONTROL VALVE ASSY VALVULA, CONTROL DE PRESION	1	1				
8	93210–347A1	.O-RING .ANILLO O	1	1				
9	93210–28543	.O-RING .ANILLO O	1	1				
10	69J–12233–00	PLATE, GUIDE STOPPER 1 PLACA DE TOPE DE GUIA 1	1	1				
11	90387–06037	COLLAR ESPACIADOR	1	1				
12	97595–06520	BOLT, WITH WASHER PERNO CON ARANDELA	1	1				
13	69J–41131–11–CA	MANIFOLD, EXT. 1 TUBO MULTIPLE DE ESCAPE	1	1				
14	93608–16M16	PIN, DOWEL PASADOR DE CLAVIJA	2	2				
15	69J–41132–20–9S	MANIFOLD, EXHAUST TUBO MULTIPLE DE ESCAPE	1	1				
16	6P2–41134–00	GASKET, EXHAUST MANIFOLD EMPAQUE	1	1				
17	97575–08590	BOLT, WITH WASHER PERNO CON ARANDELA	4	4				
18	69J–41138–00	SEAL, EXT. 1 SELLO, ESCAPE 1	1	1				
19	69J–41135–A0	GASKET, EXHAUST MANIFOLD EMPAQUE	1	1				
20	69J–45181–10–9S	PLATE PLACA	1	1				
21	6S1–41136–00	GASKET, EXHAUST MANIFOLD 4 EMPAQUE	1	1				
22	69J–14711–21–9S	MUFFLER 1 SILENCIADOR 1	1	1				
23	97575–08535	BOLT, WITH WASHER PERNO CON ARANDELA	10	10				
24	93606–19M23	PIN, DOWEL PASADOR DE CLAVIJA	2	2				
25	69J–45127–00	SEAL SELLO DE GOMA	1	1				
26	69J–45123–00	GASKET, MUFFLER EMPAQUE SILENCIADOR	1	1				
27	69J–45111–10–8D	CASING, UPPER CAJA SUPERIOR	1	1				

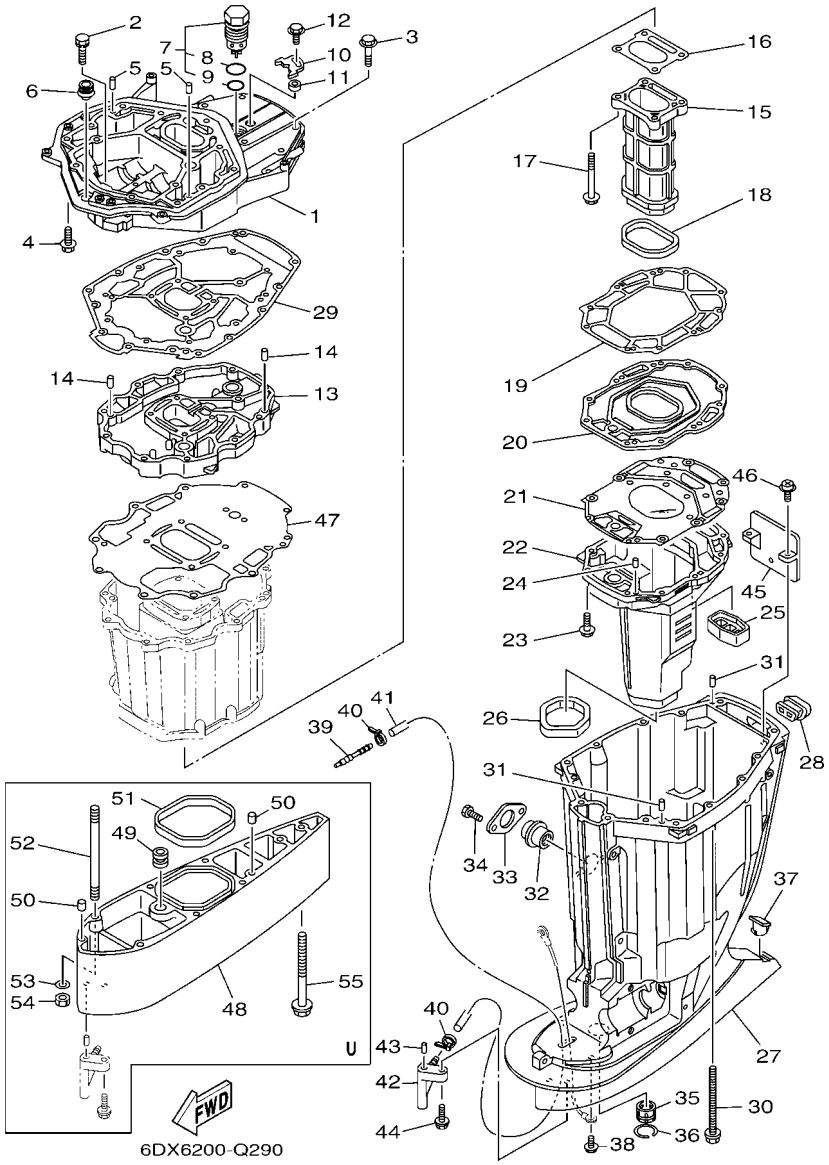

FIG. 29 UPPER CASING — FUNDA SUPERIOR

REF. NO.	PART NO. CODIGO Nº	DESCRIPTION DESCRIPCION	6FJ1	6FK1				REMARKS OBSERVACIONES
28	69J–42769–00	SEAL, RUBBER SELLO DE GOMA	1	1				
29	69J–45113–20	GASKET, UPPER CASING EMPAQUE	1	1				
30	90119–10007	BOLT, WITH WASHER TORNILLO CON ARANDELA	6	6				
31	93608–16M16	PIN, DOWEL PASADOR DE CLAVIJA	2	2				
32	69J–15316–00	DAMPER 1 AMORTIGUADOR 1	1	1				
33	69J–45152–10	COVER, UPPER CASING 2 CUBIERTA FUNDA SUPERIOR 2	1	1				
34	97095–06012	BOLT PERNO	2	2				
35	69J–45318–01	BUSHING, DRIVE SHAFT BUJE, EJE DE MANDO	1	1				
36	93420–36M01	CIRCLIP SEGURO	1	1				
37	61A–45155–00	CAP TAPA	1	1				
38	95895–06010	BOLT, FLANGE TORNILLO DE REBORDE	1	1				
39	6E5–83558–00	END, NIPPLE EXTREMO DE NIPLE	1	1				
40	90465–11M10	CLAMP BRIDA	2	2				
41	90445–07010	HOSE (L1330) TUBO (L1330)	1	1				X(25.3") X(25.3")
	90445–07012	HOSE (L1457) TUBO (L1457)	1	1				U(30.3") U(30.3")
42	61A–45378–00	NIPPLE, HOSE NIPLE MANGUERA	1	1				
43	93606–12019	PIN, DOWEL PASADOR DE CLAVIJA	1	1				
44	90119–06M17	BOLT, WITH WASHER TORNILLO CON ARANDELA	1	1				
45	69J–14624–01	COVER, EXHAUST CUBIERTA ESCAPE	1	1				
46	97980–06216	SCREW, WITH WASHER TORNILLO, CON ARANDELA	2	2				
47	69J–15312–01	GASKET, OIL PAN EMPAQ BANDEJA DE ACEITE	1	1				
48	69J–45211–02–8D	EXTENSION EXTENSION	1	1				U(30.3") U(30.3")
49	6E5–44366–00	DAMPER, WATER SEAL 2 GOMA DEL SELLO DE AGUA 2	1	1				U(30.3") U(30.3")
50	93608–12M05	PIN, DOWEL PASADOR DE CLAVIJA	2	2				U(30.3") U(30.3")
51	69J–45159–00	DAMPER SELLO DE GOMA	1	1				U(30.3") U(30.3")
52	90116–10012	BOLT, STUD ESPARRAGO	6	6				U(30.3") U(30.3")
53	92995–10600	WASHER ARANDELA	6	6				U(30.3") U(30.3")

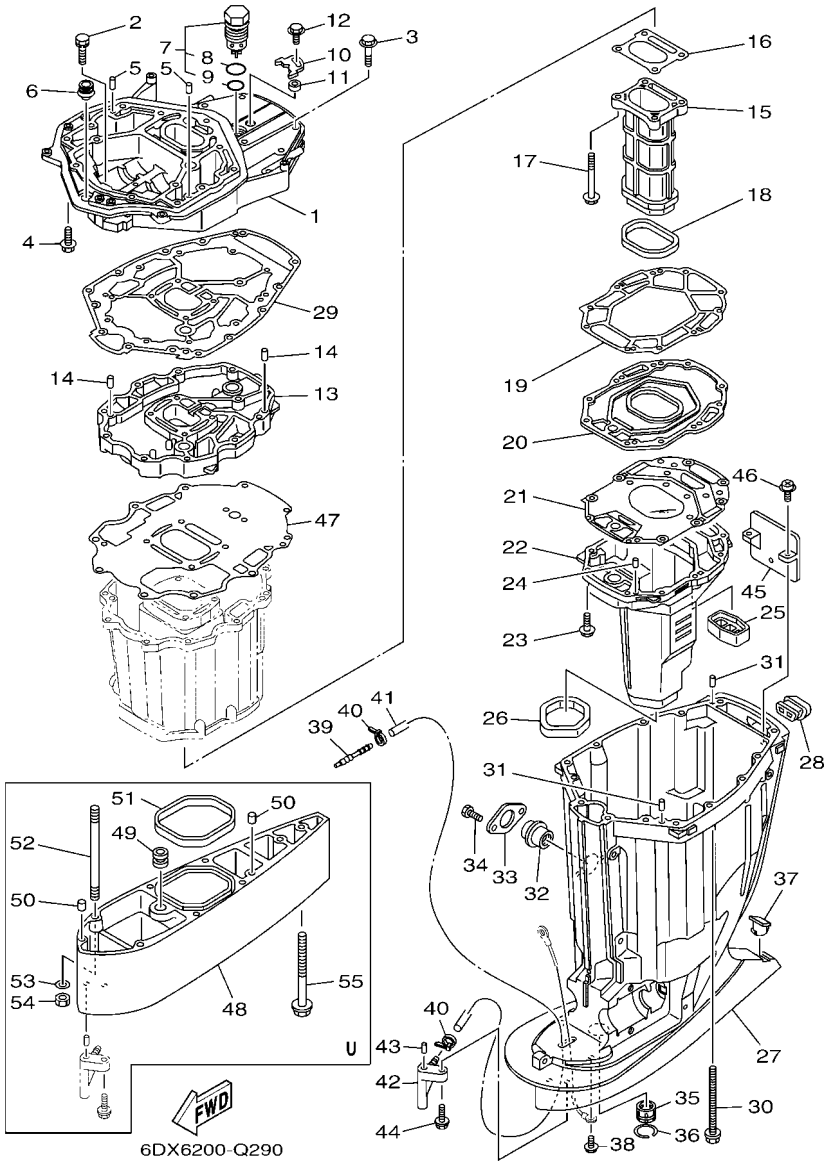

FIG. 29 UPPER CASING — FUNDA SUPERIOR

REF. NO.	PART NO. CODIGO Nº	DESCRIPTION DESCRIPCION	6FJ1	6FK1				REMARKS OBSERVACIONES
54	95380–10600	NUT TUERCA	6	6				U(30.3") U(30.3")
55	90119–10009	BOLT, WITH WASHER TORNILLO CON ARANDELA	1	1				U(30.3") U(30.3")

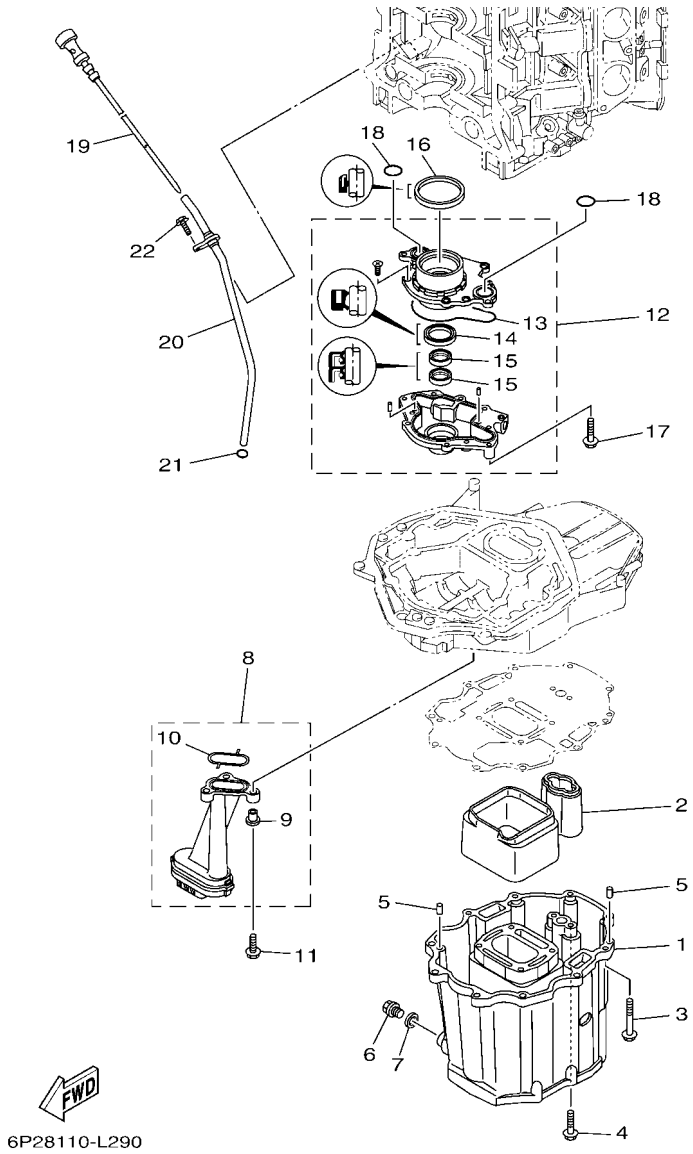

FIG. 30 OIL PAN

OIL PAN

REF. NO.	PART NO. CODIGO Nº	DESCRIPTION DESCRIPCION	6FJ1	6FK1				REMARKS OBSERVACIONES
1	69J–15311–10–CA	OIL PAN BANDEJA DE ACEITE	1	1				
2	69J–15761–00	SEAL, RUBBER 1 SELLO DE GOMA 1	1	1				
3	97575–08560	BOLT, WITH WASHER PERNO CON ARANDELA	10	10				
4	97575–08535	BOLT, WITH WASHER PERNO CON ARANDELA	2	2				
5	93608–16M16	PIN, DOWEL PASADOR DE CLAVIJA	2	2				
6	90340–14M06	PLUG, STRAIGHT SCREW TORNILLO, DE DRENAJE	1	1				
7	90430–14M09	GASKET JUNTA	1	1				
8	69J–13411–00	STRAINER, OIL FILTRO DE ACEITE	1	1				
9	90387–06263	.COLLAR .ESPACIADOR	3	3				
10	69J–13415–00	.SEAL, OIL STRAINER .SELLO COLADOR ACEITE	1	1				
11	95812–06025	BOLT, FLANGE TORNILLO DE REBORDE	3	3				
12	6P2–13300–00	OIL PUMP ASSY BOMBA DE ACEITE COMPLETA	1	1				
13	69J–13329–01	.GASKET, PUMP COVER .EMPAQUE TAPA DE BOMBA	1	1				
14	6AW–13119–00	.OIL SEAL .SELLO ACEITE	1	1				
15	69J–13631–00	.OIL SEAL .SELLO ACEITE	2	2				
16	69J–11355–00	SEAL, CYLINDER 1 RETEN ACEITE CILINDRO 1	1	1				
17	97575–06540	BOLT, WITH WASHER PERNO CON ARANDELA	4	4				
18	93210–25552	O-RING ANILLO O	2	2				
19	6P2–15362–10	PLUG, OIL LEVEL TAPON DEL NIVEL DE ACEITE	1	1				
20	6P2–15377–10	GUIDE, INLET GUIA DE ENTRADA	1	1				
21	93210–19MJ3	O-RING ANILLO O	1	1				
22	95895–06016	BOLT, FLANGE TORNILLO DE REBORDE	1	1				

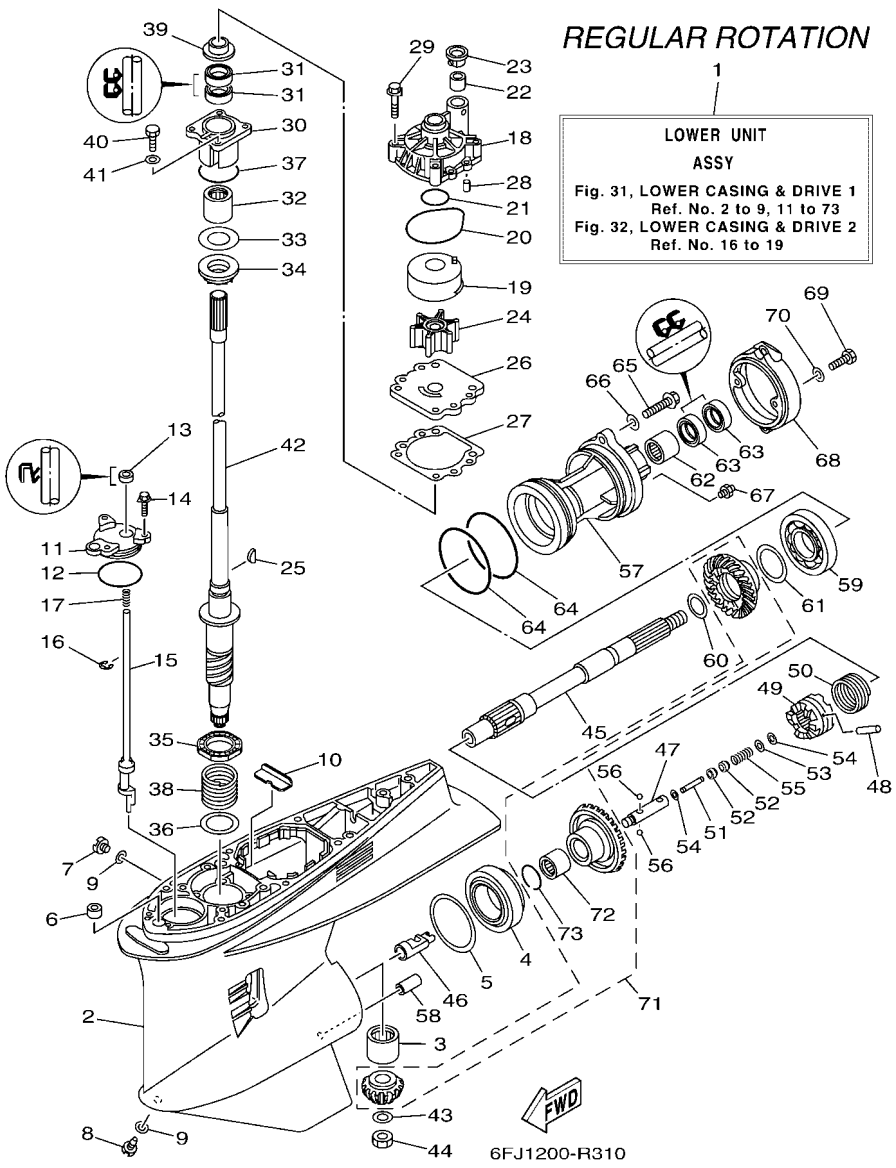

FIG. 31 LOWER CASING & DRIVE 1 — IMPULSOR E INFERIOR 1

REF. NO.	PART NO. CODIGO Nº	DESCRIPTION DESCRIPCION	6FJ1	6FK1				REMARKS OBSERVACIONES
1	6FJ–45300–00–8D	LOWER UNIT ASSY CONJUNTO UNIDAD INFERIOR	1					X(25.3"),RH X(25.3"),RH
	6FJ–45300–10–8D	LOWER UNIT ASSY CONJUNTO UNIDAD INFERIOR	1					U(30.3"),RH U(30.3"),RH
2	6DX–45301–00–8D	CASING, LOWER FUNDA INFERIOR COMPLETA	1					
3	93311–83280	BEARING COJINETE DE RODILLOS	1					
4	93332–000W1	BEARING COJINETE	1					
5	61A–45567–00	SHIM (T:0.10MM) LAINA (T:0.10MM)	1					UR UR
	61A–45567–10	SHIM (T:0.12MM) LAINA (T:0.12MM)	1					UR UR
	61A–45567–20	SHIM (T:0.15MM) LAINA (T:0.15MM)	1					UR UR
	61A–45567–30	SHIM (T:0.18MM) LAINA (T:0.18MM)	1					UR UR
	61A–45567–40	SHIM (T:0.30MM) LAINA (T:0.30MM)	1					UR UR
	61A–45567–50	SHIM (T:0.40MM) LAINA (T:0.40MM)	1					UR UR
	61A–45567–60	SHIM (T:0.50MM) LAINA (T:0.50MM)	1					UR UR
6	663–44366–00	DAMPER, WATER SEAL 2 GOMA DEL SELLO DE AGUA 2	1					
7	90340–08002	PLUG, STRAIGHT SCREW TORNILLO, DE DRENAJE	1					
8	688–45341–10	PLUG, DRAIN TAPON, DREN	1					
9	90430–08003	GASKET JUNTA	2					
10	61A–45376–00	GUIDE, SEAL DAMPER GUIA DE SELLO GOMA	1					
11	61A–45321–01	PLATE PLACA	1					
12	93210–64488	O-RING ANILLO O	1					
13	93106–09014	OIL SEAL SELLO ACEITE	1					
14	90119–06M10	BOLT, WITH WASHER TORNILLO CON ARANDELA	3					
15	69J–44150–00	SHIFT CAM ASSY CONJUNTO EJE LEVA COMPL.	1					
16	99001–08600	CIRCLIP PRESILLA REDONDA	1					
17	90501–11M10	SPRING, COMPRESSION RESORTE DE COMPRESION	1					
18	61A–44311–01	HOUSING, WATER PUMP CAJA BOMBA DE AGUA	1					
19	6R3–44322–42	INSERT, CARTRIDGE CARTUCHO	1					FOR CHROMATE FOR CHROMATE
20	93210–86M38	O-RING ANILLO O	1					

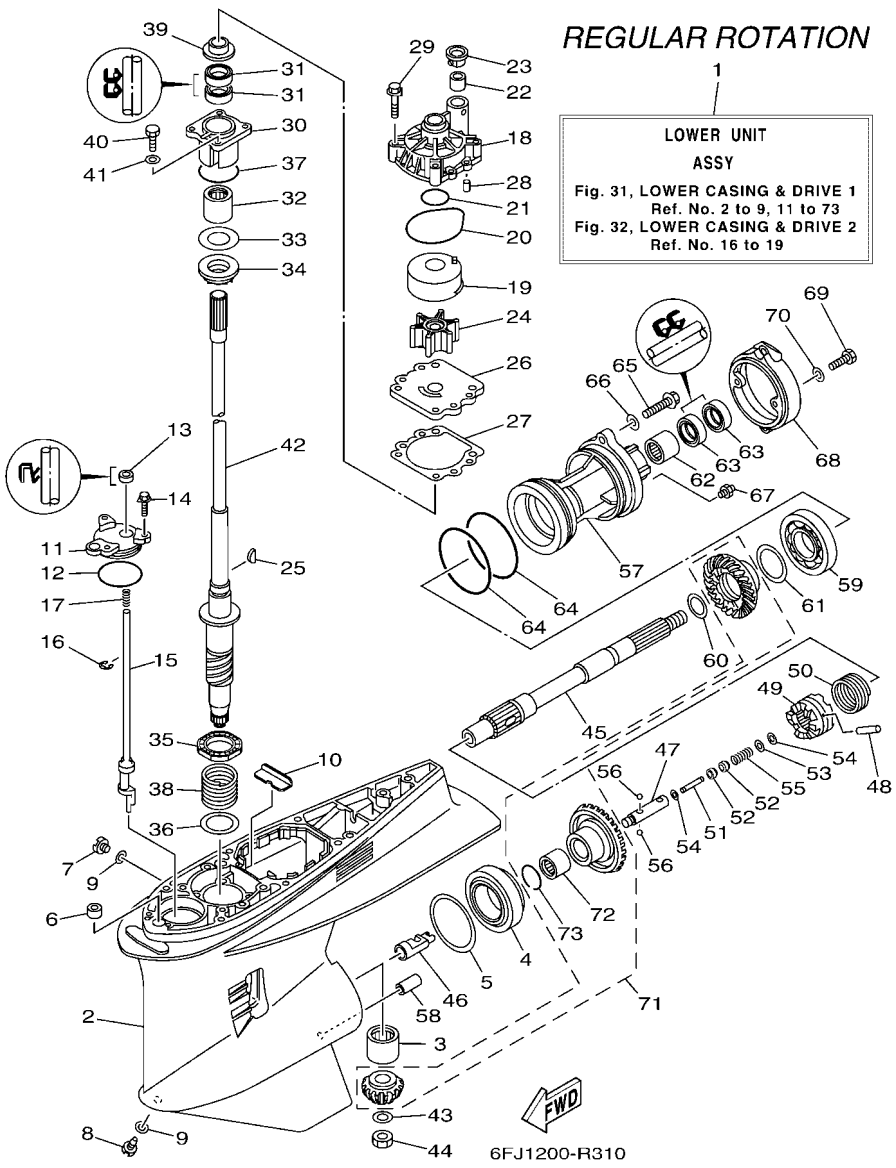

FIG. 31 LOWER CASING & DRIVE 1 — IMPULSOR E INFERIOR 1

REF. NO.	PART NO. CODIGO Nº	DESCRIPTION DESCRIPCION	6FJ1	6FK1				REMARKS OBSERVACIONES
21	93210–37160	O-RING ANILLO O	1					
22	6E5–44365–00	DAMPER, WATER SEAL 1 HULE DE SELLO DE AGUA 1	1					
23	6E5–44312–00	COVER, WATER PUMP HOUSING CUBIERTA CAJA BOMBA DE AGUA	1					
24	6E5–44352–01	IMPELLER IMPULSOR	1					
25	90280–04M05	KEY, WOODRUFF CUNA WOODRUFF	1					
26	6G5–44323–41	OUTER PLATE, CARTRIDGE PLACA EXTERIOR DEL CARTUCHO	1					FOR CHROMATE FOR CHROMATE
27	6E5–44315–A0	GASKET, WATER PUMP EMPAQUE	1					
28	93606–12019	PIN, DOWEL PASADOR DE CLAVIJA	2					
29	90119–08M14	BOLT, WITH WASHER TORNILLO CON ARANDELA	4					
30	61A–45331–00–9S	HOUSING, BEARING CAJA DE COJINETE	1					
31	93101–28M16	OIL SEAL SELLO ACEITE	2					
32	93317–330U2	BEARING COJINETE	1					
33	61A–45587–00	SHIM (T:0.10MM) LAINA (T:0.10MM)	1					UR UR
	61A–45587–10	SHIM (T:0.12MM) LAINA (T:0.12MM)	1					UR UR
	61A–45587–20	SHIM (T:0.15MM) LAINA (T:0.15MM)	1					UR UR
	61A–45587–30	SHIM (T:0.18MM) LAINA (T:0.18MM)	1					UR UR
	61A–45587–40	SHIM (T:0.30MM) LAINA (T:0.30MM)	1					UR UR
	61A–45587–50	SHIM (T:0.40MM) LAINA (T:0.40MM)	1					UR UR
	61A–45587–60	SHIM (T:0.50MM) LAINA (T:0.50MM)	1					UR UR
34	93341–93020	BEARING COJINETES CON RODAMIENTOS	1					
35	93341–34019	BEARING COJINETES CON RODAMIENTOS	1					
36	90201–42014	WASHER, PLATE ARANDELA PLANA	1					
37	93210–55M14	O-RING ANILLO O	1					
38	90501–450A2	SPRING, COMPRESSION RESORTE DE COMPRESION	1					
39	6E5–45344–00	COVER, OIL SEAL CUBIERTA SELLO ACEITE	1					
40	97095–08025	BOLT PERNO	4					
41	92995–08600	WASHER ARANDELA	4					

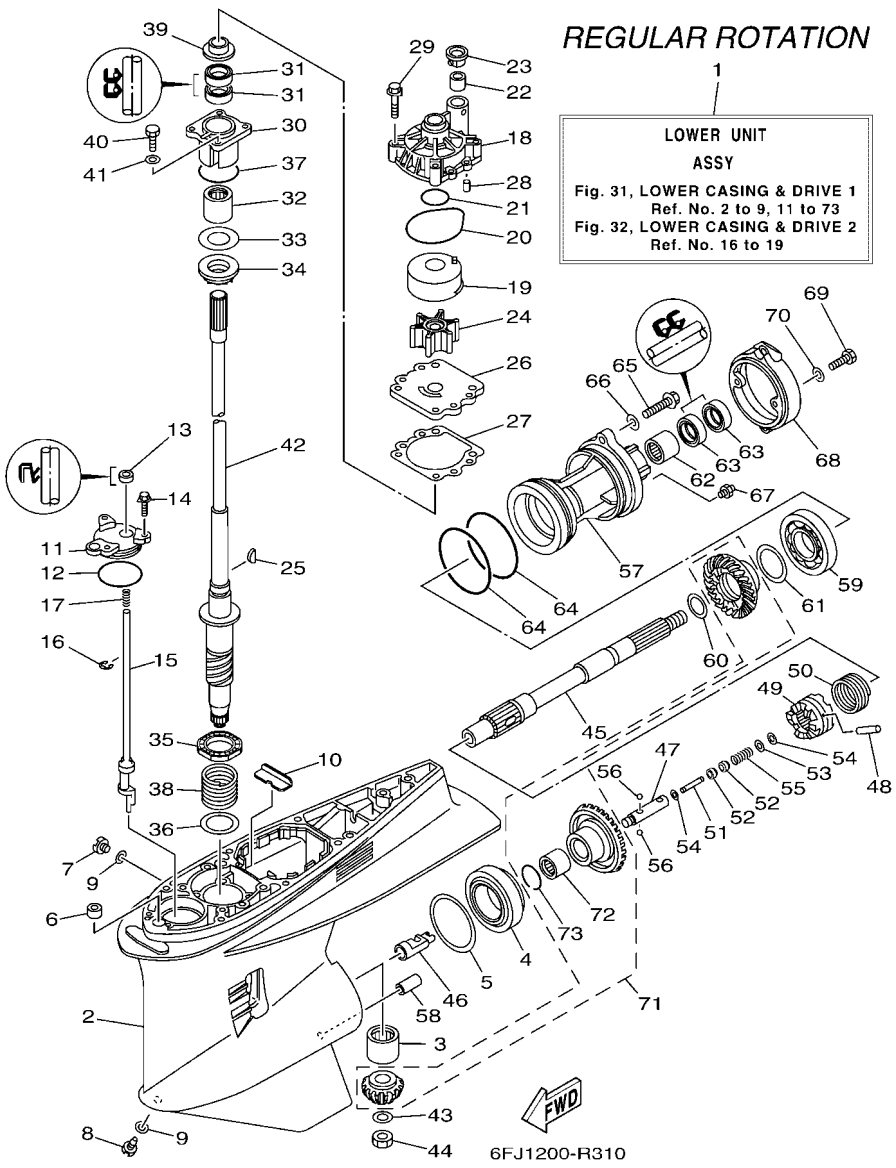

FIG. 31 LOWER CASING & DRIVE 1 — IMPULSOR E INFERIOR 1

REF. NO.	PART NO. CODIGO Nº	DESCRIPTION DESCRIPCION	6FJ1	6FK1				REMARKS OBSERVACIONES
42	6P2–45501–01	DRIVE SHAFT COMP. EJE DE MANDO COMPL.	1					X(25.3") X(25.3")
	6P2–45501–11	DRIVE SHAFT COMP. EJE DE MANDO COMPL.	1					U(30.3") U(30.3")
43	90201–16M00	WASHER, PLATE ARANDELA PLANA	1					
44	90170–16M19	NUT TUERCA	1					
45	69J–45611–00	SHAFT, PROPELLER EJE PROPUSOR	1					
46	61A–45641–02	SHIFTER CAMBIO	1					
47	61A–45634–01	SLIDE, SHIFT DESLIZADOR, CAMBIO	1					
48	61A–45632–00	PIN, CROSS PASADOR TRANSVERSAL	1					
49	69J–45631–00	CLUTCH, DOG EMBRAGUE DE GARRA	1					
50	61A–45633–00	RING, CROSS PIN ANILLO DE PASADOR	1					
51	6H1–45668–00	SHAFT, FREE 1 EJE 1	1					
52	61A–45635–00	PLUNGER, SHIFT EMBOLO DE CAMBIO	2					
53	90201–02M00	WASHER, PLATE ARANDELA PLANA	1					
54	90183–02M03	NUT, SPRING TUERCA DE RESORTE	2					
55	90501–10M77	SPRING, COMPRESSION RESORTE DE COMPRESION	1					
56	93501–04011	BALL BOLA	2					
57	6DX–45332–00	HOUSING, BEARING CAJA BALERO 2	1					
58	99590–10114	PIN, DOWEL PASADOR, DE ESPIGA	1					
59	93306–210U0	BEARING COJINETE	1					
60	6P2–45578–00	SHIM (T:1.80MM) LAINA (T:1.80MM)	1					UR UR
	6P2–45578–10	SHIM (T:1.90MM) LAINA (T:1.90MM)	1					UR UR
	6P2–45578–20	SHIM (T:2.00MM) LAINA (T:2.00MM)	1					UR UR
	6P2–45578–30	SHIM (T:2.10MM) LAINA (T:2.10MM)	1					UR UR
	6P2–45578–40	SHIM (T:2.20MM) LAINA (T:2.20MM)	1					UR UR
61	61A–45577–00	SHIM (T:0.10MM) LAINA (T:0.10MM)	1					UR UR
	61A–45577–10	SHIM (T:0.12MM) LAINA (:0.12MM)	1					UR UR
	61A–45577–20	SHIM (T:0.15MM) LAINA (T:0.15MM)	1					UR UR

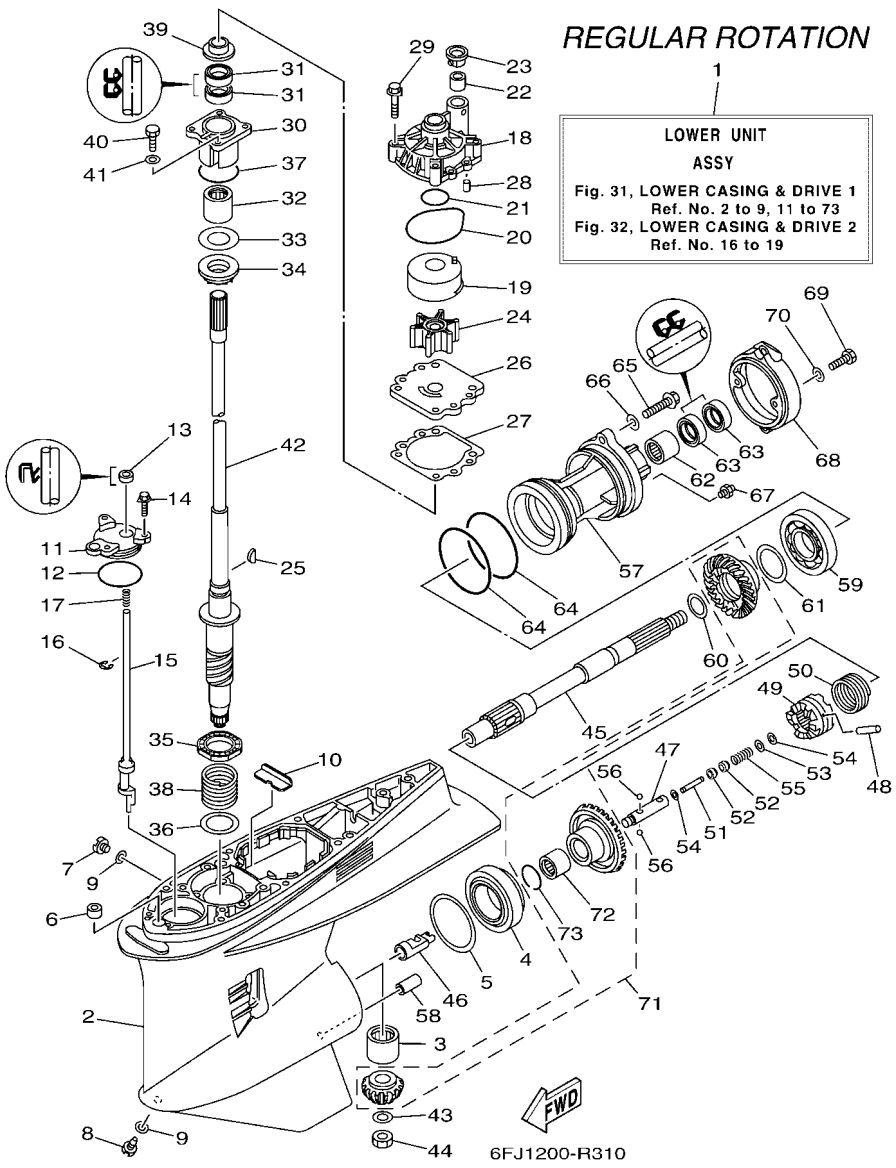

FIG. 31 LOWER CASING & DRIVE 1 — IMPULSOR E INFERIOR 1

REF. NO.	PART NO. CODIGO Nº	DESCRIPTION DESCRIPCION	6FJ1	6FK1				REMARKS OBSERVACIONES
61	61A–45577–30	SHIM (T:0.18MM) LAINA (T:0.18MM)	1					UR UR
	61A–45577–40	SHIM (T:0.30MM) LAINA (T:0.30MM)	1					UR UR
	61A–45577–50	SHIM (T:0.40MM) LAINA (T:0.40MM)	1					UR UR
	61A–45577–60	SHIM (T:0.50MM) LAINA (T:0.50MM)	1					UR UR
62	93315–43064	BEARING COJINETE DE RODILLOS	1					
63	93101–30002	OIL SEAL SELLO ACEITE	2					
64	93211–04384	O-RING ANILLO O	2					
65	90105–08049	BOLT, FLANGE TORNILLO	2					
66	90201–08023	WASHER, PLATE ARANDELA PLANA	2					
67	93700–09M00	NIPPLE, GREASE BOQUILLA DE ENGRASAR	1					
68	6D0–45361–00–8D	CAP, LOWER CASING FUNDA INFERIOR	1					
69	97095–08020	BOLT PERNO	2					
70	92995–08600	WASHER ARANDELA	2					
71	6FJ–45550–00	GEAR SET JUEGO DE ENGRANE	1					
72	93317–62891	.BEARING .COJINETE	1					
73	93450–37097	.CIRCLIP .SEGURO	1					

FIG. 32 LOWER CASING & DRIVE 2 — IMPULSOR E INFERIOR 2

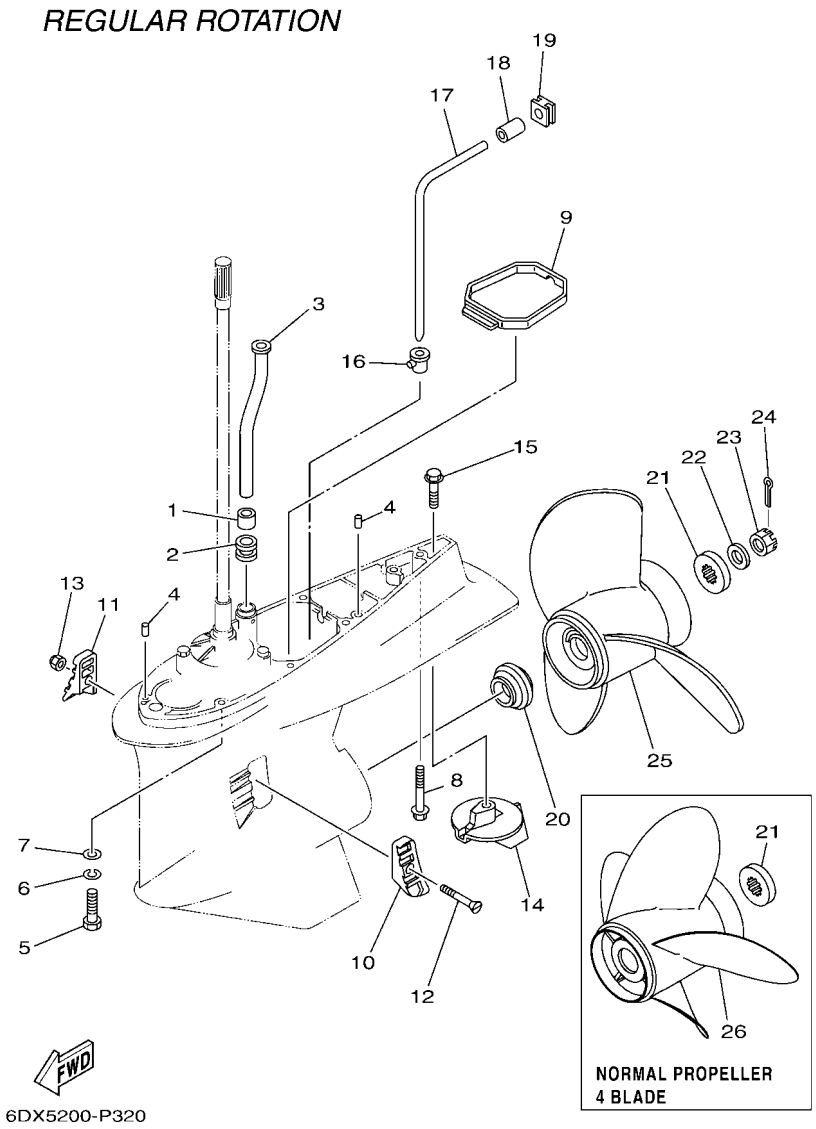

REF. NO.	PART NO. CODIGO Nº	DESCRIPTION DESCRIPCION	6FJ1	6FK1				REMARKS OBSERVACIONES
1	6E5–44365–00	DAMPER, WATER SEAL 1 HULE DE SELLO DE AGUA 1	1					
2	6E5–44366–00	DAMPER, WATER SEAL 2 GOMA DEL SELLO DE AGUA 2	1					
3	6S1–44361–02	TUBE, WATER 1 TUBO DE AGUA 1	1					X(25.3") X(25.3")
	6S1–44361–12	TUBE, WATER 1 TUBO DE AGUA 1	1					U(30.3") U(30.3")
4	93608–12M05	PIN, DOWEL PASADOR DE CLAVIJA	2					
5	97095–10045	BOLT PERNO	7					X(25.3") X(25.3")
6	92995–10100	WASHER ARANDELA	7					X(25.3") X(25.3")
7	92995–10600	WASHER ARANDELA	7					X(25.3") X(25.3")
8	90119–10MA2	BOLT, WITH WASHER TORNILLO CON ARANDELA	1					X(25.3") X(25.3")
	90119–10008	BOLT, WITH WASHER TORNILLO CON ARANDELA	1					U(30.3") U(30.3")
9	6D0–45375–01	DAMPER, SEAL GOMA DE SELLO	1					
10	61A–45214–11	COVER, WATER INLET 1 CUBIERTA ENTRADA AGUA 1	1					
11	61A–45215–11	COVER, WATER INLET 2 CUBIERTA ENTRADA AGUA 2	1					
12	90152–05003	SCREW, COUNTERSUNK TORNILLO EMBUTIDO	1					
13	90185–05002	NUT, NYLON TUERCA AUTOBLOCANTE	1					
14	61A–45371–00	TAB-TRIM QUILLA ESTABILIZADOR	1					
15	90105–10M00	BOLT, FLANGE TORNILLO	1					
16	6D0–44367–00	DAMPER, WATER SEAL 3 GOMA DEL SELLO DE AGUA 3	1					
17	6D0–44362–01	TUBE, WATER 2 TUBO DE AGUA 2	1					
18	6D0–44365–00	DAMPER, WATER SEAL 1 HULE DE SELLO DE AGUA 1	1					
19	6D0–44366–00	DAMPER, WATER SEAL 2 GOMA DEL SELLO DE AGUA 2	1					
20	69J–45987–00	SPACER 1 ESPACIADOR 1	1					
21	688–45997–01	SPACER 2 ESPACIADOR 2	1					
22	92990–18200	WASHER ARANDELA PLANA	1					
23	90171–18M04	NUT, CASTLE TUERCA ENTALLADA	1					
24	91490–40030	PIN. COTTER CHAVETA	1					
25	6G5–45970–02	PROPELLER (3X15-1/4"X15"-M) PROPELA (3X15-1/4"X15"-M)	1					UR NORMAL 3 BLADE UR NORMAL 3 BLADE

FIG. 32 LOWER CASING & DRIVE 2 — IMPULSOR E INFERIOR 2

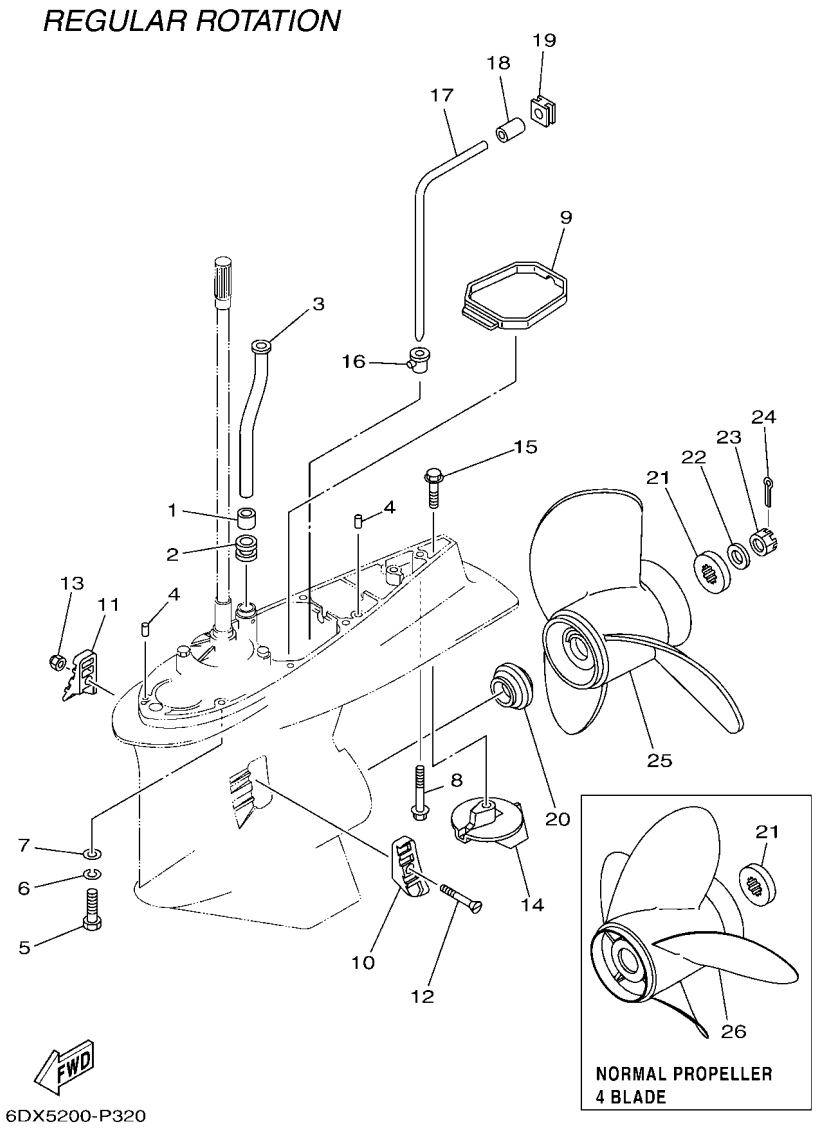

REF. NO.	PART NO. CODIGO Nº	DESCRIPTION DESCRIPCION	6FJ1	6FK1				REMARKS OBSERVACIONES
25	6G5–45978–03	PROPELLER (3X13-3/4"X17"-M2) PROPELA (3X13-3/4"X17"-M2)	1					UR NORMAL 3 BLADE UR NORMAL 3 BLADE
	6G5–45974–03	PROPELLER (3X13-3/4"X19"-M2) PROPELA (3X13-3/4"X19"-M2)	1					UR NORMAL 3 BLADE UR NORMAL 3 BLADE
	6G5–45972–02	PROPELLER (3X13-3/4"X21"-M) PROPELA (3X13-3/4"X21"-M)	1					UR NORMAL 3 BLADE UR NORMAL 3 BLADE
	61A–45978–00	PROPELLER (3X15"X17"-T) PROPELA (3X15"X17"-T)	1					UR NORMAL 3 BLADE UR NORMAL 3 BLADE
	61A–45974–00	PROPELLER (3X14-1/2"X19"-T) PROPELA (3X14-1/2"X19"-T)	1					UR NORMAL 3 BLADE UR NORMAL 3 BLADE
	61A–45972–00	PROPELLER (3X14-1/2"X21"-T) PROPELA (3X14-1/2"X21"-T)	1					UR NORMAL 3 BLADE UR NORMAL 3 BLADE
	6R4–45976–A0	PROPELLER (3X14-1/2"X15"-M) PROPELA (3X14-1/2"X15"-M)	1					UR NORMAL 3 BLADE UR NORMAL 3 BLADE
	6R4–45978–A0	PROPELLER (3X15-1/4"X17"-M) PROPELA (3X15-1/4"X17"-M)	1					UR NORMAL 3 BLADE UR NORMAL 3 BLADE
	6R4–45970–A1	PROPELLER (3X15-1/4"X19"-M) PROPELA (3X15-1/4"X19"-M)	1					UR NORMAL 3 BLADE UR NORMAL 3 BLADE
	6R4–45972–A0	PROPELLER (3X14-7/8"X21"-M) PROPELA (3X14-7/8"X21"-M)	1					UR NORMAL 3 BLADE UR NORMAL 3 BLADE
	6R4–45974–A0	PROPELLER (3X14-1/2"X23"-M) PROPELA (3X14-1/2"X23"-M)	1					UR NORMAL 3 BLADE UR NORMAL 3 BLADE
	6D0–45978–00	PROPELLER (3X15-1/2"X17"-T) PROPELA (3X15-1/2"X17"-T)	1					UR NORMAL 3 BLADE UR NORMAL 3 BLADE
	6D0–45970–00	PROPELLER (3X15-1/4"X19"-T) PROPELA (3X15-1/4"X19"-T)	1					UR NORMAL 3 BLADE UR NORMAL 3 BLADE
	6D0–45972–00	PROPELLER (3X15"X21"-T) PROPELA (3X15"X21"-T)	1					UR NORMAL 3 BLADE UR NORMAL 3 BLADE
26	6BR–45B70–00	PROPELLER (4X15"X21"-T) PROPELA (4X15"X21"-T)	1					UR NORMAL 4 BLADE UR NORMAL 4 BLADE
	6BR–45B72–00	PROPELLER (4X15"X22"-T) PROPELA (4X15"X22"-T)	1					UR NORMAL 4 BLADE UR NORMAL 4 BLADE
	6BR–45B74–00	PROPELLER (4X15"X23"-T) PROPELA (4X15"X23"-T)	1					UR NORMAL 4 BLADE UR NORMAL 4 BLADE

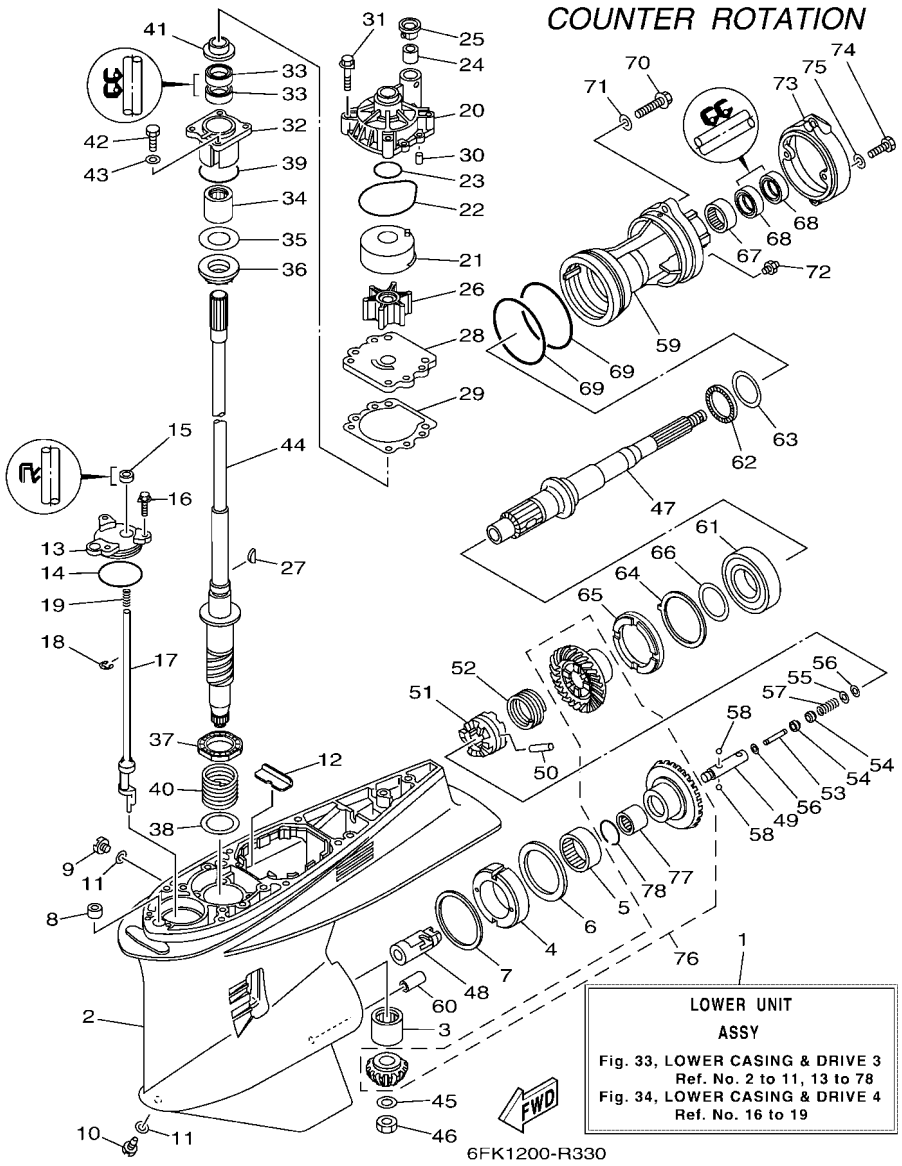

FIG. 33 LOWER CASING & DRIVE 3 — IMPULSOR E INFERIOR 3

REF. NO.	PART NO. CODIGO Nº	DESCRIPTION DESCRIPCION	6FJ1	6FK1				REMARKS OBSERVACIONES
1	6FK–45300–00–8D	LOWER UNIT ASSY CONJUNTO UNIDAD INFERIOR		1				X(25.3"),LH X(25.3"),LH
	6FK–45300–10–8D	LOWER UNIT ASSY CONJUNTO UNIDAD INFERIOR		1				U(30.3"),LH U(30.3"),LH
2	6DX–45301–00–8D	CASING, LOWER FUNDA INFERIOR COMPLETA		1				
3	93311–83280	BEARING COJINETE DE RODILLOS		1				
4	61B–45538–01	SPACER 1 ESPACIADOR 1		1				
5	93315–660W3	BEARING COJINETE DE RODILLOS		1				
6	93341–670V0	BEARING COJINETES CON RODAMIENTOS		1				
7	61A–45567–00	SHIM (T:0.10MM) LAINA (T:0.10MM)		1				UR UR
	61A–45567–10	SHIM (T:0.12MM) LAINA (T:0.12MM)		1				UR UR
	61A–45567–20	SHIM (T:0.15MM) LAINA (T:0.15MM)		1				UR UR
	61A–45567–30	SHIM (T:0.18MM) LAINA (T:0.18MM)		1				UR UR
	61A–45567–40	SHIM (T:0.30MM) LAINA (T:0.30MM)		1				UR UR
	61A–45567–50	SHIM (T:0.40MM) LAINA (T:0.40MM)		1				UR UR
	61A–45567–60	SHIM (T:0.50MM) LAINA (T:0.50MM)		1				UR UR
8	663–44366–00	DAMPER, WATER SEAL 2 GOMA DEL SELLO DE AGUA 2		1				
9	90340–08002	PLUG, STRAIGHT SCREW TORNILLO, DE DRENAJE		1				
10	688–45341–10	PLUG, DRAIN TAPON, DREN		1				
11	90430–08003	GASKET JUNTA		2				
12	61A–45376–00	GUIDE, SEAL DAMPER GUIA DE SELLO GOMA		1				
13	61A–45321–01	PLATE PLACA		1				
14	93210–64488	O-RING ANILLO O		1				
15	93106–09014	OIL SEAL SELLO ACEITE		1				
16	90119–06M10	BOLT, WITH WASHER TORNILLO CON ARANDELA		3				
17	69K–44150–00	SHIFT CAM ASSY CONJUNTO EJE LEVA COMPL.		1				
18	99001–08600	CIRCLIP PRESILLA REDONDA		1				
19	90501–11M10	SPRING, COMPRESSION RESORTE DE COMPRESION		1				
20	61A–44311–01	HOUSING, WATER PUMP CAJA BOMBA DE AGUA		1				

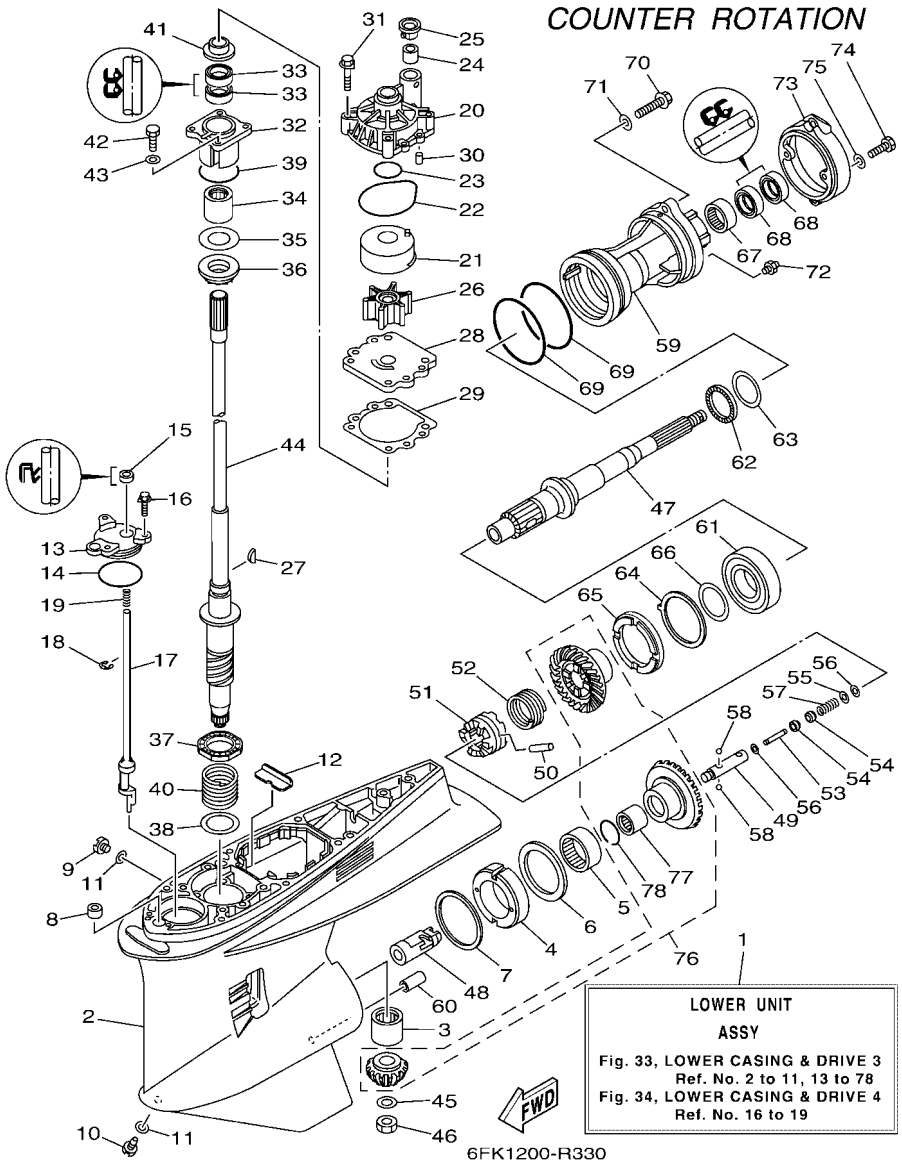

FIG. 33 LOWER CASING & DRIVE 3 — IMPULSOR E INFERIOR 3

REF. NO.	PART NO. CODIGO Nº	DESCRIPTION DESCRIPCION	6FJ1	6FK1				REMARKS OBSERVACIONES
21	6R3–44322–42	INSERT, CARTRIDGE CARTUCHO		1				FOR CHROMATE FOR CHROMATE
22	93210–86M38	O-RING ANILLO O		1				
23	93210–37160	O-RING ANILLO O		1				
24	6E5–44365–00	DAMPER, WATER SEAL 1 HULE DE SELLO DE AGUA 1		1				
25	6E5–44312–00	COVER, WATER PUMP HOUSING CUBIERTA CAJA BOMBA DE AGUA		1				
26	6E5–44352–01	IMPELLER IMPULSOR		1				
27	90280–04M05	KEY, WOODRUFF CUNA WOODRUFF		1				
28	6G5–44323–41	OUTER PLATE, CARTRIDGE PLACA EXTERIOR DEL CARTUCHO		1				FOR CHROMATE FOR CHROMATE
29	6E5–44315–A0	GASKET, WATER PUMP EMPAQUE		1				
30	93606–12019	PIN, DOWEL PASADOR DE CLAVIJA		2				
31	90119–08M14	BOLT, WITH WASHER TORNILLO CON ARANDELA		4				
32	61A–45331–00–9S	HOUSING, BEARING CAJA DE COJINETE		1				
33	93101–28M16	OIL SEAL SELLO ACEITE		2				
34	93317–330U2	BEARING COJINETE		1				
35	61A–45587–00	SHIM (T:0.10MM) LAINA (T:0.10MM)		1				UR UR
	61A–45587–10	SHIM (T:0.12MM) LAINA (T:0.12MM)		1				UR UR
	61A–45587–20	SHIM (T:0.15MM) LAINA (T:0.15MM)		1				UR UR
	61A–45587–30	SHIM (T:0.18MM) LAINA (T:0.18MM)		1				UR UR
	61A–45587–40	SHIM (T:0.30MM) LAINA (T:0.30MM)		1				UR UR
	61A–45587–50	SHIM (T:0.40MM) LAINA (T:0.40MM)		1				UR UR
	61A–45587–60	SHIM (T:0.50MM) LAINA (T:0.50MM)		1				UR UR
36	93341–93020	BEARING COJINETES CON RODAMIENTOS		1				
37	93341–34019	BEARING COJINETES CON RODAMIENTOS		1				
38	90201–42014	WASHER, PLATE ARANDELA PLANA		1				
39	93210–55M14	O-RING ANILLO O		1				
40	90501–450A2	SPRING, COMPRESSION RESORTE DE COMPRESION		1				
41	6E5–45344–00	COVER, OIL SEAL CUBIERTA SELLO ACEITE		1				

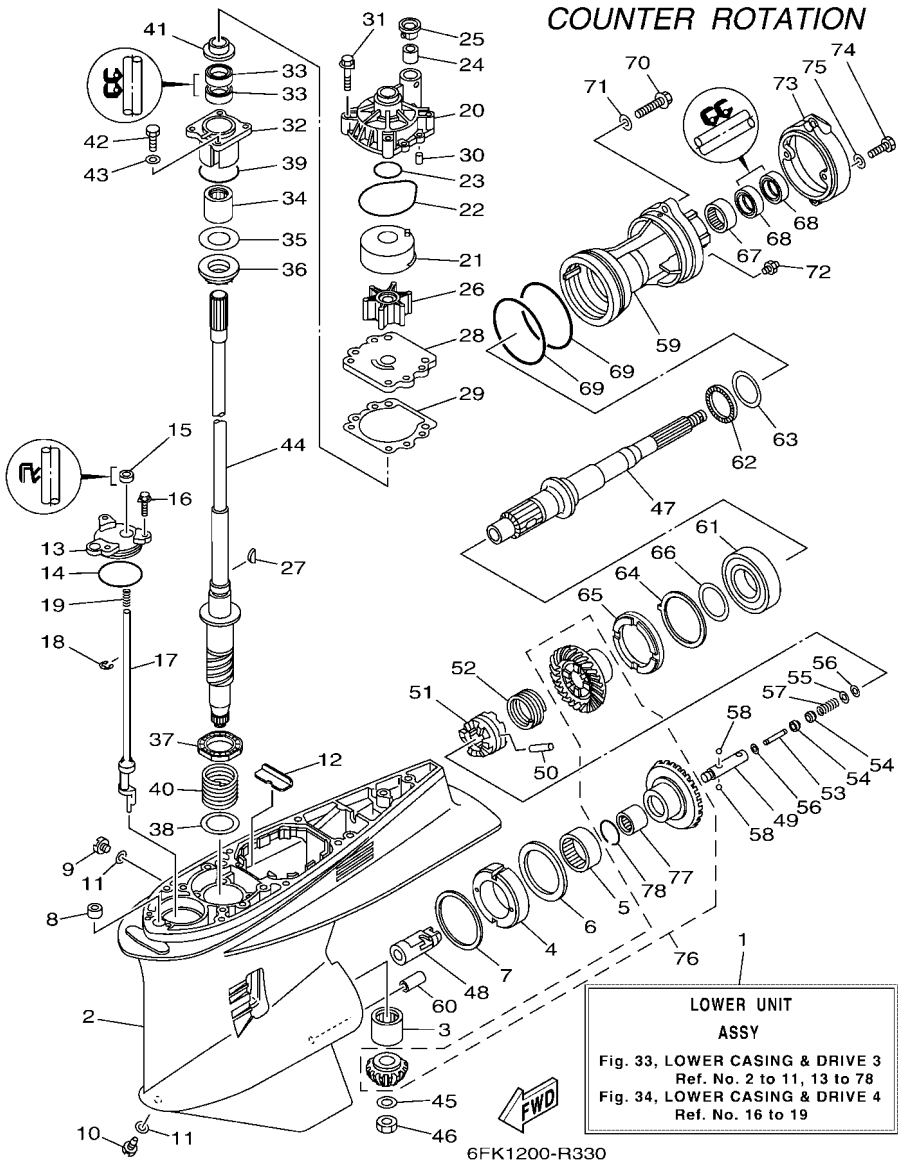

FIG. 33 LOWER CASING & DRIVE 3 — IMPULSOR E INFERIOR 3

REF. NO.	PART NO. CODIGO Nº	DESCRIPTION DESCRIPCION	6FJ1	6FK1				REMARKS OBSERVACIONES
42	97095–08025	BOLT PERNO		4				
43	92995–08600	WASHER ARANDELA		4				
44	6P2–45501–01	DRIVE SHAFT COMP. EJE DE MANDO COMPL.		1				X(25.3") X(25.3")
	6P2–45501–11	DRIVE SHAFT COMP. EJE DE MANDO COMPL.		1				U(30.3") U(30.3")
45	90201–16M00	WASHER, PLATE ARANDELA PLANA		1				
46	90170–16M19	NUT TUERCA		1				
47	69K–45611–00	SHAFT, PROPELLER EJE PROPUSOR		1				
48	61B–45641–01	SHIFTER CAMBIO		1				
49	61A–45634–01	SLIDE, SHIFT DESLIZADOR, CAMBIO		1				
50	61A–45632–00	PIN, CROSS PASADOR TRANSVERSAL		1				
51	69J–45631–00	CLUTCH, DOG EMBRAGUE DE GARRA		1				
52	61A–45633–00	RING, CROSS PIN ANILLO DE PASADOR		1				
53	6H1–45668–00	SHAFT, FREE 1 EJE 1		1				
54	61A–45635–00	PLUNGER, SHIFT EMBOLO DE CAMBIO		2				
55	90201–02M00	WASHER, PLATE ARANDELA PLANA		1				
56	90183–02M03	NUT, SPRING TUERCA DE RESORTE		2				
57	90501–10M77	SPRING, COMPRESSION RESORTE DE COMPRESION		1				
58	93501–04011	BALL BOLA		2				
59	6DY–45332–00	HOUSING, BEARING CAJA BALERO 2		1				
60	99590–10114	PIN, DOWEL PASADOR, DE ESPIGA		1				
61	93332–00048	BEARING COJINETE		1				
62	93341–440U5	BEARING COJINETES CON RODAMIENTOS		1				
63	6K1–45578–01	SHIM (T:0.10MM) LAINA (T:0.10MM)		1				UR UR
	6K1–45578–10	SHIM (T:0.12MM) LAINA (:0.12MM)		1				UR UR
	6K1–45578–20	SHIM (T:0.15MM) LAINA (T:0.15MM)		1				UR UR
	6K1–45578–30	SHIM (T:0.18MM) LAINA (T:0.18MM)		1				UR UR
	6K1–45578–40	SHIM (T:0.30MM) LAINA (T:0.30MM)		1				UR UR

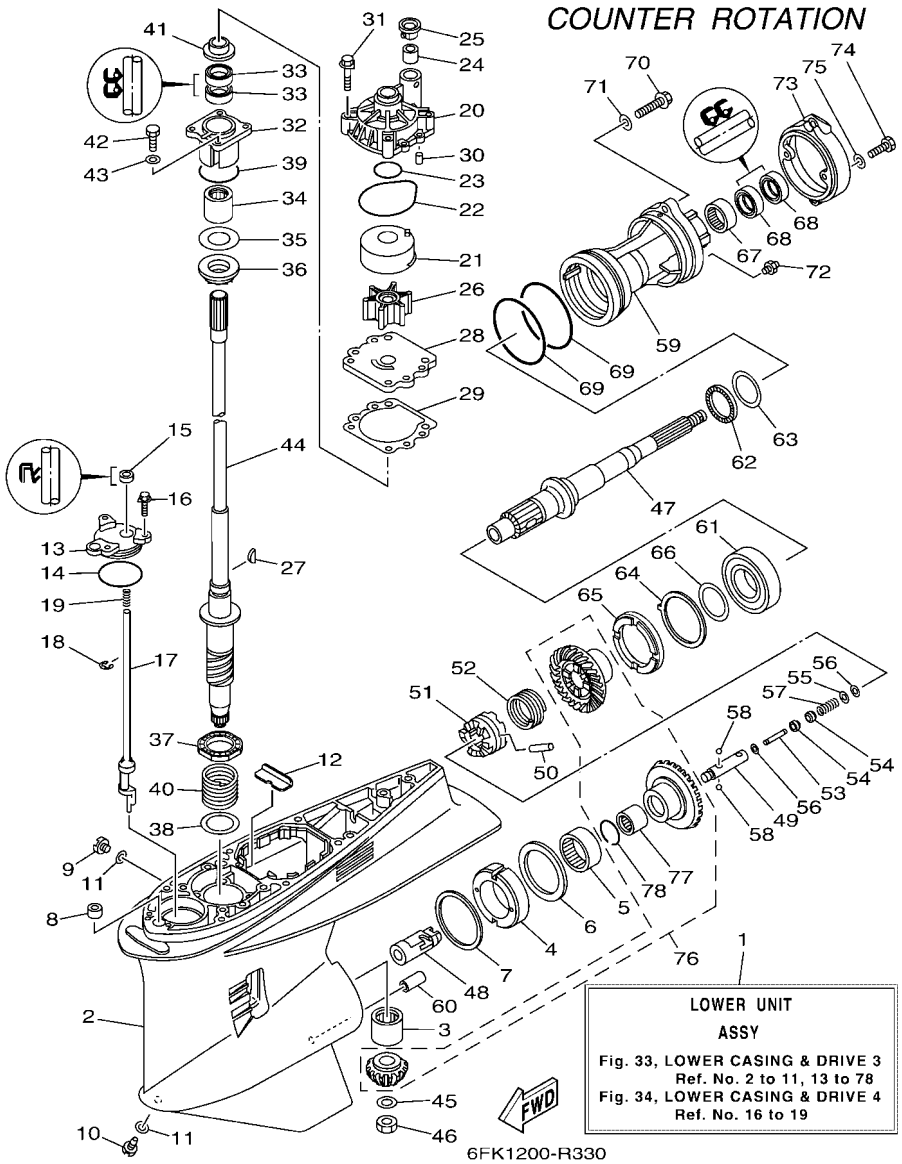

FIG. 33 LOWER CASING & DRIVE 3 — IMPULSOR E INFERIOR 3

REF. NO.	PART NO. CODIGO Nº	DESCRIPTION DESCRIPCION	6FJ1	6FK1				REMARKS OBSERVACIONES
63	6K1–45578–50	SHIM (T:0.40MM) LAINA (T:0.40MM)		1				UR UR
	6K1–45578–60	SHIM (T:0.50MM) LAINA (T:0.50MM)		1				UR UR
64	61B–45383–00	WASHER, CLAW ARANDELA DE UNA		1				
65	6DY–45384–00	NUT TUERCA		1				
66	69K–45577–00	SHIM (T:0.10MM) LAINA (:0.10MM)		1				UR UR
	69K–45577–10	SHIM (T:0.12MM) LAINA (:0.12MM)		1				UR UR
	69K–45577–20	SHIM (T:0.15MM) LAINA (T:0.15MM)		1				UR UR
	69K–45577–30	SHIM (T:0.18MM) LAINA (T:0.18MM)		1				UR UR
	69K–45577–40	SHIM (T:0.30MM) LAINA (T:0.30MM)		1				UR UR
	69K–45577–50	SHIM (T:0.40MM) LAINA (T:0.40MM)		1				UR UR
	69K–45577–60	SHIM (T:0.50MM) LAINA (T:0.50MM)		1				UR UR
67	93315–43064	BEARING COJINETE DE RODILLOS		1				
68	93101–30002	OIL SEAL SELLO ACEITE		2				
69	93211–04384	O-RING ANILLO O		2				
70	90105–08049	BOLT, FLANGE TORNILLO		2				
71	90201–08023	WASHER, PLATE ARANDELA PLANA		2				
72	93700–09M00	NIPPLE, GREASE BOQUILLA DE ENGRASAR		1				
73	6D0–45361–00–8D	CAP, LOWER CASING FUNDA INFERIOR		1				
74	97095–08020	BOLT PERNO		2				
75	92995–08600	WASHER ARANDELA		2				
76	6FK–45550–00	GEAR SET JUEGO DE ENGRANE		1				
77	93317–62891	.BEARING .COJINETE		1				
78	93450–37097	.CIRCLIP .SEGURO		1				

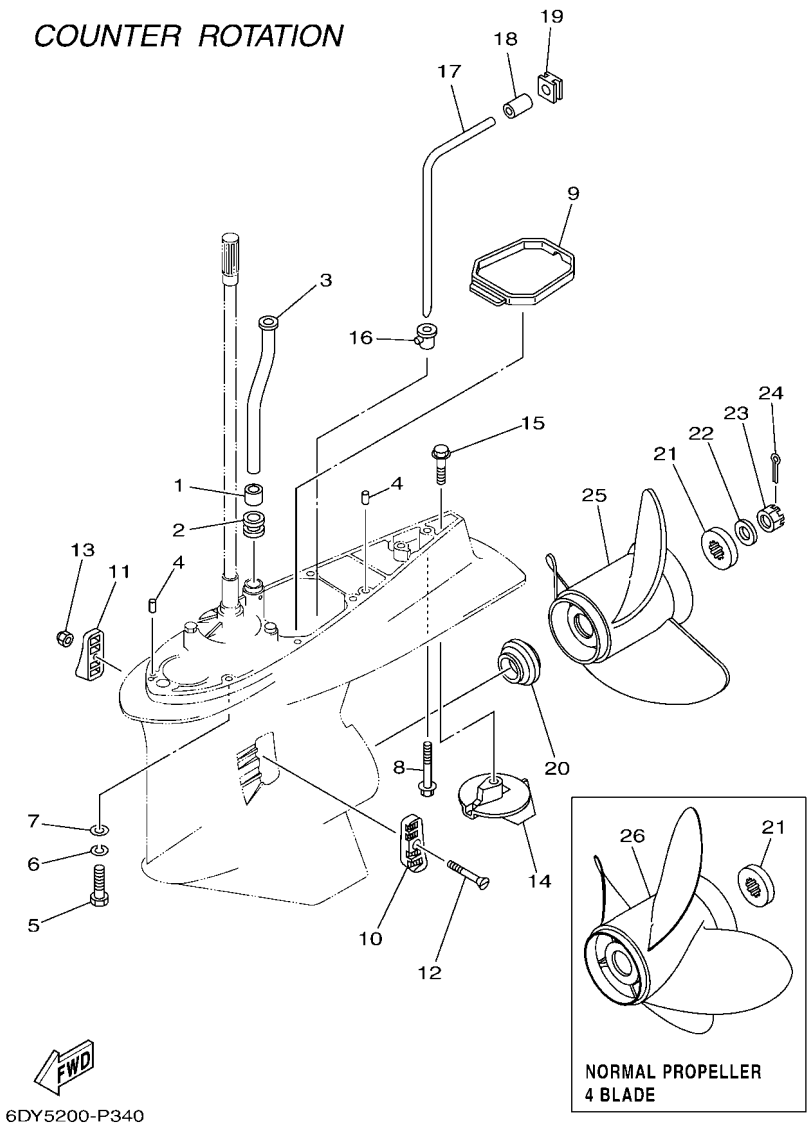

FIG. 34 LOWER CASING & DRIVE 4 — IMPULSOR E INFERIOR 4

REF. NO.	PART NO. CODIGO Nº	DESCRIPTION DESCRIPCION	6FJ1	6FK1				REMARKS OBSERVACIONES
1	6E5–44365–00	DAMPER, WATER SEAL 1 HULE DE SELLO DE AGUA 1		1				
2	6E5–44366–00	DAMPER, WATER SEAL 2 GOMA DEL SELLO DE AGUA 2		1				
3	6S1–44361–02	TUBE, WATER 1 TUBO DE AGUA 1		1				X(25.3") X(25.3")
	6S1–44361–12	TUBE, WATER 1 TUBO DE AGUA 1		1				U(30.3") U(30.3")
4	93608–12M05	PIN, DOWEL PASADOR DE CLAVIJA		2				
5	97095–10045	BOLT PERNO		7				X(25.3") X(25.3")
6	92995–10100	WASHER ARANDELA		7				X(25.3") X(25.3")
7	92995–10600	WASHER ARANDELA		7				X(25.3") X(25.3")
8	90119–10MA2	BOLT, WITH WASHER TORNILLO CON ARANDELA		1				X(25.3") X(25.3")
	90119–10008	BOLT, WITH WASHER TORNILLO CON ARANDELA		1				U(30.3") U(30.3")
9	6D0–45375–01	DAMPER, SEAL GOMA DE SELLO		1				
10	61A–45214–11	COVER, WATER INLET 1 CUBIERTA ENTRADA AGUA 1		1				
11	61A–45215–11	COVER, WATER INLET 2 CUBIERTA ENTRADA AGUA 2		1				
12	90152–05003	SCREW, COUNTERSUNK TORNILLO EMBUTIDO		1				
13	90185–05002	NUT, NYLON TUERCA AUTOBLOCANTE		1				
14	61A–45371–00	TAB-TRIM QUILLA ESTABILIZADOR		1				
15	90105–10M00	BOLT, FLANGE TORNILLO		1				
16	6D0–44367–00	DAMPER, WATER SEAL 3 GOMA DEL SELLO DE AGUA 3		1				
17	6D0–44362–01	TUBE, WATER 2 TUBO DE AGUA 2		1				
18	6D0–44365–00	DAMPER, WATER SEAL 1 HULE DE SELLO DE AGUA 1		1				
19	6D0–44366–00	DAMPER, WATER SEAL 2 GOMA DEL SELLO DE AGUA 2		1				
20	69J–45987–00	SPACER 1 ESPACIADOR 1		1				
21	688–45997–01	SPACER 2 ESPACIADOR 2		1				
22	92990–18200	WASHER ARANDELA PLANA		1				
23	90171–18M04	NUT, CASTLE TUERCA ENTALLADA		1				
24	91490–40030	PIN. COTTER CHAVETA		1				
25	6K1–45970–01	PROPELLER (3X15-1/4"X15"-ML) PROPELA (3X15-1/4"X15"-ML)		1				UR NORMAL 3 BLADE UR NORMAL 3 BLADE

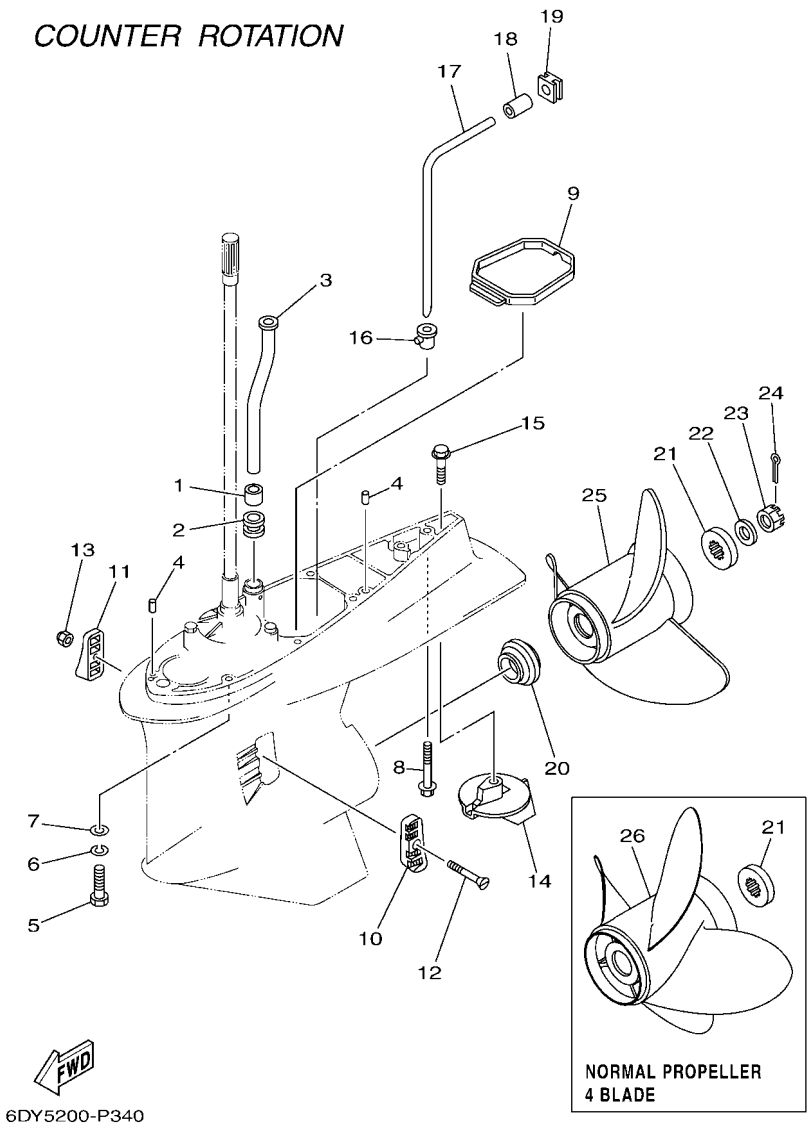

FIG. 34 LOWER CASING & DRIVE 4 — IMPULSOR E INFERIOR 4

REF. NO.	PART NO. CODIGO Nº	DESCRIPTION DESCRIPCION	6FJ1	6FK1				REMARKS OBSERVACIONES
25	6K1–45978–02	PROPELLER (3X13-3/4"X17"-ML1) PROPELA (3X13-3/4"X17"-ML1)		1				UR NORMAL 3 BLADE UR NORMAL 3 BLADE
	6K1–45974–02	PROPELLER (3X13-3/4"X19"-ML1) PROPELA (3X13-3/4"X19"-ML1)		1				UR NORMAL 3 BLADE UR NORMAL 3 BLADE
	6K1–45972–01	PROPELLER (3X13-3/4"X21"-ML) PROPELA (3X13-3/4"X21"-ML)		1				UR NORMAL 3 BLADE UR NORMAL 3 BLADE
	61B–45978–00	PROPELLER (3X15"X17"-TL) PROPELA (3X15"X17"-TL)		1				UR NORMAL 3 BLADE UR NORMAL 3 BLADE
	61B–45974–00	PROPELLER (3X14-1/2"X19"-TL) PROPELA (3X14-1/2"X19"-TL)		1				UR NORMAL 3 BLADE UR NORMAL 3 BLADE
	61B–45972–00	PROPELLER (3X14-1/2"X21"-TL) PROPELA (3X14-1/2"X21"-TL)		1				UR NORMAL 3 BLADE UR NORMAL 3 BLADE
	6R1–45976–A0	PROPELLER (3X15-1/4"X15"-ML) PROPELA (3X15-1/4"X15"-ML)		1				UR NORMAL 3 BLADE UR NORMAL 3 BLADE
	6R1–45978–A0	PROPELLER (3X15-1/4"X17"-ML) PROPELA (3X15-1/4"X17"-ML)		1				UR NORMAL 3 BLADE UR NORMAL 3 BLADE
	6R1–45970–A1	PROPELLER (3X15-1/4"X19"-ML) PROPELA (3X15-1/4"X19"-ML)		1				UR NORMAL 3 BLADE UR NORMAL 3 BLADE
	6R1–45972–A0	PROPELLER (3X14-7/8"X21"-ML) PROPELA (3X14-7/8"X21"-ML)		1				UR NORMAL 3 BLADE UR NORMAL 3 BLADE
	6R1–45974–A0	PROPELLER (3X14-1/2"X23"-ML) PROPELA (3X14-1/2"X23"-ML)		1				UR NORMAL 3 BLADE UR NORMAL 3 BLADE
	6D1–45978–00	PROPELLER (3X15-1/2"X17"-TL) PROPELA (3X15-1/2"X17"-TL)		1				UR NORMAL 3 BLADE UR NORMAL 3 BLADE
	6D1–45970–00	PROPELLER (3X15-1/4"X19"-TL) PROPELA (3X15-1/4"X19"-TL)		1				UR NORMAL 3 BLADE UR NORMAL 3 BLADE
	6D1–45972–00	PROPELLER (3X15"X21"-TL) PROPELA (3X15"X21"-TL)		1				UR NORMAL 3 BLADE UR NORMAL 3 BLADE
26	6BS–45B70–00	PROPELLER (4X15"X21"-TL) PROPELA (4X15"X21"-TL)		1				UR NORMAL 4 BLADE UR NORMAL 4 BLADE
	6BS–45B72–00	PROPELLER (4X15"X22"-TL) PROPELA (4X15"X22"-TL)		1				UR NORMAL 4 BLADE UR NORMAL 4 BLADE
	6BS–45B74–00	PROPELLER (4X15"X23"-TL) PROPELA (4X15"X23"-TL)		1				UR NORMAL 4 BLADE UR NORMAL 4 BLADE

FIG. 35 STEERING GUIDE ATTACHMENT 1 — ADITAMENTO GUIA DE GOBIERNO 1

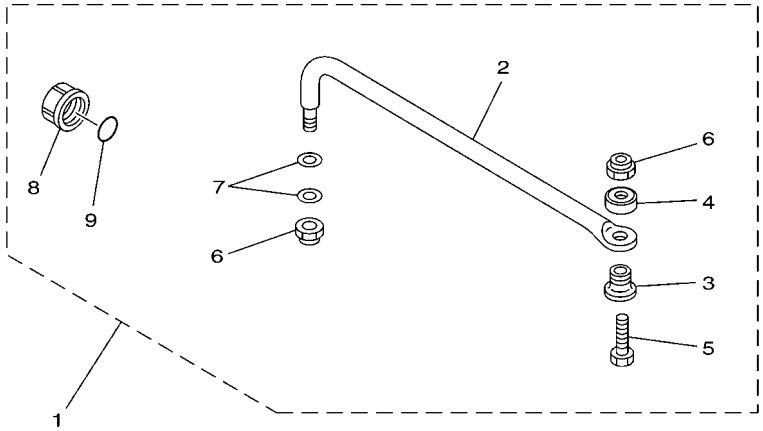

67H0100-9290

REF. NO.	PART NO. CODIGO Nº	DESCRIPTION DESCRIPCION	6FJ1	6FK1				REMARKS OBSERVACIONES
1	6E5–61350–02	STEERING GUIDE ATTACHMENT KIT ESTUCHE ADITAMENTO GUIA DE TIM	1					AP AP
2	6E5–61351–01	.ROD, STEERING LINK .VARILLA ESLABON DIRECCION	1					
3	90387–10M61	.COLLAR .ESPACIADOR	1					
4	90560–12M01	.SPACER .SEPARADOR	1					
5	6E5–61355–00	.BOLT .TORNILLO	1					
6	90185–09M01	.NUT, SELF-LOCKING .TUERCA AUTOBLOCANTE	2					
7	90201–10M20	.WASHER, PLATE .ARANDELA PLANA	2					
8	6E5–43145–01	.CAP, CLAMP BRACKET .TAPA	1					
9	93210–16275	.O-RING .ANILLO O	1					

FIG. 36 STEERING GUIDE ATTACHMENT 2 — ADITAMENTO GUIA DE GOBIERNO 2

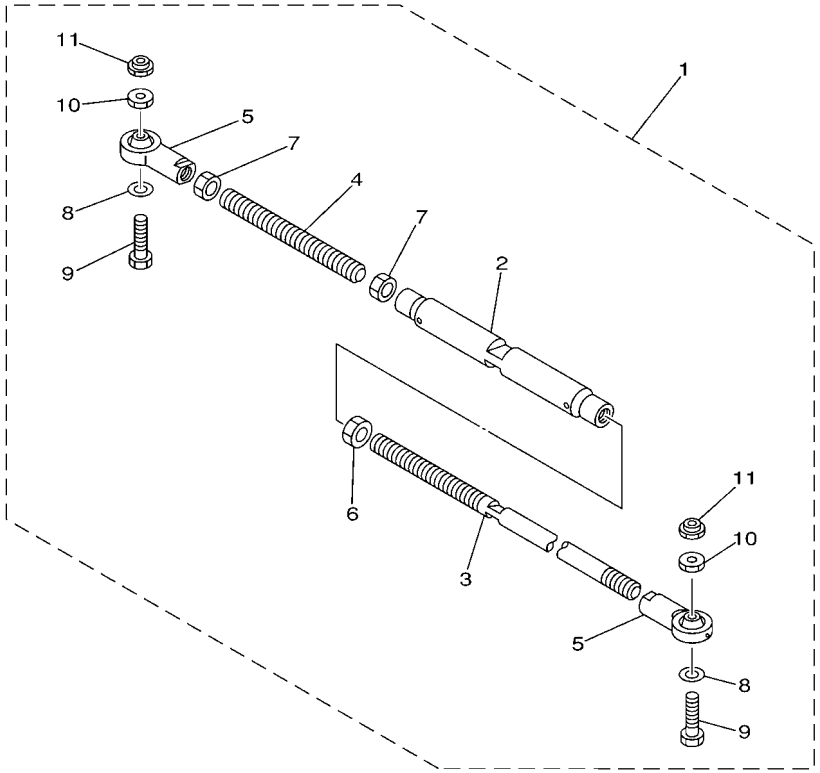

67H0100-0300

REF. NO.	PART NO. CODIGO Nº	DESCRIPTION DESCRIPCION	6FJ1	6FK1				REMARKS OBSERVACIONES
1	6E5–61301–01	TWIN KIT (L:600-800MM) KIT ADITAMENTO (L:600-800MM)		1				AP AP
2	6E5–61313–00	.ADJUSTER .AJUSTADOR		1				
3	6E5–61311–11	.TIE BAR .BARRA SEPARADORA		1				
4	6E5–61315–00	.TIE BAR .ROTOR DE BOMBA AGUA		1				
5	6E5–61303–00	.STEERING AXLE COMP. .OJO-DIRECCION COMPL.		2				
6	90170–14M06	.NUT .TUERCA		1				
7	95380–14700	.NUT .TUERCA		2				
8	90201–10M76	.WASHER, PLATE .ARANDELA PLANA		2				
9	90101–09M70	.BOLT .TORNILLO		2				
10	90170–09M05	.NUT .TUERCA		2				
11	90185–09M01	.NUT, SELF-LOCKING .TUERCA AUTOBLOCANTE		2				

FIG. 37 REMOTE CONTROL BOX — CONTROL REMOTO COMPLETO

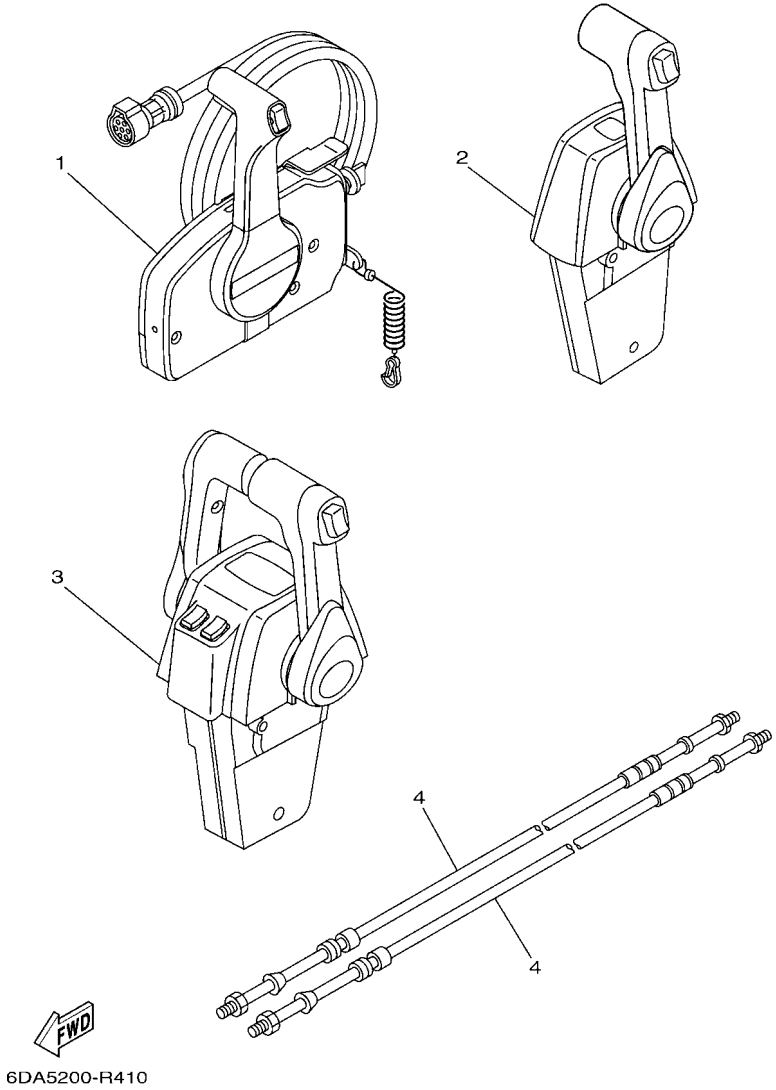

REF. NO.	PART NO. CODIGO Nº	DESCRIPTION DESCRIPCION	6FJ1	6FK1				REMARKS OBSERVACIONES
1	703–48207–22	REMOTE CONTROL ASSY (10P, PTT) REMOTO CONTROL COMPL. (10P)	1					AP CHN WITH PT/T SW. AP CHN WITH PT/T SW.
2	704–48205–R0	REMOTE CONTROL ASSY (R/H) REMOTO CONTROL COMPL. (R/H)	1					AP CAR,OTH WITH PT/T SW. AP CAR,OTH WITH PT/T SW.
3	704–48207–R0	REMOTE CONTROL ASSY REMOTO CONTROL COMPL.		1				AP CAR,OTH WITH PT/T SW. AP CAR,OTH WITH PT/T SW.
4	701–48320–50	CABLE, REMOTE CONTROL L=15F CABLE CONTROL REMOTO L=15F	2	2				UR UR
	701–48320–60	CABLE, REMOTE CONTROL L=16F CABLE CONTROL REMOTO L=16F	2	2				UR UR
	701–48320–80	CABLE, REMOTE CONTROL L=17F CABLE CONTROL REMOTO L=17F	2	2				UR UR
	701–48350–00	CABLE, REMOTE CONTROL L=21F CABLE CONTROL REMOTO L=21F	2	2				UR UR
	701–48350–20	CABLE, REMOTE CONTROL L=23F CABLE CONTROL REMOTO L=23F	2	2				UR UR
	701–48350–80	CABLE, REMOTE CONTROL L=31F CABLE CONTROL REMOTO L=31F	2	2				UR UR

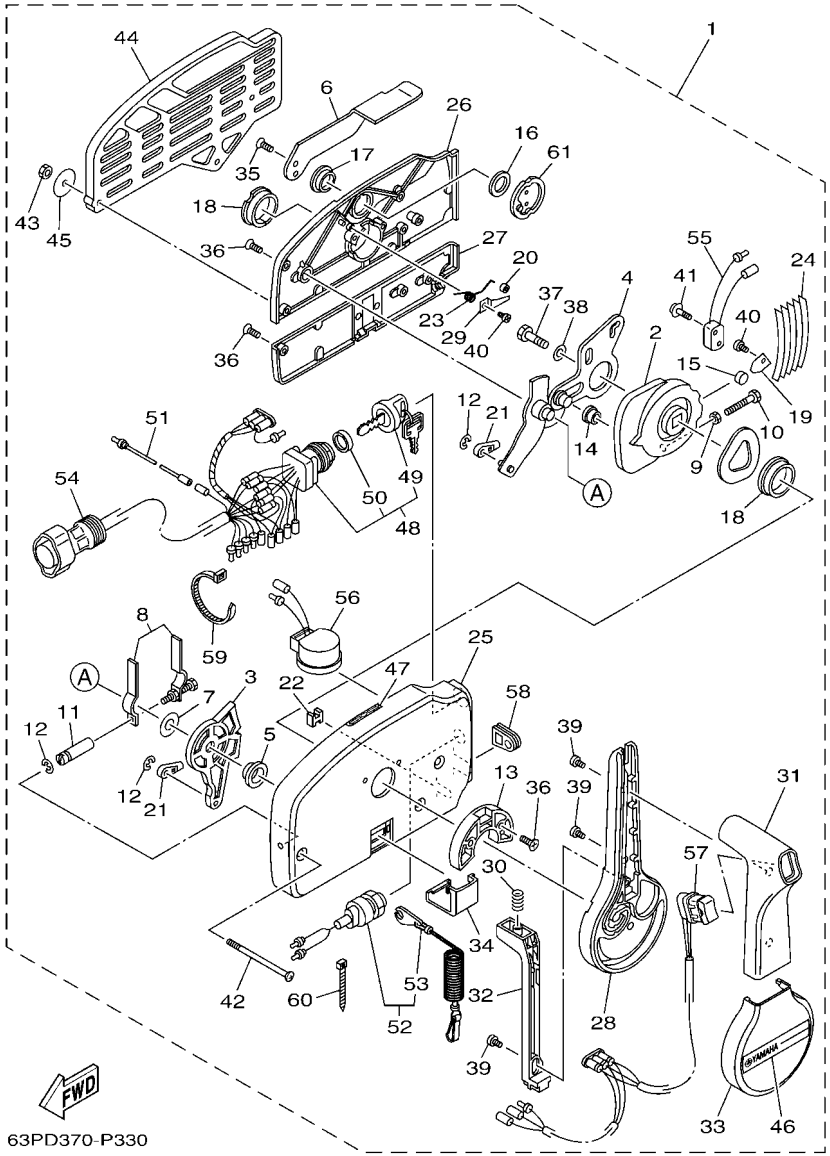

FIG. 38 REMOTE CONTROL ASSY 1 — CONTROL REMOTO COMPL 1

REF. NO.	PART NO. CODIGO Nº	DESCRIPTION DESCRIPCION	6FJ1	6FK1				REMARKS OBSERVACIONES
1	703–48207–22	REMOTE CONTROL ASSY (10P, PTT) REMOTO CONTROL COMPL. (10P)	1					AP CHN WITH PT/T SW. AP CHN WITH PT/T SW.
2	703–48232–00	.GEAR .ENGRANAJE 1	1					
3	703–48271–00	.ARM, SHIFT .BRAZO CAMBIADOR	1					
4	703–48261–01	.ARM, THROTTLE .BRAZO ACELERADOR	1					
5	703–48235–00	.BUSHING .BUJE	1					
6	703–48152–10	.KNOB, FREE ACCEL. .PERILLA	1					
7	703–48268–00	.SPACER .ESPACIADOR 3	1					
8	703–48264–00	.FRICTION, THROTTLE .FRICCION DE ACELERADOR	1					
9	95380–05600	.NUT .TUERCA	1					
10	97380–05025	.BOLT .TORNILLO HEXAGONAL	1					
11	703–48265–10	.SHAFT, FRICTION .EJE FRICCION	1					
12	93430–06024	.CIRCLIP .SEGURO	3					
13	703–48245–00	.PLATE, LOCK .PLACA CERRADURA	1					
14	703–48252–00	.ROLLER, CAM .RODILLO LEVA	1					
15	701–48248–00	.ROLLER, FREE ACCEL. .RODILLO ACELERADOR LIBRE	1					
16	703–48198–00	.WASHER, WAVE .RONDANA ONDULADA 3	1					
17	703–48243–00	.BUSHING .BUJE 3	1					
18	703–48236–00	.BUSHING 1 .BUJE	2					
19	703–48189–00	.RETAINER .RETENEDOR	1					
20	703–48234–00	.ROLLER, DETENT .RODILLO	1					
21	703–48345–01	.CABLE END, REMOTE CONTROL 2 .TERMINAL CABLE DE CONTROL REMO	2					
22	703–48358–00	.ANCHOR, CABLE .ABRAZADERA CABLE	1					
23	703–48244–00	.SPRING, FREE ACCEL. .RESORTE ACELERADOR LIBRE	1					
24	703–48238–00	.SPRING, DETENT .RESORTE	5					
25	703–48211–10	.HOUSING,1 .CAJA	1					
26	703–48212–10	.BACK PLATE 1 .PLACA TRASERA 1	1					
27	703–48213–10	.BACK PLATE 2 .PLACA TRASERA 2	1					

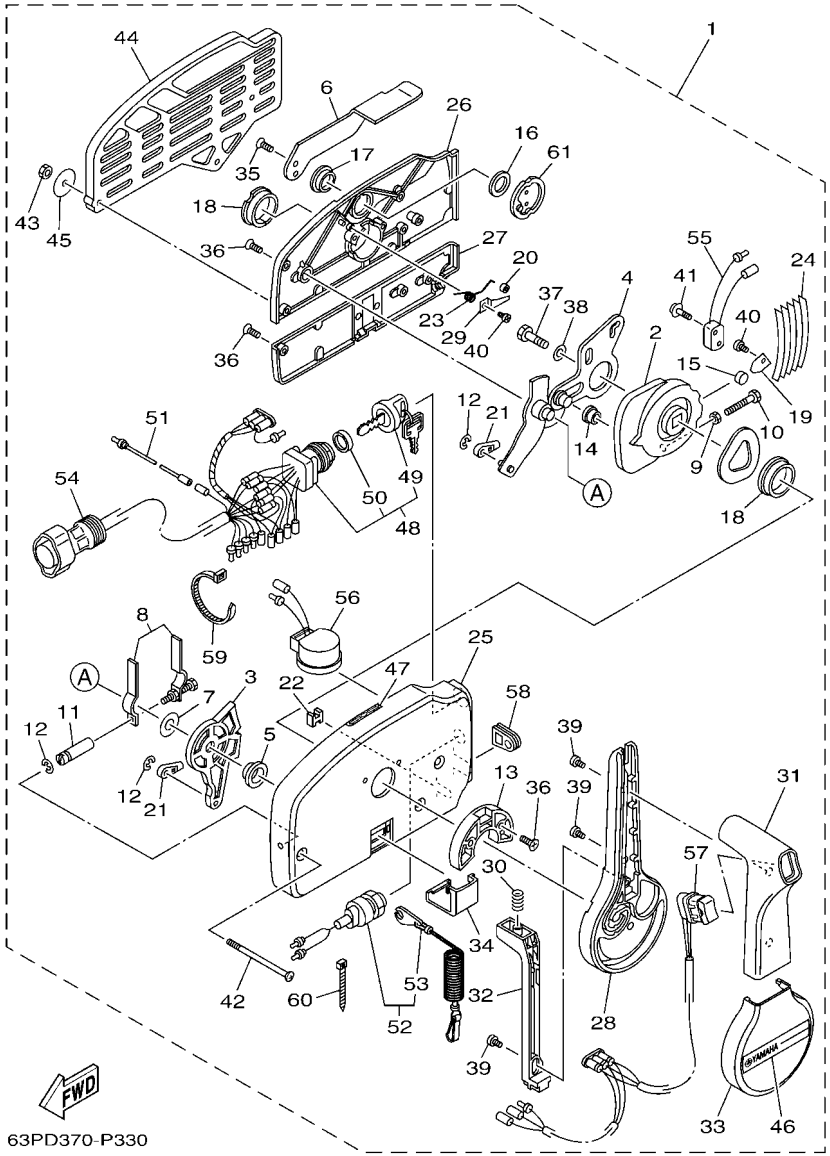

FIG. 38 REMOTE CONTROL ASSY 1 — CONTROL REMOTO COMPL 1

REF. NO.	PART NO. CODIGO Nº	DESCRIPTION DESCRIPCION	6FJ1	6FK1				REMARKS OBSERVACIONES
28	703–48221–10	.LEVER, CONTROL .PALANCA CONTROL	1					
29	703–48246–00	.SPACER .ESPACIADOR	1					
30	703–48227–00	.SPRING, NEUTRAL LOCK .RESORTE DE SEGURO	1					
31	703–48222–20	.GRIP, CONTROL LEVER .MANGO DE PALANCA CONTROL	1					SINGLE SINGLE
32	703–48223–10	.LOCK, NEUTRAL .CERRADURA NEUTRO	1					
33	703–48225–10	.COVER .CUBIERTA	1					
34	703–48219–10	.COVER, LEAD .CUBIERTA	1					
35	703–48281–00	.SCREW .TORNILLO 1	2					
36	703–44189–20	.SCREW .TORNILLO	7					
37	97380–08030	.BOLT .TORNILLO HEXAGONAL	1					
38	92990–08600	.WASHER, PLATE .ARANDELA PLANA	1					
39	703–48128–10	.SCREW 2 .TORNILLO 2	3					
40	98580–04006	.SCREW, PAN HEAD .TORNILLO DE CABEZA CRUZADA	2					
41	703–48129–00	.SCREW 3 .TORNILLO 3	2					
42	703–44189–30	.SCREW .TORNILLO	3					
43	95380–06600	.NUT, HEXAGON .TUERCA	3					
44	703–48293–10	.SPACER, REMOTE CONTROL .ESPACIADOR	1					SINGLE SINGLE
45	701–48287–00	.WASHER .ARANDELA	3					
46	703–48215–10	.GRAPHIC .CALCOMANIA 1	1					
47	6X3–44191–00	.INDICATOR, SHIFT .INDICADOR DE CAMBIOS	1					
48	703–82510–44	.MAIN SWITCH ASSY .CONJUNTO DE LLAVE IGNICION	1					
49	703–82577–00	..CAP, KEY ..TAPA	1					
50	6K1–82532–00	..CAP ..TAPA	1					
51	703–82531–00	.WIRE, LEAD (L70) .CABLE CONDUCTOR (L70)	1					
52	688–82575–02	.ENGINE STOP SWITCH ASSY .INTERRUPTOR DE PARADA COMPL	1					
53	682–82556–00	..LANYARD, STOP SWITCH ..CORDON DE INTERRUPTOR PARADA	1					
54	688–8258A–20	.EXTENSION, WIRE HARNESS (4.9M) .EXTENSION, ARNES DE CABLES (4.	1					(10P) (10P)

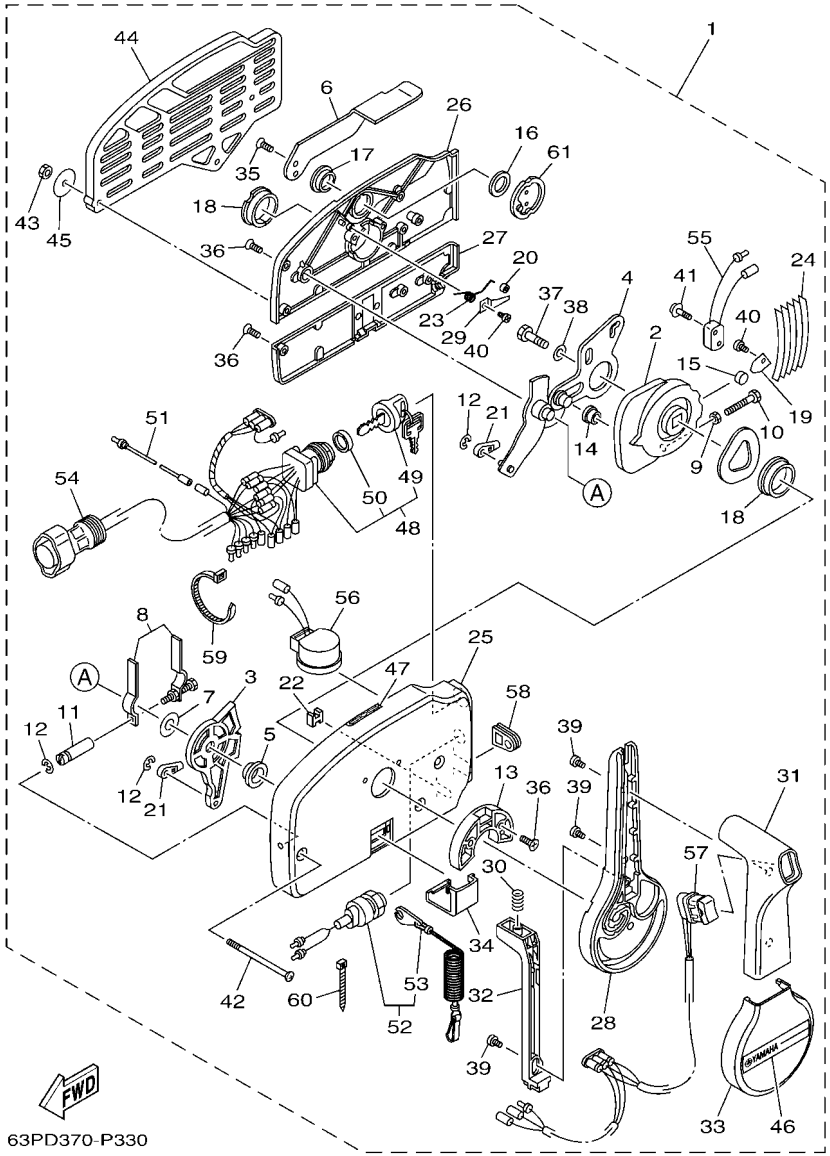

FIG. 38 REMOTE CONTROL ASSY 1 — CONTROL REMOTO COMPL 1

REF. NO.	PART NO. CODIGO Nº	DESCRIPTION DESCRIPCION	6FJ1	6FK1				REMARKS OBSERVACIONES
55	703–82540–00	.NEUTRAL SWITCH ASSY .INTERRUPTOR NEUTRAL COMPL	1					
56	703–83383–11	.BUZZER .ZUMBADOR	1					
57	703–82563–21	.TRIM & TILT SWITCH ASSY .INTERRUPTOR DE INCLINACION	1					
58	703–48284–10	.GROMMET .TAPON	1					
59	703–82591–00	.BAND .BANDA	1					
60	703–82592–00	.BAND .BANDA	1					
61	703–48153–00	.SHAFT, FREE ACCEL. .EJE	1					

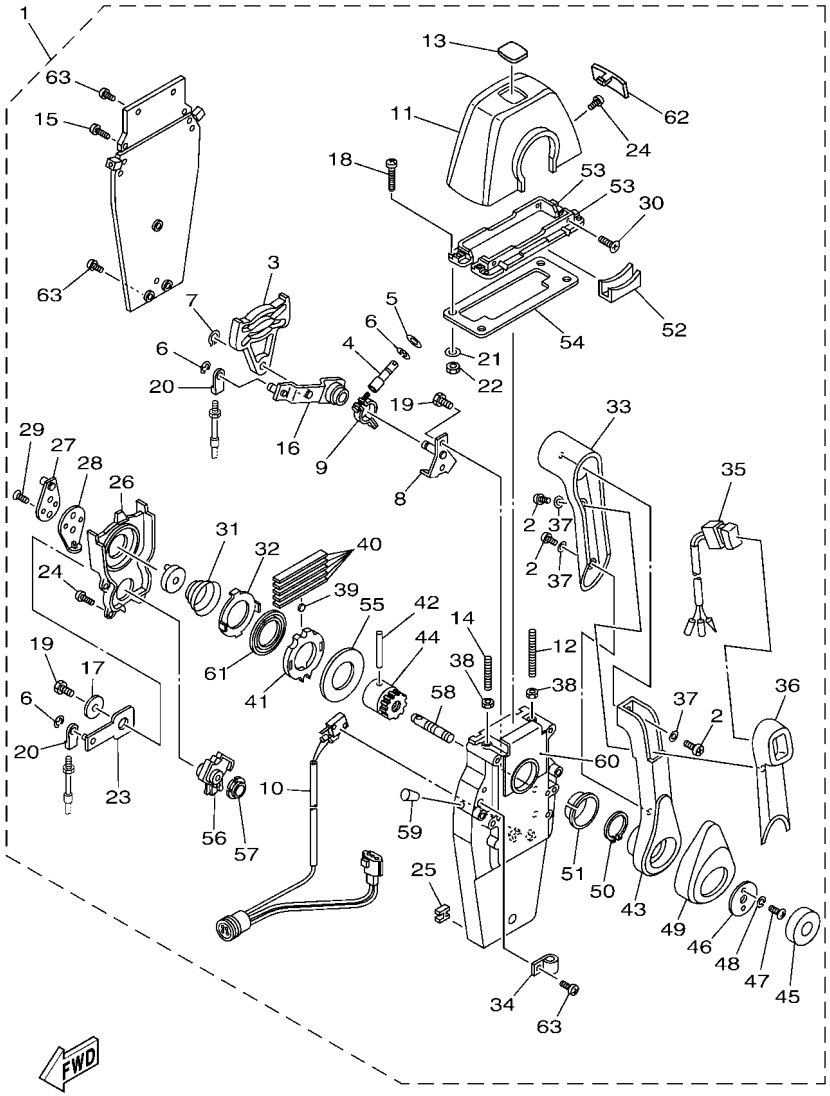

6DA5200-R430

FIG. 39 REMOTE CONTROL ASSY 2 — CONTROL REMOTO COMPL 2

REF. NO.	PART NO. CODIGO Nº	DESCRIPTION DESCRIPCION	6FJ1	6FK1				REMARKS OBSERVACIONES
1	704–48205–R0	REMOTE CONTROL ASSY (R/H) REMOTO CONTROL COMPL. (R/H)	1					AP CAR,OTH WITH PT/T SW. AP CAR,OTH WITH PT/T SW.
2	704–48129–10	.SCREW 3 .TORNILLO 3	3					
3	EL8–48251–00	.PLATE, CAM .PLACA,LEVA	1					
4	704–48265–00	.SHAFT, FRICTION .EJE FRICCION	1					
5	701–48246–00	.SPACER .ESPACIADOR	1					
6	93430–06024	.CIRCLIP .SEGURO	4					
7	EL8–48259–00	.CIRCLIP 1 .SEGURO	1					
8	704–48262–00	.SHAFT, THROTTLE .EJE DE ACELERADOR	1					
9	704–48264–00	.THROTTLE, FRICTION .FRICCION DE ACELERADOR	1					
10	704–82540–40	.NEUTRAL SWITCH ASSY .INTERRUPTOR NEUTRAL COMPL	1					
11	704–48119–50	.COVER .CUBIERTA	1					
12	EL8–48281–00	.SCREW .TORNILLO 1	1					
13	704–48215–60	.GRAPHIC .CALCOMANIA 1	1					
14	704–48281–00	.SCREW .TORNILLO 1	1					
15	97890–05025	.SCREW, PAN HEAD .TORNILLO	2					
16	704–48261–00	.ARM, THROTTLE .BRAZO ACELERADOR	1					
17	EL8–48191–00	.WASHER 1 .ARANDELA	1					
18	704–48283–00	.SCREW .TORNILLO 3	4					
19	97380–06018	.BOLT .TORNILLO HEXAGONAL	3					
20	703–48345–01	.CABLE END, REMOTE CONTROL 2 .TERMINAL CABLE DE CONTROL REMO	2					
21	704–48287–00	.WASHER .ARANDELA	4					
22	95380–05600	.NUT .TUERCA	4					
23	704–48271–00	.ARM, SHIFT .BRAZO CAMBIADOR	1					
24	EL8–48127–00	.SCREW 1 .TORNILLO 1	10					
25	703–48358–00	.ANCHOR, CABLE .ABRAZADERA CABLE	1					
26	704–48231–00	.HOUSING, GEAR .CAJA,ENGRANAJE	1					
27	EL8–48241–00	.ARM, DRIVE .BRAZO,MANDO	1					

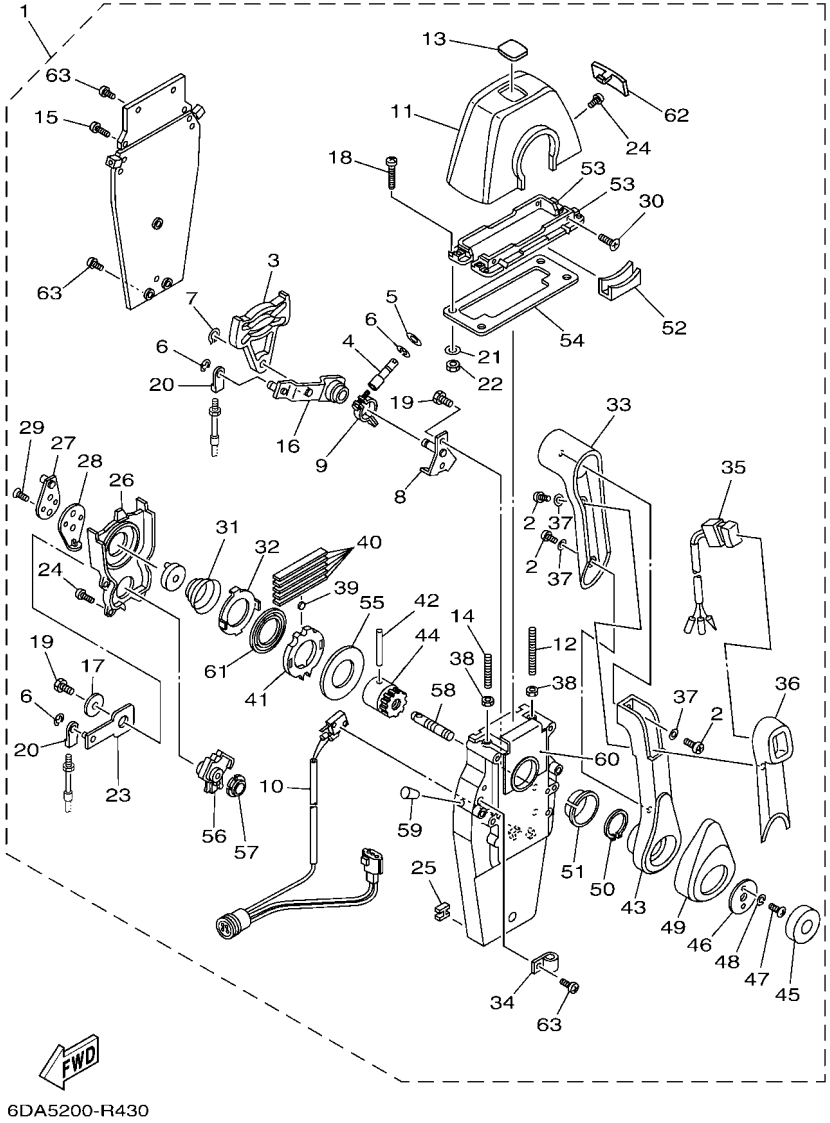

FIG. 39 REMOTE CONTROL ASSY 2 — CONTROL REMOTO COMPL 2

REF. NO.	PART NO. CODIGO Nº	DESCRIPTION DESCRIPCION	6FJ1	6FK1				REMARKS OBSERVACIONES
28	EL8–48254–00	.STOPPER, THROTTLE ADJUSTING .TAPON	1					
29	92780–06020	.SCREW, FLAT HEAD .TORNILLO CABEZA PLANA	2					
30	98780–05018	.SCREW, FLAT HEAD .TORNILLO CABEZA PLANA	4					
31	EL8–48244–00	.SPRING, FREE ACCEL. .RESORTE ACELERADOR LIBRE	1					
32	EL8–48245–00	.PLATE, LOCK .PLACA CERRADURA	1					
33	704–48222–10	.GRIP, CONTROL LEVER .MANGO DE PALANCA CONTROL	1					
34	704–82594–00	.CLAMP .GRAMPA	1					
35	704–82563–60	.TRIM & TILT SWITCH ASSY .INTERRUPTOR DE INCLINACION	1					
36	704–48229–10	.GRIP, CONTROL LEVER .MANGO DE PALANCA CONTROL 2	1					
37	92990–05300	.WASHER, INTERNAL TOOTH .ARANDELA PLANA	3					
38	95380–06600	.NUT, HEXAGON .TUERCA	2					
39	701–48248–00	.ROLLER, FREE ACCEL. .RODILLO ACELERADOR LIBRE	1					
40	704–48238–00	.SPRING, DETENT .RESORTE	5					
41	704–48232–P1	.GEAR .ENGRANAJE 1	1					
42	EL8–48164–00	.PIN 2 .PASADOR 2	1					
43	704–48221–R0	.LEVER, CONTROL .PALANCA CONTROL	1					
44	704–48242–10	.SHAFT, DRIVE .EJE, PROPULSION	1					
45	704–48225–R0	.COVER .CUBIERTA	1					
46	704–48192–00	.WASHER 2 .RONDANA 2	1					
47	97890–06018	.SCREW, PAN HEAD .TORNILLO	2					
48	92990–06300	.WASHER, INTERNAL TOOTH .ARANDELA PLANA	2					
49	704–48224–R0	.COVER, CONTROL LEVER .CUBIERTA DE PALANCA CONTROL	1					
50	EL8–48279–00	.CIRCLIP 2 .SEGURO2	1					
51	704–48234–00	.BUSHING 1 .BUJE	1					
52	704–48219–R0	.COVER, LEAD .CUBIERTA	1					
53	704–48144–10	.PLATE, STOPPER 2 .PLACA, RETEN 2	2					
54	704–48176–00	.GROMMET .TOPON	1					

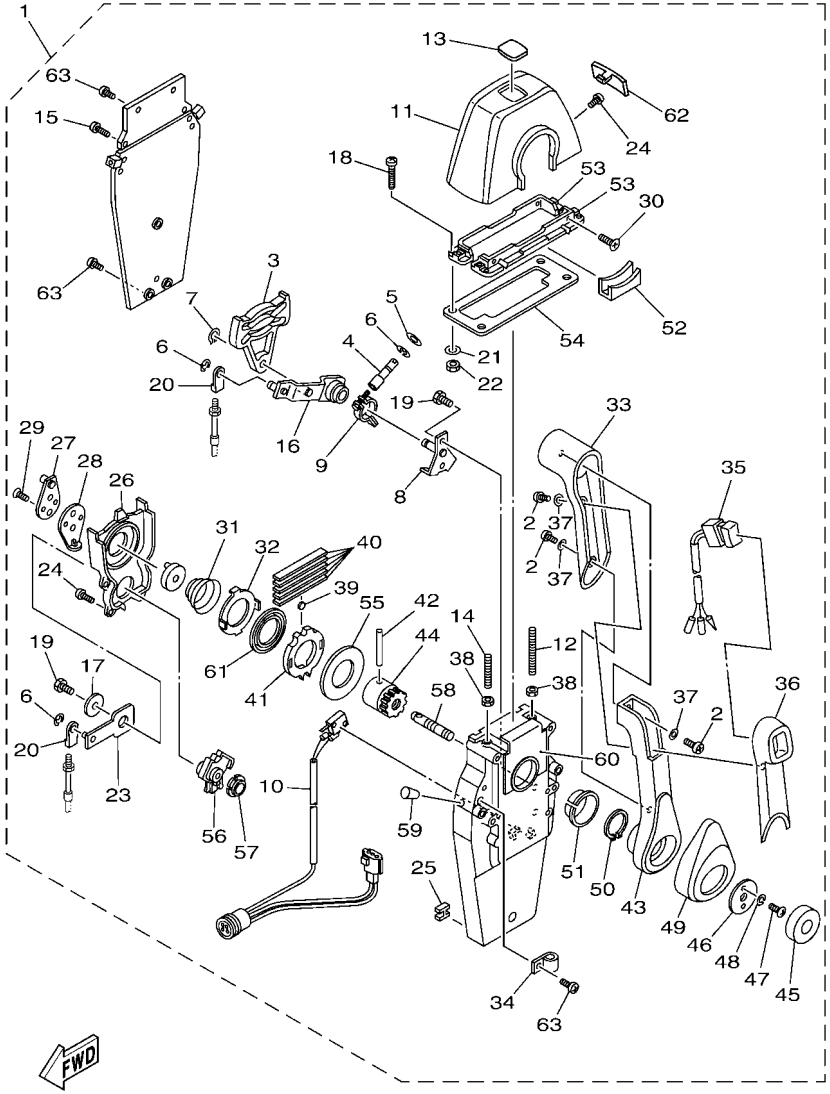

6DA5200-R430

FIG. 39 REMOTE CONTROL ASSY 2 — CONTROL REMOTO COMPL 2

REF. NO.	PART NO. CODIGO Nº	DESCRIPTION DESCRIPCION	6FJ1	6FK1				REMARKS OBSERVACIONES
55	704–48192–P0	.WASHER 2 .RONDANA 2	1					
56	704–48233–00	.GEAR 2 .ENGRANAJE 2	1					
57	704–48235–00	.BUSHING .BUJE	1					
58	704–48153–00	.SHAFT, FREE ACCEL. .EJE	1					
59	704–48166–00	.PLUG .TAPON	1					
60	704–48284–P0	.GROMMET .TAPON	1					
61	704–48178–10	.PLATE, SHIFT .PLACA	1					
62	704–48167–20	.PLUG .TAPON AGUJERO	1					
63	97890–05016	.SCREW, PAN HEAD .TORNILLO	3					

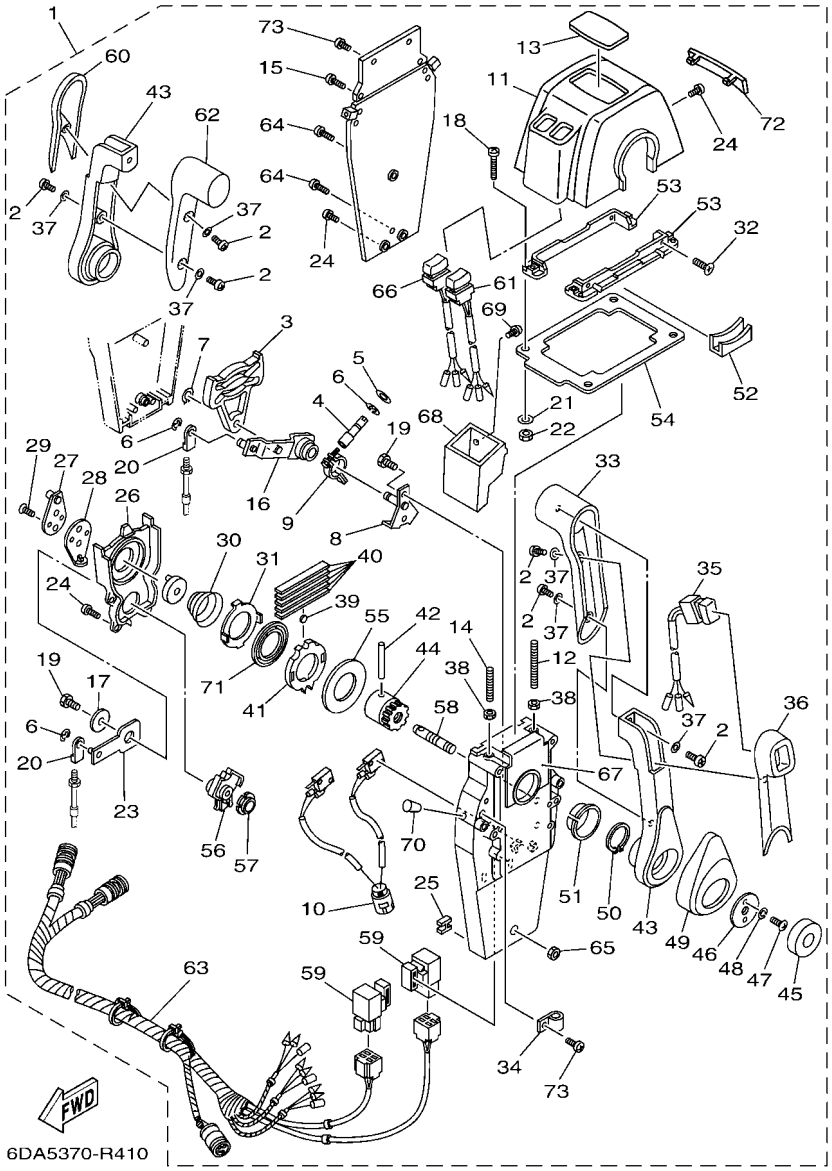

FIG. 40 REMOTE CONTROL ASSY 3 — CONTROL REMOTO COMPL 3

REF. NO.	PART NO. CODIGO Nº	DESCRIPTION DESCRIPCION	6FJ1	6FK1				REMARKS OBSERVACIONES
1	704–48207–R0	REMOTE CONTROL ASSY REMOTO CONTROL COMPL.		1				AP CAR,OTH WITH PT/T SW. AP CAR,OTH WITH PT/T SW.
2	704–48129–10	.SCREW 3 .TORNILLO 3		6				
3	EL8–48251–00	.PLATE, CAM .PLACA,LEVA		2				
4	704–48265–00	.SHAFT, FRICTION .EJE FRICCION		2				
5	701–48246–00	.SPACER .ESPACIADOR		2				
6	93430–06024	.CIRCLIP .SEGURO		8				
7	EL8–48259–00	.CIRCLIP 1 .SEGURO		2				
8	704–48262–00	.SHAFT, THROTTLE .EJE DE ACELERADOR		2				
9	704–48264–00	.THROTTLE, FRICTION .FRICCION DE ACELERADOR		2				
10	704–82540–30	.NEUTRAL SWITCH ASSY .INTERRUPTOR NEUTRAL COMPL		1				
11	704–48119–60	.COVER .CUBIERTA		1				
12	EL8–48281–00	.SCREW .TORNILLO 1		2				
13	704–48215–70	.GRAPHIC .CALCOMANIA 1		1				
14	704–48281–00	.SCREW .TORNILLO 1		2				
15	97890–05025	.SCREW, PAN HEAD .TORNILLO		4				
16	704–48261–00	.ARM, THROTTLE .BRAZO ACELERADOR		2				
17	EL8–48191–00	.WASHER 1 .ARANDELA		2				
18	704–48283–00	.SCREW .TORNILLO 3		4				
19	97380–06018	.BOLT .TORNILLO HEXAGONAL		6				
20	703–48345–01	.CABLE END, REMOTE CONTROL 2 .TERMINAL CABLE DE CONTROL REMO		4				
21	704–48287–00	.WASHER .ARANDELA		4				
22	95380–05600	.NUT .TUERCA		4				
23	704–48271–00	.ARM, SHIFT .BRAZO CAMBIADOR		2				
24	EL8–48127–00	.SCREW 1 .TORNILLO 1		18				
25	703–48358–00	.ANCHOR, CABLE .ABRAZADERA CABLE		2				
26	704–48231–00	.HOUSING, GEAR .CAJA,ENGRANAJE		2				
27	EL8–48241–00	.ARM, DRIVE .BRAZO,MANDO		2				

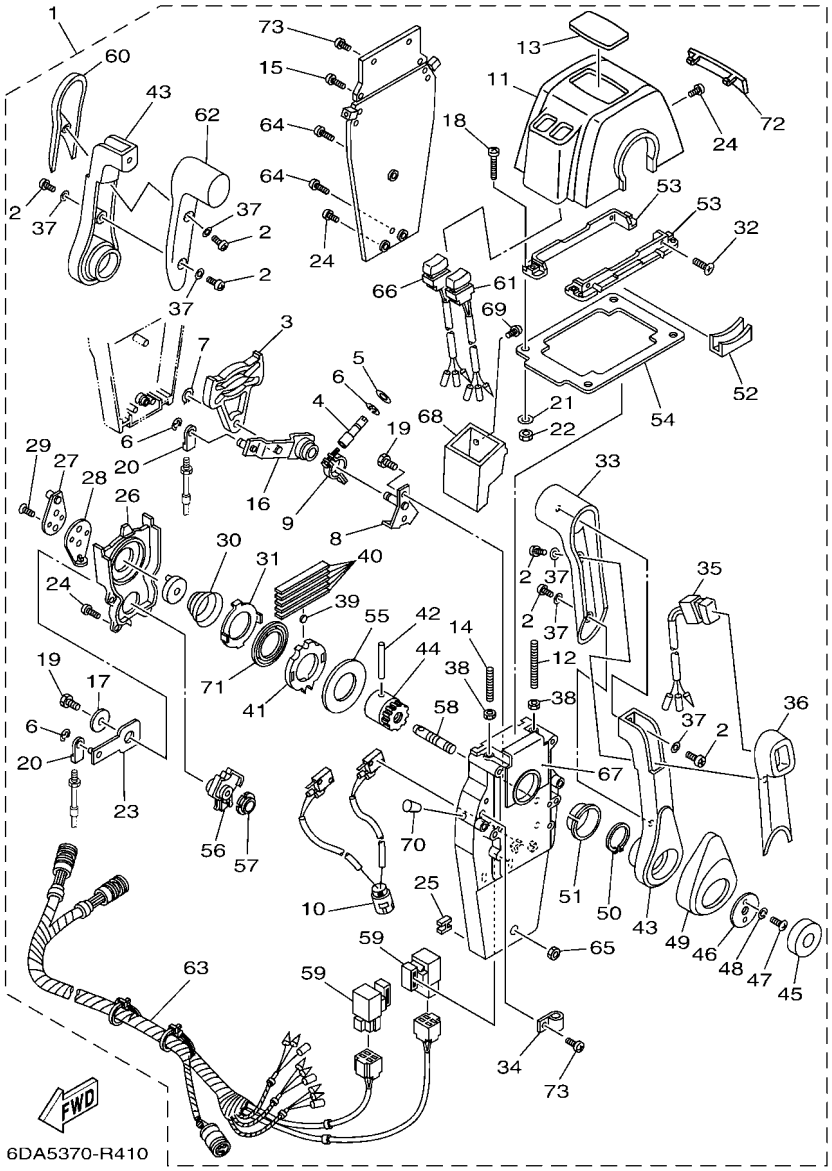

FIG. 40 REMOTE CONTROL ASSY 3 — CONTROL REMOTO COMPL 3

REF. NO.	PART NO. CODIGO Nº	DESCRIPTION DESCRIPCION	6FJ1	6FK1				REMARKS OBSERVACIONES
28	EL8–48254–00	.STOPPER, THROTTLE ADJUSTING .TAPON		2				
29	92780–06020	.SCREW, FLAT HEAD .TORNILLO CABEZA PLANA		4				
30	EL8–48244–00	.SPRING, FREE ACCEL. .RESORTE ACELERADOR LIBRE		2				
31	EL8–48245–00	.PLATE, LOCK .PLACA CERRADURA		2				
32	98780–05018	.SCREW, FLAT HEAD .TORNILLO CABEZA PLANA		4				
33	704–48222–30	.GRIP, CONTROL LEVER .MANGO DE PALANCA CONTROL		2				
34	704–82594–00	.CLAMP .GRAMPA		1				
35	704–82563–70	.TRIM & TILT SWITCH ASSY .INTERRUPTOR DE INCLINACION		1				
36	704–48229–10	.GRIP, CONTROL LEVER .MANGO DE PALANCA CONTROL 2		1				
37	92990–05300	.WASHER, INTERNAL TOOTH .ARANDELA PLANA		6				
38	95380–06600	.NUT, HEXAGON .TUERCA		4				
39	701–48248–00	.ROLLER, FREE ACCEL. .RODILLO ACELERADOR LIBRE		2				
40	704–48238–00	.SPRING, DETENT .RESORTE		10				
41	704–48232–P1	.GEAR .ENGRANAJE 1		2				
42	EL8–48164–00	.PIN 2 .PASADOR 2		2				
43	704–48221–R0	.LEVER, CONTROL .PALANCA CONTROL		2				
44	704–48242–10	.SHAFT, DRIVE .EJE, PROPULSION		2				
45	704–48225–R0	.COVER .CUBIERTA		2				
46	704–48192–00	.WASHER 2 .RONDANA 2		2				
47	97890–06018	.SCREW, PAN HEAD .TORNILLO		4				
48	92990–06300	.WASHER, INTERNAL TOOTH .ARANDELA PLANA		4				
49	704–48224–R0	.COVER, CONTROL LEVER .CUBIERTA DE PALANCA CONTROL		2				
50	EL8–48279–00	.CIRCLIP 2 .SEGURO2		2				
51	704–48234–00	.BUSHING 1 .BUJE		2				
52	704–48219–R0	.COVER, LEAD .CUBIERTA		2				
53	704–48144–20	.PLATE, STOPPER 2 .PLACA, RETEN 2		2				
54	704–48176–10	.GROMMET .TOPON		1				

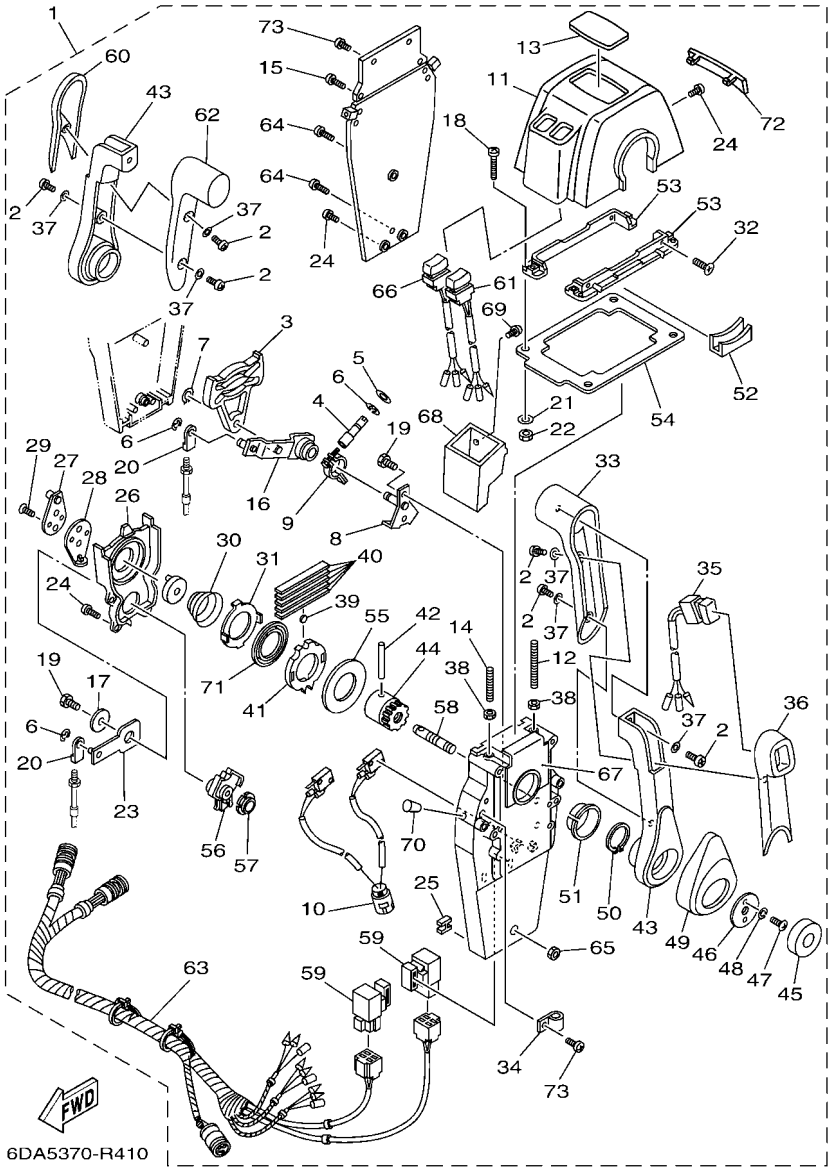

FIG. 40 REMOTE CONTROL ASSY 3 — CONTROL REMOTO COMPL 3

REF. NO.	PART NO. CODIGO Nº	DESCRIPTION DESCRIPCION	6FJ1	6FK1				REMARKS OBSERVACIONES
55	704–48192–P0	.WASHER 2 .RONDANA 2		2				
56	704–48233–00	.GEAR 2 .ENGRANAJE 2		2				
57	704–48235–00	.BUSHING .BUJE		2				
58	704–48153–00	.SHAFT, FREE ACCEL. .EJE		2				
59	704–81950–10	.RELAY ASSY .RELE COMPLETO		2				
60	704–48229–20	.GRIP, CONTROL LEVER .MANGO DE PALANCA CONTROL 2		1				
61	704–82563–80	.TRIM & TILT SWITCH ASSY .INTERRUPTOR DE INCLINACION		1				
62	704–48222–20	.GRIP, CONTROL LEVER .MANGO DE PALANCA CONTROL		1				
63	704–82590–10	.WIRE HARNESS ASSY .CONJUNTO DE CABLES		1				
64	704–48128–00	.SCREW 2 .TORNILLO 2		3				
65	704–48156–00	.NUT 1 .TUERCA 1		1				
66	704–82563–90	.TRIM & TILT SWITCH ASSY .INTERRUPTOR DE INCLINACION		1				
67	704–48284–P0	.GROMMET .TAPON		2				
68	704–48285–20	.GROMMET 2 .TAPON 2		1				
69	704–48129–60	.SCREW 3 .TORNILLO 3		2				
70	704–48166–00	.PLUG .TAPON		2				
71	704–48178–00	.PLATE, SHIFT .PLACA		2				
72	704–48167–30	.PLUG .TAPON AGUJERO		1				
73	97890–05016	.SCREW, PAN HEAD .TORNILLO		5				

FIG. 41 SWITCH & PANEL — PANEL DE INTERRUPTOR

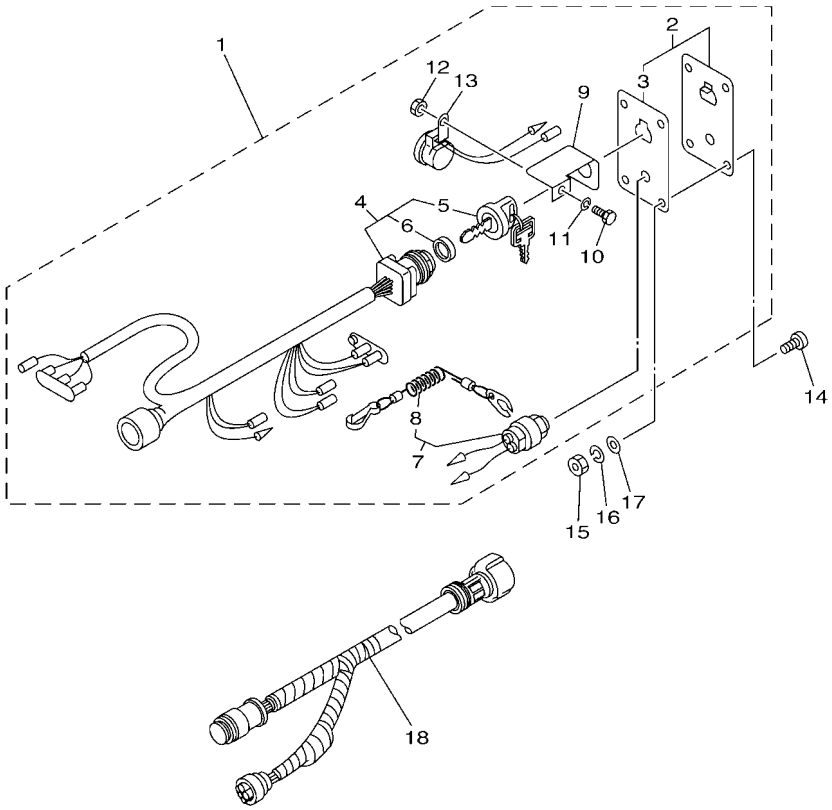

6BM4200-L370

REF. NO.	PART NO. CODIGO Nº	DESCRIPTION DESCRIPCION	6FJ1	6FK1				REMARKS OBSERVACIONES
1	6R5–82570–07	PANEL SWITCH ASSY INTERRUPTOR DE PANEL COMPL.	1					AP FOR CAR,OTH AP FOR CAR,OTH
2	704–82571–02	.PANEL, SWITCH .PANEL DE INTERRUPTOR	1					
3	6R5–82588–01	..PLATE ..PLACA	1					
4	6R5–82510–03	.MAIN SWITCH ASSY .CONJUNTO DE LLAVE IGNICION	1					
5	676–82577–01	..CAP, KEY ..TAPA	1					
6	703–82532–00	..CAP ..TAPA	1					
7	688–82575–02	.ENGINE STOP SWITCH ASSY .INTERRUPTOR DE PARADA COMPL	1					
8	682–82556–00	..LANYARD, STOP SWITCH ..CORDON DE INTERRUPTOR PARADA	1					
9	64D–82581–00	.STAY, CORD CLAMP .SOPORTE DE GRAMPA DE CABLE	1					
10	97303–05012	.BOLT .TORNILLO	1					
11	92903–05100	.WASHER, SPRING .RONDANA SENCILLA	1					
12	95303–05700	.NUT .TUERCA	1					
13	6R5–83383–00	.BUZZER .ZUMBADOR	1					
14	90149–05M05	SCREW TORNILLO DE REGLAJE	4					AP FOR CAR,OTH AP FOR CAR,OTH
15	95303–05600	NUT TUERCA	4					AP FOR CAR,OTH AP FOR CAR,OTH
16	92903–05100	WASHER, SPRING RONDANA SENCILLA	4					AP FOR CAR,OTH AP FOR CAR,OTH
17	92903–05600	WASHER, PLATE RONDANA SENCILLA	4					AP FOR CAR,OTH AP FOR CAR,OTH
18	6K1–8258A–40	EXTENSION, WIRE HARNESS (8M) EXTENSION, ARNES DE CABLES (8M	1					AP FOR CAR,OTH (10P) AP FOR CAR,OTH (10P)

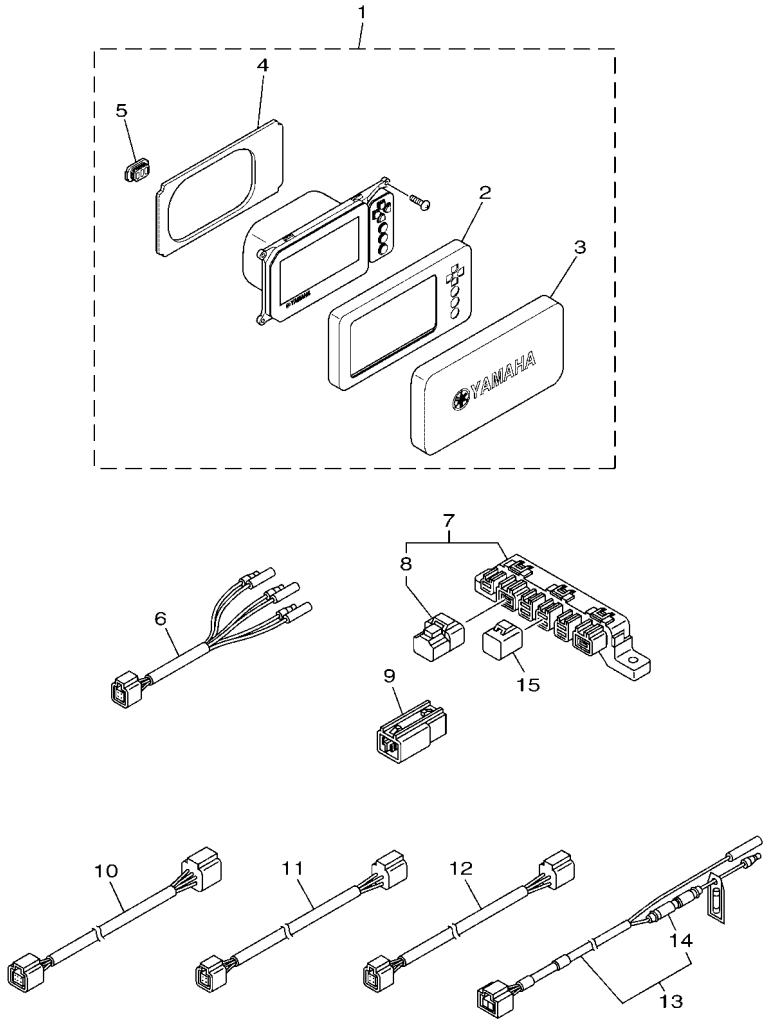

63PD370-P340

FIG. 42 OPTIONAL PARTS 1 — PARTES OPCIONALES 1

REF. NO.	PART NO. CODIGO Nº	DESCRIPTION DESCRIPCION	6FJ1	6FK1				REMARKS OBSERVACIONES
1	6YC–83710–01	MULTI DISPLAY ASSY METRO DE INDICACION PLURAL	1					EXCEPT FOR NME EXCEPT FOR NME
2	6YC–83512–00	.RING, SPEED METER .ANILLO	1					
3	6YC–87278–00	.COVER, METER .CUBIERTA DE MEDIDOR	1					
4	6YC–12223–00	.SEAL .SELLO	1					
5	6YC–82532–00	.CAP .TAPA	1					
6	6Y8–8356N–01	LEAD, FUEL TANK & GPS SENDER CABLE CONDUCTOR	1					EXCEPT FOR NME EXCEPT FOR NME
7	6Y8–81920–01	MULTI HUB ASSY TERMINAL COMPLETO	1					EXCEPT FOR NME EXCEPT FOR NME
8	6Y8–85371–01	.END OF LINE RESISTER .RESISTOR	1					
9	6Y8–81920–11	IN-LINE HUB ASSY TERMINAL COMPLETO	1					EXCEPT FOR NME EXCEPT FOR NME
10	6Y8–82553–31	25FT MAIN BUS CABLE	1					EXCEPT FOR NME EXCEPT FOR NME
11	6Y8–82521–11	2FT PIGTAIL BUS CABLE CONDUCTOR	1					EXCEPT FOR NME EXCEPT FOR NME
12	6Y8–82521–51	12FT PIGTAIL BUS CABLE CONDUCTOR	1					EXCEPT FOR NME EXCEPT FOR NME
13	6Y8–83553–01	8FT POWER WIRE CABLE CONDUCTOR	1					EXCEPT FOR NME EXCEPT FOR NME
14	6G1–82151–00	.FUSE (10A) .FUSIBLE (10A)	1					
15	6Y8–82582–11	CAP 1 (4PIN) CUBIERTA DE ARNES DE CABLE	2					EXCEPT FOR NME EXCEPT FOR NME

FIG. 43 OPTIONAL PARTS 2 — PARTES OPCIONALES 2

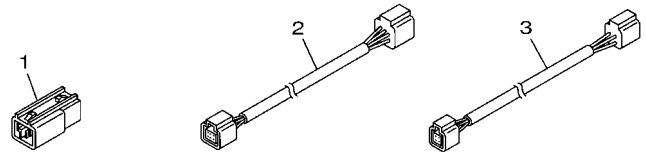

63PD200-P440

REF. NO.	PART NO. CODIGO Nº	DESCRIPTION DESCRIPCION	6FJ1	6FK1				REMARKS OBSERVACIONES
1	6Y8–81920–11	IN-LINE HUB ASSY TERMINAL COMPLETO		1				EXCEPT FOR NME EXCEPT FOR NME
2	6Y8–82553–21	20FT MAIN BUS CABLE		1				EXCEPT FOR NME EXCEPT FOR NME
3	6Y8–82521–51	12FT PIGTAIL BUS CABLE CONDUCTOR		1				EXCEPT FOR NME EXCEPT FOR NME

FIG. 44 OPTIONAL PARTS 3 — PARTES OPCIONALES 3

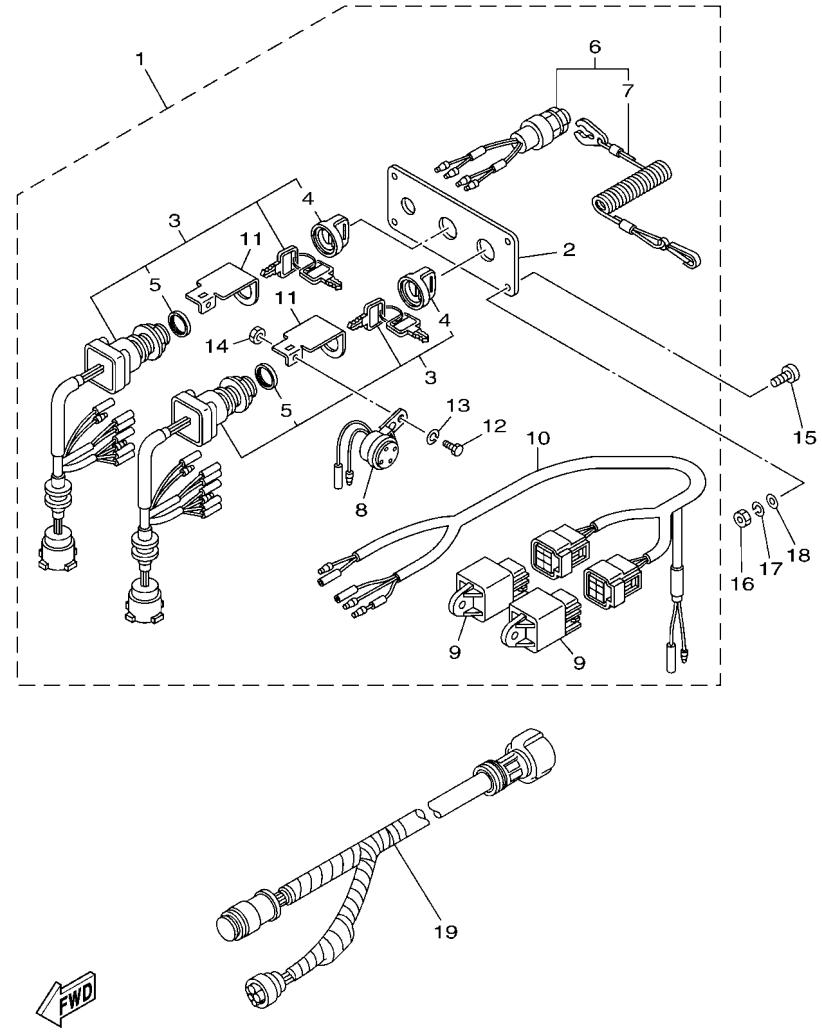

REF. NO.	PART NO. CODIGO Nº	DESCRIPTION DESCRIPCION	6FJ1	6FK1				REMARKS OBSERVACIONES
1	6Y8–82570–04	PANEL SWITCH ASSY INTERRUPTOR DE PANEL COMPL.		1				EXCEPT FOR NME EXCEPT FOR NME
2	6Y8–82571–01	.PLATE, PANEL SWITCH .PANEL DE INTERRUPTOR		1				
3	6Y8–82510–03	.MAIN SWITCH ASSY .CONJUNTO DE LLAVE IGNICION		2				
4	676–82577–01	..CAP, KEY ..TAPA		1				
5	703–82532–00	..CAP ..TAPA		1				
6	6K1–82575–01	.ENGINE STOP SWITCH ASSY .INTERRUPTOR DE PARADA COMPL		1				
7	682–82556–00	..LANYARD, STOP SWITCH ..CORDON DE INTERRUPTOR PARADA		1				
8	6R5–83383–00	.BUZZER .ZUMBADOR		2				
9	68V–81950–00	.RELAY ASSY .RELE COMPLETO		2				
10	6Y8–82507–00	.LEAD, IGNITION SWITCH RELAY .CABLE CONDUCTOR		1				
11	64D–82581–00	.STAY, CORD CLAMP .SOPORTE DE GRAMPA DE CABLE		2				
12	97003–05012	.BOLT .PERNO		2				
13	92903–05100	.WASHER, SPRING .RONDANA SENCILLA		2				
14	95303–05700	.NUT .TUERCA		2				
15	90149–05M05	SCREW TORNILLO DE REGLAJE		4				EXCEPT FOR NME EXCEPT FOR NME
16	95380–05600	NUT TUERCA		4				EXCEPT FOR NME EXCEPT FOR NME
17	92990–05100	WASHER, SPRING ARANDELA PLANA		4				EXCEPT FOR NME EXCEPT FOR NME
18	92990–05600	WASHER, PLATE ARANDELA PLANA		4				EXCEPT FOR NME EXCEPT FOR NME
19	61B–8258A–01	EXTENSION, WIRE HARNESS (9.5M) EXTENSION, ARNES DE CABLES(9.5		1				EXCEPT FOR NME (10P) EXCEPT FOR NME (10P)

FIG. 45 OPTIONAL PARTS 4 — PARTES OPCIONALES 4

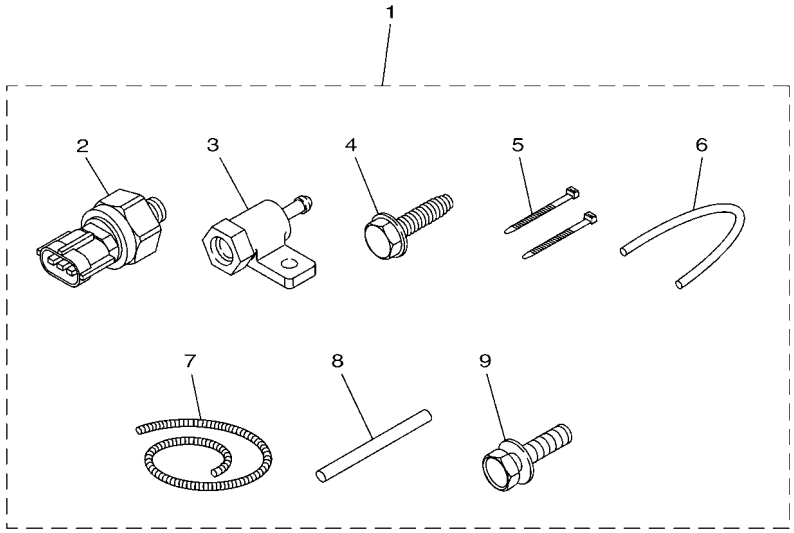

6CE6300-P430

REF. NO.	PART NO. CODIGO Nº	DESCRIPTION DESCRIPCION	6FJ1	6FK1				REMARKS OBSERVACIONES
1	60V–8A4L1–16	SENSOR, MODULE 1 SENSOR COMP. 1	1					FOR MDV FOR MDV
2	6AW–8366B–01	.SENSOR, WATER PRESSURE .SENSOR DE PRESION AGUA	1					
3	60V–8366D–00	.ADAPTOR, INPUT .CONECTOR BANJO 3	1					
4	90109–06M81	.BOLT .PERNO	1					
5	90465–11M10	.CLAMP .BRIDA	2					
6	90445–07017	.HOSE (L: 550MM) .TUBO (L: 550MM)	1					
7	90447–07013	.HOSE, COVER (L: 700MM) .MANGUERA DE CUBIERTA (L:700MM)	1					
8	60V–42629–00	.SEAL .SELLO 2	1					
9	97595–06516	.BOLT, WITH WASHER .PERNO CON ARANDELA	1					

FIG. 46 OPTIONAL PARTS 5 — PARTES OPCIONLES 5

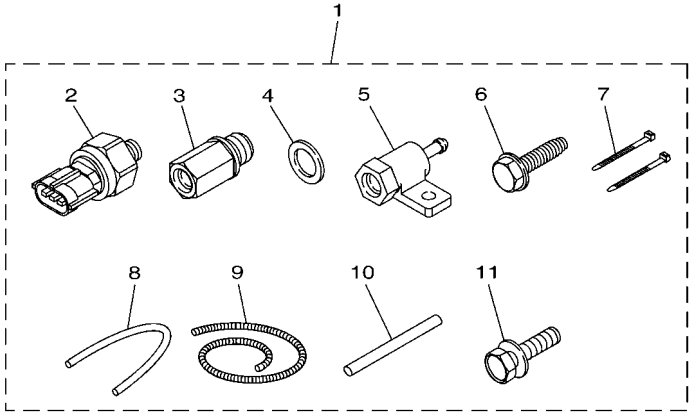

6CL6370-P440

REF. NO.	PART NO. CODIGO Nº	DESCRIPTION DESCRIPCION	6FJ1	6FK1				REMARKS OBSERVACIONES
1	63P–8A4L2–04	SENSOR, MODULE 2 SENSOR COMP. 2	1					FOR CAR,OTH FOR CAR,OTH
2	6AW–8366B–01	.SENSOR, WATER PRESSURE .SENSOR DE PRESION AGUA	2					
3	63P–8366C–00	.ADAPTOR, INPUT .CONECTOR BANJO 2	1					
4	90430–14115	.GASKET .JUNTA	1					
5	60V–8366D–00	.ADAPTOR, INPUT .CONECTOR BANJO 3	1					
6	90109–06M81	.BOLT .PERNO	1					
7	90465–11M10	.CLAMP .BRIDA	2					
8	90445–07017	.HOSE (L: 550MM) .TUBO (L: 550MM)	1					
9	90447–07013	.HOSE, COVER (L: 700MM) .MANGUERA DE CUBIERTA (L:700MM)	1					
10	60V–42629–00	.SEAL .SELLO 2	1					
11	97595–06516	.BOLT, WITH WASHER .PERNO CON ARANDELA	1					

FIG. 47 OPTIONAL PARTS 6 — PARTES OPCIONALES 6

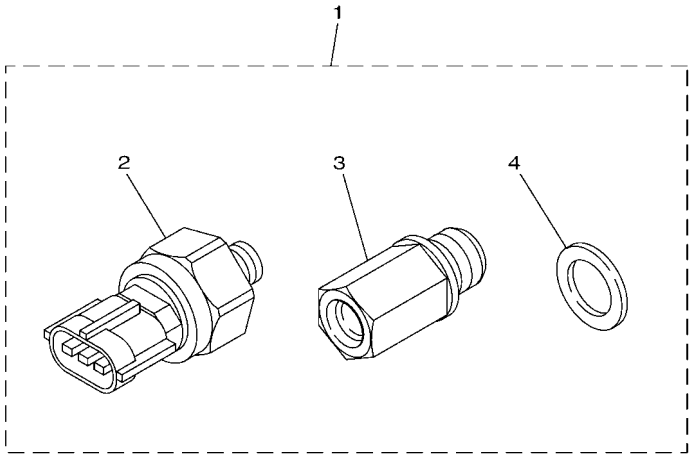

6P2B300-N410

REF. NO.	PART NO. CODIGO Nº	DESCRIPTION DESCRIPCION	6FJ1	6FK1				REMARKS OBSERVACIONES
1	63P–8A4L0–11	SENSOR, MODULE SENSOR COMP.		1				EXCEPT FOR NME EXCEPT FOR NME
2	6AW–8366B–01	.SENSOR, WATER PRESSURE .SENSOR DE PRESION AGUA		1				
3	63P–8366C–00	.ADAPTOR, INPUT .CONECTOR BANJO 2		1				
4	90430–14115	.GASKET .JUNTA		1				

FIG. 48 OPTIONAL PARTS 7 — PARTES OPCIONALES 7

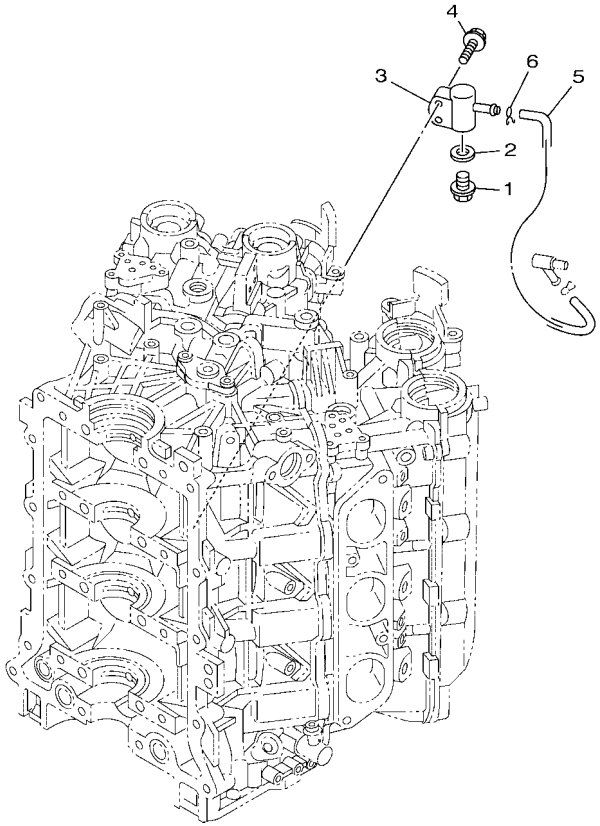

6ALB100-P340

REF. NO.	PART NO. CODIGO Nº	DESCRIPTION DESCRIPCION	6FJ1	6FK1				REMARKS OBSERVACIONES
1	90340–14M06	PLUG, STRAIGHT SCREW TORNILLO, DE DRENAJE	1	1				
2	90430–14115	GASKET JUNTA	1	1				
3	6P2–83652–00	CONNECTOR CONECTOR	1	1				
4	97595–06530	BOLT, WITH WASHER PERNO CON ARANDELA	2	2				
5	6H4–24311–00	PIPE, FUEL 1 TUBO DE COMBUSTIBLE 1	1	1				
6	90467–08M18	CLIP PRESILLA	1	1				

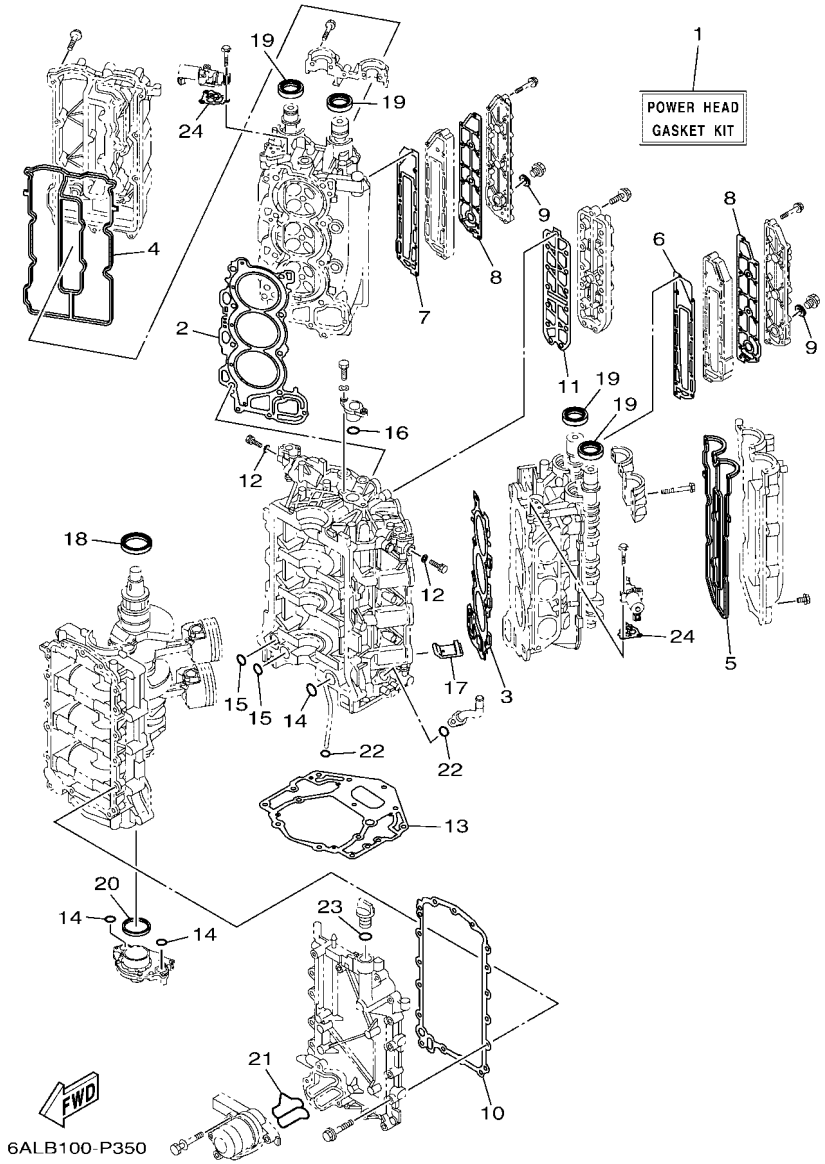

FIG. 49 REPAIR KIT 1 — ESTUCHE REPARATION 1

REF. NO.	PART NO. CODIGO Nº	DESCRIPTION DESCRIPCION	6FJ1	6FK1				REMARKS OBSERVACIONES
1	6P2–W0001–03	POWER HEAD GASKET KIT JUEGO DE EMPAQUE DE MOTOR	1	1				
2	6P2–11181–00	.GASKET, CYLINDER HEAD 1 .JUNTA, DE CULATA 1	1	1				
3	6P2–11182–00	.GASKET, CYLINDER HEAD 2 .EMPAQUE CULATA DE CILINDRO 2	1	1				
4	6P2–11193–00	.GASKET, HEAD COVER 1 .EMPAQUE	1	1				
5	6P2–11194–00	.GASKET, HEAD COVER 2 .EMPAQUE DE TAPA DE CULATA 2	1	1				
6	6P2–41112–00	.GASKET, EXHAUST INNER COVER .EMPAQUE	1	1				
7	6P2–41122–00	.GASKET, EXHAUST INNER COVER .EMPAQUE	1	1				
8	6P2–41114–00	.GASKET, EXHAUST OUTER COVER .EMPAQUE	2	2				
9	90201–186F1	.WASHER, PLATE .ARANDELA PLANA	2	2				
10	69J–15451–00	.GASKET, CRANKCASE COVER 1 .EMPAQ DE CUBIERTA DE CARTER	1	1				
11	6P2–1131B–00	.GASKET, COVER .EMPAQUE DE CUBIERTA	1	1				
12	90430–05002	.GASKET .JUNTA	2	2				
13	69J–11351–11	.GASKET, CYLINDER .JUNTA, DE CILINDRO	1	1				
14	93210–25552	.O-RING .ANILLO O	3	3				
15	93210–19MJ1	.O-RING .ANILLO O	2	2				
16	93210–25647	.O-RING .ANILLO O	1	1				
17	69J–14664–00	.GROMMET, WATER SHUT .TAPON	2	2				
18	93102–63004	.OIL SEAL .SELLO ACEITE	1	1				
19	93102–38008	.OIL SEAL .SELLO ACEITE	4	4				
20	69J–11355–00	.SEAL, CYLINDER 1 .RETEN ACEITE CILINDRO 1	1	1				
21	6P2–13477–00	.GASKET .EMPAQUE	1	1				
22	93210–19MJ3	.O-RING .ANILLO O	2	2				
23	93210–24M79	.O-RING .ANILLO O	1	1				
24	6CB–1242F–00	.GASKET, FILTER .EMPAQUE DE FILTRO	2	2				

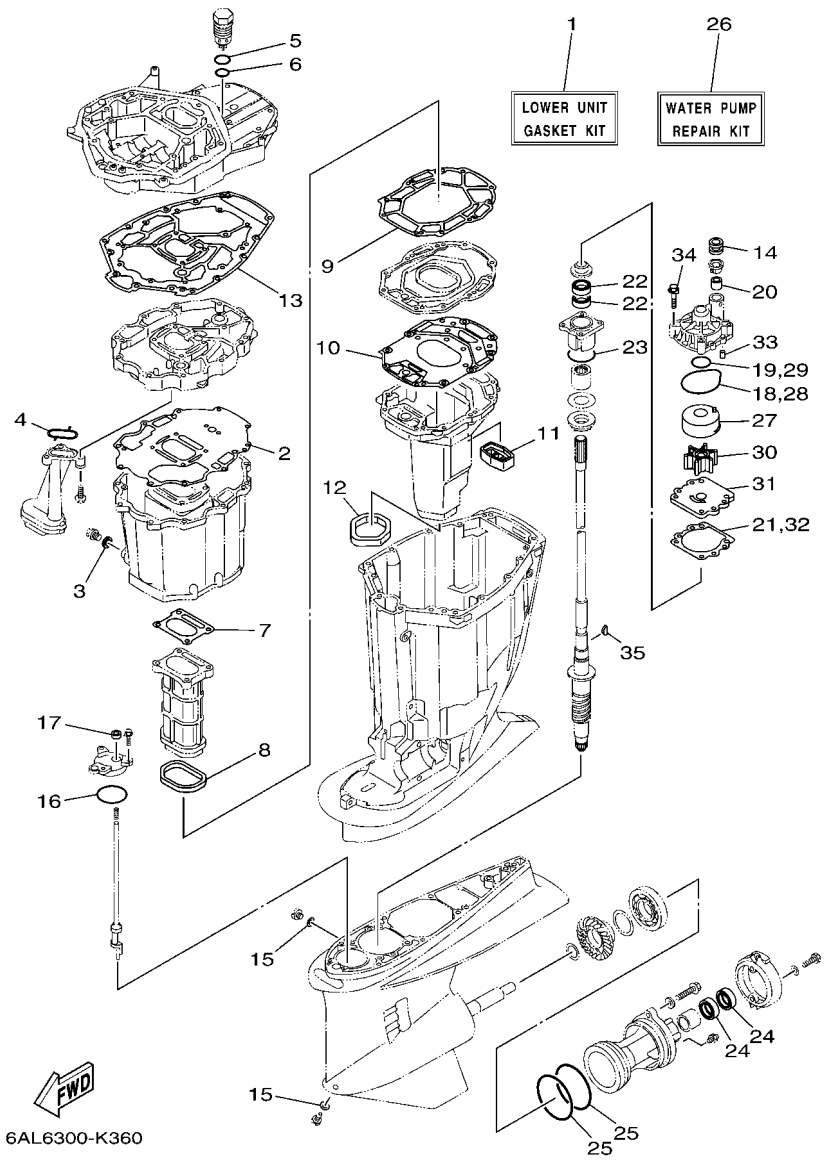

FIG. 50 REPAIR KIT 2 — ESTUCHE REPARATION 2

REF. NO.	PART NO. CODIGO Nº	DESCRIPTION DESCRIPCION	6FJ1	6FK1				REMARKS OBSERVACIONES
1	6P2–W0001–21	LOWER UNIT GASKET KIT JUEGO DE EMPAQUE UNIDAD INFER.	1	1				
2	69J–15312–01	.GASKET, OIL PAN .EMPAQ BANDEJA DE ACEITE	1	1				
3	90430–14M09	.GASKET .JUNTA	1	1				
4	69J–13415–00	.SEAL, OIL STRAINER .SELLO COLADOR ACEITE	1	1				
5	93210–347A1	.O-RING .ANILLO O	1	1				
6	93210–28543	.O-RING .ANILLO O	1	1				
7	6P2–41134–00	.GASKET, EXHAUST MANIFOLD .EMPAQUE	1	1				
8	69J–41138–00	.SEAL, EXT. 1 .SELLO, ESCAPE 1	1	1				
9	69J–41135–A0	.GASKET, EXHAUST MANIFOLD .EMPAQUE	1	1				
10	6S1–41136–00	.GASKET, EXHAUST MANIFOLD 4 .EMPAQUE	1	1				
11	69J–45127–00	.SEAL .SELLO DE GOMA	1	1				
12	69J–45123–00	.GASKET, MUFFLER .EMPAQUE SILENCIADOR	1	1				
13	69J–45113–20	.GASKET, UPPER CASING .EMPAQUE	1	1				
14	6E5–44366–00	.DAMPER, WATER SEAL 2 .GOMA DEL SELLO DE AGUA 2	1	1				
15	90430–08003	.GASKET .JUNTA	2	2				
16	93210–64488	.O-RING .ANILLO O	1	1				
17	93106–09014	.OIL SEAL .SELLO ACEITE	1	1				
18	93210–86M38	.O-RING .ANILLO O	1	1				
19	93210–37160	.O-RING .ANILLO O	1	1				
20	6E5–44365–00	.DAMPER, WATER SEAL 1 .HULE DE SELLO DE AGUA 1	1	1				
21	6E5–44315–A0	.GASKET, WATER PUMP .EMPAQUE	1	1				
22	93101–28M16	.OIL SEAL .SELLO ACEITE	2	2				
23	93210–55M14	.O-RING .ANILLO O	1	1				
24	93101–30002	.OIL SEAL .SELLO ACEITE	2	2				
25	93211–04384	.O-RING .ANILLO O	2	2				
26	6S1–W0078–00	WATER PUMP REPAIR KIT ESTUCHE REPARACION BOMBA AGUA	1	1				
27	6R3–44322–42	.INSERT, CARTRIDGE .CARTUCHO	1	1				

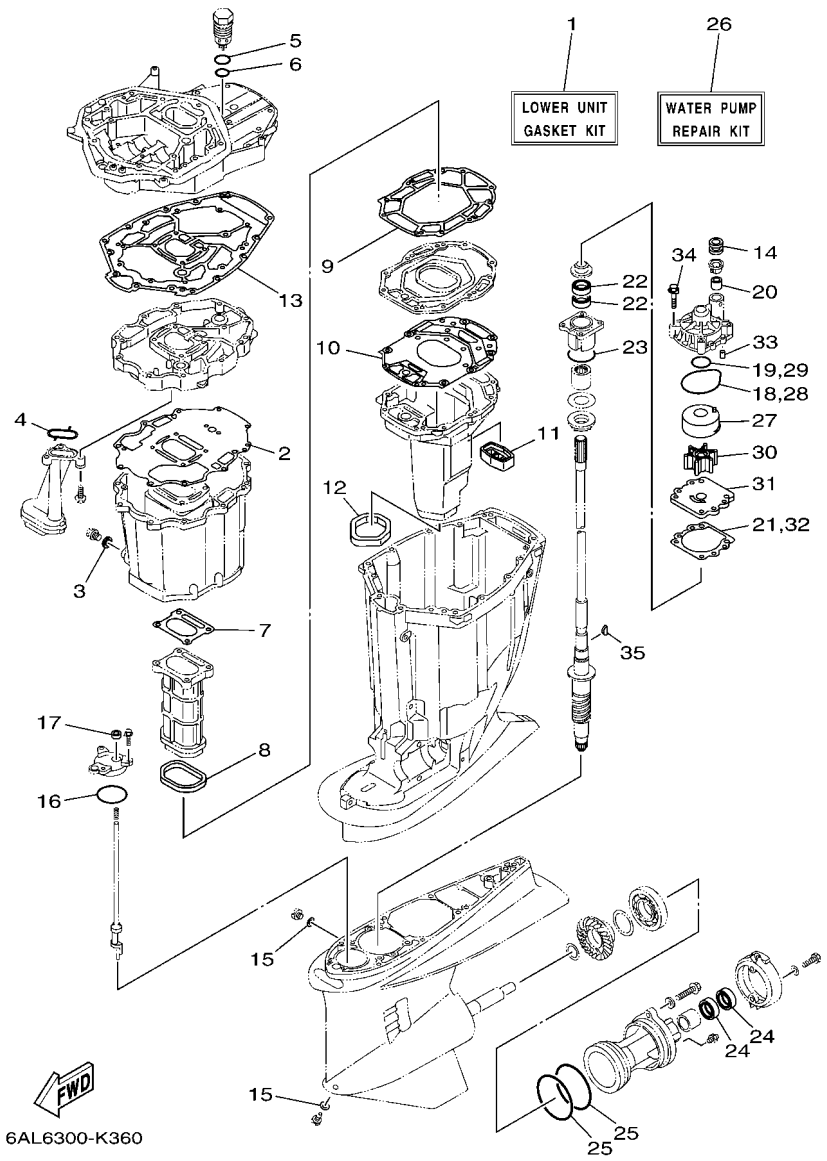

FIG. 50 REPAIR KIT 2 — ESTUCHE REPARATION 2

REF. NO.	PART NO. CODIGO Nº	DESCRIPTION DESCRIPCION	6FJ1	6FK1				REMARKS OBSERVACIONES
28	93210–86M38	.O-RING .ANILLO O	1	1				
29	93210–37160	.O-RING .ANILLO O	1	1				
30	6E5–44352–01	.IMPELLER .IMPULSOR	1	1				
31	6G5–44323–41	.OUTER PLATE, CARTRIDGE .PLACA EXTERIOR DEL CARTUCHO	1	1				
32	6E5–44315–A0	.GASKET, WATER PUMP .EMPAQUE	1	1				
33	93606–12019	.PIN, DOWEL .PASADOR DE CLAVIJA	2	2				
34	90119–08M14	.BOLT, WITH WASHER .TORNILLO CON ARANDELA	4	4				
35	90280–04M05	.KEY, WOODRUFF .CUNA WOODRUFF	1	1				

NUMERICAL INDEX
INDICE NUMERICO

PART NO. CODIGO Nº	REF. NO.
6DX–11000–01	3 – 1
6P2–11110–11–9S	5 – 2
69J–11119–00	3 – 13
6P2–11119–00	6 – 16
6P2–1111E–00	6 – 17
6P2–11120–11–9S	5 – 10
6S5–11133–10	5 – 3
	5 – 11
6P2–11135–00	5 – 34
6P2–11181–00	5 – 22
	49 – 2
6P2–11182–00	5 – 27
	49 – 3
6P2–11191–00–9S	5 – 33
6P2–11192–00–9S	5 – 41
6P2–11193–00	5 – 37
	49 – 4
6P2–11194–00	5 – 42
	49 – 5
69J–11301–00	5 – 16
69J–11313–00	3 – 40
6P2–1131B–00	3 – 18
	49 – 11
6P2–1131C–00–9S	3 – 15
6E5–11325–00	1 – 1
	1 – 8
	1 – 15
	3 – 16
	6 – 9
	19 – 10
6P2–11325–00	1 – 7
	6 – 8
6P3–11325–00	1 – 3
	3 – 24
	3 – 60
67F–11325–01	1 – 5
	5 – 17
67F–11328–00	5 – 18
69J–11351–11	3 – 37
	49 – 13
69J–11355–00	30 – 16
	49 – 20
6AW–11371–10	29 – 7
676–11372–00	5 – 5
6P2–11372–00	8 – 25
6P2–11377–00	8 – 28
6P2–11410–10	4 – 1
6P2–11416–00	4 – 4

PART NO. CODIGO Nº	REF. NO.
6P2–11416–10	4 – 4
6P2–11416–20	4 – 4
6P2–11417–00	4 – 5
6P2–11417–10	4 – 5
6P2–11417–20	4 – 5
6AW–11426–01	4 – 6
6AW–11427–01	4 – 7
6CB–11478–00	4 – 2
6FA–11567–00	7 – 17
6P2–11590–01	7 – 25
6S1–11603–00	4 – 12
	4 – 14
6S1–11604–00	4 – 12
	4 – 14
6DX–11631–00–93	4 – 11
63P–11633–10	4 – 15
63P–11634–00	4 – 16
6DX–11635–00	4 – 11
6DX–11642–00–93	4 – 13
6DX–11645–00	4 – 13
6P2–11650–00	4 – 8
63P–11654–10	4 – 9
6P2–11656–00	4 – 10
6P2–11656–10	4 – 10
6P2–11656–20	4 – 10
6P2–12111–10	7 – 1
6CB–12113–00	7 – 4
51Y–12119–00	7 – 7
6DX–12121–00	7 – 2
6P2–12171–11	7 – 9
6P2–12172–11	7 – 13
6P2–12181–11	7 – 11
6P2–12182–11	7 – 15
6YC–12223–00	42 – 4
69J–12233–00	29 – 10
6P2–1240H–00–9S	3 – 22
6P3–1240H–00–9S	3 – 58
67F–12411–01	1 – 2
	3 – 20
67F–12412–00	3 – 21
6CB–1242F–00	6 – 20
	49 – 24
6P2–1243A–00	3 – 28
6P2–1243E–00	3 – 29
6P2–1243F–00	3 – 30
6P2–12481–12	9 – 34
6P2–12482–00	9 – 6
6P2–12483–00	9 – 8

PART NO. CODIGO Nº	REF. NO.
6P2–12484–01	9 – 2
6P2–12485–00	9 – 16
6P2–12485–00	9 – 17
6P2–1248E–00	9 – 18
6P2–12491–00	19 – 8
6DR–12572–00	23 – 13
6R3–12581–00	23 – 14
6R3–12582–00	23 – 15
6R3–12583–00	23 – 16
6P2–12615–00	7 – 22
6P2–12623–00	7 – 19
6P2–12645–20	7 – 18
6P2–12663–00	7 – 20
6S5–12858–00	3 – 45
6CB–13016–00	1 – 10
	13 – 5
6AW–13119–00	30 – 14
6AW–13132–00	13 – 26
6P2–13160–11	12 – 1
6P2–13161–00	12 – 2
6P2–13170–11	12 – 6
6P2–13171–00	12 – 7
6P2–13300–00	30 – 12
69J–13329–01	30 – 13
69J–13411–00	30 – 8
69J–13415–00	30 – 10
	50 – 4
60L–13437–42	17 – 24
60L–13437–63	17 – 24
69J–13440–03	1 – 4
	3 – 44
6P2–13446–00–9S	3 – 46
67F–13448–00	2 – 14
6P2–13448–00	5 – 46
6P2–13477–00	3 – 47
	49 – 21
6P2–13532–10	11 – 3
6P2–13533–00	11 – 2
6P2–13545–00	11 – 7
6P2–13546–00	11 – 10
6P2–13547–00	11 – 18
6P2–13548–10	11 – 19
6P2–13556–00	10 – 4
6P2–13557–00	10 – 5
6P2–13564–00	8 – 3
6P2–13573–00	10 – 11
6P2–13574–00	10 – 21
68V–13577–00	14 – 7

PART NO. CODIGO Nº	REF. NO.
68V–13577–00	14 – 13
6P2–13577–00	12 – 5
	12 – 10
6P2–13578–00	10 – 8
6P2–13588–00	10 – 7
6CB–13593–00	13 – 23
6P2–13594–00	8 – 4
6P2–13595–00	11 – 4
69J–13631–00	30 – 15
6P2–13641–00	8 – 13
6P2–13642–00	8 – 16
6P2–13645–00	8 – 14
	8 – 17
6P2–13646–00	8 – 15
6P2–13647–00	8 – 18
6P2–13711–00	10 – 3
63P–13716–00	13 – 22
6P2–13750–10	10 – 1
6P2–13751–01	10 – 2
6P2–13758–00	11 – 14
6P2–13761–11	12 – 3
	12 – 8
6AW–13781–00	13 – 30
6AW–13784–00	13 – 33
6CB–13906–01	13 – 8
6P2–13907–20	13 – 24
63P–13915–00	1 – 11
	13 – 25
6P2–13973–30	14 – 9
6P2–13974–30	14 – 10
6C5–1410B–00	12 – 4
	12 – 9
69J–14137–00	14 – 6
6CB–14146–00	13 – 10
6P2–14149–00	14 – 2
6P2–14159–00	10 – 13
69J–14164–00	10 – 22
6P2–14180–51	13 – 1
6AW–14181–11	13 – 15
6AW–14182–11	13 – 2
6P2–14191–00	13 – 16
68V–14216–00	13 – 12
6CB–14216–00	13 – 6
6CB–14239–00	13 – 17
6P2–14255–00	10 – 12
6P2–14349–00	11 – 1
68V–14356–00	10 – 24
6P2–14360–00	10 – 6

PART NO. CODIGO Nº	REF. NO.
6P2–14386–00	13 – 37
6P2–1441J–00	8 – 22
6CB–14429–01	13 – 19
63P–14435–00	8 – 32
6P2–14440–00	8 – 21
6CB–1447B–00	13 – 29
6P2–14496–00	10 – 9
6CB–14546–00	13 – 28
6CB–14564–00	13 – 9
63P–14567–00	13 – 21
69J–14624–01	29 – 45
69J–14664–00	3 – 43
	49 – 17
69J–14711–21–9S	29 – 22
2D1–14737–00	19 – 3
6P2–14752–00	9 – 19
6P2–1475A–10	11 – 5
6P2–1475E–00	11 – 6
6P2–1475F–00	11 – 8
6P2–1475G–00	11 – 9
68V–1475H–00	13 – 13
68V–1475J–00	13 – 14
6CB–14984–00	1 – 12
	13 – 39
6CB–14985–00	13 – 27
6P2–15100–10	3 – 2
6P2–15142–00	5 – 39
6P2–15143–00	5 – 44
6P2–15187–00	3 – 5
69J–15311–10–CA	30 – 1
69J–15312–01	29 – 47
	50 – 2
69J–15316–00	29 – 32
6P2–15362–10	30 – 19
6G8–15363–00	3 – 49
6P2–15373–02	8 – 19
6P2–15377–10	30 – 20
6P2–15411–01–9S	3 – 8
69J–15451–00	3 – 9
	49 – 10
6P2–15481–00	3 – 6
6P2–15512–00	7 – 26
69J–15761–00	30 – 2
6P2–2134X–00	10 – 14
6E5–21744–00	9 – 7
	11 – 16
6P2–24135–00	11 – 12
6P2–24136–00	11 – 13

PART NO. CODIGO Nº	REF. NO.
6P2–24137–00	11 – 15
6P2–2416A–00	11 – 11
6P2–24170–00	10 – 19
6P2–2419A–00	10 – 15
6CB–24217–00	13 – 7
6P2–24300–00	14 – 12
6AW–24300–10	14 – 11
6Y2–24307–50	16 – 1
6H4–24311–00	48 – 5
6P2–24313–50	15 – 18
6P2–24314–00	15 – 2
61A–24316–00	9 – 20
6AW–24317–20	14 – 5
6AW–24323–20	14 – 3
6AW–24324–30	14 – 4
6E5–24351–51	16 – 3
6Y2–24360–60	16 – 5
6P2–24376–00	11 – 20
6CE–24376–01	9 – 3
6R3–24377–00	15 – 25
6R3–24377–10	15 – 4
688–24378–00	9 – 21
	9 – 22
	9 – 23
	9 – 24
	9 – 25
	11 – 17
69J–24378–00	2 – 15
6CE–24378–00	3 – 31
6E5–24378–00	14 – 8
6E5–24379–00	23 – 10
68V–24379–10	13 – 11
6CB–24410–00	13 – 31
6P2–24419–00	8 – 8
6P2–24422–10	8 – 6
6CB–24452–10	13 – 18
4SV–24453–00	13 – 34
6CB–24460–00	13 – 4
6P3–24469–00	15 – 9
6CB–24482–00	13 – 20
6AW–24491–10	13 – 32
6CB–24492–00	13 – 36
6CB–24501–01	1 – 9
	13 – 3
6P3–24519–00	15 – 10
6P3–24560–03	15 – 6
6P3–24562–03	15 – 8
6P3–24563–01	1 – 13

NUMERICAL INDEX
INDICE NUMERICO

PART NO. CODIGO Nº	REF. NO.
6P3–24563–01	15 – 7
6P3–24564–00	1 – 14
	15 – 11
6P2–24566–11	15 – 12
6CB–24592–00	13 – 38
68V–2481H–00	10 – 25
69J–28100–01	15 – 26
67F–28100–10	15 – 26
6CB–2812A–00	19 – 38
69J–41111–01–9S	6 – 1
6P2–41112–00	6 – 5
	49 – 6
69J–41113–02–9S	6 – 3
6P2–41114–00	6 – 7
	49 – 8
69J–41121–01–9S	6 – 2
6P2–41122–00	6 – 6
	49 – 7
69J–41123–02–9S	6 – 4
69J–41131–11–CA	29 – 13
69J–41132–20–9S	29 – 15
6P2–41134–00	29 – 16
	50 – 7
69J–41135–A0	29 – 19
	50 – 9
6S1–41136–00	29 – 21
	50 – 10
69J–41137–10–CA	29 – 1
69J–41138–00	29 – 18
	50 – 8
6CB–41273–00	24 – 39
69J–42510–00–8D	26 – 5
6FJ–42610–00	2 – 1
6P2–42615–00	22 – 8
6P2–4261A–00	2 – 2
60V–42629–00	45 – 8
	46 – 10
68F–42647–01	2 – 3
69J–42647–01	2 – 4
68F–42648–01	2 – 12
60V–42651–01	2 – 8
60V–42652–00	2 – 13
68F–42663–00	2 – 11
69J–42663–00	2 – 5
6S1–42675–00	2 – 20
6S1–42676–00	2 – 21
6FJ–42677–00	2 – 22
6FJ–42678–00	2 – 19

PART NO. CODIGO Nº	REF. NO.
6S1–4267A–00	2 – 24
6S1–42681–00	2 – 23
6P2–42710–00–8D	22 – 1
648–42715–00	24 – 27
69J–42716–00	22 – 9
61A–42717–00	22 – 18
69J–42717–00	22 – 17
6P2–42717–00	22 – 3
6P2–42718–00	22 – 4
6P2–42722–00	22 – 28
69J–42723–01	20 – 17
6E5–42724–00	29 – 6
6P2–42725–00	22 – 7
6H1–42726–21	22 – 13
61A–42727–00	22 – 15
6P2–42735–00	18 – 16
6P2–42738–00–8D	22 – 2
69J–42741–00–8D	23 – 1
6P2–42743–00	22 – 48
6H4–42748–00	22 – 6
68F–42753–00	22 – 55
6P2–42761–00	3 – 34
67F–42761–01	3 – 33
6P2–42766–20	22 – 50
69J–42769–00	29 – 28
69J–42771–00–8D	23 – 3
69J–42774–10	23 – 7
6EE–42794–40	22 – 59
6EE–42794–50	22 – 60
69J–42815–00–8D	22 – 30
69J–42816–00–8D	22 – 39
69J–42817–00–8D	22 – 31
63P–42818–01	22 – 34
68V–42818–01	22 – 42
6P2–42828–00–9S	22 – 27
69J–42828–02–9S	22 – 26
68F–42828–11–9S	22 – 37
69J–43111–02–8D	25 – 1
69J–43112–01–8D	25 – 12
6E5–43126–10	25 – 41
6R3–43131–00	25 – 19
61A–43132–00	25 – 10
61A–43133–00	25 – 13
64D–43144–00	22 – 45
6G5–43144–00	25 – 31
6E5–43145–01	35 – 8
6G5–43148–00	25 – 36
61A–43181–01	25 – 33

PART NO. CODIGO Nº	REF. NO.
6G5–43185–02	25 – 34
61A–43311–22–8D	25 – 28
61A–43311–22–8D	26 – 3
69J–43800–07–8D	27 – 1
69J–43801–01	27 – 4
69J–43804–00	28 – 5
69J–43805–00	28 – 4
6CE–4380P–00	27 – 12
6CE–43810–00	27 – 3
61A–43811–00	27 – 9
61A–43813–02	27 – 18
6H1–43814–00	27 – 17
69J–43816–00	27 – 62
69J–43817–00	28 – 13
61A–43818–00	27 – 25
69J–4381C–00	27 – 30
	27 – 35
69J–4381J–00	27 – 63
69J–43820–01	27 – 70
61A–43821–01	27 – 69
61A–43822–00	27 – 68
69J–43828–00	28 – 16
6H1–43829–00	28 – 19
69J–4382E–00	27 – 11
69J–43830–01	27 – 33
69J–43831–00	27 – 65
69J–43833–02	27 – 21
61A–43835–01	27 – 19
6CE–43840–00	27 – 2
6CJ–43841–00	27 – 42
6CJ–43843–00	27 – 53
6CJ–43844–00	27 – 50
6H1–43844–10	27 – 55
69J–43845–00	27 – 28
69A–4384F–00	27 – 39
69J–4384G–00	27 – 58
6H1–4384G–11	27 – 54
69J–4384H–00	27 – 10
61A–4384H–10	27 – 73
6CJ–4384M–00	27 – 38
69J–43851–00	27 – 49
69J–43853–00	27 – 45
69J–43854–00	27 – 57
69J–43855–00	27 – 52
6H1–43856–10	27 – 56
61A–43861–00	27 – 14
	27 – 16
	27 – 66

PART NO. CODIGO Nº	REF. NO.
69J–43861–00	28 – 6
6H1–43861–00	27 – 6
6D8–43863–00	27 – 27
61A–43864–00	27 – 72
60V–4386A–00	27 – 44
69J–4386K–00	28 – 10
61A–43871–00	27 – 15
69J–43871–00	27 – 61
6H1–43872–00	27 – 7
61A–43874–00	27 – 71
6H1–43875–00	27 – 29
6T4–43875–01	27 – 67
61A–43875–10	27 – 74
61A–43876–00	27 – 26
69J–43880–01	28 – 1
69J–43881–01	28 – 11
69J–43882–00	28 – 8
6H1–43883–00	27 – 43
69J–43886–00	28 – 7
69J–43888–00	28 – 17
69J–4388E–01	27 – 23
69J–4388F–00	28 – 14
69J–4388H–00	28 – 12
69J–4388J–00	27 – 20
69J–43891–00	28 – 9
6CJ–43893–00	27 – 46
69J–43894–00	27 – 41
69J–43899–01	27 – 31
61A–4389H–01	27 – 8
69J–4389J–00	27 – 32
	27 – 36
69J–44117–00	24 – 7
69J–44118–00	24 – 26
69J–44120–01	24 – 32
69J–44120–11	24 – 32
6P2–44121–00	24 – 21
69J–44122–00	24 – 22
6P2–44139–00	24 – 38
69J–44150–00	31 – 15
69K–44150–00	33 – 17
69J–44176–01	24 – 9
703–44189–20	38 – 36
703–44189–30	38 – 42
6X3–44191–00	38 – 47
61A–44311–01	31 – 18
	33 – 20
6E5–44312–00	31 – 23
	33 – 25

PART NO. CODIGO Nº	REF. NO.
6E5–44315–A0	31 – 27
	33 – 29
	50 – 21
	50 – 32
6R3–44322–42	31 – 19
	33 – 21
	50 – 27
6G5–44323–41	31 – 26
	33 – 28
	50 – 31
6E5–44352–01	31 – 24
	33 – 26
	50 – 30
6S1–44361–02	32 – 3
	34 – 3
6S1–44361–12	32 – 3
	34 – 3
6D0–44362–01	32 – 17
	34 – 17
6D0–44365–00	32 – 18
	34 – 18
6E5–44365–00	31 – 22
	32 – 1
	33 – 24
	34 – 1
	50 – 20
663–44366–00	31 – 6
	33 – 8
6D0–44366–00	32 – 19
	34 – 19
6E5–44366–00	29 – 49
	32 – 2
	34 – 2
	50 – 14
6D0–44367–00	32 – 16
	34 – 16
6P2–44391–00	22 – 16
61A–44511–01	26 – 31
69J–44514–00	26 – 23
6G5–44526–00	25 – 3
69J–44532–00	26 – 26
69J–44533–00	26 – 30
68F–44533–01	3 – 35
69J–44551–00–8D	26 – 10
61A–44552–01–CA	26 – 21
60X–44555–00	26 – 13
61A–44575–00	26 – 12
69J–45111–10–8D	29 – 27

PART NO. CODIGO Nº	REF. NO.
69J–45113–20	29 – 29
	50 – 13
69J–45123–00	29 – 26
	50 – 12
69J–45127–00	29 – 25
	50 – 11
69J–45151–00–8D	23 – 8
69J–45152–10	29 – 33
61A–45155–00	29 – 37
69J–45159–00	29 – 51
69J–45181–10–9S	29 – 20
69J–45211–02–8D	29 – 48
61A–45214–11	32 – 10
	34 – 10
61A–45215–11	32 – 11
	34 – 11
6G5–45251–02	1 – 16
	25 – 2
6FJ–45300–00–8D	31 – 1
6FK–45300–00–8D	33 – 1
6FJ–45300–10–8D	31 – 1
6FK–45300–10–8D	33 – 1
6DX–45301–00–8D	31 – 2
	33 – 2
69J–45318–01	29 – 35
61A–45321–01	31 – 11
	33 – 13
61A–45331–00–9S	31 – 30
	33 – 32
6DX–45332–00	31 – 57
6DY–45332–00	33 – 59
688–45341–10	31 – 8
	33 – 10
6E5–45344–00	31 – 39
	33 – 41
6D0–45361–00–8D	31 – 68
	33 – 73
61A–45371–00	1 – 19
	32 – 14
	34 – 14
6D0–45375–01	32 – 9
	34 – 9
61A–45376–00	31 – 10
	33 – 12
61A–45378–00	29 – 42
61B–45383–00	33 – 64
6DY–45384–00	33 – 65
6P2–45501–01	31 – 42

PART NO. CODIGO Nº	REF. NO.
6P2–45501–01	33 – 44
6P2–45501–11	31 – 42
	33 – 44
61B–45538–01	33 – 4
6FJ–45550–00	31 – 71
6FK–45550–00	33 – 76
61A–45567–00	31 – 5
	33 – 7
61A–45567–10	31 – 5
	33 – 7
61A–45567–20	31 – 5
	33 – 7
61A–45567–30	31 – 5
	33 – 7
61A–45567–40	31 – 5
	33 – 7
61A–45567–50	31 – 5
	33 – 7
61A–45567–60	31 – 5
	33 – 7
61A–45577–00	31 – 61
69K–45577–00	33 – 66
61A–45577–10	31 – 61
69K–45577–10	33 – 66
61A–45577–20	31 – 61
69K–45577–20	33 – 66
61A–45577–30	31 – 61
69K–45577–30	33 – 66
61A–45577–40	31 – 61
69K–45577–40	33 – 66
61A–45577–50	31 – 61
69K–45577–50	33 – 66
61A–45577–60	31 – 61
69K–45577–60	33 – 66
6P2–45578–00	31 – 60
6K1–45578–01	33 – 63
6K1–45578–10	33 – 63
6P2–45578–10	31 – 60
6K1–45578–20	33 – 63
6P2–45578–20	31 – 60
6K1–45578–30	33 – 63
6P2–45578–30	31 – 60
6K1–45578–40	33 – 63
6P2–45578–40	31 – 60
6K1–45578–50	33 – 63
6K1–45578–60	33 – 63
61A–45587–00	31 – 33
	33 – 35

PART NO. CODIGO Nº	REF. NO.
61A–45587–10	31 – 33
	33 – 35
61A–45587–20	31 – 33
	33 – 35
61A–45587–30	31 – 33
	33 – 35
61A–45587–40	31 – 33
	33 – 35
61A–45587–50	31 – 33
	33 – 35
61A–45587–60	31 – 33
	33 – 35
69J–45611–00	31 – 45
69K–45611–00	33 – 47
69J–45631–00	31 – 49
	33 – 51
61A–45632–00	31 – 48
	33 – 50
61A–45633–00	31 – 50
	33 – 52
61A–45634–01	31 – 47
	33 – 49
61A–45635–00	31 – 52
	33 – 54
61B–45641–01	33 – 48
61A–45641–02	31 – 46
6H1–45668–00	31 – 51
	33 – 53
6D0–45970–00	32 – 25
6D1–45970–00	34 – 25
6K1–45970–01	34 – 25
6G5–45970–02	32 – 25
6R1–45970–A1	34 – 25
6R4–45970–A1	32 – 25
61A–45972–00	32 – 25
61B–45972–00	34 – 25
6D0–45972–00	32 – 25
6D1–45972–00	34 – 25
6K1–45972–01	34 – 25
6G5–45972–02	32 – 25
6R1–45972–A0	34 – 25
6R4–45972–A0	32 – 25
61A–45974–00	32 – 25
61B–45974–00	34 – 25
6K1–45974–02	34 – 25
6G5–45974–03	32 – 25
6R1–45974–A0	34 – 25
6R4–45974–A0	32 – 25

PART NO. CODIGO Nº	REF. NO.
6R1–45976–A0	34 – 25
6R4–45976–A0	32 – 25
6R4–45976–A0	32 – 25
61B–45978–00	34 – 25
6D0–45978–00	32 – 25
6D1–45978–00	34 – 25
6K1–45978–02	34 – 25
6G5–45978–03	32 – 25
6R1–45978–A0	34 – 25
6R4–45978–A0	32 – 25
69J–45987–00	32 – 20
	34 – 20
688–45997–01	32 – 21
	34 – 21
6BR–45B70–00	32 – 26
6BS–45B70–00	34 – 26
6BR–45B72–00	32 – 26
6BS–45B72–00	34 – 26
6BR–45B74–00	32 – 26
6BS–45B74–00	34 – 26
6P2–46241–02	7 – 24
704–48119–50	39 – 11
704–48119–60	40 – 11
EL8–48127–00	39 – 24
	40 – 24
704–48128–00	40 – 64
703–48128–10	38 – 39
703–48129–00	38 – 41
704–48129–10	39 – 2
	40 – 2
704–48129–60	40 – 69
704–48144–10	39 – 53
704–48144–20	40 – 53
703–48152–10	38 – 6
703–48153–00	38 – 61
704–48153–00	39 – 58
	40 – 58
704–48156–00	40 – 65
EL8–48164–00	39 – 42
	40 – 42
704–48166–00	39 – 59
	40 – 70
704–48167–20	39 – 62
704–48167–30	40 – 72
704–48176–00	39 – 54
704–48176–10	40 – 54
704–48178–00	40 – 71
704–48178–10	39 – 61

PART NO. CODIGO Nº	REF. NO.
703–48189–00	38 – 19
EL8–48191–00	39 – 17
	40 – 17
704–48192–00	39 – 46
	40 – 46
704–48192–P0	39 – 55
	40 – 55
703–48198–00	38 – 16
704–48205–R0	37 – 2
	39 – 1
703–48207–22	37 – 1
	38 – 1
704–48207–R0	37 – 3
	40 – 1
703–48211–10	38 – 25
703–48212–10	38 – 26
703–48213–10	38 – 27
703–48215–10	38 – 46
704–48215–60	39 – 13
704–48215–70	40 – 13
703–48219–10	38 – 34
704–48219–R0	39 – 52
	40 – 52
703–48221–10	38 – 28
704–48221–R0	39 – 43
	40 – 43
704–48222–10	39 – 33
703–48222–20	38 – 31
704–48222–20	40 – 62
704–48222–30	40 – 33
703–48223–10	38 – 32
704–48224–00	39 – 49
	40 – 49
703–48225–10	38 – 33
704–48225–R0	39 – 45
	40 – 45
703–48227–00	38 – 30
704–48229–10	39 – 36
	40 – 36
704–48229–20	40 – 60
704–48231–00	39 – 26
	40 – 26
703–48232–00	38 – 2
704–48232–P1	39 – 41
	40 – 41
704–48233–00	39 – 56
	40 – 56
703–48234–00	38 – 20

PART NO. CODIGO Nº	REF. NO.
704–48234–00	39 – 51
	40 – 51
703–48235–00	38 – 5
704–48235–00	39 – 57
	40 – 57
703–48236–00	38 – 18
703–48238–00	38 – 24
704–48238–00	39 – 40
	40 – 40
EL8–48241–00	39 – 27
	40 – 27
704–48242–10	39 – 44
	40 – 44
703–48243–00	38 – 17
703–48244–00	38 – 23
EL8–48244–00	39 – 31
	40 – 30
703–48245–00	38 – 13
EL8–48245–00	39 – 32
	40 – 31
701–48246–00	39 – 5
	40 – 5
703–48246–00	38 – 29
701–48248–00	38 – 15
	39 – 39
	40 – 39
EL8–48251–00	39 – 3
	40 – 3
703–48252–00	38 – 14
EL8–48254–00	39 – 28
	40 – 28
EL8–48259–00	39 – 7
	40 – 7
704–48261–00	39 – 16
	40 – 16
703–48261–01	38 – 4
704–48262–00	39 – 8
	40 – 8
703–48264–00	38 – 8
704–48264–00	39 – 9
	40 – 9
704–48265–00	39 – 4
	40 – 4
703–48265–10	38 – 11
703–48268–00	38 – 7
703–48271–00	38 – 3
704–48271–00	39 – 23
	40 – 23

PART NO. CODIGO Nº	REF. NO.
EL8–48279–00	39 – 50
	40 – 50
703–48281–00	38 – 35
704–48281–00	39 – 14
	40 – 14
EL8–48281–00	39 – 12
	40 – 12
704–48283–00	39 – 18
	40 – 18
703–48284–10	38 – 58
704–48284–P0	39 – 60
	40 – 67
704–48285–20	40 – 68
701–48287–00	38 – 45
704–48287–00	39 – 21
	40 – 21
703–48293–10	38 – 44
701–48320–50	37 – 4
701–48320–60	37 – 4
701–48320–80	37 – 4
6E5–48344–00	24 – 5
	24 – 41
703–48345–01	38 – 21
	39 – 20
	40 – 20
701–48350–00	37 – 4
701–48350–20	37 – 4
701–48350–80	37 – 4
703–48358–00	38 – 22
	39 – 25
	40 – 25
6P2–48531–00	24 – 1
63P–48538–00	24 – 3
6E5–61301–01	36 – 1
6E5–61303–00	36 – 5
6E5–61311–11	36 – 3
6E5–61313–00	36 – 2
6E5–61315–00	36 – 4
6E5–61350–02	35 – 1
6E5–61351–01	35 – 2
6E5–61355–00	35 – 5
6P2–81128–00	17 – 23
6P2–81332–00	17 – 15
6P2–81337–02	17 – 17
6P2–81443–00	17 – 3
6P2–81450–00	17 – 1
6P2–81460–00	17 – 2
6P2–81614–10	19 – 2

NUMERICAL INDEX
INDICE NUMERICO

PART NO. CODIGO Nº	REF. NO.
6BR–81800–01	21 – 1
69J–81801–00	21 – 5
67F–81807–00	21 – 10
67F–81808–00	21 – 8
67F–81809–00	21 – 19
67F–81810–00	21 – 3
67F–81813–00	21 – 6
67F–81820–00	21 – 7
67F–81821–00	21 – 13
6K7–81826–11	21 – 24
69J–81828–00	21 – 25
67F–81830–00	21 – 17
67F–81832–00	21 – 11
67F–81836–00	21 – 12
6C5–81839–00	21 – 21
67F–8183R–00	21 – 15
60V–8183T–00	21 – 18
6P2–8183X–00	19 – 27
69J–81840–00	21 – 4
67F–81841–00	21 – 14
69J–81842–00	21 – 20
67F–81846–00	21 – 26
67F–81850–00	21 – 2
67F–81857–00	21 – 9
6C5–81869–00	21 – 23
67F–81891–00	21 – 16
6P2–81919–50	19 – 48
6P2–81919–60	17 – 21
6P2–81919–70	17 – 22
6Y8–81920–01	42 – 7
6Y8–81920–11	42 – 9
	43 – 1
6P2–81923–00	19 – 49
6P2–81925–01	19 – 12
63P–81941–00	21 – 22
6P2–81948–10	19 – 17
69J–81949–02	20 – 23
63P–81950–00	19 – 23
68V–81950–00	18 – 19
	44 – 9
704–81950–10	40 – 59
6P2–81952–00	18 – 18
6P2–81960–11	19 – 1
6P2–81972–00–9S	19 – 5
60V–81975–A0	19 – 4
6EE–81994–40	17 – 25
6EE–81994–50	17 – 26
6AH–81996–00	22 – 61

PART NO. CODIGO Nº	REF. NO.
6P2–82105–02	19 – 53
6P2–82113–00	19 – 39
6P2–82119–00	19 – 31
69J–82147–00	25 – 30
6E5–82148–00	25 – 7
6H1–82148–00	25 – 5
6E5–82149–00	26 – 16
6CB–82151–00	19 – 34
6G1–82151–00	42 – 14
6CB–82151–20	19 – 35
6CB–82151–30	19 – 36
6CB–82151–40	19 – 33
6P2–82170–20	19 – 32
6P2–82310–01	18 – 12
6P2–82314–10	18 – 14
6P2–82316–00	18 – 3
6A0–82317–00	18 – 9
	19 – 20
663–82317–01	17 – 18
6P2–82380–00	10 – 10
6P2–82389–10	3 – 53
6Y8–82507–00	44 – 10
6R5–82510–03	41 – 4
6Y8–82510–03	44 – 3
703–82510–44	38 – 48
6Y8–82521–11	42 – 11
6Y8–82521–51	42 – 12
	43 – 3
703–82531–00	38 – 51
6K1–82532–00	38 – 50
6YC–82532–00	42 – 5
703–82532–00	41 – 6
	44 – 5
703–82540–00	38 – 55
704–82540–30	40 – 10
704–82540–40	39 – 10
6P3–82553–00	20 – 15
6Y8–82553–21	43 – 2
6Y8–82553–31	42 – 10
6P2–82554–00	22 – 23
682–82556–00	38 – 53
	41 – 8
	44 – 7
6P2–82560–01	3 – 51
69J–82563–01	20 – 14
703–82563–21	38 – 57
704–82563–60	39 – 35
704–82563–70	40 – 35

PART NO. CODIGO Nº	REF. NO.
704–82563–80	40 – 61
704–82563–90	40 – 66
704–82563–90	44 – 1
6R5–82570–07	41 – 1
6Y8–82571–01	44 – 2
704–82571–02	41 – 2
6K1–82575–01	44 – 6
688–82575–02	38 – 52
	41 – 7
703–82577–00	38 – 49
676–82577–01	41 – 5
	44 – 4
6P2–8257V–00	17 – 4
64D–82581–00	41 – 9
	44 – 11
6DA–82582–00	20 – 2
6DA–82582–10	20 – 3
6Y8–82582–11	20 – 4
	42 – 15
69J–82587–00	20 – 18
6E5–82588–00	22 – 19
61A–82588–01	24 – 16
6R5–82588–01	41 – 3
6P2–82588–10	3 – 52
6P2–82589–10	20 – 6
6P2–8258A–00	10 – 23
61B–8258A–01	44 – 19
688–8258A–20	38 – 54
688–8258A–30	20 – 24
6K1–8258A–40	41 – 18
704–82590–10	40 – 63
6P2–82590–61	20 – 1
703–82591–00	38 – 59
703–82592–00	38 – 60
6P2–82594–00	22 – 57
704–82594–00	39 – 34
	40 – 34
60V–8259F–00	24 – 14
69J–8259F–00	24 – 15
6P2–8259M–10	19 – 47
6R5–83383–00	41 – 13
	44 – 8
703–83383–11	38 – 56
6YC–83512–00	42 – 2
6Y8–83553–01	42 – 13
6E5–83558–00	29 – 39
6Y8–8356N–01	42 – 6
6P2–83597–00	3 – 55

PART NO. CODIGO Nº	REF. NO.
69J–83614–10	20 – 19
6P2–83635–00	18 – 21
6AW–83651–00	3 – 54
6P2–83652–00	48 – 3
6AW–8366B–01	45 – 2
	46 – 2
	47 – 2
63P–8366C–00	46 – 3
	47 – 3
60V–8366D–00	45 – 3
	46 – 5
69J–8366G–02	22 – 52
69J–83672–11	26 – 1
6YC–83710–01	42 – 1
6P2–85075–00	18 – 28
	18 – 31
6Y8–85371–01	42 – 8
6CB–85544–10	19 – 37
689–85547–00	15 – 1
6P2–85580–00	17 – 6
6P2–85722–00	20 – 10
6P2–85780–00	3 – 56
61A–85790–00	18 – 25
63P–85886–00	8 – 31
6P2–85896–00	18 – 27
6P2–85897–00	18 – 30
6DX–8591A–11	18 – 1
6C5–86120–00	10 – 20
6CB–86120–00	6 – 19
6YC–87278–00	42 – 3
6P2–8A410–01	24 – 37
63P–8A4L0–11	47 – 1
60V–8A4L1–16	45 – 1
63P–8A4L2–04	46 – 1
K0F–A3741–00	7 – 5
K0F–A3742–00	7 – 6
K0F–A3743–00	7 – 3
K0F–A3751–00	7 – 8
K0F–A3751–10	7 – 8
K0F–A3751–20	7 – 8
K0F–A3751–30	7 – 8
K0F–A3751–40	7 – 8
K0F–A3751–50	7 – 8
K0F–A3751–60	7 – 8
K0F–A3751–70	7 – 8
K0F–A3751–80	7 – 8
K0F–A3751–90	7 – 8
K0F–A3751–A0	7 – 8

PART NO. CODIGO Nº	REF. NO.
K0F–A3751–B0	7 – 8
K0F–A3751–C0	7 – 8
K0F–A3751–D0	7 – 8
K0F–A3751–E0	7 – 8
K0F–A3751–F0	7 – 8
K0F–A3751–G0	7 – 8
K0F–A3751–H0	7 – 8
K0F–A3751–J0	7 – 8
K0F–A3751–K0	7 – 8
K0F–A3751–L0	7 – 8
K0F–A3751–M0	7 – 8
K0F–A3751–N0	7 – 8
K0F–A3751–P0	7 – 8
K0F–A3751–R0	7 – 8
K0F–A3751–S0	7 – 8
K0F–A3751–T0	7 – 8
K0F–A3753–00	7 – 8
K0F–A3753–10	7 – 8
K0F–A3753–20	7 – 8
K0F–A3753–30	7 – 8
K0F–A3753–40	7 – 8
K0F–A3753–50	7 – 8
K0F–A3753–60	7 – 8
K0F–A3753–70	7 – 8
6P2–W0001–03	49 – 1
6P2–W0001–21	50 – 1
6S1–W0078–00	1 – 20
	50 – 26
6P2–W009A–04–9S	5 – 1
6P2–W009C–04–9S	5 – 9
90101–09M70	36 – 9
90101–12047	25 – 45
90101–12M05	25 – 45
	25 – 45
90101–14002	26 – 17
90101–14003	26 – 27
90105–05012	3 – 25
	3 – 61
90105–06035	6 – 21
90105–06M07	5 – 19
90105–06M09	3 – 14
	6 – 18
90105–08049	31 – 65
	33 – 70
90105–10M00	32 – 15
	34 – 15
90109–06M80	3 – 23
	3 – 59

PART NO. CODIGO Nº	REF. NO.
90109–06M81	22 – 20
	45 – 4
	46 – 6
90109–06M82	22 – 5
	22 – 29
	22 – 38
	22 – 49
90109–06M86	20 – 20
	22 – 22
	22 – 24
	22 – 46
	22 – 53
	22 – 58
	24 – 2
90109–06MA1	17 – 20
90109–08019	24 – 12
90110–06038	8 – 5
90110–06150	5 – 40
	5 – 45
90111–06142	23 – 5
90111–06144	23 – 4
	23 – 9
90116–10012	29 – 52
90116–10027	3 – 12
90119–06025	3 – 48
90119–06027	6 – 13
90119–06122	12 – 11
90119–06126	24 – 40
90119–06269	8 – 10
90119–06M10	31 – 14
	33 – 16
90119–06M17	15 – 13
	29 – 44
90119–06M35	8 – 24
90119–06M59	10 – 16
	18 – 11
90119–06M92	18 – 17
90119–06M95	19 – 22
90119–06MA3	19 – 6
90119–06MA4	3 – 19
90119–06MA5	19 – 7
90119–06MA6	8 – 12
90119–07001	5 – 7
90119–07234	5 – 8
	5 – 15
90119–07235	5 – 14
90119–08009	3 – 11
90119–08021	5 – 26

NUMERICAL INDEX
INDICE NUMERICO

PART NO. CODIGO Nº	REF. NO.
90119–08021	5 – 31
90119–08102	29 – 2
90119–08M14	31 – 29
	33 – 31
	50 – 34
90119–08M22	22 – 10
90119–08M66	3 – 7
90119–08M91	5 – 25
	5 – 30
90119–10007	29 – 30
90119–10008	32 – 8
	34 – 8
90119–10009	29 – 55
90119–10024	25 – 27
	26 – 22
	26 – 32
90119–10050	7 – 21
90119–10M07	7 – 28
90119–10MA2	32 – 8
	34 – 8
90149–05M05	41 – 14
	44 – 15
90151–06M02	6 – 11
90152–05003	32 – 12
	34 – 12
90155–10004	5 – 24
	5 – 29
90170–09M05	36 – 10
90170–14M06	36 – 6
90170–16M19	31 – 44
	33 – 46
90171–18M04	32 – 23
	34 – 23
90173–06001	23 – 2
90179–08003	21 – 29
90179–24002	17 – 14
90183–02M03	31 – 54
	33 – 56
90185–05002	32 – 13
	34 – 13
90185–09M01	35 – 6
	36 – 11
90185–14M00	26 – 19
	26 – 28
90185–22M11	25 – 22
90201–02M00	31 – 53
	33 – 55
90201–06068	22 – 36

PART NO. CODIGO Nº	REF. NO.
90201–06068	22 – 44
90201–08023	31 – 66
	33 – 71
90201–09M02	24 – 35
90201–10M01	7 – 29
90201–10M20	35 – 7
90201–10M76	36 – 8
90201–12426	25 – 47
90201–13M01	25 – 46
90201–15M58	26 – 18
90201–16015	26 – 24
90201–16016	26 – 15
90201–16M00	31 – 43
	33 – 45
90201–186F1	6 – 15
	49 – 9
90201–24014	17 – 13
90201–26M59	25 – 21
90201–40M00	26 – 6
90201–42014	31 – 36
	33 – 38
90202–08M20	24 – 23
90202–28M46	26 – 25
90202–32M19	26 – 14
90202–40M47	26 – 9
90206–14N50	28 – 2
90206–15M18	22 – 33
	22 – 41
90249–06M19	25 – 37
90269–05005	22 – 51
90280–04M05	31 – 25
	33 – 27
	50 – 35
90280–05015	17 – 12
90340–08002	31 – 7
	33 – 9
90340–14M06	30 – 6
	48 – 1
90340–18M09	6 – 14
90344–51019	5 – 4
	5 – 12
90386–06M12	24 – 25
90386–10M16	25 – 35
90386–12069	24 – 11
90386–15M73	22 – 32
	22 – 40
90386–18M14	25 – 43
	27 – 24

PART NO. CODIGO Nº	REF. NO.
90386–18M63	25 – 42
90386–25M31	25 – 20
90386–25M31	26 – 7
90386–90M90	24 – 34
90387–06037	29 – 11
90387–06044	18 – 15
90387–06119	18 – 10
	19 – 21
90387–06263	30 – 9
90387–06289	10 – 18
	15 – 15
90387–06M26	20 – 7
90387–08M37	22 – 12
90387–10M05	25 – 38
90387–10M61	35 – 3
90430–05002	3 – 26
	3 – 62
	49 – 12
90430–06M03	5 – 20
90430–08003	1 – 18
	31 – 9
	33 – 11
	50 – 15
90430–14115	46 – 4
	47 – 4
	48 – 2
90430–14M09	1 – 17
	30 – 7
	50 – 3
90445–07010	29 – 41
90445–07012	29 – 41
90445–07017	45 – 6
	46 – 8
90445–09040	9 – 1
90445–09041	9 – 12
90445–09097	9 – 14
90445–09220	9 – 15
90445–09224	9 – 13
90445–09304	9 – 32
90445–11028	23 – 17
90445–11182	2 – 18
90445–11699	2 – 17
90445–11M27	2 – 16
90445–11M47	23 – 11
90445–13511	15 – 3
90445–13M01	16 – 2
90446–10M01	9 – 9
90447–07013	45 – 7

PART NO. CODIGO Nº	REF. NO.
90447–07013	46 – 9
90447–13009	23 – 12
90462–08026	19 – 41
90462–08032	18 – 32
90462–20001	22 – 21
90464–06001	17 – 5
90464–09010	24 – 20
90464–09013	9 – 26
90464–09M47	22 – 25
90464–10M57	20 – 16
90464–11121	18 – 5
90464–12009	14 – 16
	15 – 20
	15 – 23
90464–12010	14 – 14
	15 – 21
90464–12012	14 – 1
	14 – 17
90464–13249	18 – 6
	18 – 23
90464–14010	20 – 12
90464–18004	11 – 21
	11 – 22
	20 – 21
	22 – 54
	23 – 20
90464–18005	14 – 15
90464–19M45	18 – 4
	20 – 9
90464–20011	8 – 29
90464–20024	15 – 22
90464–20258	22 – 56
90464–21002	9 – 35
90464–23199	18 – 8
90464–60067	9 – 10
	9 – 33
90464–99004	8 – 23
90465–06M86	24 – 19
90465–08M83	25 – 16
	25 – 24
90465–11M10	3 – 57
	8 – 30
	9 – 4
	9 – 11
	9 – 27
	9 – 28
	9 – 29
	9 – 31

PART NO. CODIGO Nº	REF. NO.
90465–11M10	15 – 5
	15 – 19
	15 – 24
	22 – 14
	23 – 18
	24 – 18
	25 – 23
	29 – 40
	45 – 5
	46 – 7
90465–11M59	3 – 32
90465–13M18	8 – 20
	19 – 18
	20 – 13
	20 – 22
90465–14M66	18 – 7
	19 – 19
	20 – 5
	20 – 8
90467–08M18	5 – 47
	9 – 30
	9 – 36
	48 – 6
90467–09M03	9 – 5
90467–09M09	9 – 37
90468–18008	24 – 6
	24 – 24
	24 – 42
90480–06M19	16 – 4
90480–10M23	10 – 17
90480–12314	17 – 19
90480–14018	15 – 14
90480–14M17	23 – 6
90480–22M81	22 – 11
90501–10M77	31 – 55
	33 – 57
90501–11M10	31 – 17
	33 – 19
90501–12082	24 – 29
90501–450A2	31 – 38
	33 – 40
90506–16003	25 – 40
90506–18M40	22 – 47
90508–20020	24 – 13
90560–12M01	35 – 4
91318–05025	27 – 59
91318–05040	27 – 64
91490–20015	24 – 36

PART NO. CODIGO Nº	REF. NO.
91490–40030	32 – 24
	34 – 24
91690–30010	24 – 4
	24 – 31
91690–30020	25 – 39
91690–40010	6 – 12
91809–08006	5 – 6
	5 – 13
91814–18002	3 – 4
92780–06020	39 – 29
	40 – 29
92903–05100	41 – 11
	41 – 16
	44 – 13
92903–05600	41 – 17
92903–06600	19 – 26
92903–08100	19 – 52
92903–08600	21 – 28
92907–04600	5 – 36
92990–05100	44 – 17
92990–05300	39 – 37
	40 – 37
92990–05600	44 – 18
92990–06100	2 – 6
92990–06300	39 – 48
	40 – 48
92990–08600	38 – 38
92990–10600	18 – 26
92990–18200	32 – 22
	34 – 22
92995–06100	17 – 10
	19 – 29
	19 – 45
92995–06600	2 – 10
	15 – 17
	17 – 11
	19 – 30
	19 – 43
	19 – 46
	25 – 9
	25 – 18
	25 – 26
92995–08600	19 – 14
	19 – 16
	31 – 41
	31 – 70
	33 – 43
	33 – 75

NUMERICAL INDEX
INDICE NUMERICO

PART NO. CODIGO Nº	REF. NO.
92995–10100	32 – 6
	34 – 6
92995–10600	29 – 53
	32 – 7
	34 – 7
92995–14600	26 – 20
	26 – 29
93101–28M16	31 – 31
	33 – 33
	50 – 22
93101–30002	31 – 63
	33 – 68
	50 – 24
93102–38008	7 – 23
	49 – 19
93102–63004	4 – 3
	49 – 18
93106–09014	31 – 13
	33 – 15
	50 – 17
93106–19N50	27 – 5
93210–064A5	27 – 51
93210–08391	27 – 48
93210–09165	24 – 33
	28 – 18
93210–16275	35 – 9
93210–17239	27 – 22
93210–19MJ1	3 – 39
	49 – 15
93210–19MJ3	8 – 26
	30 – 21
	49 – 22
93210–24M79	3 – 50
	49 – 23
93210–25552	3 – 38
	30 – 18
	49 – 14
93210–25647	3 – 41
	49 – 16
93210–28543	29 – 9
	50 – 6
93210–347A1	29 – 8
	50 – 5
93210–35321	26 – 8
93210–37160	31 – 21
	33 – 23
	50 – 19
	50 – 29

PART NO. CODIGO Nº	REF. NO.
93210–55M14	31 – 37
	33 – 39
	50 – 23
93210–64488	31 – 12
	33 – 14
	50 – 16
93210–66001	28 – 15
93210–86M38	31 – 20
	33 – 22
	50 – 18
	50 – 28
93211–04384	31 – 64
	33 – 69
	50 – 25
93306–210U0	31 – 59
93311–83280	31 – 3
	33 – 3
93315–43064	31 – 62
	33 – 67
93315–660W3	33 – 5
93317–330U2	31 – 32
	33 – 34
93317–62891	31 – 72
	33 – 77
93332–00048	33 – 61
93332–000W1	31 – 4
93341–34019	31 – 35
	33 – 37
93341–440U5	33 – 62
93341–670V0	33 – 6
93341–93020	31 – 34
	33 – 36
93399–999T6	28 – 3
93410–18M05	25 – 44
93410–37M04	26 – 11
93420–36M01	29 – 36
93430–06024	38 – 12
	39 – 6
	40 – 6
93450–37097	31 – 73
	33 – 78
93501–04011	31 – 56
	33 – 58
93501–04M02	24 – 28
93501–08001	27 – 47
93503–16003	27 – 37
93505–32038	27 – 13
	27 – 34

PART NO. CODIGO Nº	REF. NO.
93604–35236	27 – 60
93605–10108	7 – 10
	7 – 12
	7 – 14
	7 – 16
93606–12019	3 – 3
	3 – 10
	29 – 43
	31 – 28
	33 – 30
	50 – 33
93606–19M23	29 – 24
93608–12M05	29 – 50
	32 – 4
	34 – 4
93608–16M16	29 – 5
	29 – 14
	29 – 31
	30 – 5
93700–06M01	24 – 10
93700–06M03	25 – 15
	25 – 29
93700–09M00	31 – 67
	33 – 72
94702–00400	1 – 6
	5 – 48
95303–05600	41 – 15
95303–05700	41 – 12
	44 – 14
95333–08600	19 – 51
95380–05600	38 – 9
	39 – 22
	40 – 22
	44 – 16
95380–06600	2 – 7
	38 – 43
	39 – 38
	40 – 38
95380–10600	29 – 54
95380–12600	25 – 48
95380–14700	36 – 7
95780–10300	26 – 4
95812–06025	30 – 11
95895–06010	29 – 38
95895–06016	30 – 22
97003–05012	44 – 12
97013–06025	19 – 25
97013–08045	21 – 27

PART NO. CODIGO Nº	REF. NO.
97095–06010	25 – 32
97095–06012	29 – 34
97095–06014	15 – 16
	25 – 25
97095–06016	2 – 9
	19 – 28
	19 – 42
	19 – 44
97095–06020	22 – 35
	22 – 43
97095–06035	17 – 9
97095–08016	19 – 15
	19 – 50
97095–08020	19 – 13
	31 – 69
	33 – 74
97095–08025	31 – 40
	33 – 42
97095–10045	32 – 5
	34 – 5
97303–05012	41 – 10
97380–05025	38 – 10
97380–06018	39 – 19
	40 – 19
97380–08030	38 – 37
97575–06516	8 – 7
	8 – 9
97575–06535	24 – 30
97575–06540	30 – 17
97575–08535	29 – 23
	30 – 4
97575–08540	5 – 21
	8 – 1
	8 – 11
97575–08560	30 – 3
97575–08590	29 – 17
97575–10535	29 – 4
97575–10545	29 – 3
97595–06510	25 – 6
97595–06512	18 – 33
	19 – 9
97595–06516	45 – 9
	46 – 11
97595–06520	3 – 42
	18 – 2
	18 – 13
	18 – 24
	18 – 29

PART NO. CODIGO Nº	REF. NO.
97595–06520	29 – 12
97595–06525	3 – 27
	3 – 36
	25 – 4
97595–06530	5 – 32
	5 – 38
	5 – 43
	48 – 4
97595–06535	20 – 11
	24 – 8
97595–06610	19 – 24
97595–06620	8 – 27
97780–50620	19 – 40
97780–60520	23 – 19
97780–60620	18 – 20
	18 – 22
97885–06010	25 – 11
	25 – 14
97885–06012	25 – 8
	25 – 17
97890–05016	39 – 63
	40 – 73
97890–05025	39 – 15
	40 – 15
97890–06018	39 – 47
	40 – 47
97980–05312	17 – 7
97980–06216	29 – 46
97985–04116	24 – 17
97985–06210	17 – 16
97985–06216	26 – 2
98507–04008	5 – 35
	13 – 35
98580–04006	38 – 40
98780–04015	19 – 11
98780–04016	3 – 17
	6 – 10
98780–05018	39 – 30
	40 – 32
99001–08600	31 – 16
	33 – 18
99002–03600	27 – 40
99530–08012	17 – 8
99530–10114	8 – 2
99530–14016	5 – 23
	5 – 28
	7 – 27
99590–10114	31 – 58

PART NO. CODIGO Nº	REF. NO.
99590–10114	33 – 60