YAMAHA

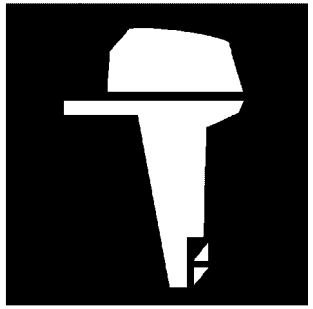

PARTS CATALOGUE
CATALOGO DE REPUESTOS

E75B'24 (6GJB)

YAMAHA GENUINE Parts & Accessories

1Y6GJ-200SA

( )

E75B
PARTS CATALOGUE
©2024 by Yamaha Motor Co., Ltd.
1st edition, September 2024
All rights reserved.
Any reprinting or unauthorized use
without the written permission of
Yamaha Motor Co., Ltd.
is expressly prohibited.
Printed in Japan.

E75B
CATALOGO DE REPUESTOS
©2024 por Yamaha Motor Co., Ltd.
1ª edición, septiembre 2024
Todos los derechos reservados.
Toda reproducción o uso no autorizado
sin el consentimiento escrito de
Yamaha Motor Co., Ltd.
quedan expresamente prohibidos
Impreso en Japón.

FOREWORD

This Parts Catalogue is related to the parts for the model(s) on the cover page. When you are ordering replacement parts, please refer to this Parts Catalogue and quote both part numbers and part names correctly.

1. Modifications or additions which have been made after the issue of the Parts Catalogue will be announced in the Parts News.
   It is advisable that you make the necessary corrections to the Parts Catalogue according to the Parts News.

2. Abbreviations
   The following abbreviations are used in this Parts Catalogue.
   "UR" Use specified parts number.
   "UN" Use as many as needed.
   "AP" Alternate Parts
   "LM" Locally Made (Parts need to be ordered locally)
   "F#" Frame No. (Applicable machine No.)
   "O/S" Over Size

3. The number of components for assembly
   - Parts, which are to be supplied in an assembly, are listed with a dot (.) in front of the part name as shown below.
   - The numeral appearing to the right of each component part indicates the quantity of parts for each assembly unit.

PART NO.	DESCRIPTION	Q'TY	REMARKS
2F5–83310–60	FRONT FLASHER LIGHT ASSY	2	
115–83311–60	.BULB (6V–18W)	1	

4. Applicable colours of graphics are represented in the "REMARKS" as shown below.

PART NO.	DESCRIPTION	Q'TY	REMARKS
2N4–24110–00–X5	FUEL TANK COMP.	2	MXR
3J1–24240–10	.GRAPHIC, FUEL TANK	1	FOR MXR

5. Note that the illustrations for reference in finding parts numbers are not to be used for assembling. When assembling, please use the applicable service manual.

6. The asterisk (*) before a reference number indicates modified items after the first edition.

7. Applicable Serial No.
   Engine Serial No.

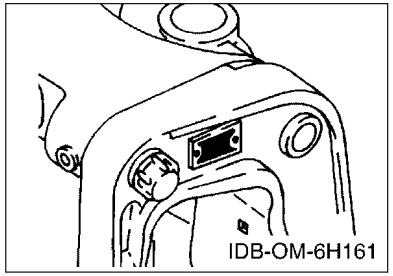

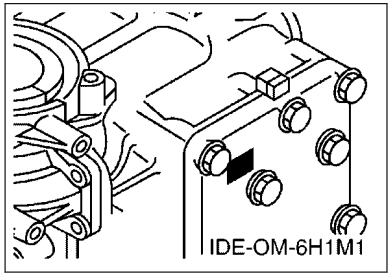

8. Applicable Engine Starting Serial No.

Model	Serial No.	Model	Serial No.
E75B	6GJK-1037491		

9. Applicable Colour Code

Abbreviation	Colour Name	Colour Code
DBN1	DARK BLUISH GRAY 1	008D

10. Quantity Column Information

Column No.	Name Of Q'ty Column	Applicable Model
1	MHD	E75BMHD
2	ED	E75BED
3	EHD	E75BEHD

PROLOGO

Este catálogo de repuestos corresponde a las piezas para el o los modelos que figuran en la página de portada. Al formular el pedido de repuestos, se ruega citar este catálogo y especificar correctamente el número y el nombre de las piezas.

1. Las modificaciones y agregados que se hayan realizado después de la edición de este Catálogo de Repuestos, serán anunciados en las Informaciones de Recambios.
   Es recomendable que se hagan las correcciones necesarias en el Catálogo de Repuestos de acuerdo con las Informaciones de Recambios.

2. Abreviaciones
   En este. Catálogo de Repuestos se emplean las siguientes abreviaciones.
   "UR" Usar el número de partes especificado
   "UN" Usar la cantidad necesaria
   "AP" Piezas sustitutivas
   "LM" Fabricación local (Hay que pedir los repuestos en las cercanías)
   "F#" Nº de bastidor (Nº aplicable a la máquina)
   "O/S" Sobredimensionado

3. La cantidad de componentes para el montaje
   - Los componentes, suministrados como conjunto, se describen con un punto (.) que precede al nombre del parte como se indica a continuación.
   - La numeración que aparece a la derecha de cada descripción indica la cantidad de partes por cada unidad de conjunto.

CODIGO Nº	DESCRIPCION	CANT.	OBSERVACIONES
2F5–83310–60	ENSAMBLAJE DE LA LUZ	2	
115–83311–60	.BOMBILLA (6V–18W)	1	

4. Los colores de los componentes se indican como sigue en la columna de "OBSERVACIONES".

CODIGO Nº	DESCRIPCION	CANT.	OBSERVACIONES
2N4–24110–00–X5	COMP. DEL TANQUE	2	MXR
3J1–24240–10	.GRAFICO, DEL TANQUE	1	PARA MXR

5. Debe tenerse en cuenta que las ilustraciones sirven como guia para la búsqueda de los números de partes y no deben usarse para el montaje. Durante el montaje, se recomienda usar el manual de taller correspondiente.

6. EL asterisco (*) antes del número de referencia indica los elementos modificados después de la primera edición.

7. Números de serie
   Nº de Serie del motor

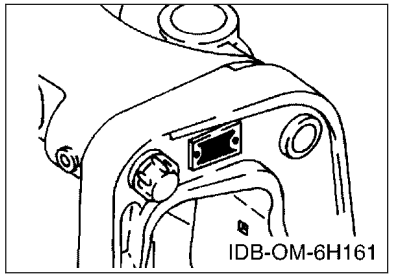

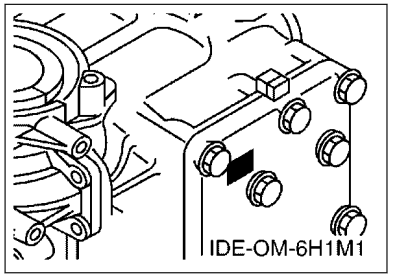

8. Números de serie del motor

Modelo	Nº de serie	Modelo	Nº de serie
E75B	6GJK-1037491		

9. Códigos de color aplicables

Abreviatura	Nombre de color	Código de color
DBN1	DARK BLUISH GRAY 1	008D

10. Informacion para la columna de cantidades

Columna Nº	Nombre de la columna de cantidades	Modelo aplicable
1	MHD	E75BMHD
2	ED	E75BED
3	EHD	E75BEHD

CONTENTS

SCHEDULED SERVICE PARTS.....1
TOP COWLING.....2
CYLINDER & CRANKCASE.....3
CRANKSHAFT & PISTON.....5
INTAKE.....7
CARBURETOR.....9
FUEL.....11
STARTER.....13
GENERATOR.....16
ELECTRICAL 1.....17
ELECTRICAL 2.....18
ELECTRICAL 3.....20
STARTING MOTOR.....21
BOTTOM COWLING.....22
STEERING.....24
CONTROL.....26
BRACKET 1.....29
BRACKET 2.....31
BRACKET 3.....32
UPPER CASING.....34
LOWER CASING & DRIVE 1.....36
LOWER CASING & DRIVE 2.....40
LOWER CASING & DRIVE 3.....44
FUEL TANK.....46
REMOTE CONTROL BOX.....47
REMOTE CONTROL ASSY.....48
OPTIONAL PARTS.....51
REPAIR KIT 1.....52
REPAIR KIT 2.....54

INDEX

NUMERICAL INDEX.....56

CONTENIDO

PARTES DE REPUESTO TEMPORALES..... 1
SOPORTE SUPERIOR..... 2
CYLINDRO & CARTER..... 3
CIGUENAL & PISTON.....5
ADMISION.....7
CARBURADOR..... 9
COMBUSTIBLE..... 11
ARRANQUE..... 13
GENERADOR.....16
EQUIPO ELECTRICO 1..... 17
EQUIPO ELECTRICO 2..... 18
EQUIPO ELECTRICO 3..... 20
MOTOR DE ARRANQUE.....21
CUBIERTA INFERIOR..... 22
DIRECCION.....24
CONTROL..... 26
SOPORTE 1..... 29
SOPORTE 2..... 31
SOPORTE 3..... 32
FUNDA SUPERIOR.....34
IMPULSOR E INFERIOR 1..... 36
IMPULSOR E INFERIOR 2..... 40
IMPULSOR E INFERIOR 3..... 44
DEPOSITO DE COMBUSTIBLE..... 46
CONTROL REMOTO COMPLETO..... 47
CONTROL REMOTO COMPL.....48
PARTES OPCIONALES.....51
ESTUCHE REPARATION 1..... 52
ESTUCHE REPARATION 2..... 54

INDICE

INDICE NUMERICO.....56

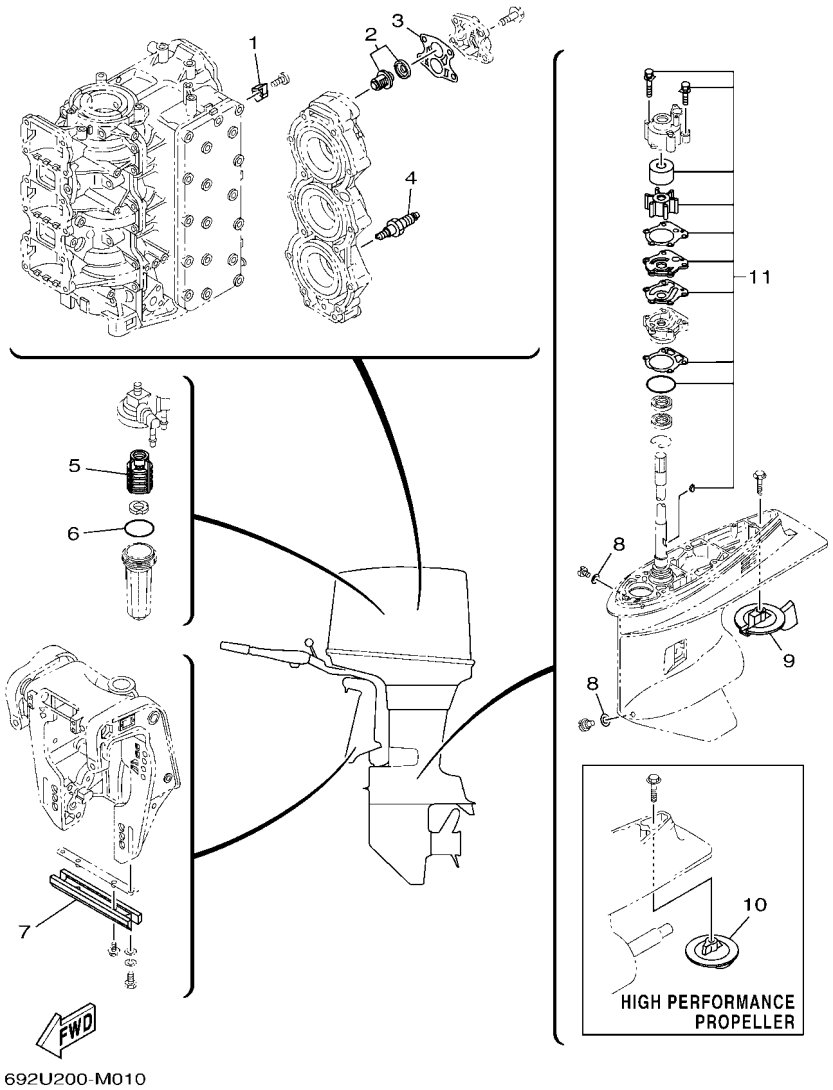

FIG. 1 SCHEDULED SERVICE PARTS — PARTES DE REPUESTO TEMPORALES

REF. NO.	PART NO. CODIGO Nº	DESCRIPTION DESCRIPCION	MHD	ED	EHD			REMARKS OBSERVACIONES
1	688–11325–00	ANODE ANODO	2	2	2			
2	6E5–12411–30	THERMOSTAT TERMOSTAT	1	1	1			
3	688–12414–A1	GASKET, COVER EMPAQUE	1	1	1			
4	94702–00160	PLUG, SPARK (NGK B8HS-10) BUJIA (NGK B8HS-10)	3	3	3			UR UR
	94702–00247	PLUG, SPARK (NGK BR8HS-10) BUJIA (NGK BR8HS-10)	3					UR FOR CAR,CHN UR FOR CAR,CHN
5	61N–24563–00	ELEMENT, FILTER ELEMENTO DEL FILTRO	1	1	1			
6	93210–32738	O-RING ANILLO O	1	1	1			
7	6H1–45251–03	ANODE CATODE	1	1	1			
8	90430–08003	GASKET JUNTA	2	2	2			
9	67F–45371–00	TAB-TRIM QUILLA ESTABILIZADOR	1	1	1			
10	6E5–45371–10	TAB-TRIM QUILLA ESTABILIZADOR	1	1	1			
11	692–W0078–02	WATER PUMP REPAIR KIT ESTUCHE REPARACION BOMBA AGUA	1	1	1			

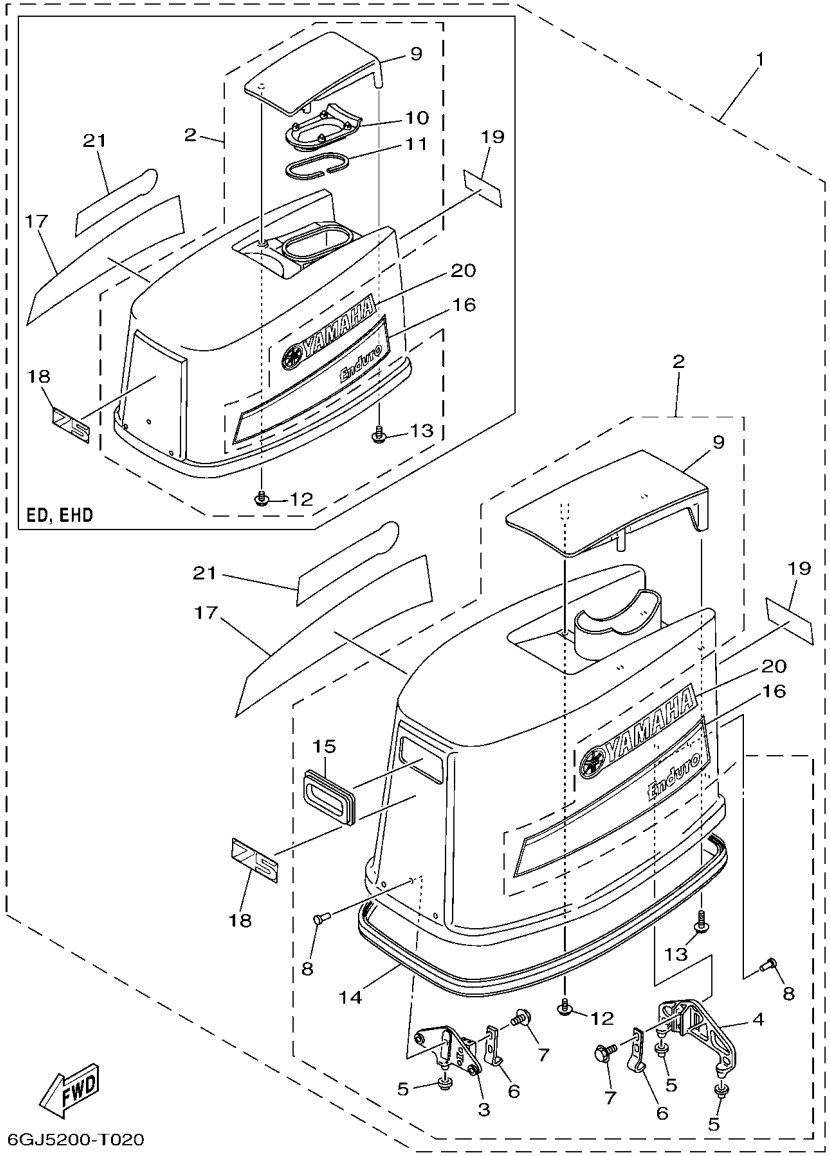

FIG. 2 TOP COWLING — SOPORTE SUPERIOR

REF. NO.	PART NO. CODIGO Nº	DESCRIPTION DESCRIPCION	MHD	ED	EHD			REMARKS OBSERVACIONES
1	692–42610–N2	TOP COWLING ASSY SOPORTE SUPERIOR COMPL.	1					
	692–42610–74	TOP COWLING ASSY SOPORTE SUPERIOR COMPL.		1	1			
2	692–4261A–02	.TOP COWLING W/O GRAPHICS .SOPORTE SUPERIOR SIN GRAFICOS	1					
	688–4261A–12	.TOP COWLING W/O GRAPHICS .SOPORTE SUPERIOR SIN GRAFICOS		1	1			
3	688–42647–00	..HOLDER, CLAMP BAND ..MORDAZA DE ABRAZADERA	1	1	1			
4	692–42649–00	..HOLDER, CLAMP BAND ..MORDAZA DE ABRAZADERA	1					
	688–42649–00	..HOLDER, CLAMP BAND ..MORDAZA DE ABRAZADERA		1	1			
5	663–42662–01	..DAMPER ..AMORTIGUADOR	3	3	3			
6	688–42652–10	..HOOK ..GANCHO	2	2	2			
7	97E95–06618	..BOLT, HEXAGON W/W DEEP RECESS ..TORNILLO HEXAGONAL CON RONDONA	2	2	2			
8	90266–06009	..RIVET ..REMACHE	6	6	6			
9	692–42613–01–8D	..MOLDING, AIR DUCT ..MOLDURA CONDUCTO AIRE	1					
	688–42613–01–8D	..MOLDING, AIR DUCT ..MOLDURA CONDUCTO AIRE		1	1			
10	688–42618–00	..AIR SHROUD, TOP COWLING ..CUBIERTA AIRE PARTE SUPERIOR		1	1			
11	688–42628–00	..SEAL ..SELLO DE GOMA		1	1			
12	97E95–06516	..BOLT, HEXAGON W/W DEEP RECESS ..TORNILLO HEXAGONAL CON RONDONA	2	2	2			
13	97E95–06520	..BOLT, HEXAGON W/W DEEP RECESS ..TORNILLO HEXAGONAL CON RONDONA	2					
	97E95–06525	..BOLT, HEXAGON W/W DEEP RECESS ..TORNILLO HEXAGONAL CON RONDONA		2	2			
14	688–42615–01	..SEAL ..SELLO	1	1	1			
15	697–15761–01	..SEAL, RUBBER 1 ..SELLO DE GOMA 1	1					
16	692–42675–51	.GRAPHIC, SIDE 1 .CALCAMONIA LATERAL 1	1	1	1			
17	692–42676–51	.GRAPHIC, SIDE 2 .CALCAMONIA LATERAL 2	1	1	1			
18	692–42678–51	.GRAPHIC, REAR .CALCAMONIA TRASERA	1	1	1			
19	692–42678–51	.GRAPHIC, REAR .CALCAMONIA TRASERA	1	1	1			
20	688–42681–71	.MARK, COWLING .MARCA DE CUBIERTA	1	1	1			
21	688–42681–71	.MARK, COWLING .MARCA DE CUBIERTA	1	1	1			

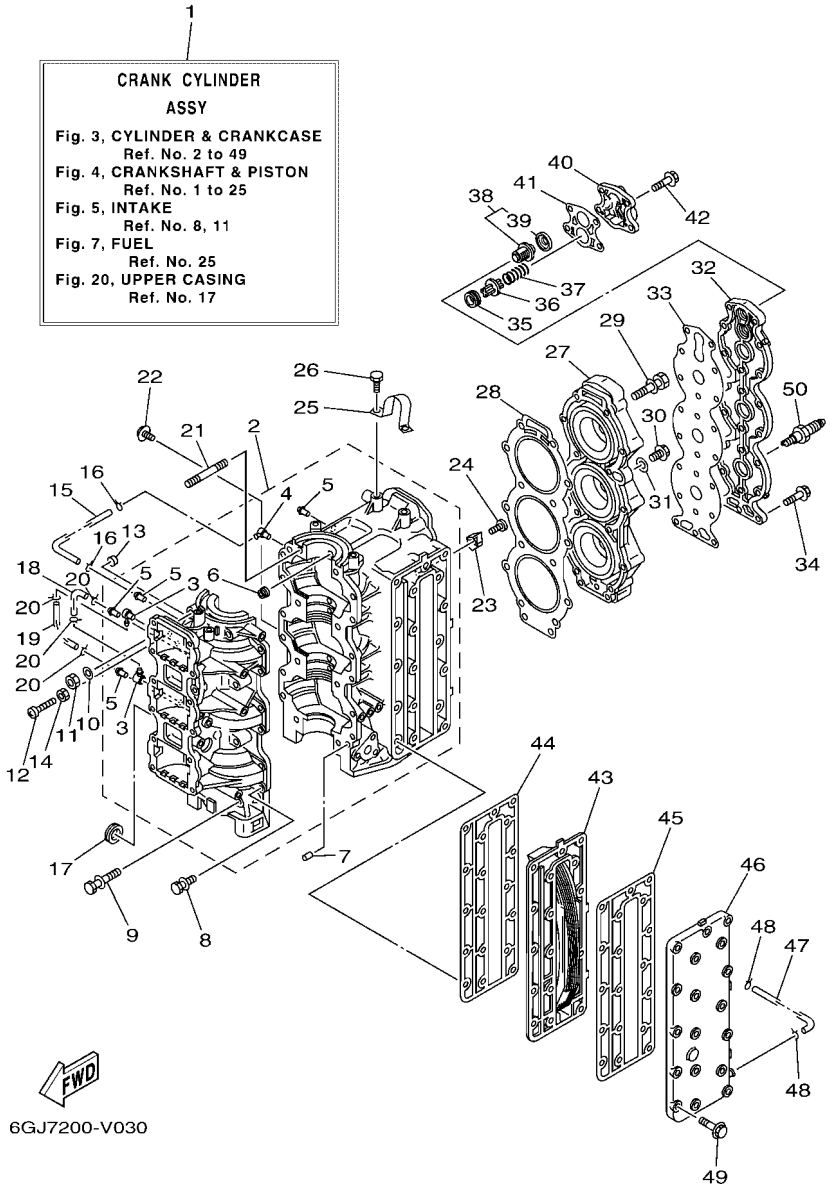

FIG. 3 CYLINDER & CRANKCASE — CYLINDRO & CARTER

REF. NO.	PART NO. CODIGO Nº	DESCRIPTION DESCRIPCION	MHD	ED	EHD			REMARKS OBSERVACIONES
1	692–W0090–46–1S	CRANK CYLINDER ASSY BLOQUE MOTOR COMPLETO	1	1	1			
2	688–15100–07	CRANKCASE ASSY CARTER COMPLETO	1	1	1			
3	688–11370–01	.CHECK VALVE ASSY .VALVULA DE CONTROL COMPL.	2	2	2			
4	650–11370–01	.CHECK VALVE ASSY .VALVULA DE CONTROL COMPL.	1	1	1			
5	624–14485–00	.PIPE, JOINT .TUBO DE UNION	4	4	4			
6	663–11518–01	.LOCK, BEARING .SEGURO BALERO	3	3	3			
7	99530–08012	PIN, DOWEL PASADOR, DE ESPIGA	2	2	2			
8	90119–06M12	BOLT, WITH WASHER TORNILLO CON ARANDELA	12	12	12			
9	90119–10005	BOLT, WITH WASHER TORNILLO CON ARANDELA	6	6	6			
10	90201–10008	WASHER, PLATE ARANDELA PLANA	2	2	2			
11	95313–10600	NUT TUERCA	2	2	2			
12	90157–06014	SCREW, PAN HEAD TORNILLO CABEZA CONICA PLANA	1	1	1			
13	688–44194–00	CAP TAPA	1	1	1			
14	95303–06700	NUT TUERCA	1	1	1			
15	90445–07260	HOSE (L276) TUBO (L276)	1	1	1			
16	90467–06016	CLIP PRESILLA	2	2	2			
17	90480–24M04	GROMMET TAPON		1	1			
18	90445–07M00	HOSE (L100) TUBO (L100)	1	1	1			
19	90445–07M23	HOSE (L180) TUBO (L180)	1	1	1			
20	90467–06016	CLIP PRESILLA	4	4	4			
21	90116–10M06	BOLT, STUD ESPARRAGO	2	2	2			
22	97E95–06512	BOLT, HEXAGON W/W DEEP RECESS TORNILLO HEXAGONAL CON RONDONA	1	1	1			
23	688–11325–00	ANODE ANODO	2	2	2			
24	98780–04015	SCREW, FLAT HEAD TORNILLO, CABEZA PLANA	2	2	2			
25	692–11119–01	HANGER, ENGINE SOPORTE DEL MOTOR	1					
	688–11119–01	HANGER, ENGINE SOPORTE DEL MOTOR		1	1			
26	90101–08002	BOLT TORNILLO	2	2	2			

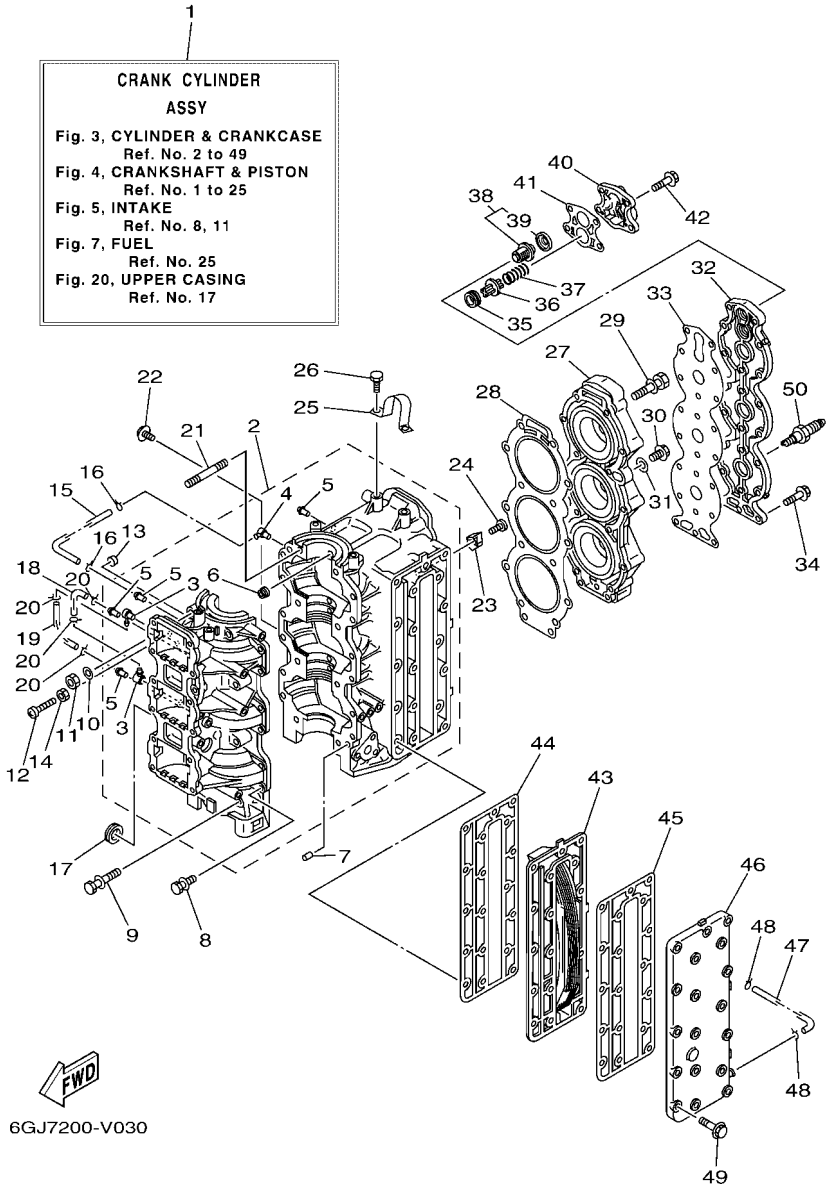

FIG. 3 CYLINDER & CRANKCASE — CYLINDRO & CARTER

REF. NO.	PART NO. CODIGO Nº	DESCRIPTION DESCRIPCION	MHD	ED	EHD			REMARKS OBSERVACIONES
27	692–11111–01–1S	HEAD, CYLINDER 1 CULATA CILINDRO 1	1	1	1			
28	688–11181–A2	GASKET, CYLINDER HEAD 1 JUNTA, DE CULATA 1	1	1	1			
29	90119–08MA8	BOLT, WITH WASHER TORNILLO CON ARANDELA	14	14	14			
30	90340–14M06	PLUG, STRAIGHT SCREW TORNILLO, DE DRENAJE	1	1	1			
31	90430–14115	GASKET JUNTA	1	1	1			
32	688–11191–00–1S	COVER, CYLINDER HEAD 1 TAPA CULATA DE CILINDRO 1	1	1	1			
33	688–11193–A1	GASKET, HEAD COVER 1 EMPAQUE	1	1	1			
34	90119–06MA3	BOLT, WITH WASHER TORNILLO CON ARANDELA	18	18	18			
35	90480–20M05	GROMMET TAPON	1	1	1			
36	688–12416–00	VALVE, PRESSURE CONTROL VALVULA DE CONTROL DE PRESION	1	1	1			
37	90501–16M11	SPRING, COMPRESSION RESORTE DE COMPRESION	1	1	1			
38	6E5–12411–30	THERMOSTAT TERMOSTAT	1	1	1			
39	688–12412–00	.SEAL, THERMOSTAT .SELLO TERMOSTATO	1	1	1			
40	688–12413–00–1S	COVER, THERMOSTAT CUBIERTA TERMOSTATO	1	1	1			
41	688–12414–A1	GASKET, COVER EMPAQUE	1	1	1			
42	90119–06MA5	BOLT, WITH WASHER TORNILLO CON ARANDELA	4	4	4			
43	688–41111–00–1S	INNER COVER, EXHAUST CUBIERTA INTERIOR DE ESCAPE	1	1	1			
44	688–41112–A0	GASKET, EXHAUST INNER COVER EMPAQUE	1	1	1			
45	688–41114–A0	GASKET, EXHAUST OUTER COVER EMPAQUE	1	1	1			
46	688–41113–00–1S	OUTER COVER, EXHAUST CUBOERTA EXTERIOR DE ESCAPE	1	1	1			
47	663–24312–01	PIPE 2 TUBO 2	1	1	1			
48	90467–08004	CLIP PRESILLA	2	2	2			
49	90119–08020	BOLT, WITH WASHER TORNILLO CON ARANDELA	18	18	18			
50	94702–00160	PLUG, SPARK (NGK B8HS-10) BUJIA (NGK B8HS-10)	3	3	3			
	94702–00247	PLUG, SPARK (NGK BR8HS-10) BUJIA (NGK BR8HS-10)	3					FOR CAR,CHN FOR CAR,CHN

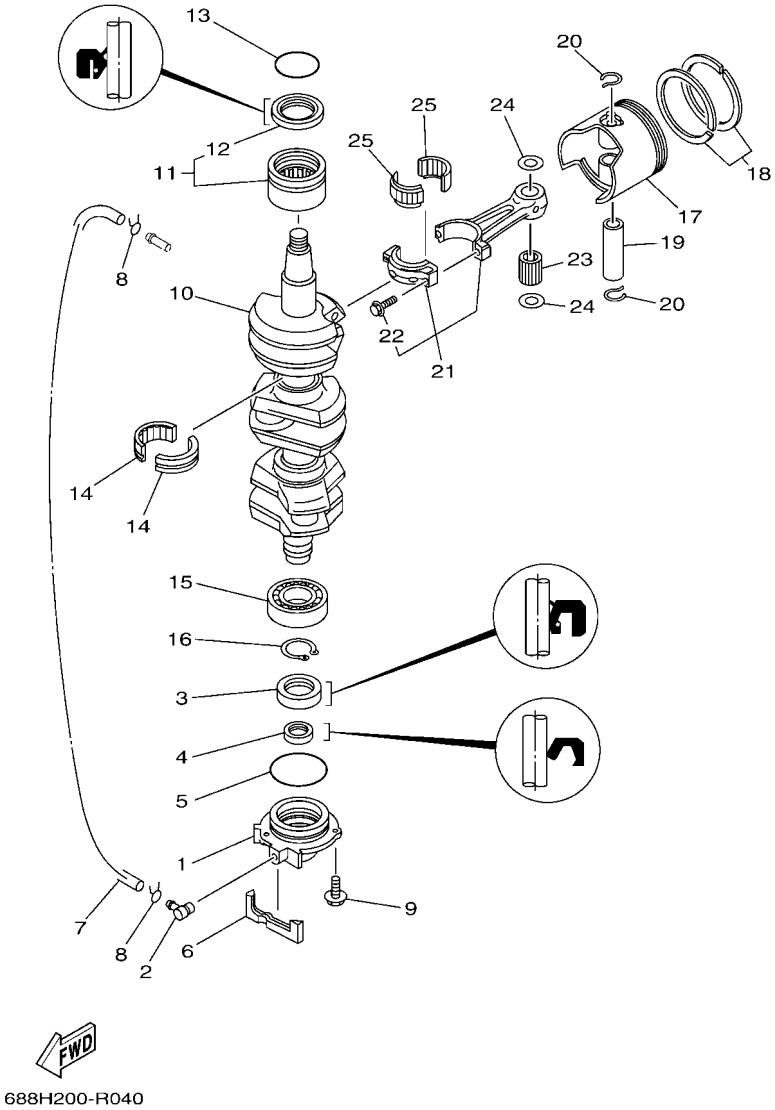

FIG. 4 CRANKSHAFT & PISTON — CIGUENAL & PISTON

REF. NO.	PART NO. CODIGO Nº	DESCRIPTION DESCRIPCION	MHD	ED	EHD			REMARKS OBSERVACIONES
1	6H1–15359–01–94	HOUSING, OIL SEAL CAJA DE SELLO DE ACEITE	1	1	1			
2	688–11370–01	CHECK VALVE ASSY VALVULA DE CONTROL COMPL.	1	1	1			
3	93102–30M05	OIL SEAL SELLO ACEITE	1	1	1			
4	93104–20M02	OIL SEAL SELLO ACEITE	1	1	1			
5	93210–62269	O-RING ANILLO O	1	1	1			
6	688–15379–00	SEAL, CRANKCASE SELLO DE CARTER	1	1	1			
7	90445–07M86	HOSE (L460) TUBO (L460)	1	1	1			
8	90467–06016	CLIP PRESILLA	2	2	2			
9	97E95–06520	BOLT, HEXAGON W/W DEEP RECESS TORNILLO HEXAGONAL CON RONDONA	3	3	3			
10	688–11411–01	CRANKSHAFT CIGUENAL	1	1	1			
11	93310–636U4	BEARING COJINETE DE RODILLOS	1	1	1			
12	93102–36M02	.OIL SEAL .SELLO ACEITE	1	1	1			
13	93210–46M16	O-RING ANILLO O	1	1	1			
14	93310–835U8	BEARING COJINETE DE RODILLOS	2	2	2			
15	93306–206U5	BEARING COJINETE	1	1	1			
16	93410–32M00	CIRCLIP SEGURO	1	1	1			
17	688–11631–03–94	PISTON (STD) PISTON (NORMA)	3	3	3			
	688–11635–03	PISTON (0.25MM O/S) PISTON (0.25MM O/S)	3	3	3			AP AP
	688–11636–03	PISTON (0.50MM O/S) PISTON (0.50MM O/S)	3	3	3			AP AP
18	688–11603–A0	PISTON RING SET (STD) JUEGO DE ANILLOS (NORMA)	3	3	3			
	688–11604–A0	PISTON RING SET (0.25MM O/S) JUEGO DE ANILLOS (0.25MM O/S)	3	3	3			AP AP
	688–11605–A0	PISTON RING SET (0.50MM O/S) JUEGO DE ANILLOS (0.50MM O/S)	3	3	3			AP AP
19	663–11633–00	PIN, PISTON PASADOR, PISTON	3	3	3			
20	688–11634–00	CLIP, PISTON PIN PRESILLA, BULON DE PISTON	6	6	6			
21	688–11650–03	CONNECTING ROD ASSY BIELA COMPLETA	3	3	3			
22	90109–08022	.BOLT .PERNO	2	2	2			
23	93603–21111	PIN, DOWEL PASADOR DE CLAVIJA	84	84	84			

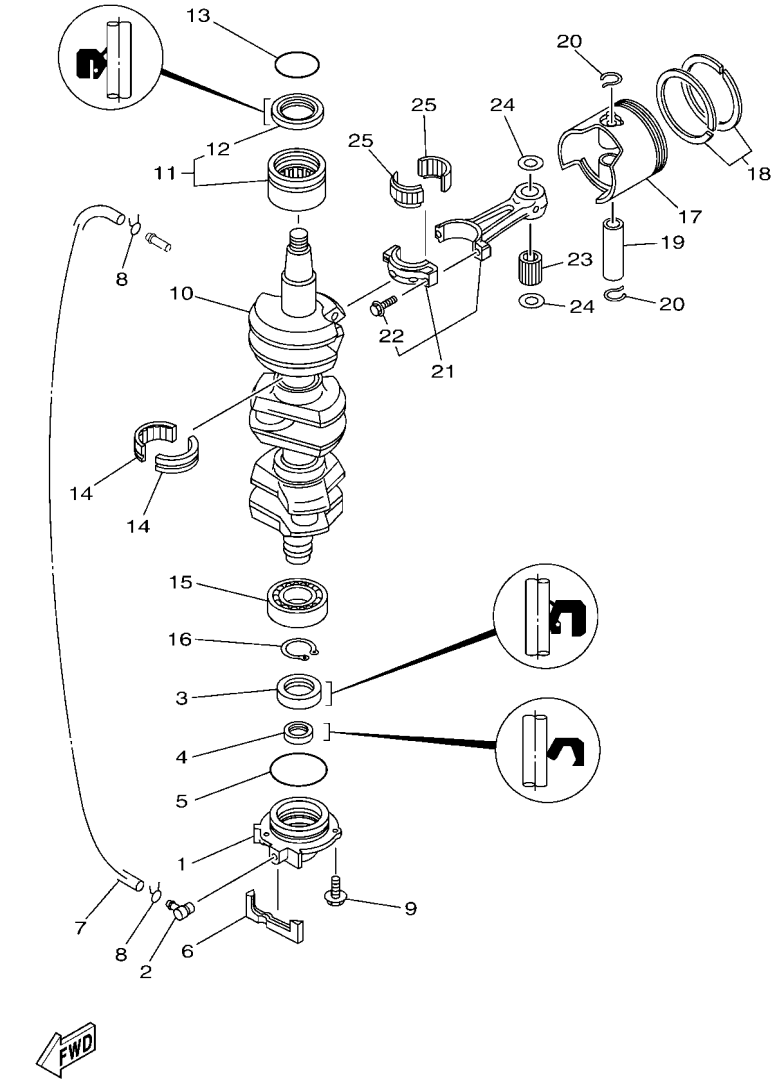

FIG. 4 CRANKSHAFT & PISTON — CIGUENAL & PISTON

REF. NO.	PART NO. CODIGO Nº	DESCRIPTION DESCRIPCION	MHD	ED	EHD			REMARKS OBSERVACIONES
24	90201–20417	WASHER, PLATE ARANDELA PLANA	6	6	6			
25	93310–730V8	BEARING COJINETE DE RODILLOS	3	3	3			

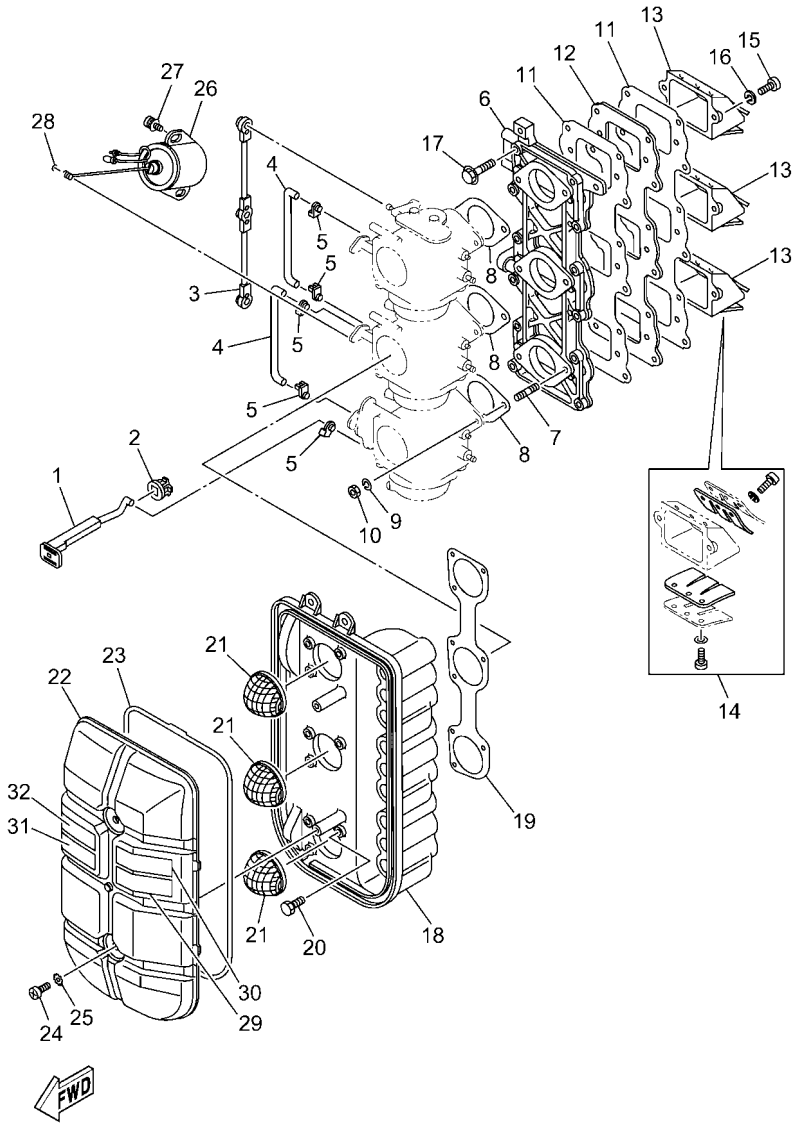

6GJB200-Y050

FIG. 5 INTAKE — ADMISION

REF. NO.	PART NO. CODIGO Nº	DESCRIPTION DESCRIPCION	MHD	ED	EHD			REMARKS OBSERVACIONES
1	692–41256–01	ROD, CHOKE 1 VARILLA DE AHOGADOR	1	1	1			
2	689–41273–00	GROMMET TAPON PROTECTOR	1	1	1			
3	688–41217–01	ROD, ACCEL. LEVER VARILLA PALANCA ACELERADOR	1	1	1			
4	688–41257–01	ROD, CHOKE 2 VARILLA DE AHOGADOR	2	2	2			
5	661–41262–02	JOINT, CHOKE LEVER CONECTOR DE AHOGADOR	5	5	5			
6	688–13641–01	MANIFOLD, INTAKE 1 CONECTOR DE ADMISSION 1	1	1	1			
7	90116–06122	BOLT, STUD ESPARRAGO	6	6	6			
8	688–14198–A2	GASKET EMPAQUE	3	3	3			
9	92995–06100	WASHER, SPRING ARANDELA	6	6	6			
10	95380–06600	NUT, HEXAGON TUERCA	6	6	6			
11	688–13621–A1	GASKET, VALVE SEAT JUNTA, DE VALV.DE EMPAQUE	2	2	2			
12	688–13624–00	PLATE,REED VALVE PLACA DE VALVULA DE LAMINAS	1	1	1			
13	688–13610–00	REED VALVE ASSY VALVULA DE LAMINAS COMPLETA	3	3	3			
14	688–W0004–00	.REED SET .JUEGO DE VALVULAS DE LENGUETA	1	1	1			
15	97880–05020	SCREW, PAN HEAD TORNILLO DE CABEZA CON PLANA	6	6	6			
16	92990–05100	WASHER, SPRING ARANDELA PLANA	6	6	6			
17	97513–06530	BOLT, WITH WASHER PERNO CON ARANDELA	12	12	12			
18	688–14417–01	COVER 1 CUBIERTA 1	1	1	1			
19	688–14483–A0	GASKET EMPAQUE	1	1	1			
20	97013–06018	BOLT PERNO	6	6	6			
21	688–14481–00	CAP, CARBURETOR TAPA DE CARBURADOR	3	3	3			
22	688–14418–10	COVER 2 CUBIERTA 2	1	1	1			
23	688–14416–01	GASKET, AIR CLEANER EMPAQUE	1	1	1			
24	97885–06016	SCREW, PAN HEAD TORNILLO A MUESCA	2	2	2			
25	90209–06M05	WASHER ARANDELA DE SEPARACION	2	2	2			
26	688–86110–01	SOLENOID SOLENOIDE		1				
27	90159–06M19	SCREW, WITH WASHER TORNILLO CON VALONA		2				

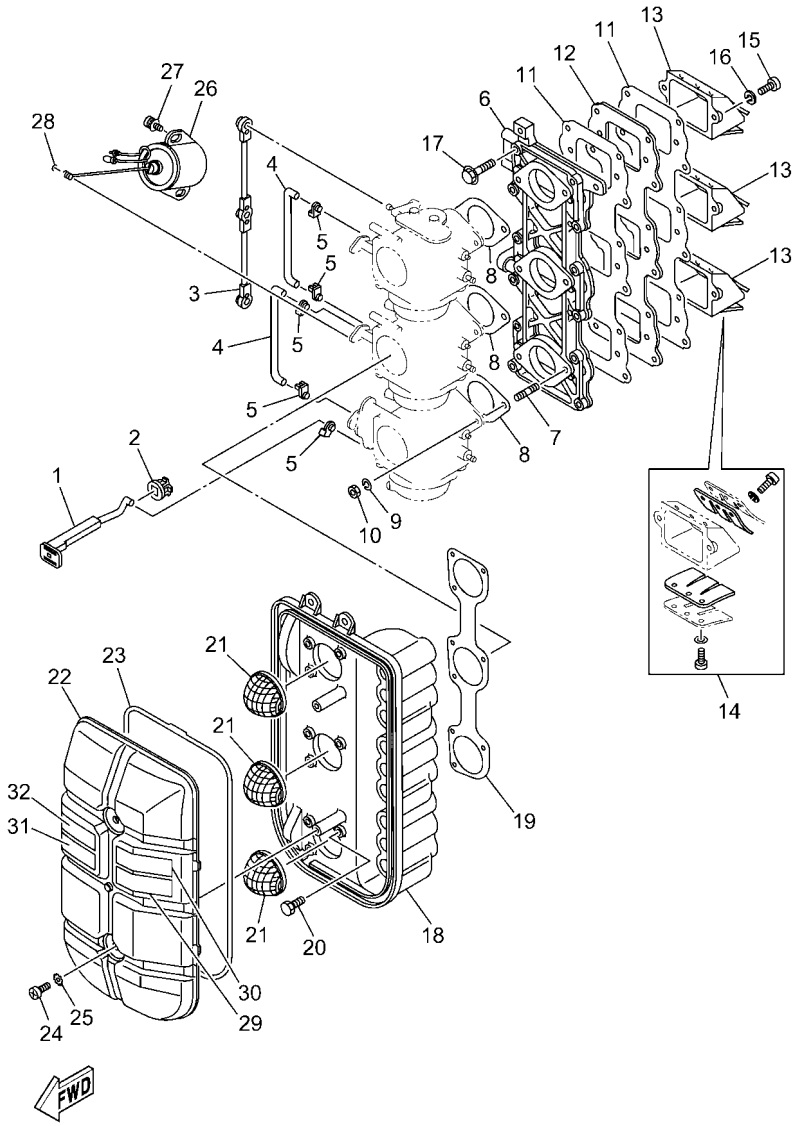

6GJB200-Y050

FIG. 5 INTAKE — ADMISION

REF. NO.	PART NO. CODIGO Nº	DESCRIPTION DESCRIPCION	MHD	ED	EHD			REMARKS OBSERVACIONES
28	93210–03261	O-RING ANILLO O		1				
29	6EE–81994–40	LABEL, SAFETY ETIQUETA DE SEGURIDAD	1	1	1			
30	6EE–81994–50	LABEL, SAFETY ETIQUETA DE SEGURIDAD	1					FOR AFR FOR AFR
31	6EE–81995–40	LABEL, WARNING ETIQUETA DE PRECAUCION	1	1	1			
32	6EE–81995–50	LABEL, WARNING ETIQUETA DE PRECAUCION	1					FOR AFR FOR AFR

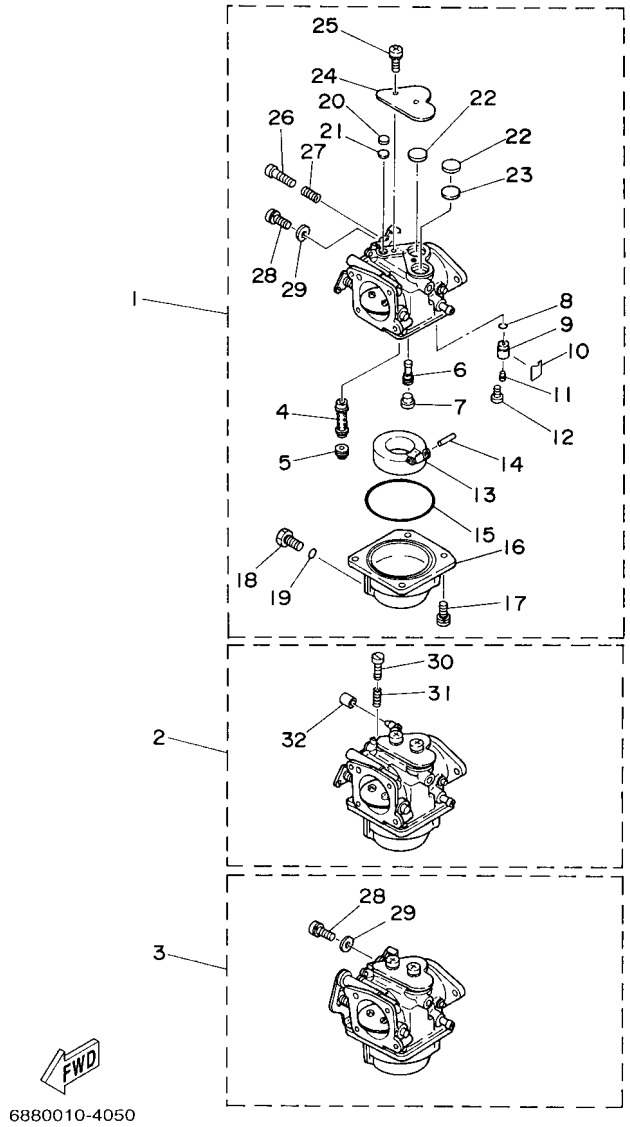

FIG. 6 CARBURETOR — CARBURADOR

REF. NO.	PART NO. CODIGO Nº	DESCRIPTION DESCRIPCION	MHD	ED	EHD			REMARKS OBSERVACIONES
1	692–14301–48	CARBURETOR ASSY 1 CARBURADOR COMPLETO 1	1	1	1			
2	692–14302–48	CARBURETOR ASSY 2 CARBURADOR COMPLETO 2	1	1	1			
3	692–14303–48	CARBURETOR ASSY 3 CARBURADOR COMPLETO 3	1	1	1			
4	692–14947–00	.JET, NEEDLE .INYECTOR DE AGUJA	3	3	3			
5	676–14943–41	.JET, MAIN (#170) .INYECTOR PRINCIPAL (#170)	3	3	3			
6	676–14948–18	.JET (#78) .INYECTOR (#78)	3	3	3			
7	679–14966–00	.RUBBER CAP .TAPA	3	3	3			
8	93210–04228	.O-RING .ANILLO O	3	3	3			
9	692–14590–02	.NEEDLE VALVE ASSY .VALVULA DE AGUJA COMPLETA	3	3	3			
10	633–14159–00	.CLIP .PRESILLA	3	3	3			
11	676–14186–00	.PIN, FLOAT .PASADOR DE LA BOYA	3	3	3			
12	98580–04008	.SCREW, PAN HEAD .TORNILLO DE CABEZA CRUZADA	3	3	3			
13	676–14985–01	.FLOAT .BOIA	3	3	3			
14	688–14548–00	.PIN, FLOAT ARM .PASADOR DE BRAZO DE BOIA	3	3	3			
15	676–14984–00	.GASKET, FLOAT CHAMBER .EMPAQUE CAMARA DE BOIA	3	3	3			
16	688–14980–00	.BODY, FLOAT CHAMBER .CUERPO CAMARA DE BOIA	3	3	3			
17	97980–04114	.SCREW, WITH WASHER .TORNILLO, CON ARANDELA	12	12	12			
18	6H3–14992–01	.SCREW, DRAIN .TORNILLO,SEGURO	3	3	3			
19	93210–04230	.O-RING .ANILLO O	3	3	3			
20	663–14126–00	.GASKET .EMPAQUE	3	3	3			
21	663–14527–00	.PLATE .PLACA	3	3	3			
22	688–14126–00	.GASKET .EMPAQUE	6	6	6			
23	688–14527–00	.PLATE .PLACA	3	3	3			
24	688–14572–01	.PLATE, STAY .PLACA DE SOPORTE	3	3	3			
25	97980–05310	.SCREW, WITH WASHER .TORNILLO, CON ARANDELA	6	6	6			
26	692–14923–00	.SCREW, PILOT .TORNILLO DE AJUSTE	3	3	3			
27	697–14555–00	.SPRING .RESORTE	3	3	3			

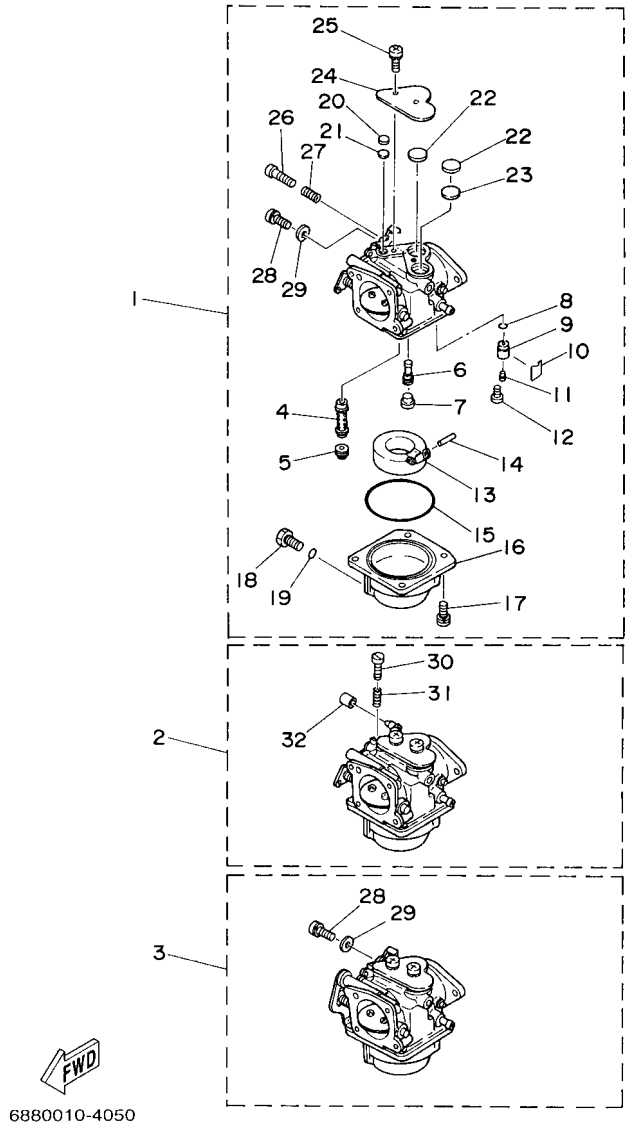

FIG. 6 CARBURETOR CARBURADOR

REF. NO.	PART NO. CODIGO Nº	DESCRIPTION DESCRIPCION	MHD	ED	EHD			REMARKS OBSERVACIONES
28	6K5–14592–00	.SCREW .TORNILLO	2	2	2			#1,3 #1,3
29	90201–05552	.WASHER, PLATE .ARANDELA PLANA	2	2	2			#1,3 #1,3
30	63V–14523–00	.SCREW, STOP .TORNILLO DE TOPE	1	1	1			#2 #2
31	90501–10326	.SPRING, COMPRESSION .RESORTE DE COMPRESION	1	1	1			#2 #2
32	6H2–14578–00	.COLLAR .COLLAR	1	1	1			#2 #2

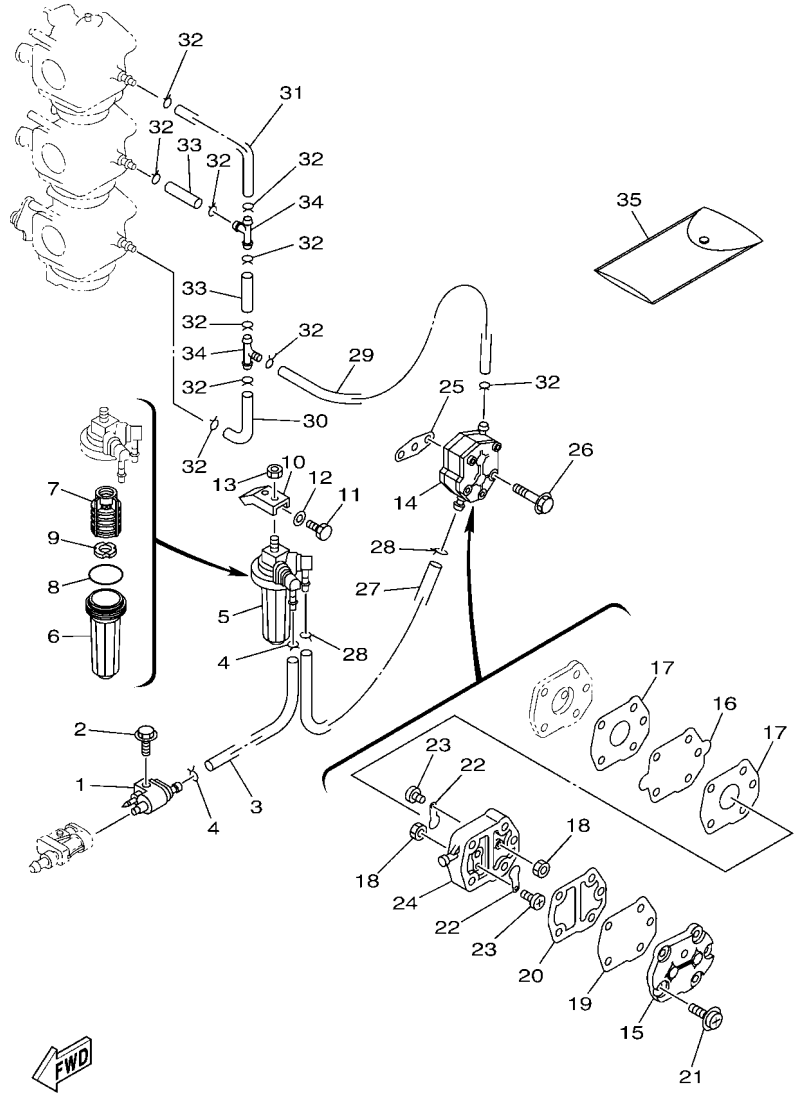

FIG. 7 FUEL — COMBUSTIBLE

REF. NO.	PART NO. CODIGO Nº	DESCRIPTION DESCRIPCION	MHD	ED	EHD			REMARKS OBSERVACIONES
1	6G1–24304–10	FUEL PIPE JOINT COMP. 1 CONECTOR MANGUERA COMBUST.1	1	1	1			
2	97E95–06525	BOLT, HEXAGON W/W DEEP RECESS TORNILLO HEXAGONAL CON RONDONA	1	1	1			
3	90445–09090	HOSE (L185) TUBO (L185)	1	1	1			
4	90467–08004	CLIP PRESILLA	2	2	2			
5	64J–24560–00	FILTER ASSY FILTRO COMPLETO	1	1	1			
6	68V–24521–01	.CUP, FILTER .COPA DE FILTRO	1	1	1			
7	61N–24563–00	.ELEMENT, FILTER .ELEMENTO DEL FILTRO	1	1	1			
8	93210–32738	.O-RING .ANILLO O	1	1	1			
9	68V–24469–01	.FLOAT, WATER LEVEL .BOIA	1	1	1			
10	648–24566–02	BRACKET, FILTER SOPORTE DEL FILTRO	1	1	1			
11	97013–06014	BOLT PERNO	1	1	1			
12	92903–06600	WASHER, PLATE RONDANA SENCILLA	1	1	1			
13	95380–08600	NUT TUERCA	1	1	1			
14	692–24410–01	FUEL PUMP ASSY BOMBA DE COMBUSTIBLE COMPLETA	1	1	1			
15	6A0–24413–00	.BODY 2 .CUERPO 2	1	1	1			
16	692–24411–00	.DIAPHRAGM .DIAFRAGMA	1	1	1			
17	648–24434–01	.GASKET, BODY .EMPAQUE	2	2	2			
18	95380–03600	.NUT .TUERCA	2	2	2			
19	663–24411–00	.DIAPHRAGM .DIAFRAGMA	1	1	1			
20	648–24435–03	.GASKET, BODY 2 .EMPAQUE	1	1	1			
21	97980–05128	.SCREW, WITH WASHER .TORNILLO, CON ARANDELA	3	3	3			
22	6A0–24421–01	.VALVE, CHECK .VALVULA DE RETENCION	2	2	2			
23	6A0–14325–00	.SCREW, PAN HEAD .TORNILLO CABEZA REDONDA	2	2	2			
24	6A0–24412–02	.BODY 1 .CUERPO 1	1	1	1			
25	650–24431–A0	GASKET, FUEL PUMP 1 EMPAQUE BOMBA COMBUST 1	1	1	1			
26	97E95–06540	BOLT, HEXAGON W/W DEEP RECESS TORNILLO HEXAGONAL CON RONDONA	2	2	2			
27	90445–09097	HOSE (L250) TUBO (L250)	1	1	1			

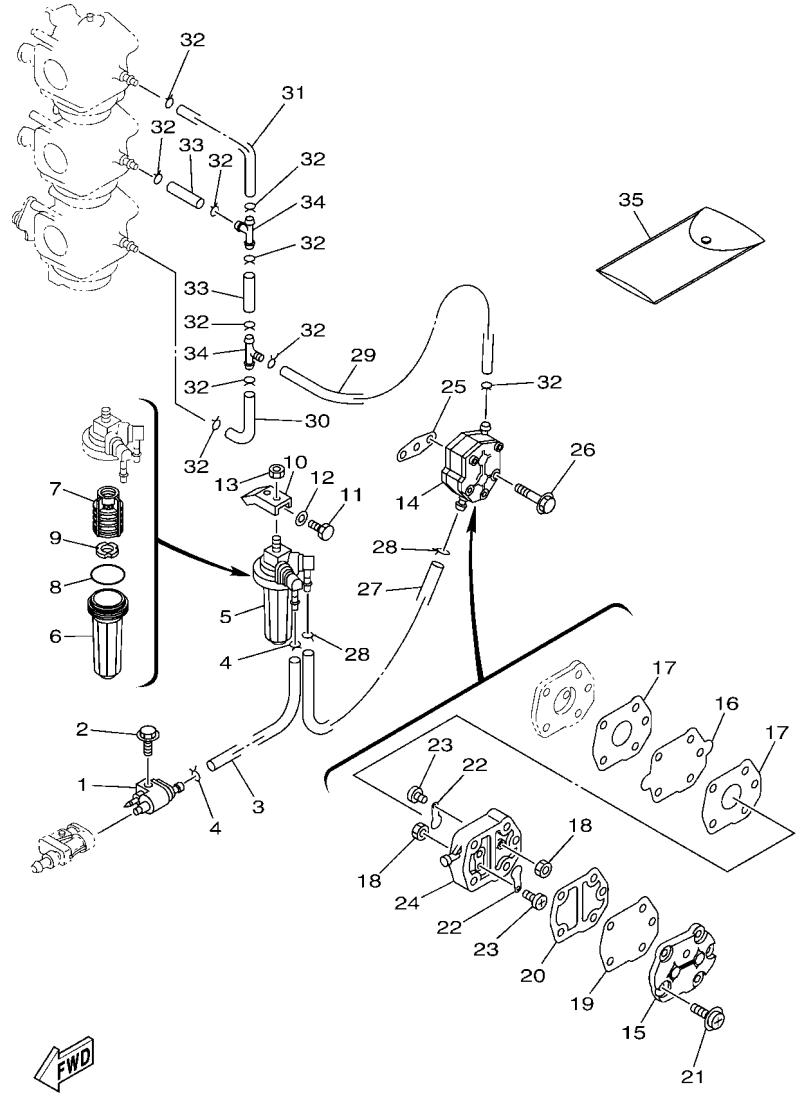

FIG. 7 FUEL — COMBUSTIBLE

REF. NO.	PART NO. CODIGO Nº	DESCRIPTION DESCRIPCION	MHD	ED	EHD			REMARKS OBSERVACIONES
28	90467–08004	CLIP PRESILLA	2	2	2			
29	90445–09097	HOSE (L250) TUBO (L250)	1	1	1			
30	688–24313–00	PIPE 3 TUBO 3	1	1	1			
31	688–24314–00	PIPE 4 TUBO 4	1	1	1			
32	90467–08004	CLIP PRESILLA	10	10	10			
33	90445–09220	HOSE (L30) TUBO (L30)	2	2	2			
34	688–24378–00	PIPE, JOINT 3 TUBO DE UNION 3	2	2	2			
35	656–W2810–03	TOOL KIT JUEGO DE HERRAMIENTAS	1	1	1			

FIG. 8 STARTER ARRANQUE

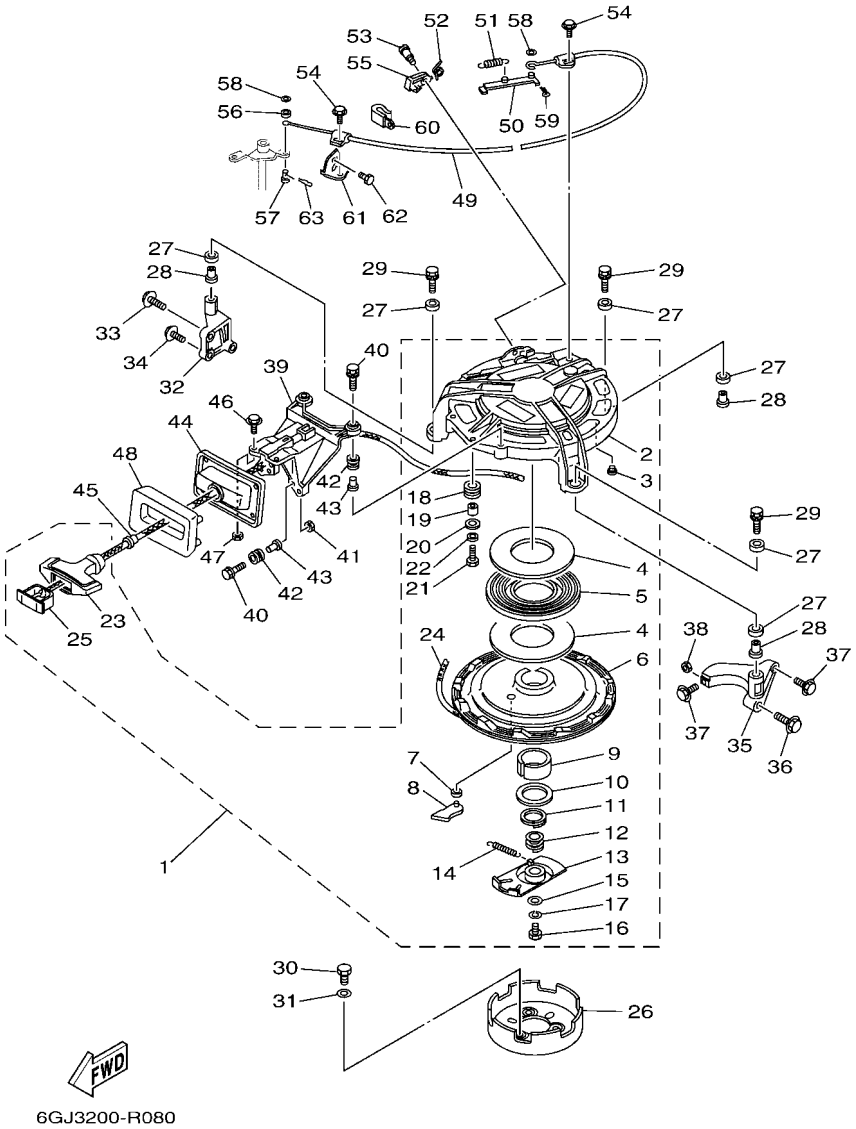

*1:CUT FROM 50M ROLLS,PART NO.90890-44374,CUTTING LENGTH 2.2M

*1:CORTE DE UN RODILLO DE 50M , PARTS NUMERO 90890-44374, LARGO DEL CORTE 2.2M

REF. NO.	PART NO. CODIGO Nº	DESCRIPTION DESCRIPCION	MHD	ED	EHD			REMARKS OBSERVACIONES
1	692–W1571–04	STARTER ASSY ARRANQUE COMPLETO	1					
2	692–15711–01	.CASE, STARTER .CAJA DE ARRANQUE	1					
3	648–15773–00	.STAY 3 .SOPORTE 3	5					
4	663–15739–00	.WASHER, THRUST .ARANDELA DE EMPUJE AXIAL	2					
5	663–15713–00	.SPRING, STARTER .RESORTE DE ARRANQUE	1					
6	663–15714–02	.DRUM, SHEAVE .TAMBOR ROLDANA	1					
7	663–15764–00	.COLLAR 1 .COLLAR 1	1					
8	663–15741–02	.PAWL, DRIVE .TRINQUETE DE TRACCION	1					
9	663–15754–00	.BUSH 2 .BUJE 2	1					
10	663–15726–01	.WASHER, FLAT .ARANDELA PLANA	1					
11	663–15744–00	.CIRCLIP .SEGURO	1					
12	663–15715–00	.SPRING, FRICTION .RESORTE PLACA DE TRACCION	1					
13	696–15716–00	.PLATE, DRIVE .PLACA DE TRACCION	1					
14	696–15734–00	.SPRING, RETURN .RESORTE DE RETORNO	1					
15	663–15719–00	.WASHER, THRUST .ARANDELA DE EMPUJE	1					
16	97095–06016	.BOLT .PERNO	1					
17	92995–06100	.WASHER, SPRING .ARANDELA	1					
18	663–15752–00	.ROLLER, WIRE .RODILLO DE CUERDA	1					
19	6F5–15753–00	.BUSH .BUJE	1					
20	6F5–15791–00	.WASHER, LOCK .EMBLEMA	1					
21	97017–06025	.BOLT .PERNO	1					
22	92995–06100	.WASHER, SPRING .ARANDELA	1					
23	689–15755–02	.HANDLE, STARTER .MANIJA DE ARRANQUE	1					
24	*	.WIRE (L:2200MM) .CABLE (L:2200MM)	1					*1 *1
25	6F5–15779–02	.COVER .CUBIERTA	1					
26	6K5–15723–00	PULLEY, STARTER POLEA DE ARRANQUE	1					
27	90385–12M04	BUSH BUJE	6					

FIG. 8 STARTER ARRANQUE

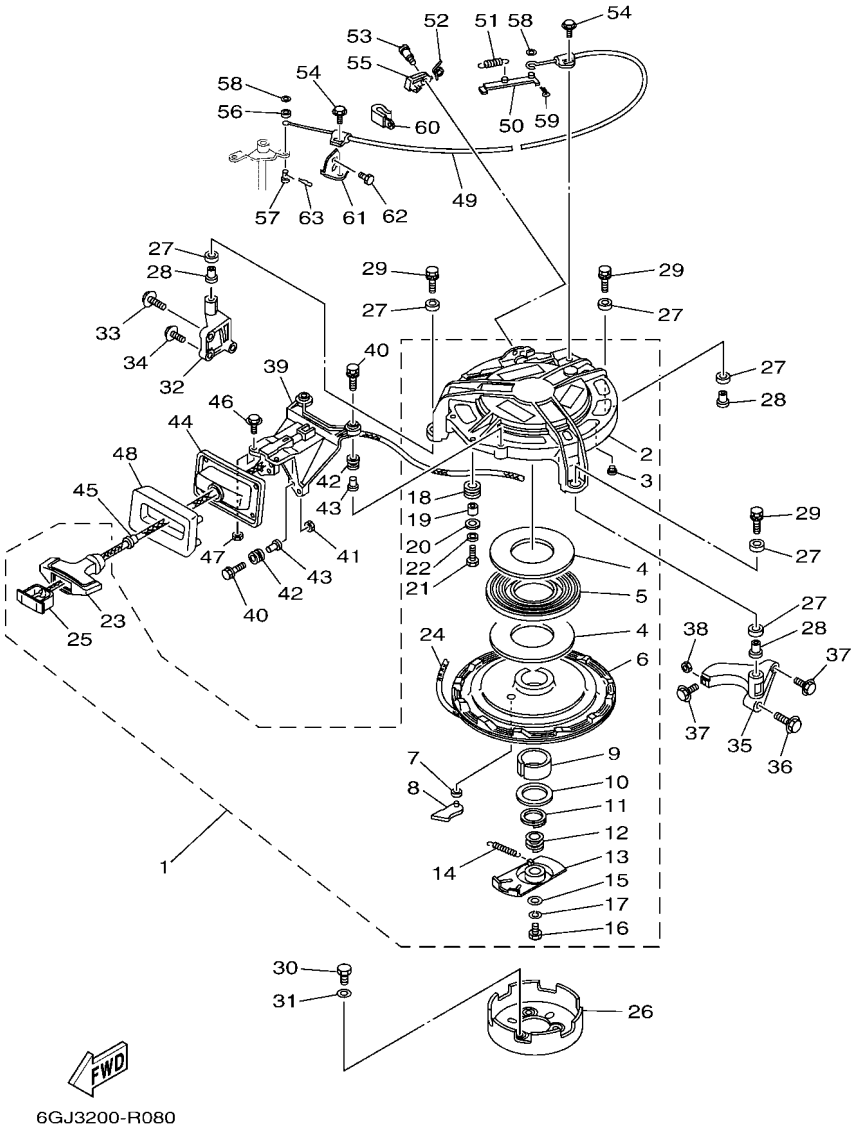

*1:CUT FROM 50M ROLLS,PART NO.90890-44374,CUTTING LENGTH 2.2M

*1:CORTE DE UN RODILLO DE 50M , PARTS NUMERO 90890-44374, LARGO DEL CORTE 2.2M

REF. NO.	PART NO. CODIGO Nº	DESCRIPTION DESCRIPCION	MHD	ED	EHD			REMARKS OBSERVACIONES
28	90387–08M05	COLLAR ESPACIADOR	3					
29	90119–08188	BOLT, WITH WASHER TORNILLO CON ARANDELA	3					
30	97013–08016	BOLT PERNO	3					
31	92903–08600	WASHER, PLATE RONDANA SENCILLA	3					
32	692–15771–00	STAY 1 SOPORTE 1	1					
33	97513–06535	BOLT, WITH WASHER PERNO CON ARANDELA	1					
34	97513–06525	BOLT, WITH WASHER PERNO CON ARANDELA	2					
35	692–15772–00	STAY 2 SOPORTE 2	1					
36	97513–08540	BOLT, WITH WASHER PERNO CON ARANDELA	1					
37	97513–06530	BOLT, WITH WASHER PERNO CON ARANDELA	2					
38	95303–06600	NUT TUERCA	1					
39	697–15787–00	STAY APOYO	1					
40	90119–06292	BOLT, WITH WASHER TORNILLO CON ARANDELA	4					
41	95303–06600	NUT TUERCA	2					
42	6A0–82317–01	DAMPER, IGNITION COIL AMORTIGUADOR BOBINA ENCENDIDO	4					
43	90387–06119	COLLAR ESPACIADOR	4					
44	692–15758–01–8D	GUIDE, WIRE GUIA DE CABLE	1					
45	697–15789–01	DAMPER AMORTIGUADOR	1					
46	97E95–06620	BOLT, HEXAGON W/W DEEP RECESS TORNILLO HEXAGONAL CON RONDONA	2					
47	95303–06600	NUT TUERCA	2					
48	697–15762–00	SEAL, RUBBER 2 SELLO DE GOMA 2	1					
49	692–15770–01	CABLE COMP., STARTER STOP CABLECOMPL DE SEGURO ARRANQUE	1					
50	663–15735–01	GUIDE, CAM GUIA DE LEVA	1					
51	90506–08M23	SPRING, TENSION RESORTE DE TENSION	1					
52	90508–12015	SPRING, TORSION RESORTE DE TORSION	1					
53	90149–05095	SCREW TORNILLO DE REGLAJE	1					
54	97E95–06512	BOLT, HEXAGON W/W DEEP RECESS TORNILLO HEXAGONAL CON RONDONA	2					

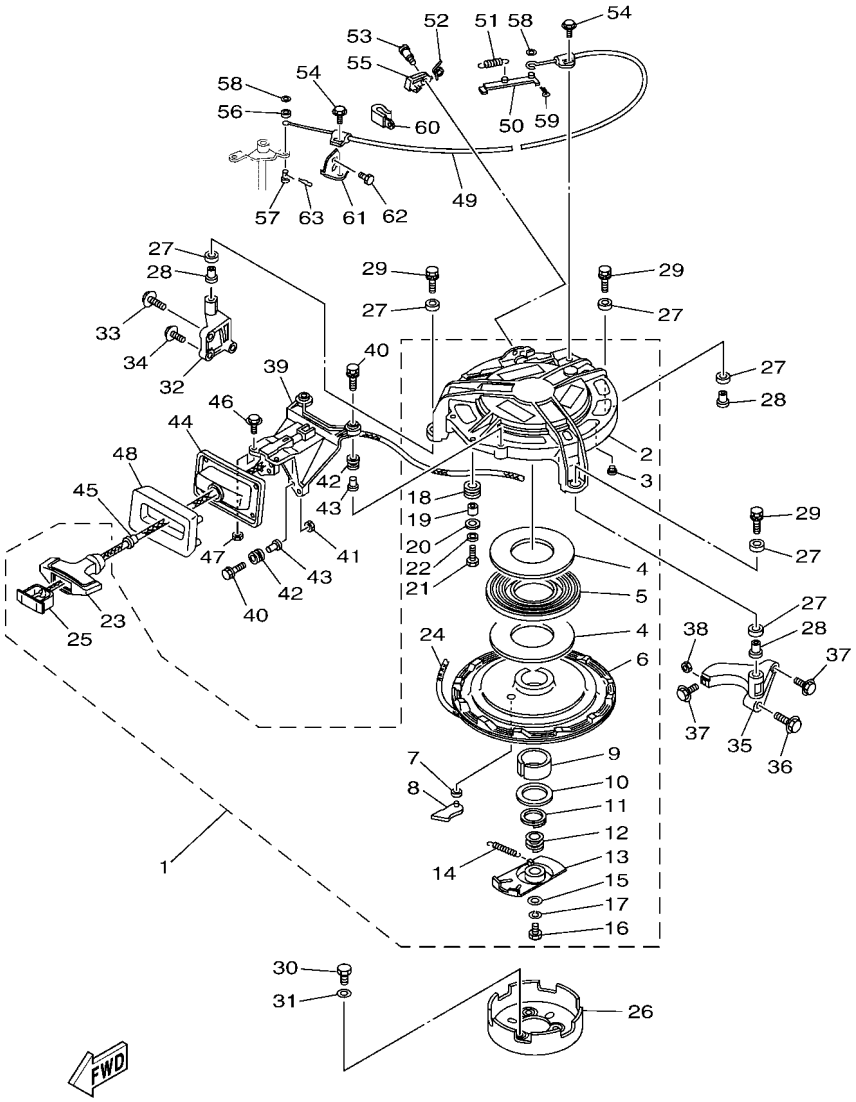

6GJ3200-R080

*1:CUT FROM 50M ROLLS,PART NO.90890-44374,CUTTING LENGTH 2.2M

*1:CORTE DE UN RODILLO DE 50M , PARTS NUMERO 90890-44374, LARGO DEL CORTE 2.2M

FIG. 8 STARTER ARRANQUE

REF. NO.	PART NO. CODIGO Nº	DESCRIPTION DESCRIPCION	MHD	ED	EHD			REMARKS OBSERVACIONES
55	663–15794–00	STOPPER TOPE	1					
56	663–15736–01	RING, RETAINING 1 ANILLO DE RETEN	1					
57	90240–06M18	PIN, CLEVIS PASADOR CON HOYO	1					
58	92990–06200	WASHER, PLAIN ARANDELA PLANA	2					
59	91490–16012	PIN. COTTER CHAVETA	1					
60	90465–06M90	CLAMP BRIDA	1					
61	663–15772–01	STAY 2 SOPORTE 2	1					
62	97013–08012	BOLT PERNO	1					
63	90468–18008	CLIP PRESILLA	1					

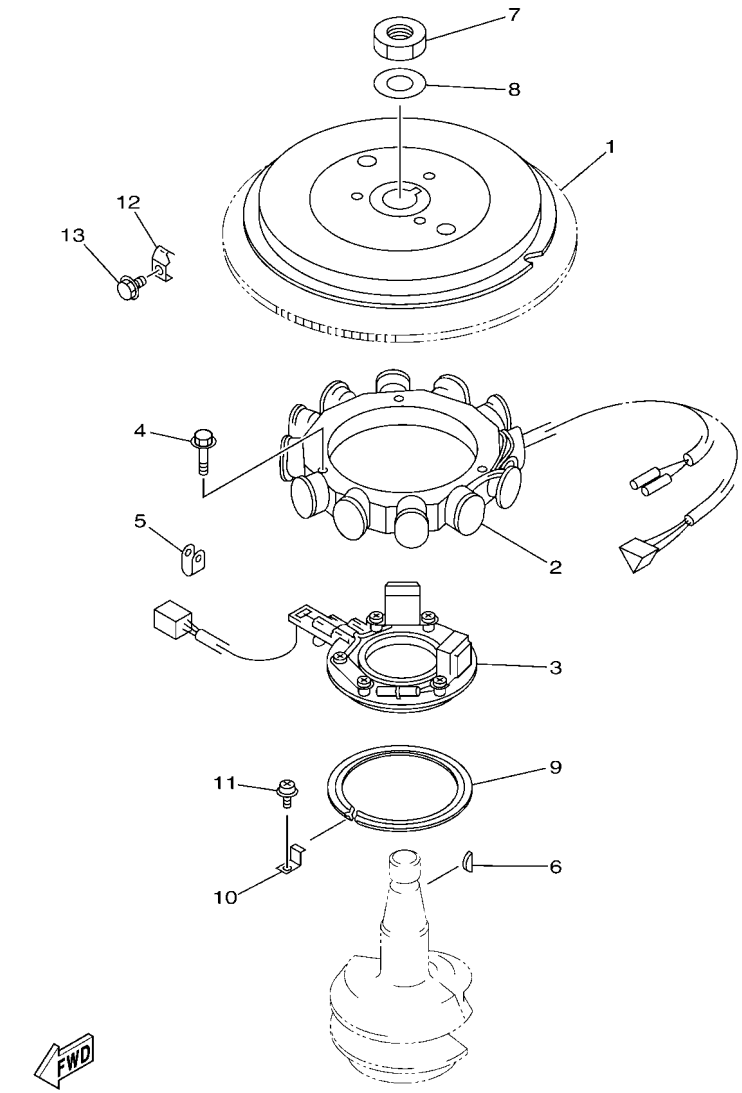

FIG. 9 GENERATOR GENERADOR

REF. NO.	PART NO. CODIGO Nº	DESCRIPTION DESCRIPCION	MHD	ED	EHD			REMARKS OBSERVACIONES
1	692–85550–00	ROTOR ASSY ROTOR COMPLETO	1					
	688–85550–00	ROTOR ASSY ROTOR COMPLETO		1	1			
2	688–85510–01	STATOR ASSY ESTATOR COMPLETO	1	1	1			
3	688–85580–00	COIL, PULSER BOBINA DE PULSACION	1	1	1			
4	97513–06530	BOLT, WITH WASHER PERNO CON ARANDELA	3	3	3			
5	90464–12M00	CLAMP BRIDA	1	1	1			
6	90280–05015	KEY, WOODRUFF CUNA WOODRUFF	1	1	1			
7	90170–20137	NUT TUERCA	1	1	1			
8	90201–21M18	WASHER, PLATE ARANDELA PLANA	1	1	1			
9	688–41611–00	RETAINER, MAGNETO BASE RETENEDOR BASE MAGNETO	1	1	1			
10	688–41612–00	RETAINER, MAGNETO BASE RETENEDOR BASE MAGNETO	3	3	3			
11	90159–06M31	SCREW, WITH WASHER TORNILLO CON VALONA	3	3	3			
12	688–81332–01	PLATE, TIMING PLACA REGULADOR DE TIEMPO	1	1	1			
13	97E95–06510	BOLT, HEXAGON W/W DEEP RECESS TORNILLO HEXAGONAL CON RONDONA	1	1	1			

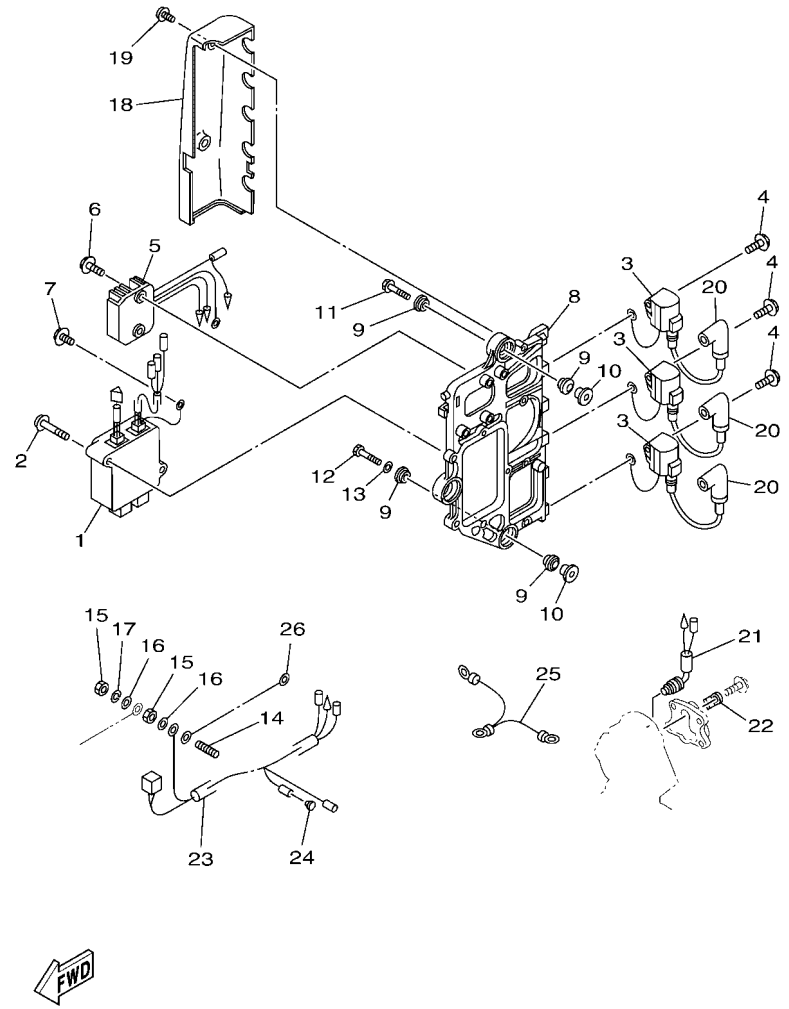

6GJ6200-U100

FIG. 10 ELECTRICAL 1 — EQUIPO ELECTRICO 1

REF. NO.	PART NO. CODIGO Nº	DESCRIPTION DESCRIPCION	MHD	ED	EHD			REMARKS OBSERVACIONES
1	688–85540–00	C.D.I. UNIT ASSY UNIDAD C.D.I. COMPLETA	1					
2	97980–06340	SCREW, WITH WASHER TORNILLO, CON ARANDELA	2					
3	697–85570–00	IGNITION COIL ASSY BOBINA DE IGNICION COMPLETO	3					
4	97E95–06520	BOLT, HEXAGON W/W DEEP RECESS TORNILLO HEXAGONAL CON RONDONA	3					
5	6H0–81960–00	RECTIFIER & REGULATOR ASSY RECTIFICADOR Y REGULADOR	1					
6	97E95–06520	BOLT, HEXAGON W/W DEEP RECESS TORNILLO HEXAGONAL CON RONDONA	2					
7	97513–06516	BOLT, WITH WASHER PERNO CON ARANDELA	1					
8	688–85542–10	BRACKET SOPORTE	1					
9	90480–09M25	GROMMET TAPON	6					
10	90387–06M03	COLLAR ESPACIADOR	3					
11	90119–06M75	BOLT, WITH WASHER TORNILLO CON ARANDELA	2					
12	90109–06M39	BOLT PERNO	1					
13	90201–06M31	WASHER, PLATE ARANDELA PLANA	1					
14	90116–06M22	BOLT, STUD ESPARRAGO	1					
15	95380–06700	NUT TUERCA	2					
16	92990–06200	WASHER, PLAIN ARANDELA PLANA	2					
17	92990–06100	WASHER, SPRING ARANDELA PLANA	1					
18	6H1–81916–00	COVER, TERMINAL CUBIERTA DE TERMINAL	1					
19	90159–06M11	SCREW, WITH WASHER TORNILLO CON VALONA	2					
20	663–82370–01	PLUG CAP ASSY TAPON DE BUJIA COMPLT	3					
	6G1–82370–21	PLUG CAP ASSY TAPON DE BUJIA COMPLT	3					FOR CAR FOR CAR
21	688–82560–10	THERMO SWITCH ASSY INTER. DE TERMO	1					
22	688–82588–01	PLATE PLACA	1					
23	6GJ–82590–00	WIRE HARNESS ASSY CONJUNTO DE CABLES	1					
24	703–82119–01	COVER, LEAD WIRE CUBIERTA DE CABLE CONDUCTOR	1					
25	697–82519–00	WIRE, EARTH LEAD CABLE CONDUCTOR A TIERRA	1					
26	61A–82519–00	WIRE, EARTH LEAD CABLE CONDUCTOR A TIERRA	1					

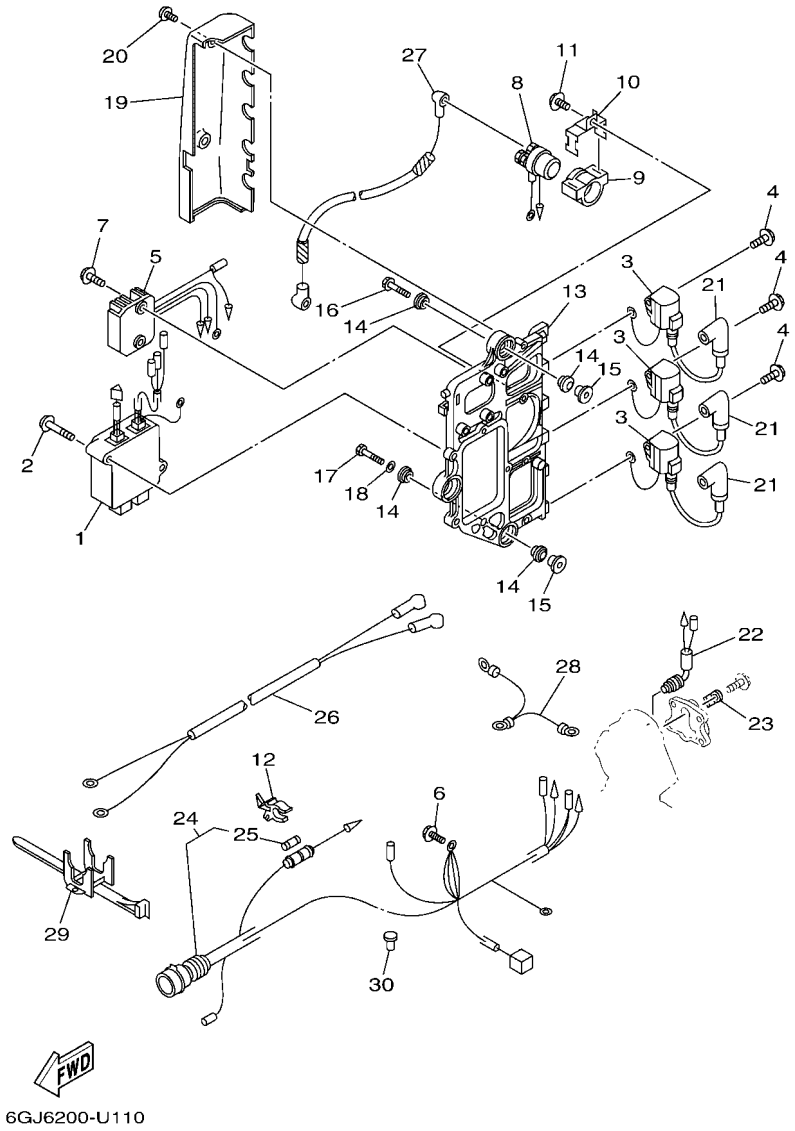

FIG. 11 ELECTRICAL 2 — EQUIPO ELECTRICO 2

REF. NO.	PART NO. CODIGO Nº	DESCRIPTION DESCRIPCION	MHD	ED	EHD			REMARKS OBSERVACIONES
1	688–85540–00	C.D.I. UNIT ASSY UNIDAD C.D.I. COMPLETA		1	1			
2	97980–06340	SCREW, WITH WASHER TORNILLO, CON ARANDELA		2	2			
3	697–85570–00	IGNITION COIL ASSY BOBINA DE IGNICION COMPLETO		3	3			
4	97E95–06520	BOLT, HEXAGON W/W DEEP RECESS TORNILLO HEXAGONAL CON RONDONA		3	3			
5	6H0–81960–00	RECTIFIER & REGULATOR ASSY RECTIFICADOR Y REGULADOR		1	1			
6	97E95–06512	BOLT, HEXAGON W/W DEEP RECESS TORNILLO HEXAGONAL CON RONDONA		1	1			
7	97E95–06520	BOLT, HEXAGON W/W DEEP RECESS TORNILLO HEXAGONAL CON RONDONA		2	2			
8	6G1–81941–10	STARTER RELAY ASSY RELE DE ARRANQUE		1	1			
9	6G1–81952–01	HOLDER, RELAY SOSTEN DE RELE		1	1			
10	6E9–81945–70	PLATE, SWITCH FITTING PLACA ACCESORIA DE INTERRUP.		1	1			
11	97513–06516	BOLT, WITH WASHER PERNO CON ARANDELA		1	1			
12	6G5–82152–00	HOLDER, FUSE PORTA-FUSIBLES		1	1			
13	688–85542–10	BRACKET SOPORTE		1	1			
14	90480–09M25	GROMMET TAPON		6	6			
15	90387–06M03	COLLAR ESPACIADOR		3	3			
16	90119–06M75	BOLT, WITH WASHER TORNILLO CON ARANDELA		2	2			
17	90109–06M39	BOLT PERNO		1	1			
18	90201–06M31	WASHER, PLATE ARANDELA PLANA		1	1			
19	6H1–81916–00	COVER, TERMINAL CUBIERTA DE TERMINAL		1	1			
20	90159–06M11	SCREW, WITH WASHER TORNILLO CON VALONA		2	2			
21	663–82370–01	PLUG CAP ASSY TAPON DE BUJIA COMPLT		3	3			
22	688–82560–10	THERMO SWITCH ASSY INTER. DE TERMO		1	1			
23	688–82588–01	PLATE PLACA		1	1			
24	688–82590–42	WIRE HARNESS ASSY (7P) CONJUNTO DE CABLES (7P)		1				
	688–82590–52	WIRE HARNESS ASSY (10P) CONJUNTO DE CABLES (10P)			1			
25	663–82151–01	.FUSE (12V-20A) .FUSIBLE (12V-20A)		1	1			
26	6H0–82105–04	BATTERY CABLE CABLE DE BATERIA		1	1			

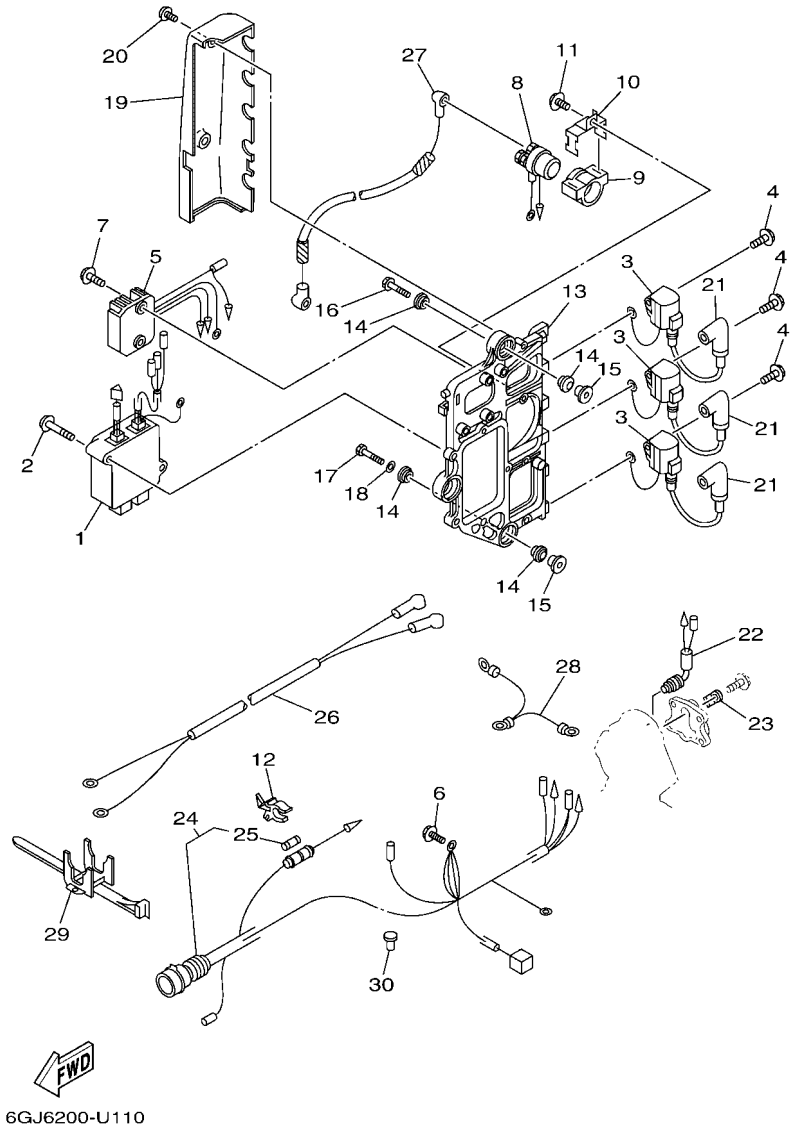

FIG. 11 ELECTRICAL 2 — EQUIPO ELECTRICO 2

REF. NO.	PART NO. CODIGO Nº	DESCRIPTION DESCRIPCION	MHD	ED	EHD			REMARKS OBSERVACIONES
27	6H0–82117–01	WIRE, LEAD CABLE CONDUCTOR		1	1			
28	697–82519–00	WIRE, EARTH LEAD CABLE CONDUCTOR A TIERRA		1	1			
29	688–82594–00	CLAMP GRAMPA		1	1			
30	703–82119–01	COVER, LEAD WIRE CUBIERTA DE CABLE CONDUCTOR			1			

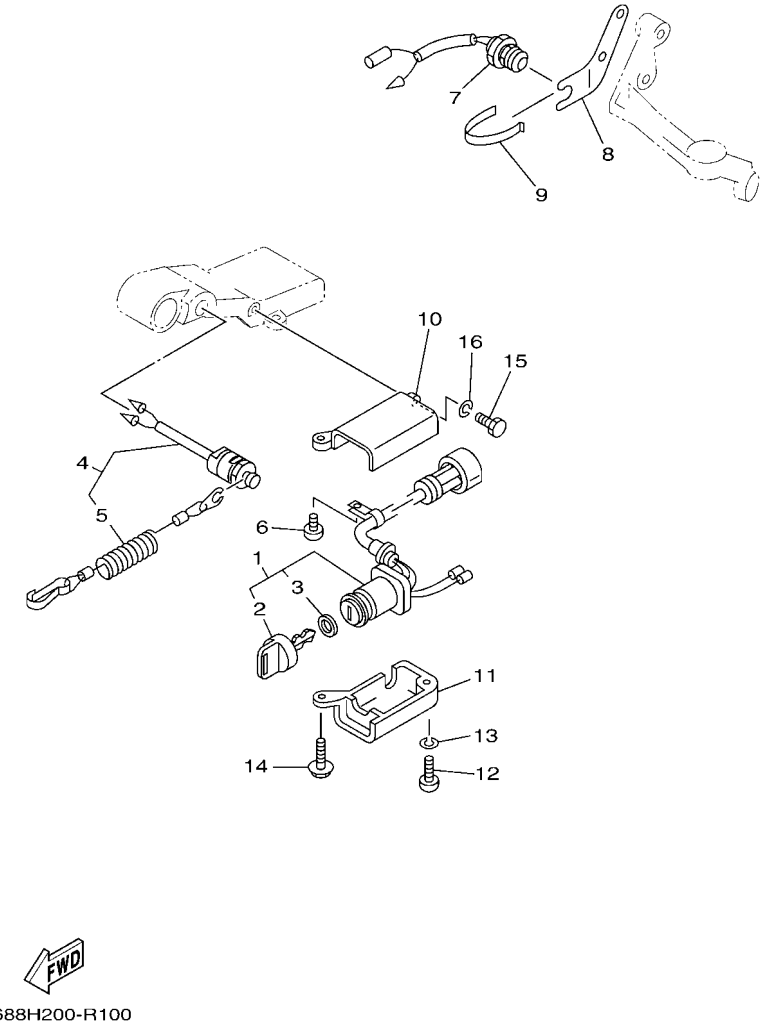

688H200-R100

FIG. 12 ELECTRICAL 3 — EQUIPO ELECTRICO 3

REF. NO.	PART NO. CODIGO Nº	DESCRIPTION DESCRIPCION	MHD	ED	EHD			REMARKS OBSERVACIONES
1	6H3–82510–22	MAIN SWITCH ASSY CONJUNTO DE LLAVE IGNICION			1			
2	676–82577–01	.CAP, KEY .TAPA			1			
3	703–82532–00	.CAP .TAPA			1			
4	688–82575–12	ENGINE STOP SWITCH ASSY INTERRUPTOR DE PARADA COMPL			1			
5	682–82556–00	.LANYARD, STOP SWITCH .CORDON DE INTERRUPTOR PARADA			1			
6	97885–06012	SCREW, PAN HEAD TORNILLO A MUESCA			1			
7	688–82540–12	NEUTRAL SWITCH ASSY INTERRUPTOR NEUTRAL COMPL			1			
8	663–82554–01	STAY, NEUTRAL SWITCH SOPORTE INTERRUPTOR DE NEUTRAL			1			
9	663–82555–01	DAMPER, MAIN SWITCH 1 AMORT.DE INTER.PPAL.1			1			
10	697–8252E–02–8D	COVER, MAIN SWITCH 1 CUBIELA INTERRUPTOR PRINC.1			1			
11	697–8252F–02–8D	COVER, MAIN SWITCH 2 CUBIELA INTERRUPTOR PRINC.2			1			
12	97880–06025	SCREW, PAN HEAD TORNILLO DE CABEZA CON PLANA			1			
13	92990–06100	WASHER, SPRING ARANDELA PLANA			1			
14	97513–06530	BOLT, WITH WASHER PERNO CON ARANDELA			1			
15	97013–06020	BOLT PERNO			1			
16	92903–06100	WASHER, SPRING RONDANA SENCILLA			1			

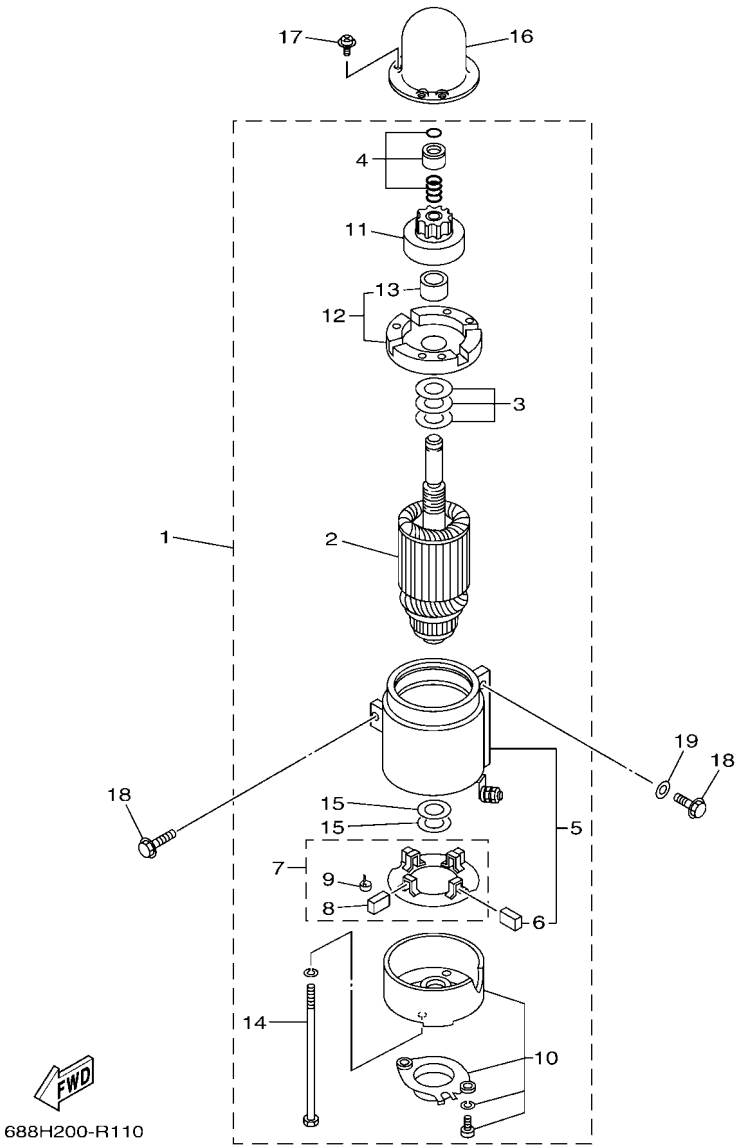

FIG. 13 STARTING MOTOR — MOTOR DE ARRANQUE

REF. NO.	PART NO. CODIGO Nº	DESCRIPTION DESCRIPCION	MHD	ED	EHD			REMARKS OBSERVACIONES
1	688–81800–13	STARTING MOTOR ASSY MOTOR DE ARRANQUE COMPLETO		1	1			
2	676–81850–11	.ARMATURE ASSY .INDUCIDO COMPLETO		1	1			
3	676–81809–10	.WASHER KIT .JUEGO DE ARANDELA		1	1			
4	676–81857–10	.PINION STOPPER SET .JUEGO TAPON PINON		1	1			
5	688–81810–11	.STATOR ASSY .ESTATOR COMPLETO		1	1			
6	663–81811–11	..BRUSH 1 ..ESCOBILLA 1		2	2			
7	663–81840–11	.BRUSH HOLDER ASSY .SOSTEN DE ESCOBILLA COMPLETO		1	1			
8	663–81812–11	..BRUSH 2 ..ESCOBILLA 2		2	2			
9	663–81813–10	..SPRING, BRUSH ..RESORTE DE ESCOBILLA		4	4			
10	663–81820–12	.REAR BRACKET ASSY .CUBIERTA TRASERA COMPL		1	1			
11	663–81832–12	.PINION ASSY .PINON COMPL.		1	1			
12	688–81830–11	.FRONT BRACKET ASSY .SOPORTE DELANTERO COMPLETO		1	1			
13	688–81831–00	..METAL, FRONT ..METAL, DELANTERO		1	1			
14	663–81826–10	.BOLT .PERNO		2	2			
15	688–81824–00	.WASHER 2 .ARANDELA 2		2	2			
16	688–81842–00	COVER TAPA		1	1			
17	97980–04210	SCREW, WITH WASHER TORNILLO, CON ARANDELA		3	3			
18	97513–08530	BOLT, WITH WASHER PERNO CON ARANDELA		3	3			
19	92990–08600	WASHER, PLATE ARANDELA PLANA		2	2			

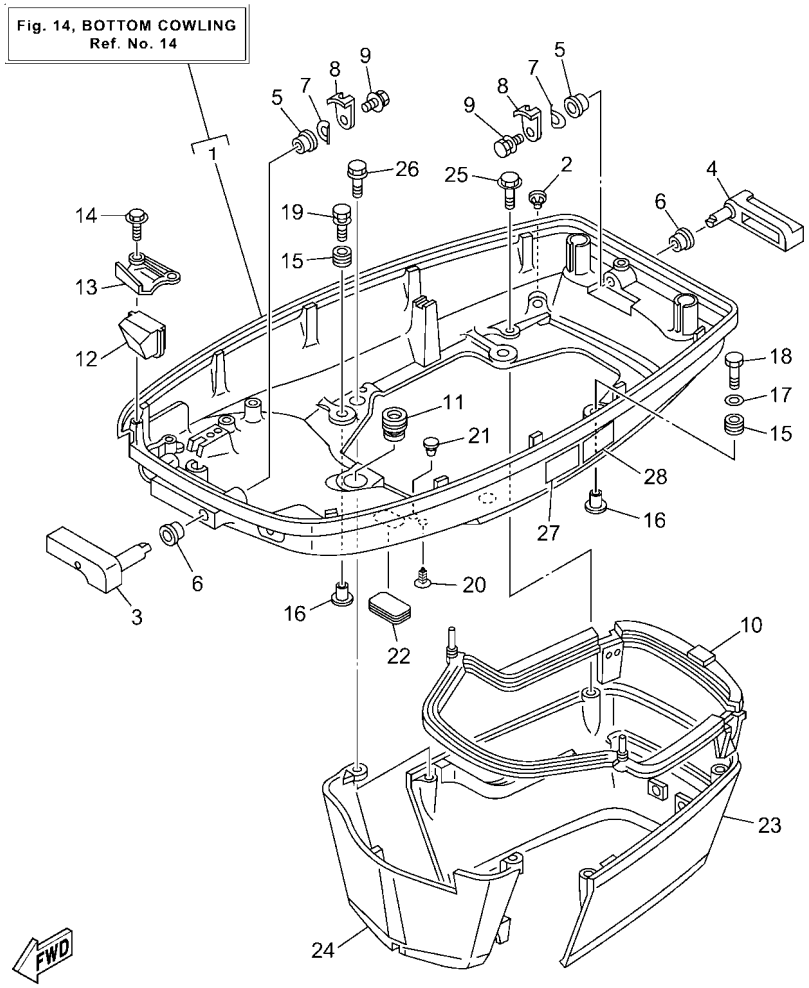

6GJB200-Y140

FIG. 14 BOTTOM COWLING — CUBIERTA INFERIOR

REF. NO.	PART NO. CODIGO Nº	DESCRIPTION DESCRIPCION	MHD	ED	EHD			REMARKS OBSERVACIONES
1	688–42710–10–8D	BOTTOM COWLING ASSY CUBIERTA INFERIOR COMPL.	1	1	1			
2	6BL–44391–00	NIPPLE, HOSE NIPLE MANGUERA	1	1	1			
3	688–42815–01–8D	LEVER, CLAMP 1 PALANCA ABRAZADERA 1	1	1	1			
4	688–42817–01–8D	LEVER, CLAMP 3 PALANCA ABRAZADERA 3	1	1	1			
5	90386–13M38	BUSH BUJE	2	2	2			
6	90386–16002	BUSH BUJE	2	2	2			
7	90206–13019	WASHER, WAVE ARANDELA ONDULADA	2	2	2			
8	688–42816–00	LEVER, CLAMP 2 PALANCA ABRAZADERA 2	2	2	2			
9	90119–06275	BOLT, WITH WASHER TORNILLO CON ARANDELA	2	2	2			
10	688–42716–03	RUBBER SEAL 1 SELLO DE GOMA 1	1	1	1			
11	663–42724–01	GROMMET TAPON	1	1	1			
12	692–42725–11	GROMMET TAPON	1					
	688–42725–03	GROMMET TAPON		1				
	692–42725–01	GROMMET TAPON			1			
13	688–42738–01–8D	PLATE, FITTING PLACA DE AJUSTE	1	1	1			
14	90109–06M86	BOLT PERNO	2	2	2			
15	6BG–42748–01	GROMMET TAPON	4	4	4			
16	90387–06M69	COLLAR ESPACIADOR	4	4	4			
17	90201–06416	WASHER, PLATE ARANDELA PLANA	1	1	1			
18	97D95–06030	BOLT, HEXAGON DEEP RECESS TORNILLO HEXAGONAL	1	1	1			
19	90119–06291	BOLT, WITH WASHER TORNILLO CON ARANDELA	3	3	3			
20	90338–05M03	PLUG TAPON	1	1	1			
21	703–82119–01	COVER, LEAD WIRE CUBIERTA DE CABLE CONDUCTOR	1	1	1			
22	6H4–42726–01	GROMMET TAPON	1	1	1			
23	688–42741–01–8D	APRON, 1 MANDIL 1	1	1	1			
24	688–42771–01–8D	APRON, 2 MANDIL 2	1	1	1			
25	97E95–06520	BOLT, HEXAGON W/W DEEP RECESS TORNILLO HEXAGONAL CON RONDONA	2	2	2			

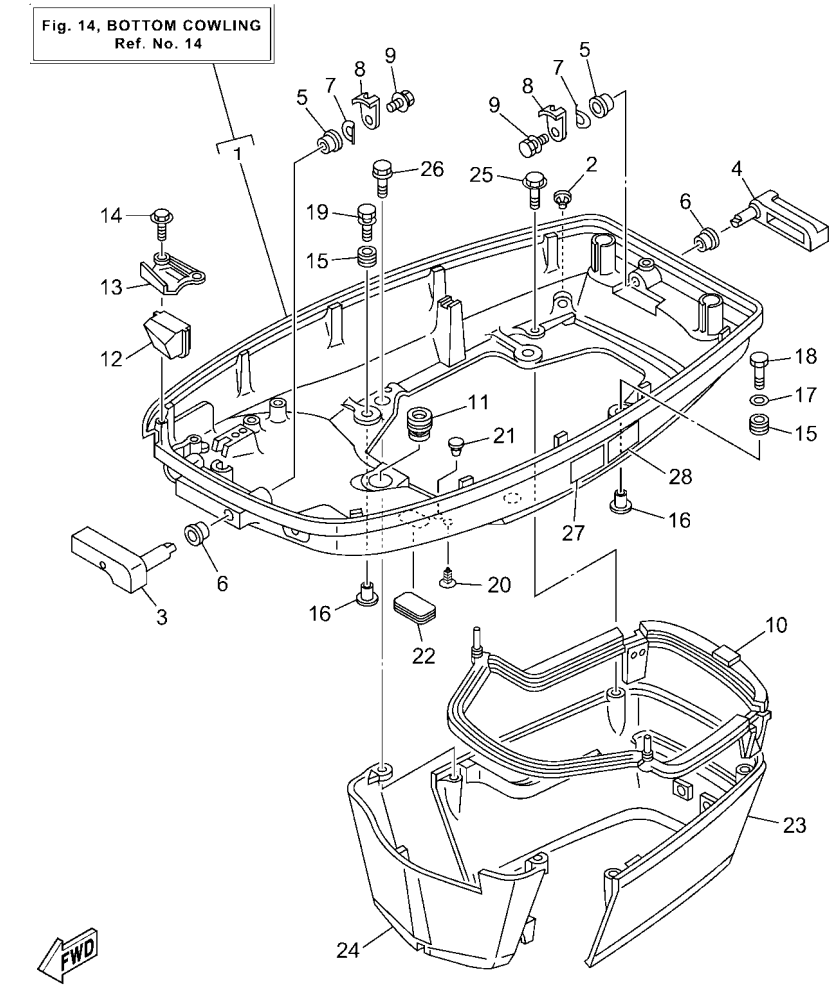

6GJB200-Y140

FIG. 14 BOTTOM COWLING — CUBIERTA INFERIOR

REF. NO.	PART NO. CODIGO Nº	DESCRIPTION DESCRIPCION	MHD	ED	EHD			REMARKS OBSERVACIONES
26	97E95–06530	BOLT, HEXAGON W/W DEEP RECESS TORNILLO HEXAGONAL CON RONDONA	2	2	2			
27	6EE–42794–40	LABEL, WARNING (GENERAL) ETIQUETA DE PRECAUCION	1	1	1			
28	6EE–42794–50	LABEL, WARNING (GENERAL) ETIQUETA DE PRECAUCION	1					FOR AFR FOR AFR

FIG. 15 STEERING — DIRECCION

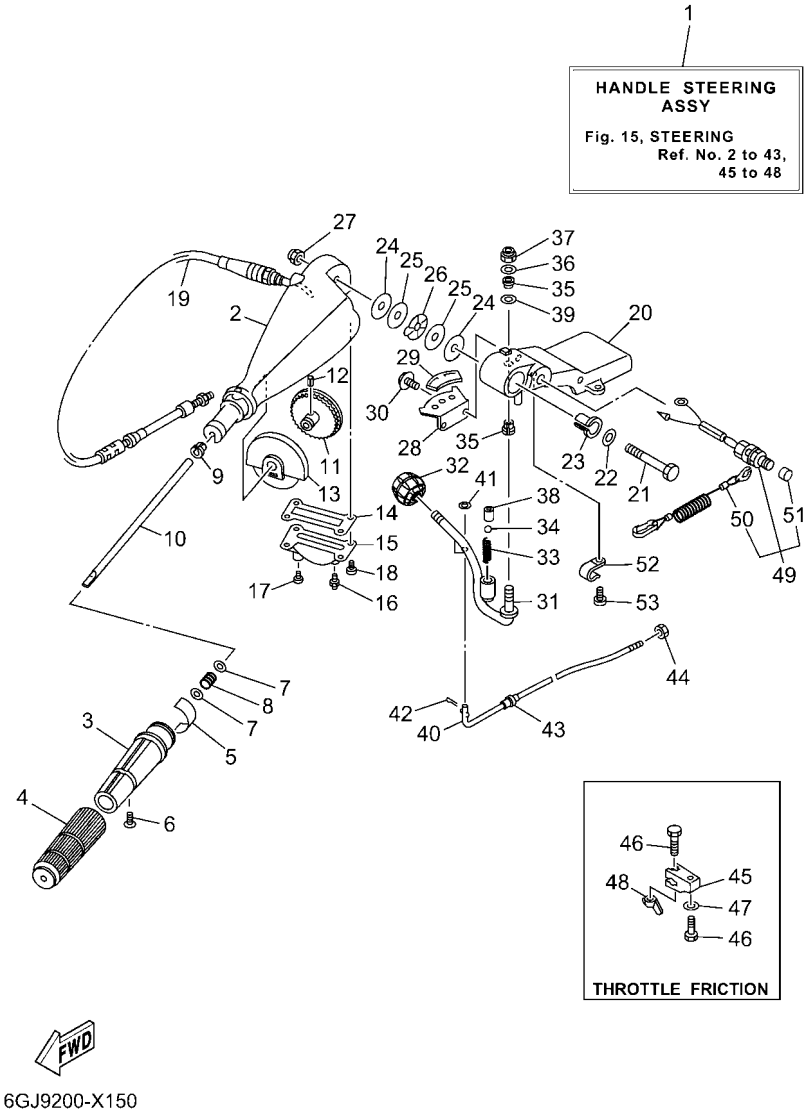

REF. NO.	PART NO. CODIGO Nº	DESCRIPTION DESCRIPCION	MHD	ED	EHD			REMARKS OBSERVACIONES
1	692–W0084–14–8D	HANDLE STEERING ASSY CONJUNTO DE MANIJA	1		1			
2	692–42111–12–8D	HANDLE, STEERING MANIJA DE DIRECCION	1		1			
3	664–42119–00	GRIP, STEERING HANDLE MANGO, MANIJA DE DIRRECCION	1		1			
4	6G1–42177–01	RUBBER, HANDLE HULE DE MANIJA	1		1			
5	688–42137–00	INDICATOR, THROTTLE INDICADOR ACELERADOR	1		1			
6	90152–05011	SCREW, COUNTERSUNK TORNILLO EMBUTIDO	1		1			
7	90201–10M02	WASHER, PLATE ARANDELA PLANA	2		2			
8	90501–23215	SPRING, COMPRESSION RESORTE DE COMPRESION	1		1			
9	90386–08032	BUSH BUJE	1		1			
10	692–42115–00	SHAFT, STEERING HANDLE EJE MANIJA DE DIRECCION	1		1			
11	663–42138–00	LEVER, THROTTLE PLANCA DE ACELERACION	1		1			
12	90254–03003	PIN, SPRING PASADOR DE TIPO A RESORTE	1		1			
13	692–42135–00	HOUSING, THROTTLE LEVER CAJA PALANCA ACELERADOR	1		1			
14	663–42133–01	GASKET EMPAQUE	1		1			
15	692–42134–03–8D	COVER, THROTTLE LEVER CUBIERTA PALANCA ACELERADOR	1		1			
16	93700–06002	NIPPLE, GREASE BOQUILLA DE ENGRASAR	1		1			
17	97885–06008	SCREW, PAN HEAD TORNILLO A MUESCA	1		1			
18	97885–05012	SCREW, PAN HEAD TORNILLO A MUESCA	4		4			
19	692–26301–03	THROTTLE CABLE ASSY CABLE DE ACELERADOR COMPLETO	1		1			
20	692–42121–02–8D	BRACKET SOPORTE	1		1			
21	90101–12075	BOLT TORNILLO	1		1			
22	92990–12200	WASHER, PLAIN ARANDELA PLANA	1		1			
23	90386–12089	BUSH BUJE	1		1			
24	90202–12092	WASHER, PLATE ARANDELA DE PLANA	2		2			
25	90201–12537	WASHER, PLATE ARANDELA PLANA	2		2			
26	90206–12054	WASHER, WAVE ARANDELA ONDULADA	1		1			
27	90185–12058	NUT, SELF-LOCKING TUERCA AUTOBLOCANTE	1		1			

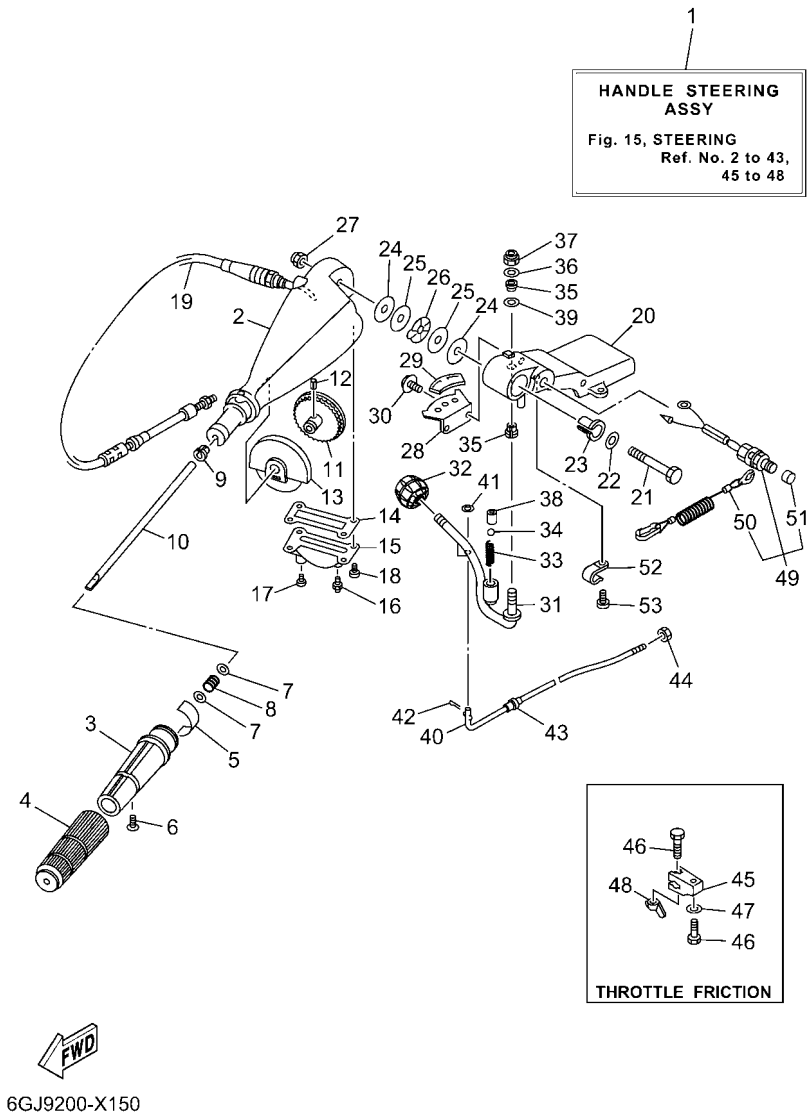

FIG. 15 STEERING — DIRECCION

REF. NO.	PART NO. CODIGO Nº	DESCRIPTION DESCRIPCION	MHD	ED	EHD			REMARKS OBSERVACIONES
28	697–44113–01	CAM PLATE, HANDLE PLACA DE LA LEVA DEL MANGO	1		1			
29	6K5–44191–00	INDICATOR, SHIFT INDICADOR DE CAMBIOS	1		1			
30	97513–06516	BOLT, WITH WASHER PERNO CON ARANDELA	2		2			
31	692–44159–02	HANDLE, GEAR SHIFT MANIJA DE CAMBIO DE MARCHAS	1		1			
32	663–44173–01	LEVER, SHIFT CONTROL PALANCA CONTROL CAMBIOS	1		1			
33	90501–16M17	SPRING, COMPRESSION RESORTE DE COMPRESION	1		1			
34	93515–32M01	BALL ESFERA	1		1			
35	90386–10009	BUSH BUJE	2		2			
36	90201–10120	WASHER, PLATE ARANDELA PLANA	1		1			
37	90185–10027	NUT, SELF-LOCKING TUERCA AUTOBLOCANTE	1		1			
38	90387–12M30	COLLAR ESPACIADOR	1		1			
39	90201–12M34	WASHER, PLATE ARANDELA PLANA	1		1			
40	692–42164–00	ROD, MANUAL SHIFT VARILLA DE CAMBIOS MANUAL	1		1			
41	92990–06600	WASHER, PLATE ARANDELA PLANA	1		1			
42	91490–25012	PIN. COTTER CHAVETA	1		1			
43	90386–06088	BUSH BUJE	1		1			
44	700–48339–00	NUT, CABLE END TUERCA TERMINAL	1		1			
45	663–42126–01	FRICTION, STEERING HANDLE GRIP FRICCION DE MANGO DIRECCION	1		1			
46	90101–06M27	BOLT TORNILLO	2		2			
47	92990–06600	WASHER, PLATE ARANDELA PLANA	1		1			
48	90175–06003	NUT, WING TUERCA MARIPOSA	1		1			
49	697–82575–00	ENGINE STOP SWITCH ASSY INTERRUPTOR DE PARADA COMPL	1					
50	682–82556–00	.LANYARD, STOP SWITCH .CORDON DE INTERRUPTOR PARADA	1					
51	689–8257Y–00	.CAP .TAPA	1					
52	90465–06M90	CLAMP BRIDA	1					
53	97885–06012	SCREW, PAN HEAD TORNILLO A MUESCA	1					

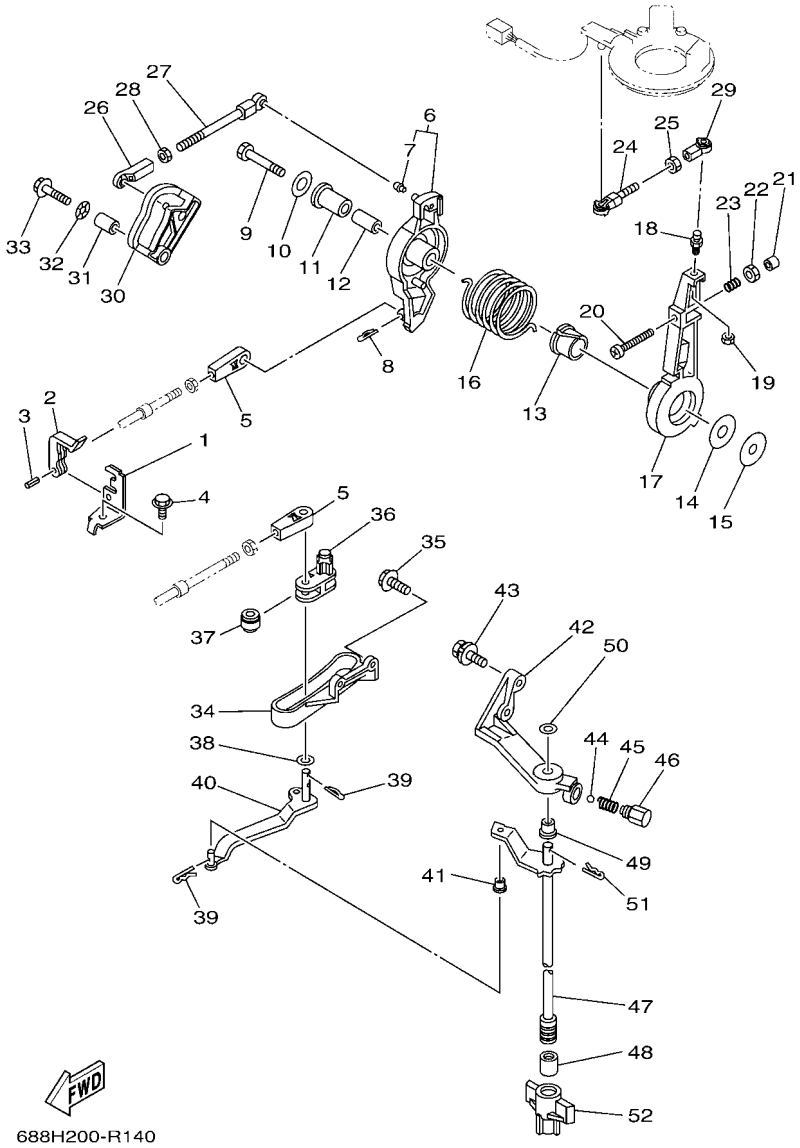

FIG. 16 CONTROL

CONTROL

REF. NO.	PART NO. CODIGO Nº	DESCRIPTION DESCRIPCION	MHD	ED	EHD			REMARKS OBSERVACIONES
1	663–48531–00	BRACKET, REMOTE CONTROL SOPORTE DE CONTROL REMOTO	1	1	1			
2	663–48538–00	CLAMP, CABLE 1 GRAMPA DE CABLE	1	1	1			
3	91690–30012	PIN, SPRING PASADOR DE RESORTE	1	1	1			
4	97E95–08516	BOLT, HEXAGON W/W DEEP RECESS TORNILLO HEXAGONAL CON RONDONA	1	1	1			
5	6FM–48344–00	CABLE END, REMOTE CONTROL BASE CONTROL	2	2	2			
6	688–41632–09–1S	LEVER, MAGNETO CONTROL PALANCA DE CONTROL DE MAGNETO	1	1	1			
7	662–41214–01	.JOINT 1 .CONECTOR	1	1	1			
8	90468–18008	CLIP PRESILLA	1	1	1			
9	97D95–08045	BOLT, HEXAGON DEEP RECESS TORNILLO HEXAGONAL	1	1	1			
10	90201–08M23	WASHER, PLATE ARANDELA PLANA	1	1	1			
11	90386–12089	BUSH BUJE	1	1	1			
12	90387–08M16	COLLAR ESPACIADOR	1	1	1			
13	90386–22M13	BUSH BUJE	1	1	1			
14	90202–12092	WASHER, PLATE ARANDELA DE PLANA	1	1	1			
15	90201–08M13	WASHER, PLATE ARANDELA PLANA	1	1	1			
16	90508–29M05	SPRING, TORSION RESORTE DE TORSION	1	1	1			
17	688–41631–01–1S	LEVER, MAGNETO CONTROL PALANCA DE CONTROL DE MAGNETO	1	1	1			
18	663–85518–00	JOINT, BALL CONECTOR	1	1	1			
19	95303–05700	NUT TUERCA	1	1	1			
20	90157–06013	SCREW, PAN HEAD TORNILLO CABEZA CONICA PLANA	1	1	1			
21	688–44194–00	CAP TAPA	1	1	1			
22	95303–06600	NUT TUERCA	1	1	1			
23	90501–16M12	SPRING, COMPRESSION RESORTE DE COMPRESION	1	1	1			
24	682–41237–50	JOINT, LINK CONECTOR	1	1	1			
25	95380–05600	NUT TUERCA	1	1	1			
26	682–41237–00	JOINT, LINK CONECTOR	1	1	1			
27	688–41211–01	LINK, ACCEL. ESLABON, ACELERADOR	1	1	1			

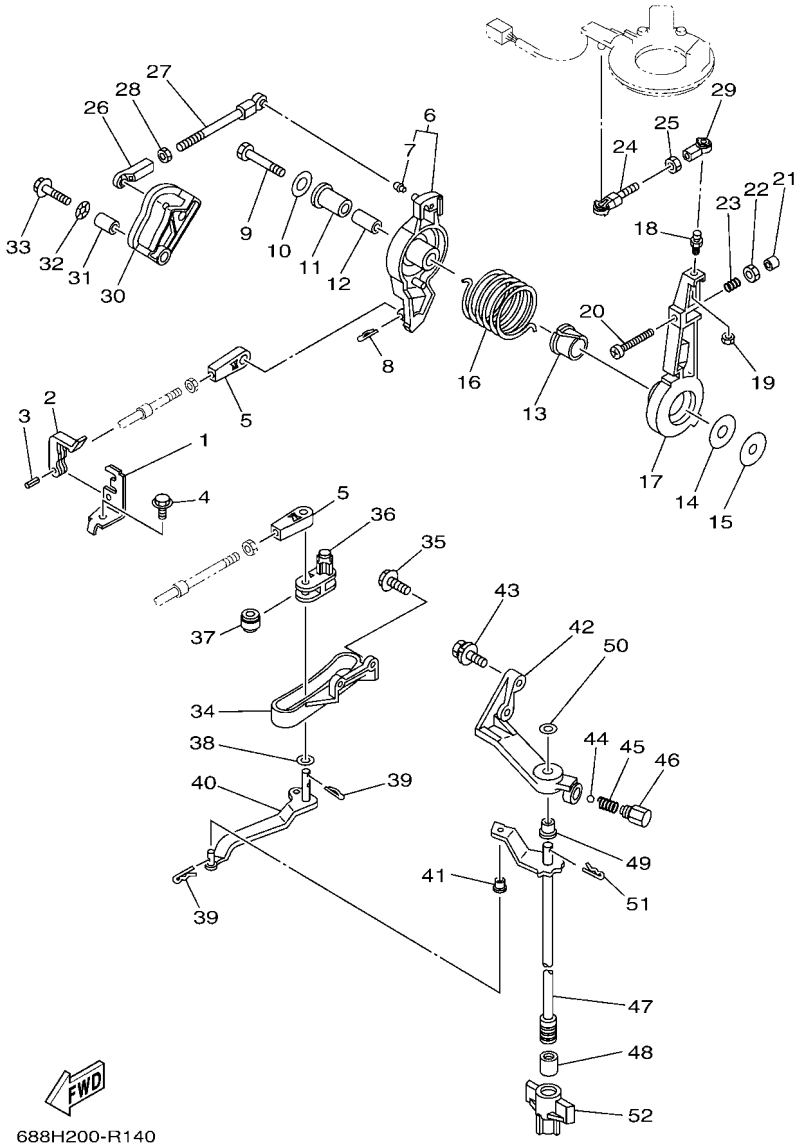

FIG. 16 CONTROL — CONTROL

REF. NO.	PART NO. CODIGO Nº	DESCRIPTION DESCRIPCION	MHD	ED	EHD			REMARKS OBSERVACIONES
28	95380–05600	NUT TUERCA	1	1	1			
29	682–41237–00	JOINT, LINK CONECTOR	1	1	1			
30	688–41213–01	CAM, ACCEL. LEVA ACELERADOR	1	1	1			
31	90387–06M17	COLLAR ESPACIADOR	1	1	1			
32	90206–10M04	WASHER, WAVE ARANDELA ONDULADA	1	1	1			
33	90119–06298	BOLT, WITH WASHER TORNILLO CON ARANDELA	1	1	1			
34	688–44117–00–94	BRACKET SOPORTE	1	1	1			
35	97513–06520	BOLT, WITH WASHER PERNO CON ARANDELA	2	2	2			
36	688–44124–00	LINK, SHIFT ROD ESLABON	1	1	1			
37	688–44122–00	BUSHING, SHIFT ROD LEVER BUJE PALANCA VARILLA DE CAMBIO	1	1	1			
38	90202–07M07	WASHER, PLATE ARANDELA DE PLANA	1	1	1			
39	90468–18008	CLIP PRESILLA	3	3	3			
40	688–44121–02	LEVER, SHIFT ROD PALANCA VARILLA CAMBIOS	1	1	1			EXCEPT FOR MYS EXCEPT FOR MYS
	6H1–44121–00	LEVER, SHIFT ROD PALANCA VARILLA CAMBIOS	1					FOR MYS FOR MYS
41	90386–06M12	BUSH BUJE	1	1	1			EXCEPT FOR MYS EXCEPT FOR MYS
42	688–44118–01–94	BRACKET SOPORTE	1	1	1			
43	97513–08630	BOLT, WITH WASHER PERNO CON ARANDELA	2	2	2			
44	93501–04M02	BALL BOLA	1	1	1			
45	90501–12082	SPRING, COMPRESSION RESORTE DE COMPRESION	1	1	1			
46	648–42715–00	BUSHING 2 BUJE 2	1	1	1			
47	692–44120–14	HANDLE GEAR SHIFT ASSY MANIJA DE CAMBIO COMPL	1					L(20.5") L(20.5")
	688–44120–14	HANDLE GEAR SHIFT ASSY MANIJA DE CAMBIO COMPL		1	1			L(20.5") L(20.5")
	692–44120–02	HANDLE GEAR SHIFT ASSY MANIJA DE CAMBIO COMPL	1					L(20.5")-FOR MYS L(20.5")-FOR MYS
	692–44120–44	HANDLE GEAR SHIFT ASSY MANIJA DE CAMBIO COMPL	1					Y(22.5") Y(22.5")
	692–44120–24	HANDLE GEAR SHIFT ASSY MANIJA DE CAMBIO COMPL	1					X(25.5") X(25.5")
	688–44120–24	HANDLE GEAR SHIFT ASSY MANIJA DE CAMBIO COMPL			1			X(25.5") X(25.5")
48	696–44147–00	BOOT, SHIFT ROD HULE DE VARILLA	1	1	1			EXCEPT FOR MYS EXCEPT FOR MYS

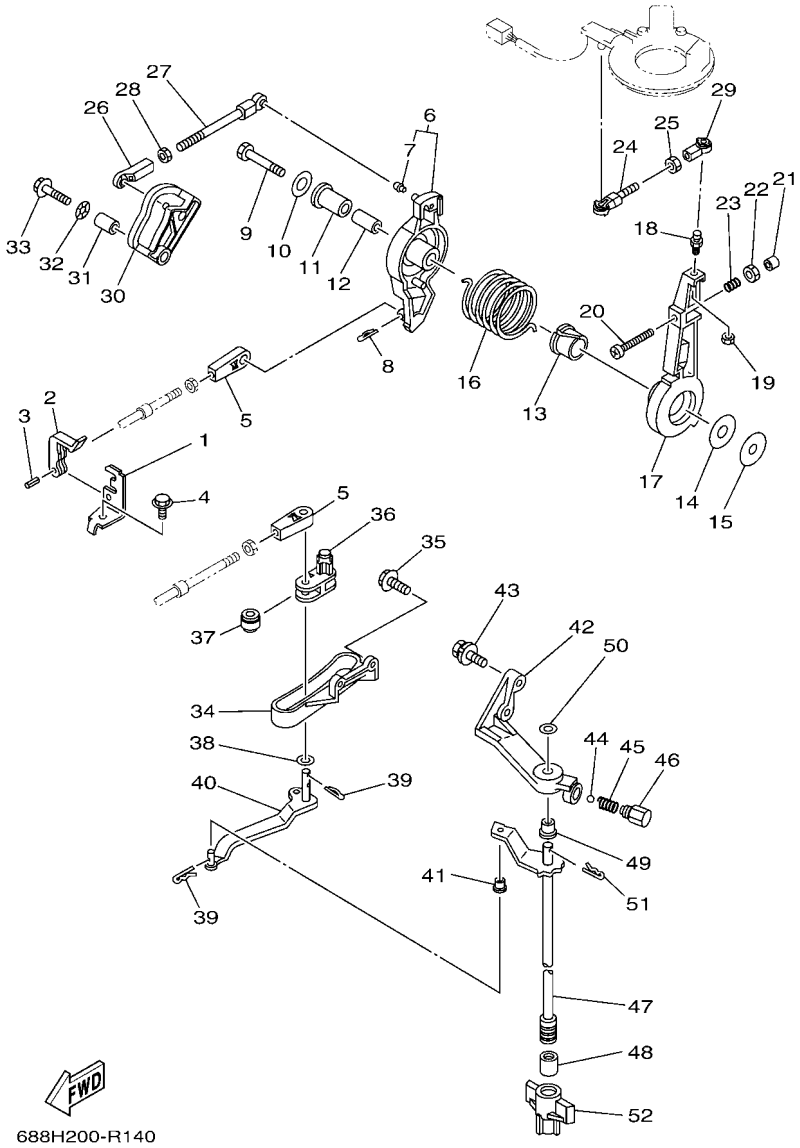

FIG. 16 CONTROL — CONTROL

REF. NO.	PART NO. CODIGO Nº	DESCRIPTION DESCRIPCION	MHD	ED	EHD			REMARKS OBSERVACIONES
49	90386–08006	BUSH BUJE	1	1	1			EXCEPT FOR MYS EXCEPT FOR MYS
	90386–07M58	BUSH BUJE	1					FOR MYS FOR MYS
50	92990–08200	WASHER, PLAIN ARANDELA PLANA	1	1	1			
51	90468–18008	CLIP PRESILLA	1	1	1			
52	697–43662–00	GUIDE, REVERSE ROD GUIA DE LA VARILLA DE REVERSE	1	1	1			EXCEPT FOR MYS EXCEPT FOR MYS

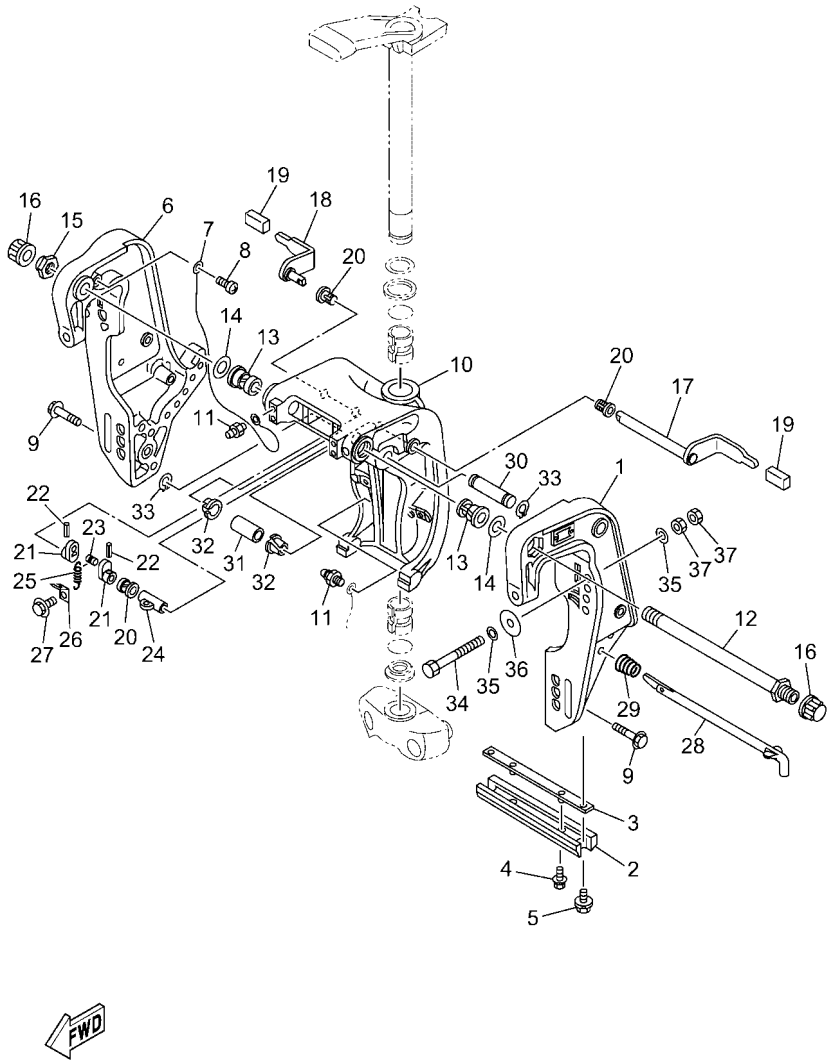

63SR200-Y150

FIG. 17 BRACKET 1 — SOPORTE 1

REF. NO.	PART NO. CODIGO Nº	DESCRIPTION DESCRIPCION	MHD	ED	EHD			REMARKS OBSERVACIONES
1	688–43111–13–8D	BRACKET, CLAMP 1 SOPORTE DE LA ABRAZADERA 1	1	1	1			
2	6H1–45251–03	ANODE CATODE	1	1	1			
3	6EK–44536–00	PLATE 2 PLACA 2	1	1	1			
4	90119–06274	BOLT, WITH WASHER TORNILLO CON ARANDELA	2	2	2			
5	97E95–06616	BOLT, HEXAGON W/W DEEP RECESS TORNILLO HEXAGONAL CON RONDONA	2	2	2			
6	688–43112–12–8D	BRACKET, CLAMP 2 SOPORTE DE LA ABRAZADERA 2	1	1	1			
7	6E5–82148–00	WIRE, LEAD 4 CABLE CONDUCTOR 4	1	1	1			
8	97880–06012	SCREW, PAN HEAD TORNILLO DE CABEZA CON PLANA	1	1	1			
9	97E95–10545	BOLT, HEXAGON W/W DEEP RECESS TORNILLO HEXAGONAL CON RONDONA	6	6	6			
10	6H1–43311–02–8D	BRACKET, SWIVEL 1 SOPORTE GIRATORIO 1	1	1	1			
11	93700–06004	NIPPLE, GREASE BOQUILLA DE ENGRASAR	3	3	3			
12	688–43131–03	BOLT, CLAMP BRACKET TORNILLO DE ABRAZADERA DEL SOP	1	1	1			
13	90386–22M15	BUSH BUJE	2	2	2			
14	90201–22M67	WASHER, PLATE ARANDELA PLANA	2	2	2			
15	90185–22043	NUT, SELF-LOCKING TUERCA AUTOBLOCANTE	1	1	1			
16	6G5–43145–01	CAP, CLAMP BRACKET TAPA	2	2	2			
17	688–43181–10	LEVER, TILT STOP 1 PALANCA TOPE INCLINACION 1	1	1	1			
18	688–43185–10	LEVER, TILT STOP 2 PALANCA TOPE INCLINACION 2	1	1	1			
19	663–43318–00	COVER CUBIERTA	2	2	2			
20	90386–10M16	BUSH BUJE	3	3	3			
21	6G5–43148–00	COLLAR, DISTANCE COLLAR	2	2	2			
22	91690–30020	PIN, SPRING PASADOR DE RESORTE	2	2	2			
23	90249–06M19	PIN PASADOR	1	1	1			
24	90387–10M02	COLLAR ESPACIADOR	1	1	1			
25	90506–14M24	SPRING, TENSION RESORTE DE TENSION	1	1	1			
26	6G5–43144–00	HOOK, SPRING GANCHO	1	1	1			
27	97E95–06512	BOLT, HEXAGON W/W DEEP RECESS TORNILLO HEXAGONAL CON RONDONA	1	1	1			

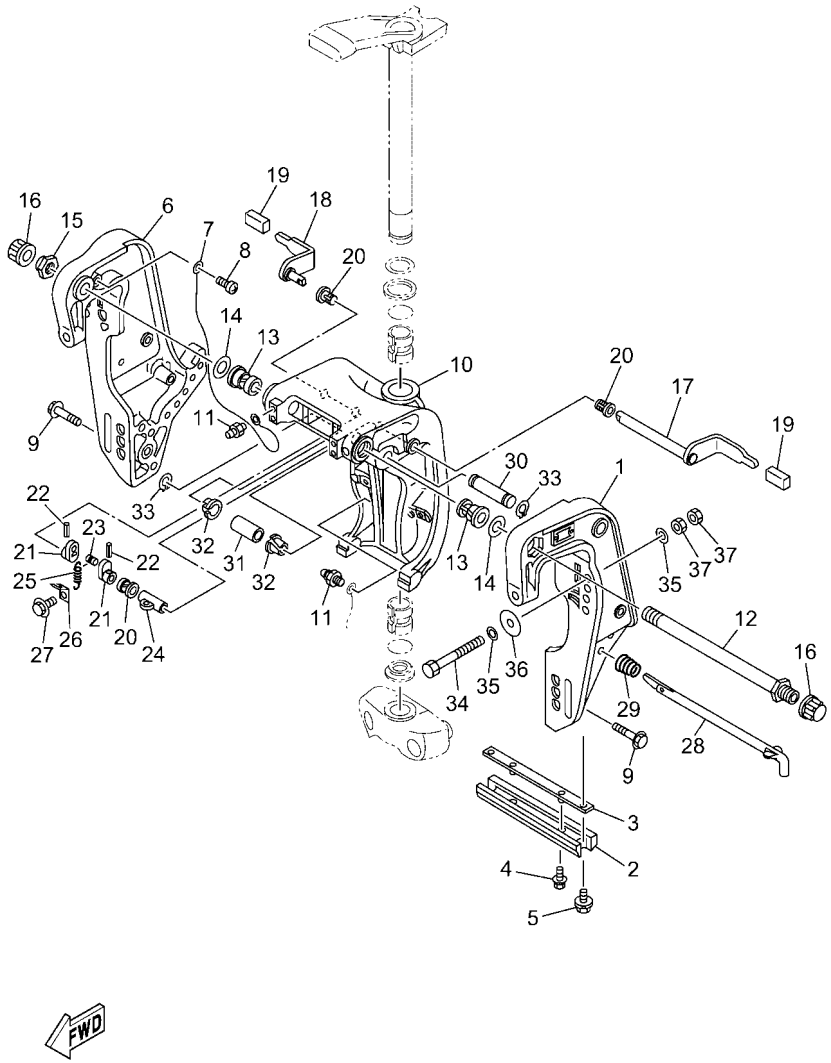

63SR200-Y150

FIG. 17 BRACKET 1 — SOPORTE 1

REF. NO.	PART NO. CODIGO Nº	DESCRIPTION DESCRIPCION	MHD	ED	EHD			REMARKS OBSERVACIONES
28	688–43160–01	TILT ROD ASSY VARILLA DE BASCULACION COMPL.	1	1	1			
29	90502–16M02	SPRING, CONICAL RESORTE CONICO	1	1	1			
30	6E5–43126–10	PIN, UPPER SHOCK MOUNT PASADOR DE AMORTIGUADOR SUPERI	1	1	1			
31	90386–18M21	BUSH BUJE	1	1	1			
32	90386–18M35	BUSH BUJE	2	2	2			
33	93410–18M05	CIRCLIP SEGURO	2	2	2			
34	90101–12063	BOLT (L:105MM) TORNILLO (L:105MM)	4	4	4			
35	90201–12062	WASHER, PLATE ARANDELA PLANA	8	8	8			
36	90201–12426	WASHER, PLATE ARANDELA PLANA	4	4	4			
37	95380–12600	NUT TUERCA	8	8	8			

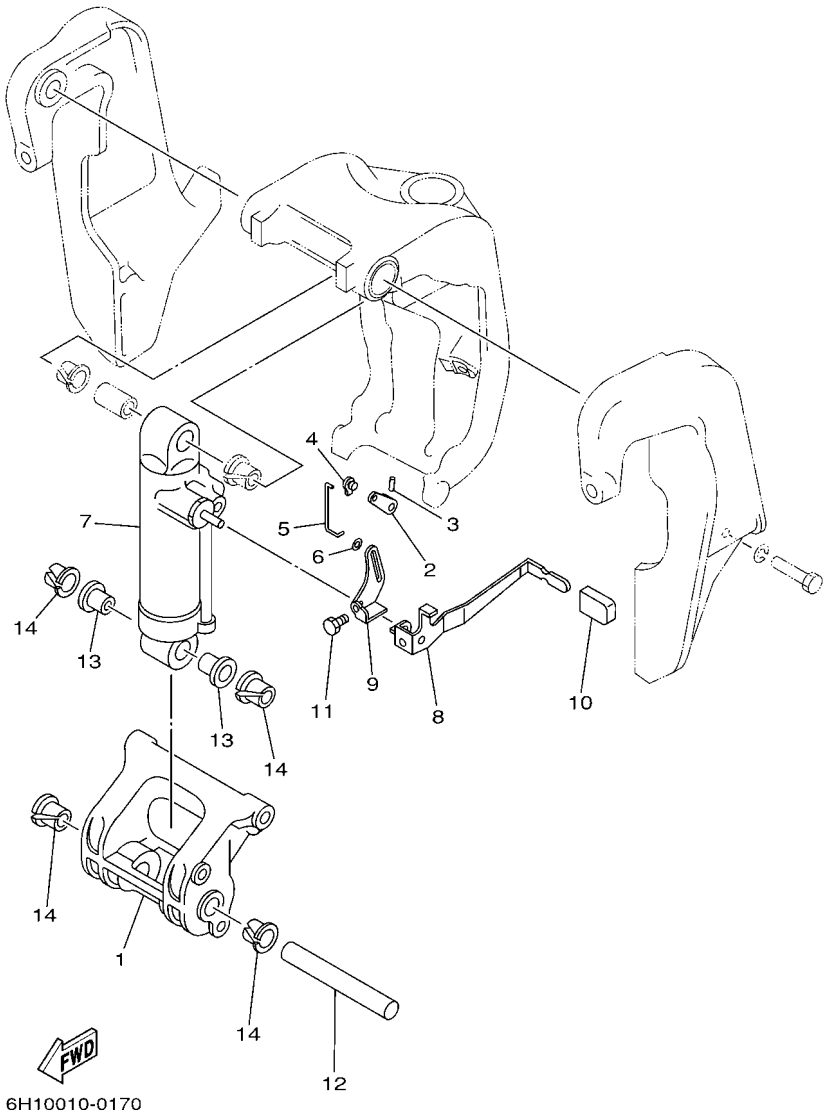

FIG. 18 BRACKET 2 — SOPORTE 2

REF. NO.	PART NO. CODIGO Nº	DESCRIPTION DESCRIPCION	MHD	ED	EHD			REMARKS OBSERVACIONES
1	688–43128–01–8D	SPACER, CLAMP BRACKET ESPACIADOR ABRAZADERA SOPORTE	1	1	1			
2	688–43186–00	LEVER PALANCA	1	1	1			
3	91690–30020	PIN, SPRING PASADOR DE RESORTE	1	1	1			
4	6J8–41262–00	JOINT, CHOKE LEVER CONECTOR DE AHOGADOR	1	1	1			
5	688–43616–00	ROD, TILT LOCK VARILLA SEGURO DE INCLINACION	1	1	1			
6	90202–03M51	WASHER, PLATE ARANDELA DE PLANA	1	1	1			
7	688–43107–05–8D	SHOCK ABSORBER SUB-ASSY AMORTIGUADOR COMPL	1	1	1			
8	688–43631–10	LEVER, TILT PALANCA DE INCLINACION	1	1	1			
9	688–43651–00	LEVER, REVERSE LOCK 1 PALANCA SEGURO DE RESERVA	1	1	1			
10	682–43318–01	COVER CUBIERTA	1	1	1			
11	97080–06010	BOLT PERNO	1	1	1			
12	688–43124–02	PIN, LOWER SHOCK MOUNT PASADOR DE AMORTIGUADOR INFERI	1	1	1			
13	90386–18M63	BUSH BUJE	2	2	2			
14	90386–18M35	BUSH BUJE	4	4	4			

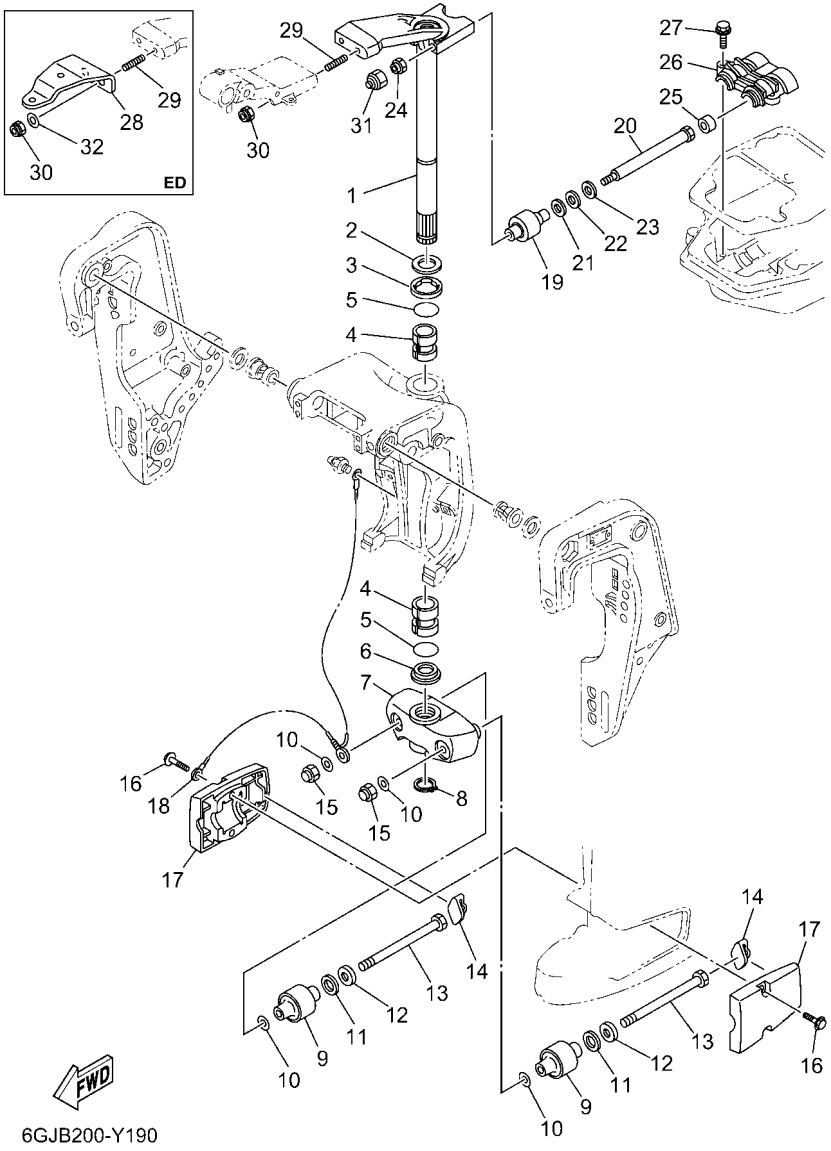

FIG. 19 BRACKET 3 — SOPORTE 3

REF. NO.	PART NO. CODIGO Nº	DESCRIPTION DESCRIPCION	MHD	ED	EHD			REMARKS OBSERVACIONES
1	692–42510–00–8D	STEERING BRACKET ASSY SOPORTE DIRECCION COMPL.	1	1	1			
2	90201–30M00	WASHER, PLATE ARANDELA PLANA	1	1	1			
3	90386–30M78	BUSH BUJE	1	1	1			
4	90386–30M77	BUSH BUJE	2	2	2			
5	93210–29M94	O-RING ANILLO O	2	2	2			
6	90386–30M60	BUSH BUJE	1	1	1			
7	692–44551–00–8D	HOUSING, LOWER MOUNT RUBBER 1 CAJA AMORTIGUADOR INFERIOR HU	1	1	1			
8	93410–28M06	CIRCLIP SEGURO	1	1	1			
9	687–44555–00	MOUNT DAMPER, LOWER SIDE AMORTIGUADOR DE HULE LADO INFE	2	2	2			
10	90201–12M16	WASHER, PLATE ARANDELA PLANA	4	4	4			
11	90202–25M04	WASHER, PLATE ARANDELA DE PLANA	2	2	2			
12	90201–13M19	WASHER, PLATE ARANDELA PLANA	2	2	2			
13	90109–12261	BOLT PERNO	2	2	2			
14	688–44575–01	DAMPER, LOWER MOUNT RUBBER AMORTIGUADOR INFERIOR	2	2	2			
15	90176–12004	NUT, CAP TUERCA DE TAPA	2	2	2			
16	97E75–08540	BOLT, HEXAGON W/W DEEP RECESS TORNILLO HEXAGONAL CON RONDONA	4	4	4			
17	688–44553–10–8D	COVER, LOWER MOUNT CUBIERTA,AMORTIGUADOR INFERIOR	2	2	2			
18	6H1–82127–00	WIRE, LEAD 2 CABLE CONDUCTOR 2	1	1	1			
19	688–44514–00	MOUNT DAMPER, UPPER SIDE AMORTIGUADOR LADO SUPERIOR	2	2	2			
20	90101–10041	BOLT TORNILLO	2	2	2			
21	90201–20M21	WASHER, PLATE ARANDELA PLANA	2	2	2			
22	90202–20M06	WASHER, PLATE ARANDELA DE PLANA	2	2	2			
23	90201–11M22	WASHER, PLATE ARANDELA PLANA	2	2	2			
24	90185–10027	NUT, SELF-LOCKING TUERCA AUTOBLOCANTE	2	2	2			
25	663–44575–01	DAMPER, LOWER MOUNT RUBBER AMORTIGUADOR INFERIOR	2	2	2			
26	688–44511–00	COVER, UPPER MOUNT CUBIERTA AMORTIGUADOR SUPERIOR	1	1	1			
27	97E75–08535	BOLT, HEXAGON W/W DEEP RECESS TORNILLO HEXAGONAL CON RONDONA	3	3	3			

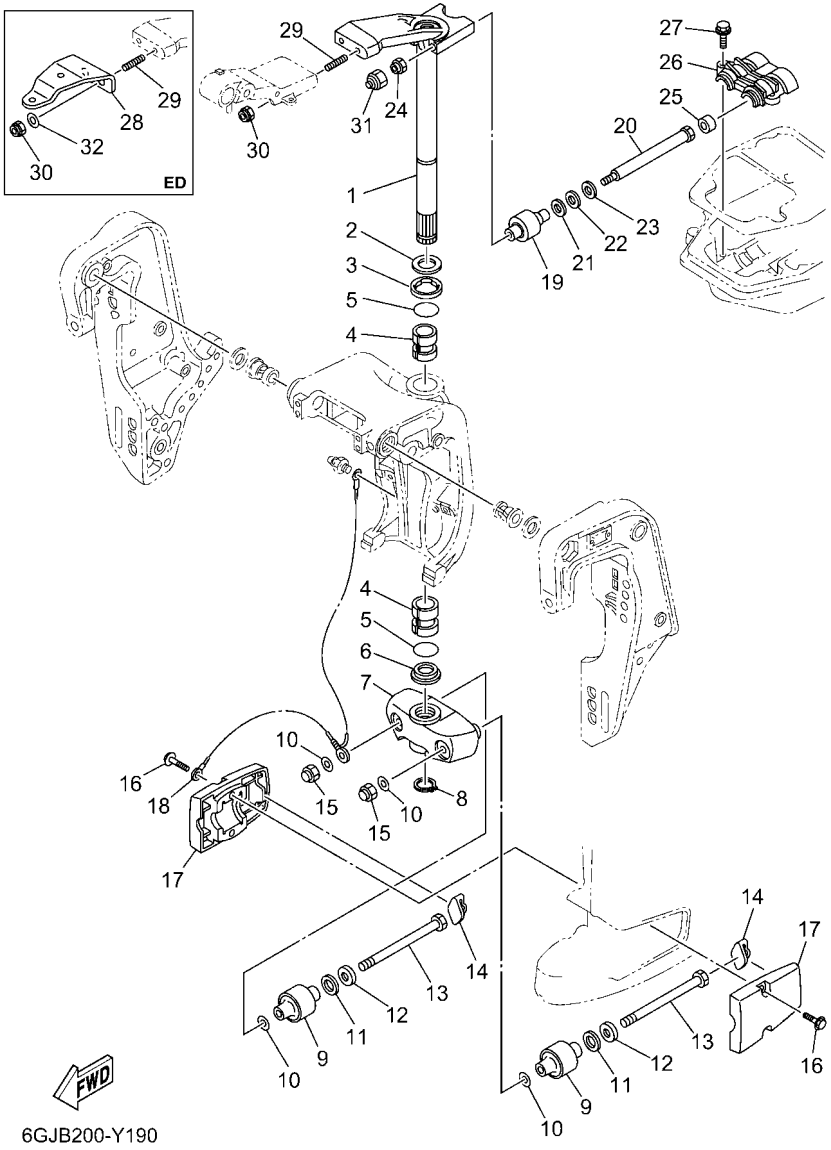

FIG. 19 BRACKET 3 SOPORTE 3

REF. NO.	PART NO. CODIGO Nº	DESCRIPTION DESCRIPCION	MHD	ED	EHD			REMARKS OBSERVACIONES
28	688–48511–12	HOOK, STEERING GANCHO DIRECCION		1				STEERING GUIDE STEERING GUIDE
29	90116–10063	BOLT, STUD ESPARRAGO	2	2	2			
30	90185–10027	NUT, SELF-LOCKING TUERCA AUTOBLOCANTE	2	2	2			
31	69D–44194–10	CAP TAPA	2	2	2			
32	90201–10049	WASHER, PLATE ARANDELA PLANA		2				

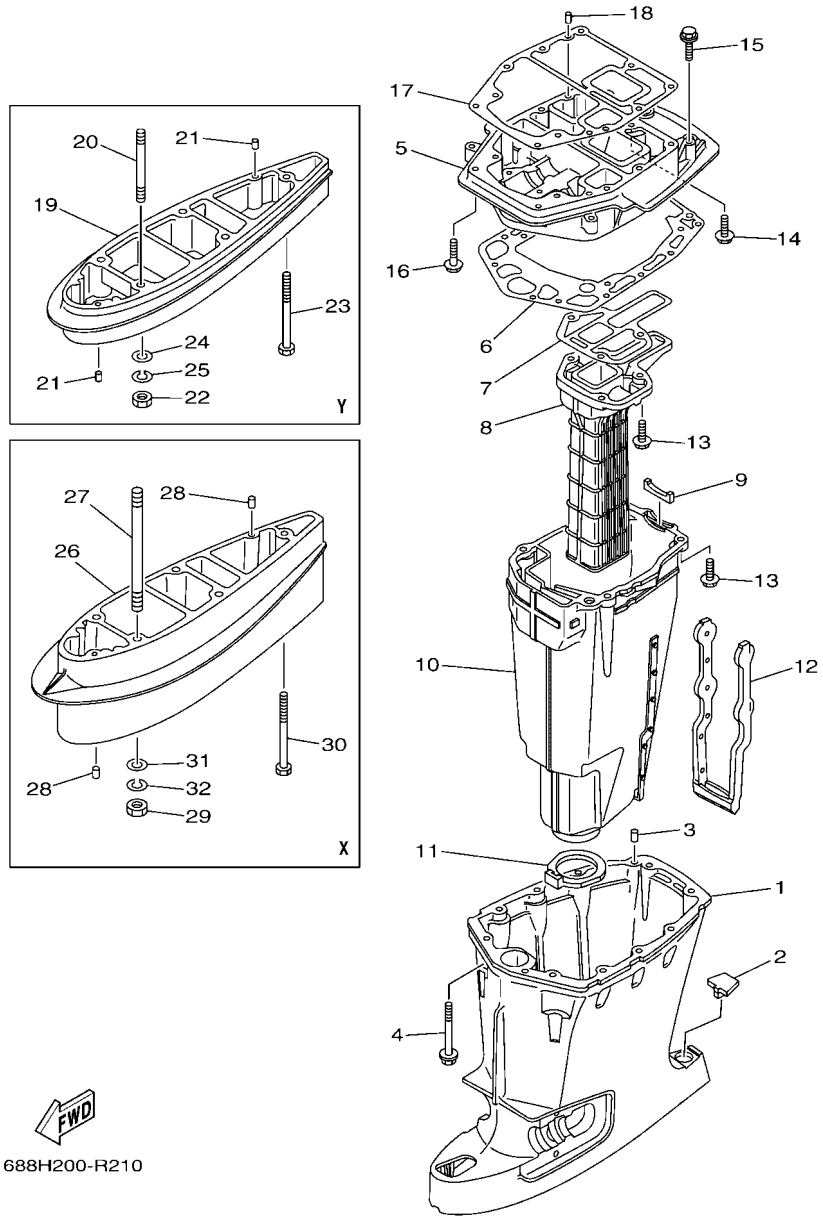

FIG. 20 UPPER CASING — FUNDA SUPERIOR

REF. NO.	PART NO. CODIGO Nº	DESCRIPTION DESCRIPCION	MHD	ED	EHD			REMARKS OBSERVACIONES
1	688–45111–04–8D	CASING, UPPER CAJA SUPERIOR	1	1	1			
2	663–45155–10	CAP TAPA	1	1	1			
3	93606–12019	PIN, DOWEL PASADOR DE CLAVIJA	2	2	2			
4	90119–08M80	BOLT, WITH WASHER TORNILLO CON ARANDELA	8	8	8			
5	688–41137–09–CA	GUIDE, EXHAUST GUIA DE ESCAPE	1	1	1			
6	688–45114–A1	GASKET, UPPER CASING EMPAQUE	1	1	1			
7	688–41134–A0	GASKET, EXHAUST MANIFOLD EMPAQUE	1	1	1			
8	688–41131–00–CA	MANIFOLD, EXT. 1 TUBO MULTIPLE DE ESCAPE	1	1				
	688–41131–10–CA	MANIFOLD, EXT. 1 TUBO MULTIPLE DE ESCAPE	1		1			MHD-FOR NME MHD-FOR NME
9	688–41133–01	GASKET, EXHAUST MANIFOLD 1 EMPAQUE ESCAPE MULTIPLE	1	1	1			
10	688–14711–01–CA	MUFFLER 1 SILENCIADOR 1	1	1				
	688–14711–10–CA	MUFFLER 1 SILENCIADOR 1	1		1			MHD-FOR NME MHD-FOR NME
11	688–45123–00	GASKET, MUFFLER EMPAQUE SILENCIADOR	1	1	1			
12	663–14737–10	DAMPER, MUFFLER AMORTIGUADOR DE SILENCIADOR	1	1	1			
13	97E75–08530	BOLT, HEXAGON W/W DEEP RECESS TORNILLO HEXAGONAL CON RONDONA	7	7	7			
14	97E75–08525	BOLT, HEXAGON W/W DEEP RECESS TORNILLO HEXAGONAL CON RONDONA	1	1	1			
15	97E75–08530	BOLT, HEXAGON W/W DEEP RECESS TORNILLO HEXAGONAL CON RONDONA	2	2	2			
16	97E75–08535	BOLT, HEXAGON W/W DEEP RECESS TORNILLO HEXAGONAL CON RONDONA	2	2	2			
17	688–45113–A0	GASKET, UPPER CASING EMPAQUE	1	1	1			
18	93606–12019	PIN, DOWEL PASADOR DE CLAVIJA	2	2	2			
19	696–45211–01–8D	EXTENSION EXTENSION	1					Y(22.5") Y(22.5")
20	90116–10M31	BOLT, STUD ESPARRAGO	4					Y(22.5") Y(22.5")
21	93606–12019	PIN, DOWEL PASADOR DE CLAVIJA	4					Y(22.5") Y(22.5")
22	95380–10600	NUT TUERCA	4					Y(22.5") Y(22.5")
23	90119–08155	BOLT, WITH WASHER TORNILLO CON ARANDELA	1					Y(22.5") Y(22.5")
24	92995–10600	WASHER ARANDELA	4					Y(22.5") Y(22.5")
25	92990–10100	WASHER, SPRING ARANDELA PLANA	4					Y(22.5") Y(22.5")

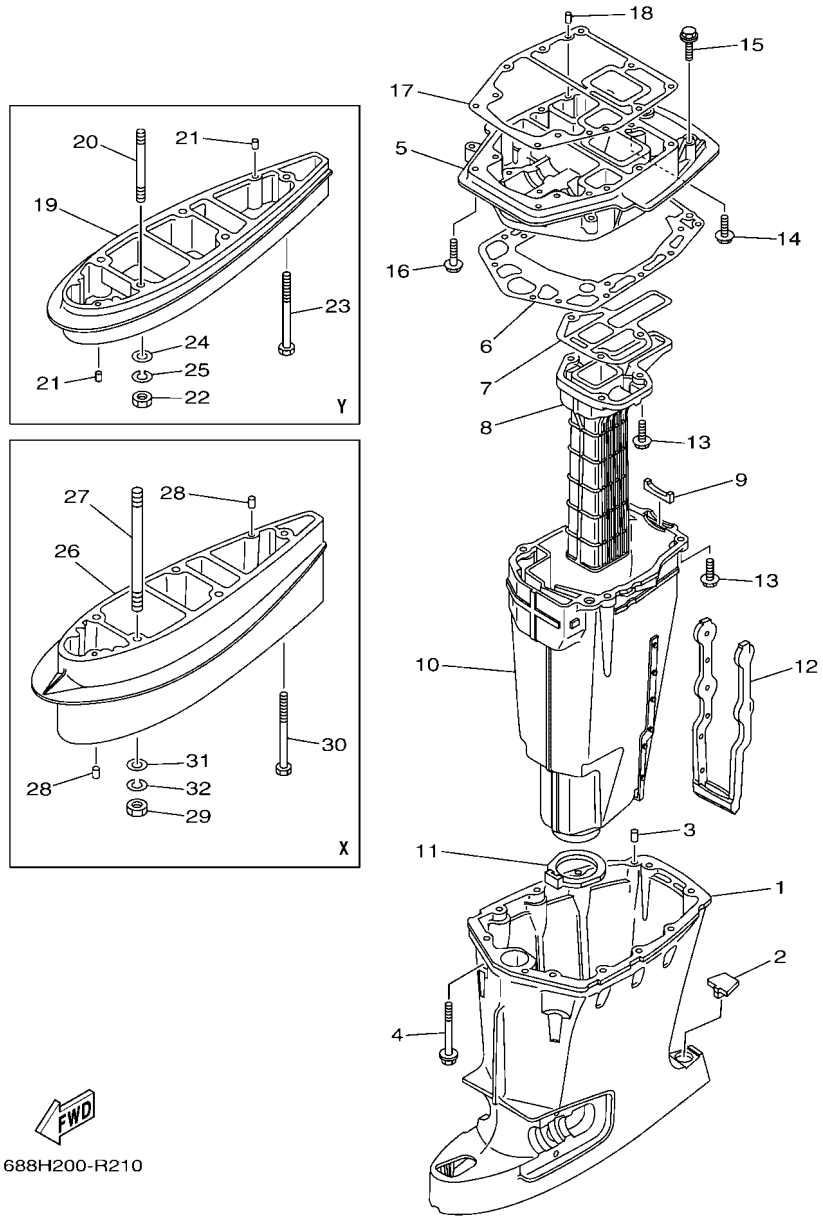

FIG. 20 UPPER CASING — FUNDA SUPERIOR

REF. NO.	PART NO. CODIGO Nº	DESCRIPTION DESCRIPCION	MHD	ED	EHD			REMARKS OBSERVACIONES
26	688–45211–01–8D	EXTENSION EXTENSION	1		1			X(25.5") X(25.5")
27	90116–10M05	BOLT, STUD ESPARRAGO	4		4			X(25.5") X(25.5")
28	93606–12019	PIN, DOWEL PASADOR DE CLAVIJA	4		4			X(25.5") X(25.5")
29	95380–10600	NUT TUERCA	4		4			X(25.5") X(25.5")
30	90119–08158	BOLT, WITH WASHER TORNILLO CON ARANDELA	1		1			X(25.5") X(25.5")
31	92995–10600	WASHER ARANDELA	4		4			X(25.5") X(25.5")
32	92990–10100	WASHER, SPRING ARANDELA PLANA	4		4			X(25.5") X(25.5")

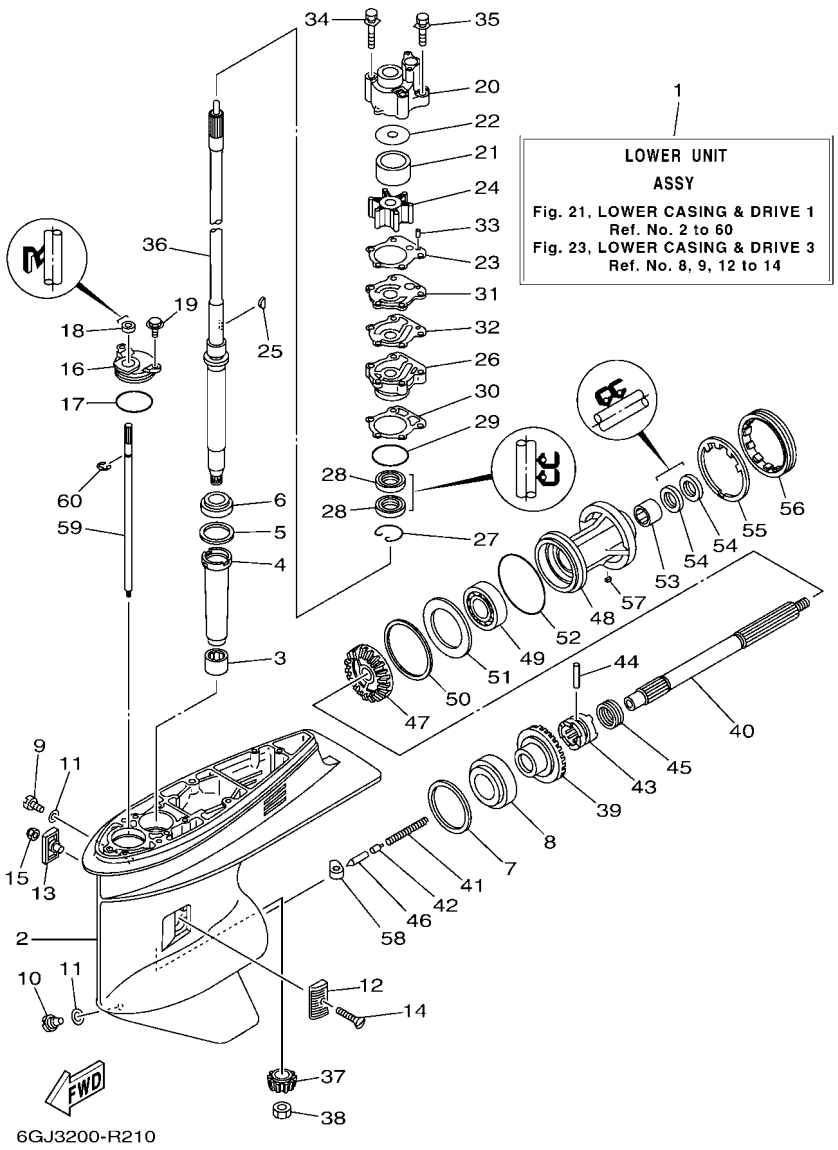

FIG. 21 LOWER CASING & DRIVE 1 — IMPULSOR E INFERIOR 1

REF. NO.	PART NO. CODIGO Nº	DESCRIPTION DESCRIPCION	MHD	ED	EHD			REMARKS OBSERVACIONES
1	692–45300–18–8D	LOWER UNIT ASSY CONJUNTO UNIDAD INFERIOR	1	1	1			L(20.5") L(20.5")
	692–45300–37–8D	LOWER UNIT ASSY CONJUNTO UNIDAD INFERIOR	1					Y(22.5") Y(22.5")
	692–45300–27–8D	LOWER UNIT ASSY CONJUNTO UNIDAD INFERIOR	1		1			X(25.5") X(25.5")
2	688–45311–06–8D	CASING, LOWER FUNDA INFERIOR	1	1	1			
3	93315–325V1	BEARING COJINETE DE RODILLOS	1	1	1			
4	688–45536–01	SLEEVE, DRIVE SHAFT CAMISA EJE DE MANDO	1	1	1			
5	688–45587–01	SHIM (T:0.10MM) LAINA (T:0.10MM)	1	1	1			UR UR
	688–45587–10	SHIM (T:0.12MM) LAINA (T:0.12MM)	1	1	1			UR UR
	688–45587–20	SHIM (T:0.15MM) LAINA (T:0.15MM)	1	1	1			UR UR
	688–45587–30	SHIM (T:0.18MM) LAINA (T:0.18MM)	1	1	1			UR UR
	688–45587–40	SHIM (T:0.30MM) LAINA (T:0.30MM)	1	1	1			UR UR
	688–45587–50	SHIM (T:0.40MM) LAINA (T:0.40MM)	1	1	1			UR UR
	688–45587–60	SHIM (T:0.50MM) LAINA (T:0.50MM)	1	1	1			UR UR
6	93332–000U3	BEARING COJINETE	1	1	1			
7	688–45567–01	SHIM (T:0.10MM) LAINA (T:0.10MM)	1	1	1			UR UR
	688–45567–10	SHIM (T:0.12MM) LAINA (T:0.12MM)	1	1	1			UR UR
	688–45567–20	SHIM (T:0.15MM) LAINA (T:0.15MM)	1	1	1			UR UR
	688–45567–30	SHIM (T:0.18MM) LAINA (T:0.18MM)	1	1	1			UR UR
	688–45567–40	SHIM (T:0.30MM) LAINA (T:0.30MM)	1	1	1			UR UR
	688–45567–50	SHIM (T:0.40MM) LAINA (T:0.40MM)	1	1	1			UR UR
	688–45567–60	SHIM (T:0.50MM) LAINA (T:0.50MM)	1	1	1			UR UR
8	93332–000W7	BEARING COJINETE	1	1	1			
9	90340–08002	PLUG, STRAIGHT SCREW TORNILLO, DE DRENAJE	1	1	1			
10	688–45341–10	PLUG, DRAIN TAPON, DREN	1	1	1			
11	90430–08003	GASKET JUNTA	2	2	2			
12	6H1–45214–00	COVER, WATER INLET 1 CUBIERTA, ENTRADA AGUA 1	1	1	1			
13	6H1–45215–00	COVER, WATER INLET 2 CUBIERTA, ENTRADA AGUA 2	1	1	1			

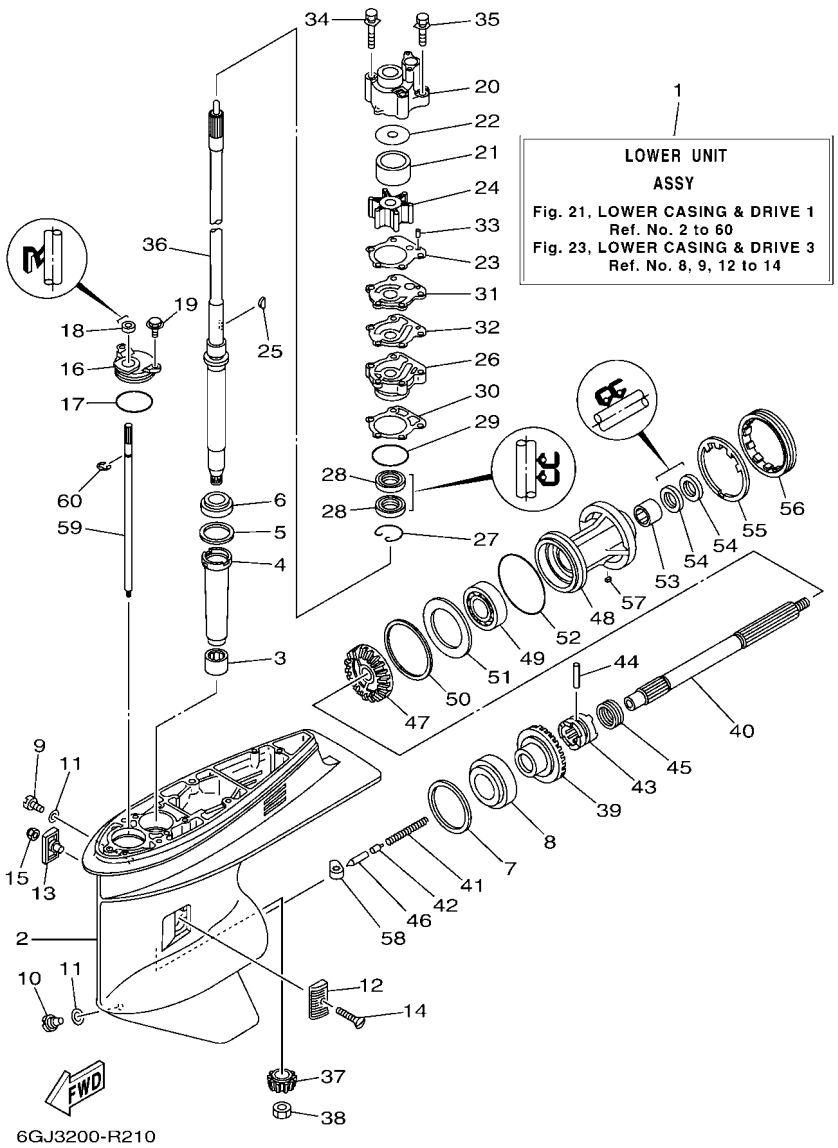

FIG. 21 LOWER CASING & DRIVE 1 — IMPULSOR E INFERIOR 1

REF. NO.	PART NO. CODIGO Nº	DESCRIPTION DESCRIPCION	MHD	ED	EHD			REMARKS OBSERVACIONES
14	90151–05M00	SCREW, COUNTERSUNK TORNILLO EMBUTIDO	1	1	1			
15	90185–05002	NUT, NYLON TUERCA AUTOBLOCANTE	1	1	1			
16	688–45321–00	PLATE PLACA	1	1	1			
17	93210–49046	O-RING ANILLO O	1	1	1			
18	93106–09014	OIL SEAL SELLO ACEITE	1	1	1			
19	97E95–06516	BOLT, HEXAGON W/W DEEP RECESS TORNILLO HEXAGONAL CON RONDONA	2	2	2			
20	688–44311–01	HOUSING, WATER PUMP CAJA BOMBA DE AGUA	1	1	1			
21	688–44322–41	INSERT, CARTRIDGE CARTUCHO	1	1	1			FOR CHROMATE FOR CHROMATE
22	688–44321–41	INNER PLATE, CARTRIDGE PLACA INTERIOR CARTUCHO	1	1	1			FOR CHROMATE FOR CHROMATE
23	688–44315–A0	GASKET, WATER PUMP EMPAQUE	1	1	1			
24	688–44352–03	IMPELLER IMPULSOR	1	1	1			
25	90280–04M04	KEY, WOODRUFF CUNA WOODRUFF	1	1	1			
26	6D8–44341–01–CA	HOUSING, WATER PUMP CAJA BOMBA DE AGUA	1	1	1			
27	93450–44166	CIRCLIP SEGURO	1	1	1			
28	93101–25M03	OIL SEAL SELLO ACEITE	2	2	2			
29	93210–46044	O-RING ANILLO O	1	1	1			
30	688–44316–A0	GASKET, WATER PUMP EMPAQUE	1	1	1			
31	688–44323–40	OUTER PLATE, CARTRIDGE PLACA EXTERIOR DEL CARTUCHO	1	1	1			FOR CHROMATE FOR CHROMATE
32	688–44324–A0	GASKET, CARTRIDGE EMPAQUE	1	1	1			
33	93604–10M03	PIN, DOWEL PASADOR DE CLAVIJA	2	2	2			
34	90119–08196	BOLT, WITH WASHER TORNILLO CON ARANDELA	2	2	2			
35	90119–08192	BOLT, WITH WASHER TORNILLO CON ARANDELA	2	2	2			
36	688–45501–11	DRIVE SHAFT COMP. EJE DE MANDO COMPL.	1	1	1			L(20.5") L(20.5")
	692–45501–21	DRIVE SHAFT COMP. EJE DE MANDO COMPL.	1					Y(22.5") Y(22.5")
	688–45501–22	DRIVE SHAFT COMP. EJE DE MANDO COMPL.	1		1			X(25.5") X(25.5")
37	688–45551–01	PINION (13T) PINON (13T)	1	1	1			
38	90170–16M01	NUT TUERCA	1	1	1			

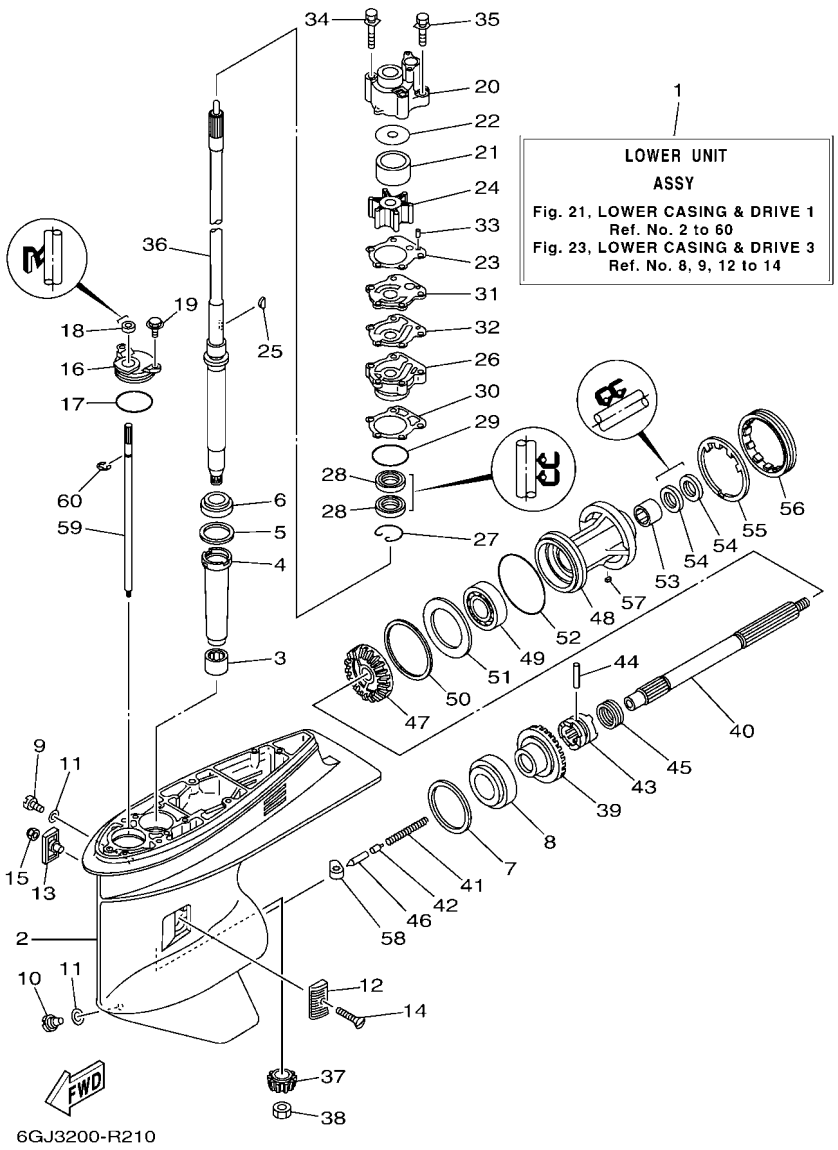

FIG. 21 LOWER CASING & DRIVE 1 — IMPULSOR E INFERIOR 1

REF. NO.	PART NO. CODIGO Nº	DESCRIPTION DESCRIPCION	MHD	ED	EHD			REMARKS OBSERVACIONES
39	688–45560–00	GEAR 1 (26T) ENGRANAJE 1 (26T)	1	1	1			
40	688–45611–00	SHAFT, PROPELLER EJE PROPUSOR	1	1	1			
41	90501–16233	SPRING, COMPRESSION RESORTE DE COMPRESION	1	1	1			
42	688–45634–00	SLIDE, SHIFT DESLIZADOR, CAMBIO	1	1	1			
43	688–45631–01	CLUTCH, DOG EMBRAGUE DE GARRA	1	1	1			
44	90250–07M02	PIN, STRAIGHT PASADOR CILINDRICO	1	1	1			
45	688–45633–00	RING, CROSS PIN ANILLO DE PASADOR	1	1	1			
46	688–45635–00	PLUNGER, SHIFT EMBOLO DE CAMBIO	1	1	1			
47	688–45571–01	GEAR 2 (26T) ENGRANAJE 2 (26T)	1	1	1			
48	688–45331–00–CA	HOUSING, BEARING CAJA DE COJINETE	1	1	1			
49	93306–207U0	BEARING COJINETE	1	1	1			
50	688–45577–01	SHIM (T:0.10MM) LAINA (T:0.10MM)	1	1	1			UR UR
	688–45577–10	SHIM (T:0.12MM) LAINA (:0.12MM)	1	1	1			UR UR
	688–45577–20	SHIM (T:0.15MM) LAINA (T:0.15MM)	1	1	1			UR UR
	688–45577–30	SHIM (T:0.18MM) LAINA (T:0.18MM)	1	1	1			UR UR
	688–45577–40	SHIM (T:0.30MM) LAINA (T:0.30MM)	1	1	1			UR UR
	688–45577–50	SHIM (T:0.40MM) LAINA (T:0.40MM)	1	1	1			UR UR
	688–45577–60	SHIM (T:0.50MM) LAINA (T:0.50MM)	1	1	1			UR UR
51	688–45576–00	WASHER, THRUST 2 ARANDELA DE EMPUJE AXIAL 2	1	1	1			
52	93210–85M97	O-RING ANILLO O	1	1	1			
53	93317–325U0	BEARING COJINETE	1	1	1			
54	93101–25M03	OIL SEAL SELLO ACEITE	2	2	2			
55	688–45383–02	WASHER, CLAW ARANDELA DE UNA	1	1	1			
56	688–45384–02	NUT TUERCA	1	1	1			
57	90282–04010	KEY, STRAIGHT CHAVETA, RECTA	1	1	1			
58	663–44151–00	CAM, SHIFT LEVA DE CAMBIO	1	1	1			
59	663–44144–01	ROD, SHIFT 2 VARILLA DE CAMBIO 2	1	1	1			

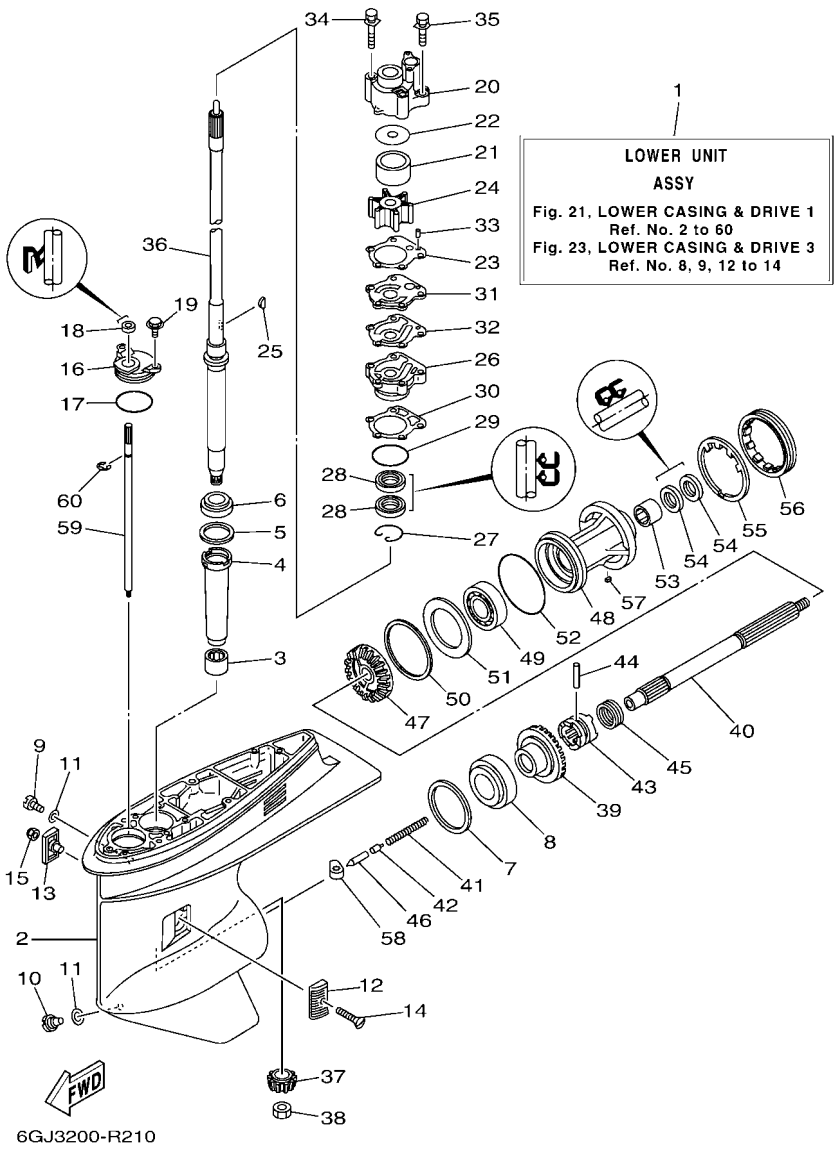

FIG. 21 LOWER CASING & DRIVE 1 — IMPULSOR E INFERIOR 1

REF. NO.	PART NO. CODIGO Nº	DESCRIPTION DESCRIPCION	MHD	ED	EHD			REMARKS OBSERVACIONES
60	99001–08600	CIRCLIP PRESILLA REDONDA	1	1	1			

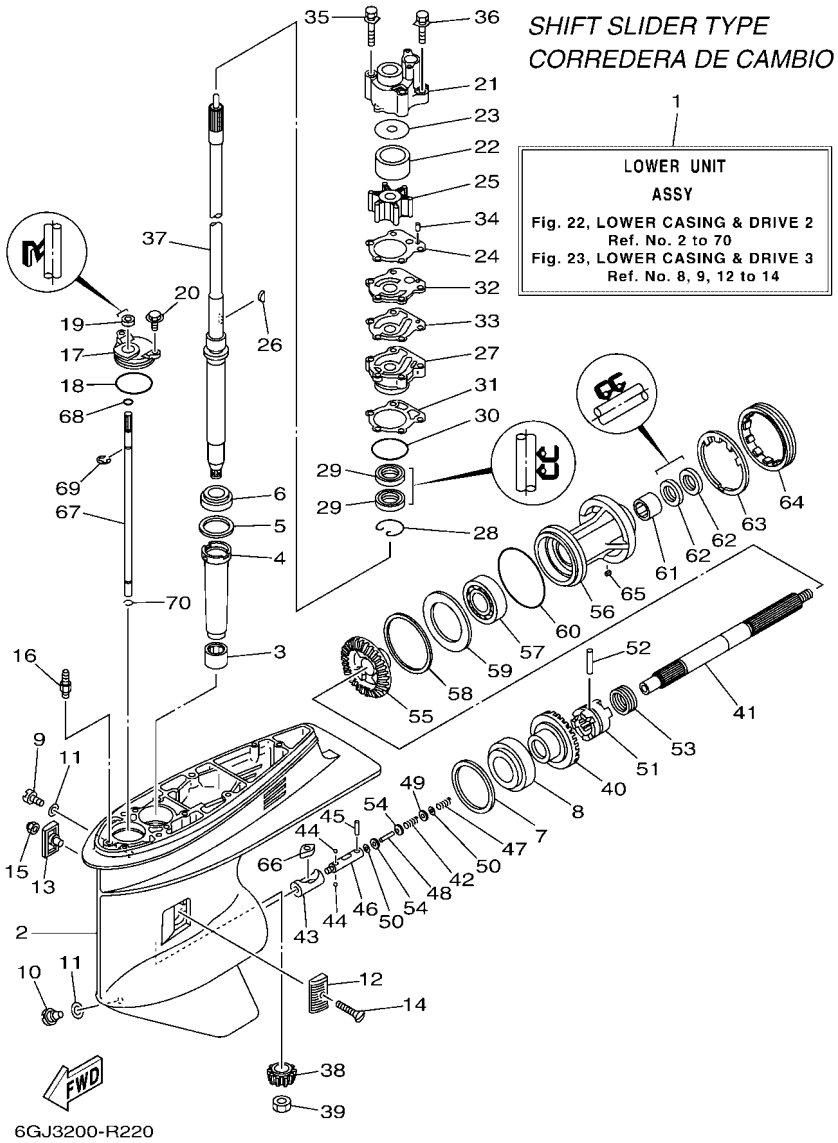

FIG. 22 LOWER CASING & DRIVE 2 — IMPULSOR E INFERIOR 2

REF. NO.	PART NO. CODIGO Nº	DESCRIPTION DESCRIPCION	MHD	ED	EHD			REMARKS OBSERVACIONES
1	692–45300–43–8D	LOWER UNIT ASSY CONJUNTO UNIDAD INFERIOR	1					L(20.5")-FOR MYS L(20.5")-FOR MYS
2	6H1–45301–03–8D	CASING, LOWER FUNDA INFERIOR COMPLETA	1					
3	93315–325V1	BEARING COJINETE DE RODILLOS	1					
4	688–45536–01	SLEEVE, DRIVE SHAFT CAMISA EJE DE MANDO	1					
5	688–45587–01	SHIM (T:0.10MM) LAINA (T:0.10MM)	1					UR UR
	688–45587–10	SHIM (T:0.12MM) LAINA (T:0.12MM)	1					UR UR
	688–45587–20	SHIM (T:0.15MM) LAINA (T:0.15MM)	1					UR UR
	688–45587–30	SHIM (T:0.18MM) LAINA (T:0.18MM)	1					UR UR
	688–45587–40	SHIM (T:0.30MM) LAINA (T:0.30MM)	1					UR UR
	688–45587–50	SHIM (T:0.40MM) LAINA (T:0.40MM)	1					UR UR
	688–45587–60	SHIM (T:0.50MM) LAINA (T:0.50MM)	1					UR UR
6	93332–000U3	BEARING COJINETE	1					
7	688–45567–01	SHIM (T:0.10MM) LAINA (T:0.10MM)	1					UR UR
	688–45567–10	SHIM (T:0.12MM) LAINA (T:0.12MM)	1					UR UR
	688–45567–20	SHIM (T:0.15MM) LAINA (T:0.15MM)	1					UR UR
	688–45567–30	SHIM (T:0.18MM) LAINA (T:0.18MM)	1					UR UR
	688–45567–40	SHIM (T:0.30MM) LAINA (T:0.30MM)	1					UR UR
	688–45567–50	SHIM (T:0.40MM) LAINA (T:0.40MM)	1					UR UR
	688–45567–60	SHIM (T:0.50MM) LAINA (T:0.50MM)	1					UR UR
8	93332–000W7	BEARING COJINETE	1					
9	90340–08002	PLUG, STRAIGHT SCREW TORNILLO, DE DRENAJE	1					
10	688–45341–10	PLUG, DRAIN TAPON, DREN	1					
11	90430–08003	GASKET JUNTA	2					
12	6H1–45214–00	COVER, WATER INLET 1 CUBIERTA, ENTRADA AGUA 1	1					
13	6H1–45215–00	COVER, WATER INLET 2 CUBIERTA, ENTRADA AGUA 2	1					
14	90151–05M00	SCREW, COUNTERSUNK TORNILLO EMBUTIDO	1					
15	90185–05002	NUT, NYLON TUERCA AUTOBLOCANTE	1					

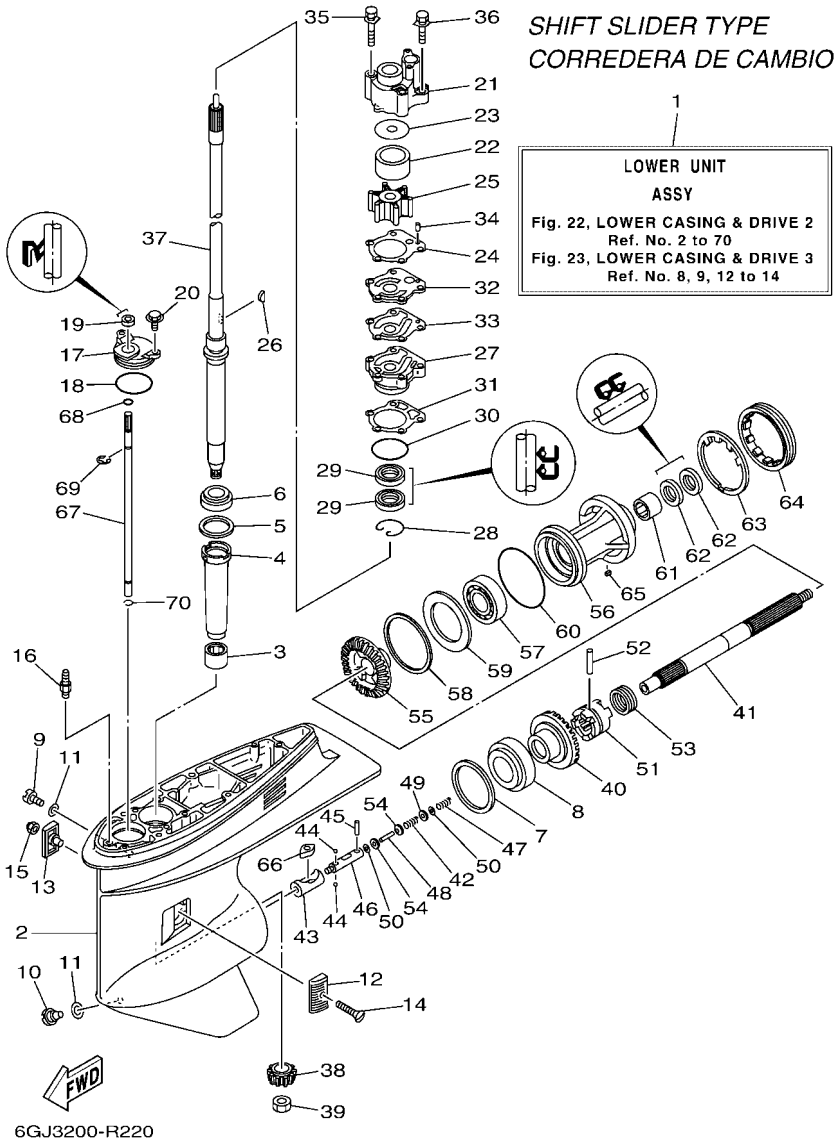

FIG. 22 LOWER CASING & DRIVE 2 — IMPULSOR E INFERIOR 2

REF. NO.	PART NO. CODIGO Nº	DESCRIPTION DESCRIPCION	MHD	ED	EHD			REMARKS OBSERVACIONES
16	6J8–45378–00	NIPPLE, HOSE (PLUG) NIPLE MANGUERA (TAPON)	1					
17	688–45321–00	PLATE PLACA	1					
18	93210–49046	O-RING ANILLO O	1					
19	93106–09014	OIL SEAL SELLO ACEITE	1					
20	97E95–06516	BOLT, HEXAGON W/W DEEP RECESS TORNILLO HEXAGONAL CON RONDONA	2					
21	688–44311–01	HOUSING, WATER PUMP CAJA BOMBA DE AGUA	1					
22	688–44322–41	INSERT, CARTRIDGE CARTUCHO	1					FOR CHROMATE FOR CHROMATE
23	688–44321–41	INNER PLATE, CARTRIDGE PLACA INTERIOR CARTUCHO	1					FOR CHROMATE FOR CHROMATE
24	688–44315–A0	GASKET, WATER PUMP EMPAQUE	1					
25	688–44352–03	IMPELLER IMPULSOR	1					
26	90280–04M04	KEY, WOODRUFF CUNA WOODRUFF	1					
27	6D8–44341–01–CA	HOUSING, WATER PUMP CAJA BOMBA DE AGUA	1					
28	93450–44166	CIRCLIP SEGURO	1					
29	93101–25M03	OIL SEAL SELLO ACEITE	2					
30	93210–46044	O-RING ANILLO O	1					
31	688–44316–A0	GASKET, WATER PUMP EMPAQUE	1					
32	688–44323–40	OUTER PLATE, CARTRIDGE PLACA EXTERIOR DEL CARTUCHO	1					FOR CHROMATE FOR CHROMATE
33	688–44324–A0	GASKET, CARTRIDGE EMPAQUE	1					
34	93604–10M03	PIN, DOWEL PASADOR DE CLAVIJA	2					
35	90119–08196	BOLT, WITH WASHER TORNILLO CON ARANDELA	2					
36	90119–08192	BOLT, WITH WASHER TORNILLO CON ARANDELA	2					
37	688–45501–11	DRIVE SHAFT COMP. EJE DE MANDO COMPL.	1					L(20.5") L(20.5")
38	688–45551–01	PINION (13T) PINON (13T)	1					
39	90170–16M01	NUT TUERCA	1					
40	688–45560–00	GEAR 1 (26T) ENGRANAJE 1 (26T)	1					
41	6H1–45611–01	SHAFT, PROPELLER EJE PROPUSOR	1					
42	90501–12M48	SPRING, COMPRESSION RESORTE DE COMPRESION	1					

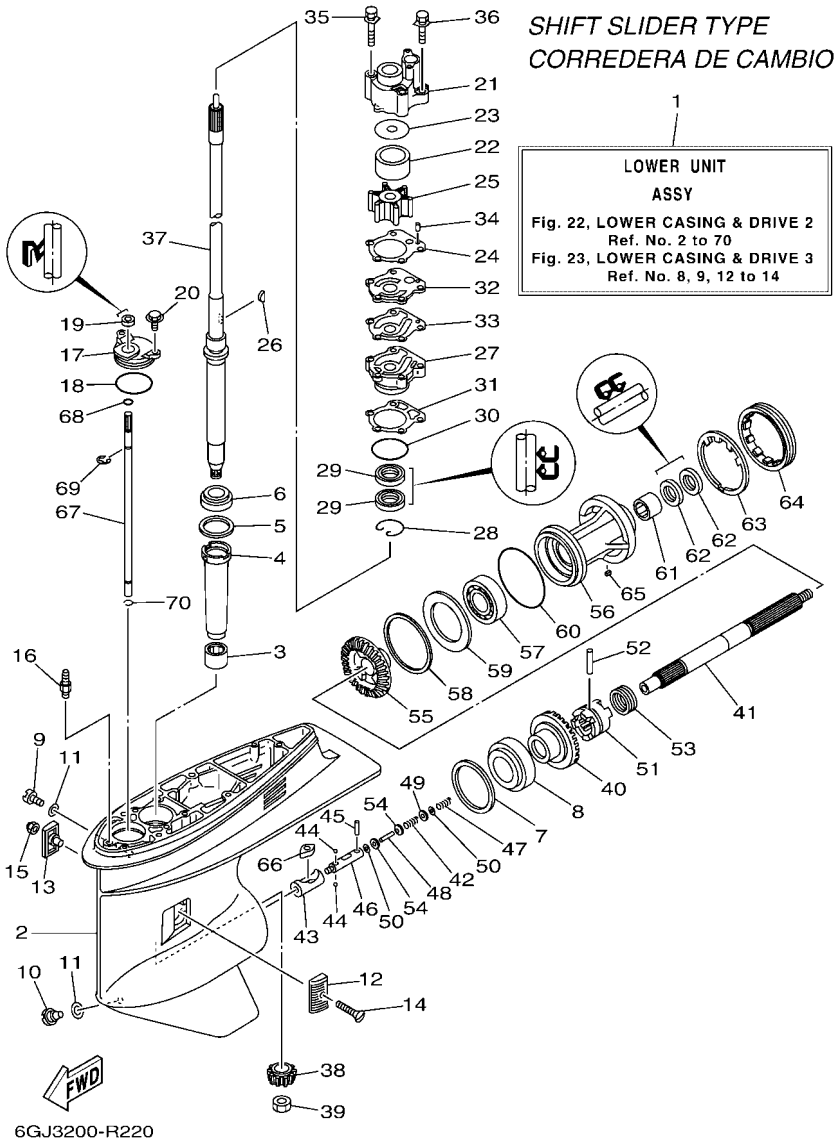

FIG. 22 LOWER CASING & DRIVE 2 — IMPULSOR E INFERIOR 2

REF. NO.	PART NO. CODIGO Nº	DESCRIPTION DESCRIPCION	MHD	ED	EHD			REMARKS OBSERVACIONES
43	6H1–45641–01	SHIFTER CAMBIO	1					
44	93503–16003	BALL ESFERA	2					
45	93603–12M11	PIN, DOWEL PASADOR DE CLAVIJA	1					
46	6H1–45634–02	SLIDE, SHIFT DESLIZADOR, CAMBIO	1					
47	90501–16M65	SPRING, COMPRESSION RESORTE DE COMPRESION	1					
48	6H1–45668–00	SHAFT, FREE 1 EJE 1	1					
49	90201–03313	WASHER, PLATE ARANDELA PLANA	1					
50	90183–02M03	NUT, SPRING TUERCA DE RESORTE	2					
51	6H1–45631–01	CLUTCH, DOG EMBRAGUE DE GARRA	1					
52	90250–07M02	PIN, STRAIGHT PASADOR CILINDRICO	1					
53	688–45633–00	RING, CROSS PIN ANILLO DE PASADOR	1					
54	6H1–45635–00	PLUNGER, SHIFT EMBOLO DE CAMBIO	2					
55	6H1–45571–00	GEAR 2 (26T) ENGRANAJE 2 (26T)	1					
56	688–45331–00–CA	HOUSING, BEARING CAJA DE COJINETE	1					
57	93306–207U0	BEARING COJINETE	1					
58	688–45577–01	SHIM (T:0.10MM) LAINA (T:0.10MM)	1					UR UR
	688–45577–10	SHIM (T:0.12MM) LAINA (:0.12MM)	1					UR UR
	688–45577–20	SHIM (T:0.15MM) LAINA (T:0.15MM)	1					UR UR
	688–45577–30	SHIM (T:0.18MM) LAINA (T:0.18MM)	1					UR UR
	688–45577–40	SHIM (T:0.30MM) LAINA (T:0.30MM)	1					UR UR
	688–45577–50	SHIM (T:0.40MM) LAINA (T:0.40MM)	1					UR UR
	688–45577–60	SHIM (T:0.50MM) LAINA (T:0.50MM)	1					UR UR
59	688–45576–00	WASHER, THRUST 2 ARANDELA DE EMPUJE AXIAL 2	1					
60	93210–85M97	O-RING ANILLO O	1					
61	93317–325U0	BEARING COJINETE	1					
62	93101–25M03	OIL SEAL SELLO ACEITE	2					
63	688–45383–02	WASHER, CLAW ARANDELA DE UNA	1					

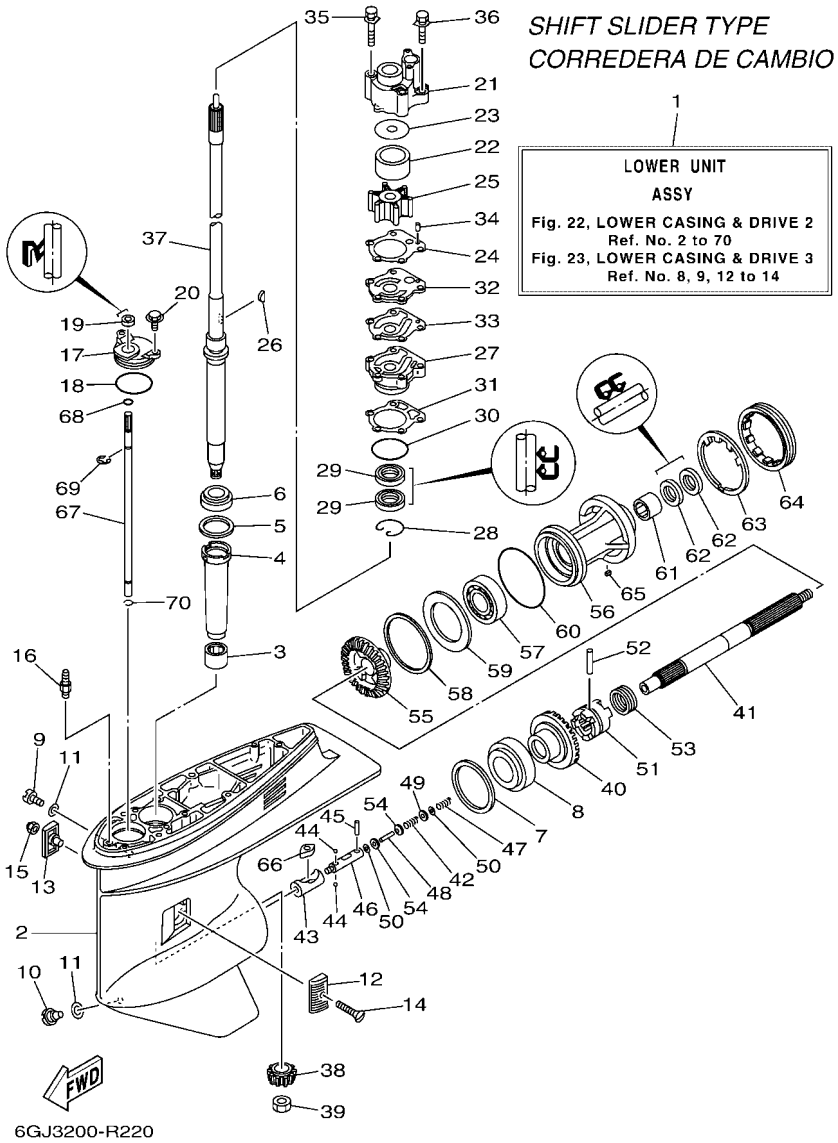

FIG. 22 LOWER CASING & DRIVE 2 — IMPULSOR E INFERIOR 2

REF. NO.	PART NO. CODIGO Nº	DESCRIPTION DESCRIPCION	MHD	ED	EHD			REMARKS OBSERVACIONES
64	688–45384–02	NUT TUERCA	1					
65	90282–04010	KEY, STRAIGHT CHAVETA, RECTA	1					
66	6H1–44151–00	CAM, SHIFT LEVA DE CAMBIO	1					
67	6H1–44144–00	ROD, SHIFT 2 VARILLA DE CAMBIO 2	1					
68	93210–07003	O-RING ANILLO O	1					
69	99001–08600	CIRCLIP PRESILLA REDONDA	1					
70	93450–07M00	CIRCLIP SEGURO	1					

FIG. 23 LOWER CASING & DRIVE 3 — IMPULSOR E INFERIOR 3

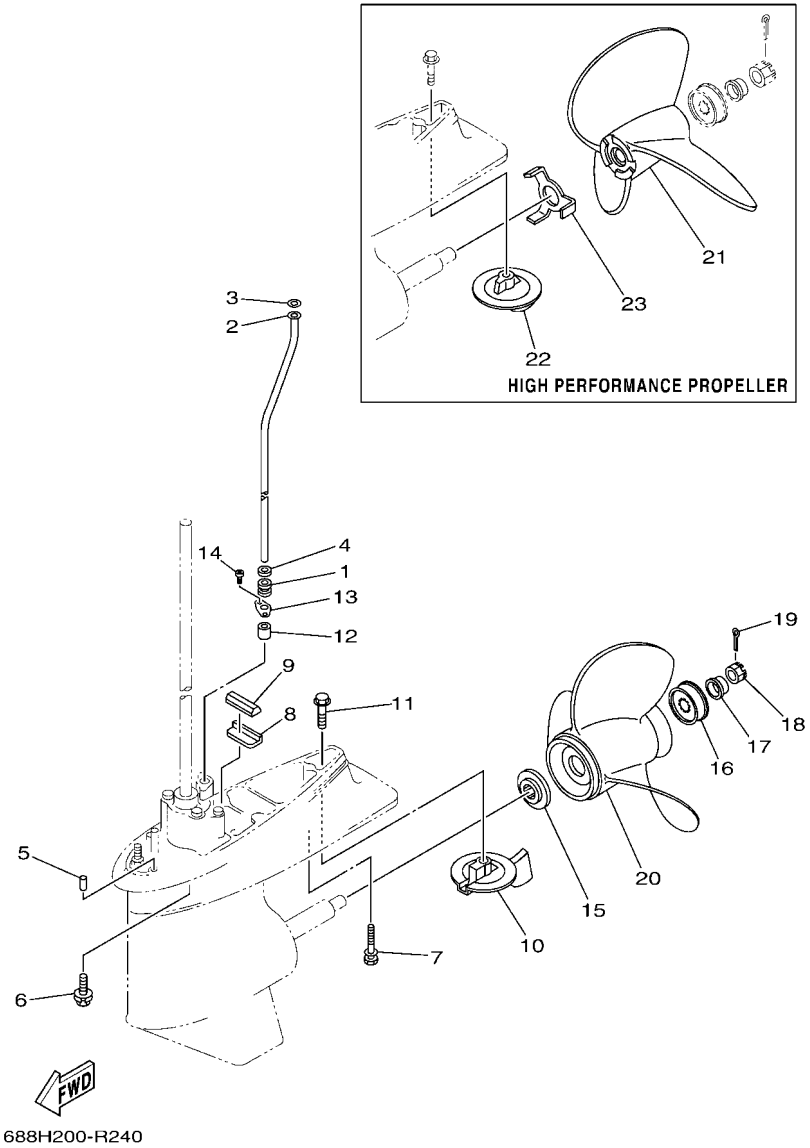

REF. NO.	PART NO. CODIGO Nº	DESCRIPTION DESCRIPCION	MHD	ED	EHD			REMARKS OBSERVACIONES
1	663–44367–01	DAMPER, WATER SEAL 3 GOMA DEL SELLO DE AGUA 3	1	1	1			
2	688–44361–11	TUBE, WATER 1 TUBO DE AGUA 1	1	1	1			L(20.5") L(20.5")
	692–44361–20	TUBE, WATER 1 TUBO DE AGUA 1	1					Y(22.5") Y(22.5")
	688–44361–21	TUBE, WATER 1 TUBO DE AGUA 1	1		1			X(25.5") X(25.5")
3	90202–12060	WASHER, PLATE ARANDELA DE PLANA	1	1	1			
4	90430–12072	GASKET JUNTA	1	1	1			
5	93606–12019	PIN, DOWEL PASADOR DE CLAVIJA	2	2	2			L(20.5") L(20.5")
6	97E75–10640	BOLT, HEXAGON W/W DEEP RECESS TORNILLO HEXAGONAL CON RONDONA	4	4	4			L(20.5") L(20.5")
7	97E75–08560	BOLT, HEXAGON W/W DEEP RECESS TORNILLO HEXAGONAL CON RONDONA	1	1	1			L(20.5") L(20.5")
8	663–45376–00	GUIDE, SEAL DAMPER GUIA DE SELLO GOMA	1	1	1			
9	688–45375–00	DAMPER, SEAL GOMA DE SELLO	1	1	1			
10	67F–45371–00	TAB-TRIM QUILLA ESTABILIZADOR	1	1	1			
11	90105–10M67	BOLT, FLANGE TORNILLO	1	1	1			
12	663–44366–01	DAMPER, WATER SEAL 2 GOMA DEL SELLO DE AGUA 2	1	1	1			
13	90480–19M06	GROMMET TAPON	1	1	1			
14	90160–04006	SCREW, ROUND TAPPING TORNILLO REDONDO ROSCA HEMBRA	2	2	2			
15	688–45987–01	SPACER 1 ESPACIADOR 1	1	1	1			
16	67F–45997–00	SPACER 2 ESPACIADOR 2	1	1	1			
17	90389–25M00	BUSH BUJE	1	1	1			
18	90171–16011	NUT, CASTLE TUERCA ENTALLADA	1	1	1			
19	91490–30025	PIN. COTTER CHAVETA	1	1	1			
20	6E5–45954–00	PROPELLER (3X14"X11"-K) PROPELA (3X14"X11"-K)	1	1	1			UR UR
	6E5–45949–00	PROPELLER (3X13-5/8"X13"-K) PROPELA (3X13-5/8"X13"-K)	1	1	1			UR UR
	6E5–45947–00	PROPELLER (3X13-1/2"X15"-K) PROPELA (3X13-1/2"X15"-K)	1	1	1			UR UR
	6E5–45945–01	PROPELLER (3X13-1/4"X17"-K) PROPELA (3X13-1/4"X17"-K)	1	1	1			UR UR
	6E5–45941–00	PROPELLER (3X13"X19"-K) PROPELA (3X13"X19"-K)	1	1	1			UR UR
	6E5–45943–00	PROPELLER (3X12-5/8"X21"-K) PROPELA (3X12-5/8"X21"-K)	1	1	1			UR UR

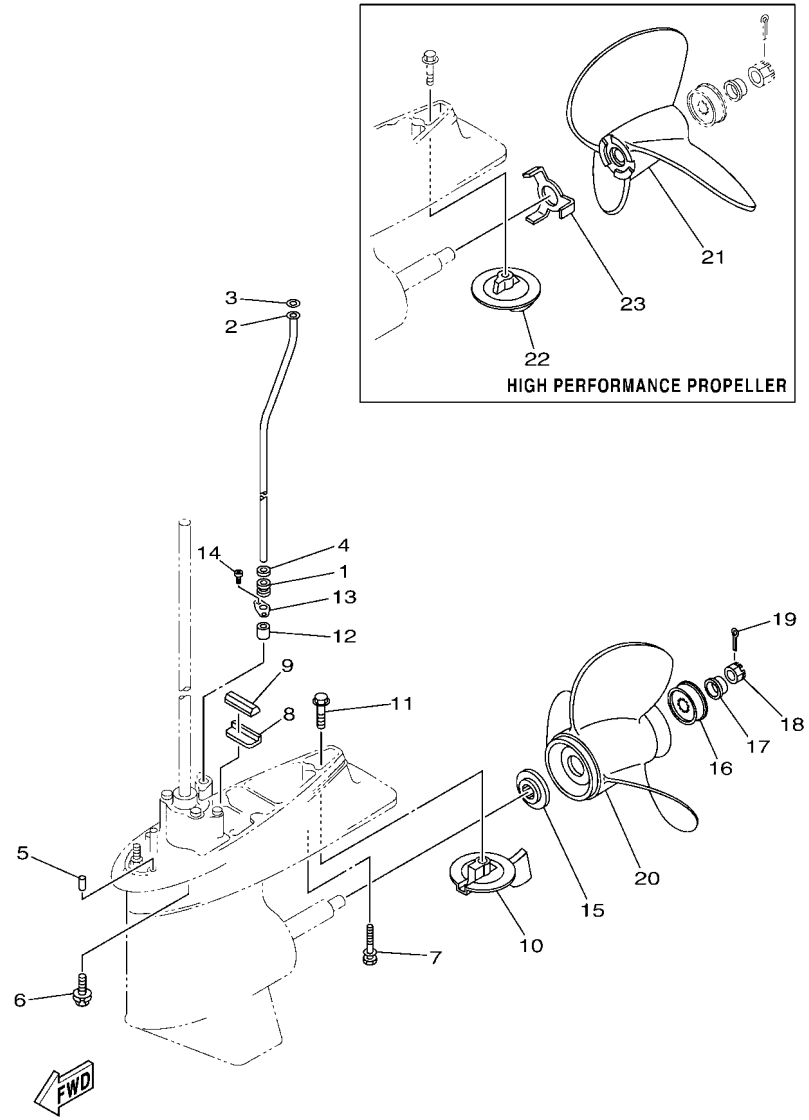

FIG. 23 LOWER CASING & DRIVE 3 — IMPULSOR E INFERIOR 3

REF. NO.	PART NO. CODIGO Nº	DESCRIPTION DESCRIPCION	MHD	ED	EHD			REMARKS OBSERVACIONES
20	6E5–45952–00	PROPELLER (3X13"X23"-K) PROPELA (3X13"X23"-K)	1	1	1			UR UR
	688–45932–60	PROPELLER (3X13-1/2"X14"-K) PROPELA (3X13-1/2"X14"-K)	1	1	1			UR UR
	688–45978–60	PROPELLER (3X13-1/2"X16"-K) PROPELA (3X13-1/2"X16"-K)	1	1	1			UR UR
	688–45930–02	PROPELLER (3X13"X17"-K2) PROPELA (3X13"X17"-K2)	1	1	1			UR UR
	688–45970–03	PROPELLER (3X13"X19"-K) PROPELA (3X13"X19"-K)	1	1	1			UR UR
	688–45972–02	PROPELLER (3X13"X21"-K) PROPELA (3X13"X21"-K)	1	1	1			UR UR
	688–45974–02	PROPELLER (3X13"X23"-K) PROPELA (3X13"X23"-K)	1	1	1			UR UR
	688–45976–01	PROPELLER (3X13"X25"-K) PROPELA (3X13"X25"-K)	1	1	1			UR UR
21	6E5–45970–10	PROPELLER (3X14"X20"-P) PROPELA (3X14"X20"-P)	1	1	1			UR UR
	6E5–45976–10	PROPELLER (3X14"X22"-P) PROPELA (3X14"X22"-P)	1	1	1			UR UR
	6E5–45972–10	PROPELLER (3X14"X24"-P) PROPELA (3X14"X24"-P)	1	1	1			UR UR
	6E5–45978–10	PROPELLER (3X14"X26"-P) PROPELA (3X14"X26"-P)	1	1	1			UR UR
	6E5–45974–10	PROPELLER (3X14"X28"-P) PROPELA (3X14"X28"-P)	1	1	1			UR UR
22	6E5–45371–10	TAB-TRIM QUILLA ESTABILIZADOR	1	1	1			
23	6E5–45994–10	PLATE, TOOTH PLACA	1	1	1			

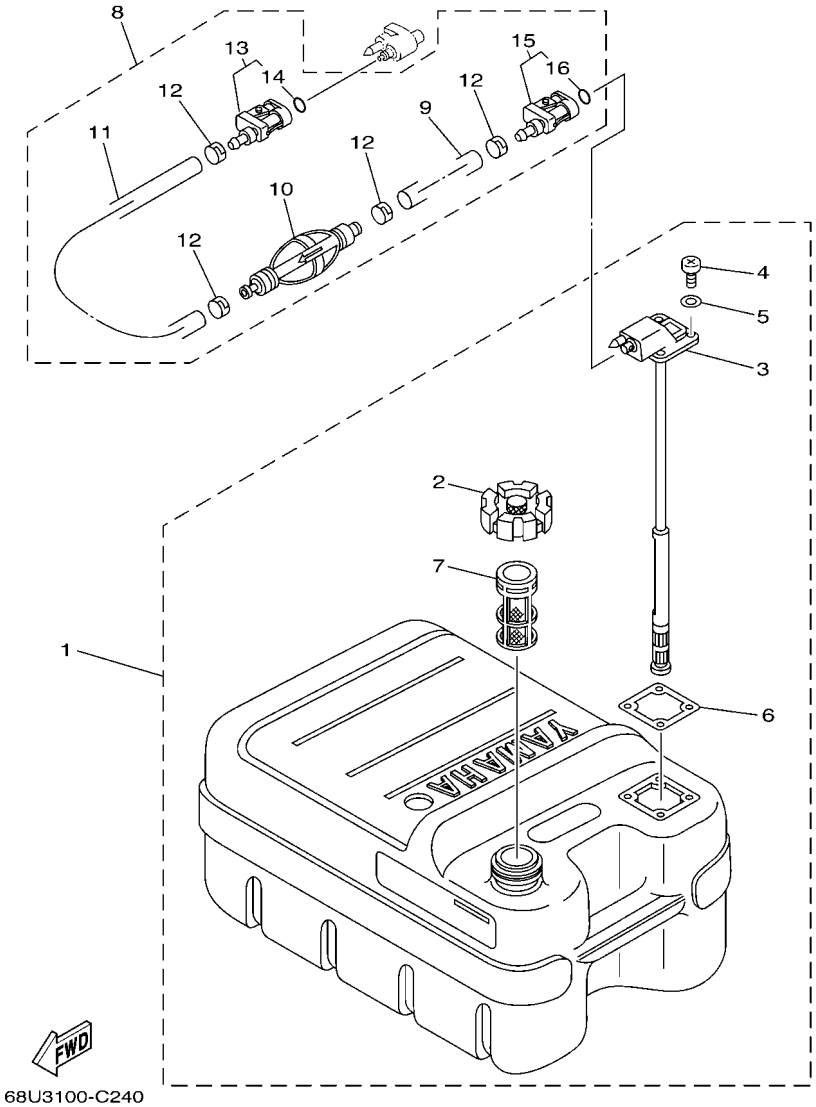

FIG. 24 FUEL TANK — DEPOSITO DE COMBUSTIBLE

REF. NO.	PART NO. CODIGO Nº	DESCRIPTION DESCRIPCION	MHD	ED	EHD			REMARKS OBSERVACIONES
1	6YJ–24201–21	FUEL TANK ASSY (24L) TANQUE DEL COMBUSTIBLE (24L)	1	1	1			AP AP
2	6YJ–24610–01	.CAP ASSY .TAPA COMPLETA	1	1	1			
3	6YJ–24260–11	.FUEL METER ASSY .MEDIDOR DE COMBUSTIBLE COMPL.	1	1	1			
4	90157–05M19	.SCREW, PAN HEAD .TORNILLO CABEZA CONICA PLANA	4	4	4			
5	6Y1–24329–00	.SEAL .SELLO	4	4	4			
6	6Y1–24268–01	.GASKET, FUEL METER .EMPAQ MEDIDOR DE COMBUSTIBLE	1	1	1			
7	6YJ–24167–00	.STRAINER .COLADOR	1	1	1			
8	61J–24306–05	FUEL PIPE COMP. 1 TUBO COMBUST. COMPL 1	1	1	1			AP AP
9	90445–11M58	.HOSE (L2050) .MANGUERA (L2050)	1	1	1			
10	61J–24360–00	.PRIMER PUMP ASSY .SOPORTE BOMBA	1	1	1			
11	90445–11M57	.HOSE (L850) .TUBO (L850)	1	1	1			
12	650–24351–51	.BAND 1 .ABRAZADERA 1	4	4	4			
13	6G1–24305–05	.FUEL PIPE JOINT COMP. 2 .CONECTOR MANGUERA COMBUST. 2	1	1	1			
14	93210–08287	..O-RING ..ANILLO O	1	1	1			
15	6Y1–24305–06	.FUEL PIPE JOINT COMP. 2 .CONECTOR MANGUERA COMBUST. 2	1	1	1			
16	93210–08287	..O-RING ..ANILLO O	1	1	1			

FIG. 25 REMOTE CONTROL BOX — CONTROL REMOTO COMPLETO

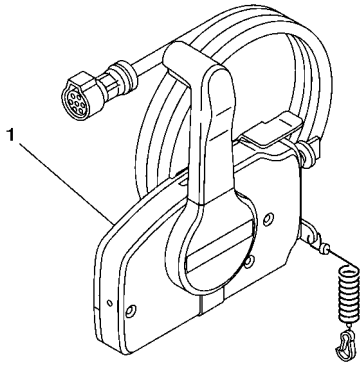

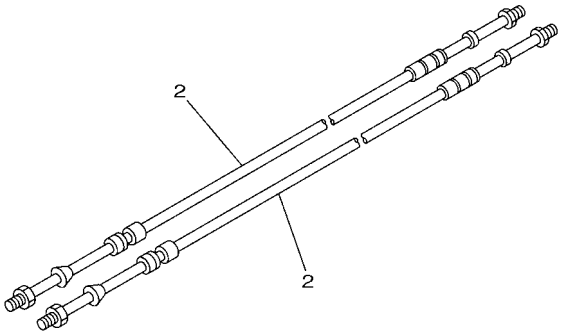

6DR3300-P300

REF. NO.	PART NO. CODIGO Nº	DESCRIPTION DESCRIPCION	MHD	ED	EHD			REMARKS OBSERVACIONES
1	703–48203–24	REMOTE CONTROL ASSY (7P) REMOTO CONTROL COMPL. (7P)		1				AP WITHOUT PT/T SW. AP WITHOUT PT/T SW.
2	701–48320–80	CABLE, REMOTE CONTROL L=17F CABLE CONTROL REMOTO L=17F		2				

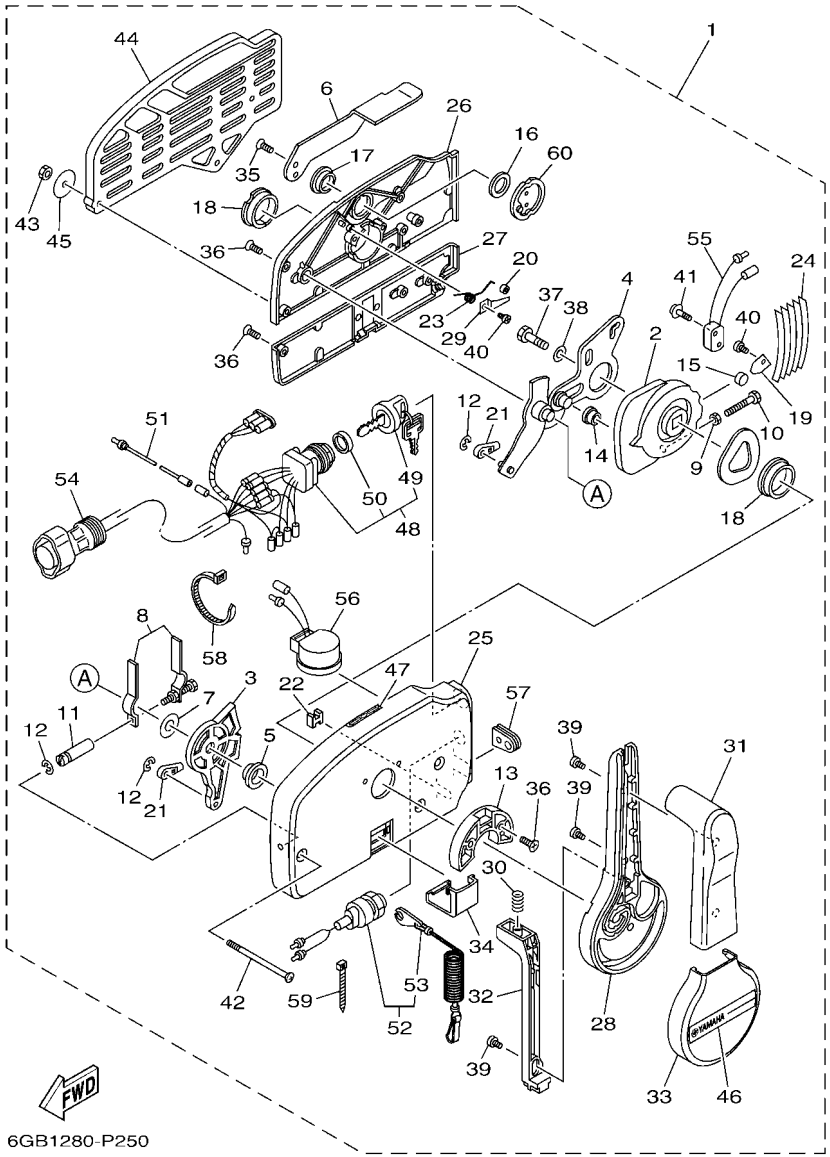

FIG. 26 REMOTE CONTROL ASSY — CONTROL REMOTO COMPL

REF. NO.	PART NO. CODIGO Nº	DESCRIPTION DESCRIPCION	MHD	ED	EHD			REMARKS OBSERVACIONES
1	703–48203–24	REMOTE CONTROL ASSY (7P) REMOTO CONTROL COMPL. (7P)		1				AP WITHOUT PT/T SW. AP WITHOUT PT/T SW.
2	703–48232–00	.GEAR .ENGRANAJE 1		1				
3	703–48271–00	.ARM, SHIFT .BRAZO CAMBIADOR		1				
4	703–48261–01	.ARM, THROTTLE .BRAZO ACELERADOR		1				
5	703–48235–00	.BUSHING .BUJE		1				
6	703–48152–10	.KNOB, FREE ACCEL. .PERILLA		1				
7	703–48268–00	.SPACER .ESPACIADOR 3		1				
8	703–48264–00	.FRICTION, THROTTLE .FRICCION DE ACELERADOR		1				
9	95380–05600	.NUT .TUERCA		1				
10	97380–05025	.BOLT .TORNILLO HEXAGONAL		1				
11	703–48265–10	.SHAFT, FRICTION .EJE FRICCION		1				
12	93430–06024	.CIRCLIP .SEGURO		3				
13	703–48245–00	.PLATE, LOCK .PLACA CERRADURA		1				
14	703–48252–00	.ROLLER, CAM .RODILLO LEVA		1				
15	701–48248–00	.ROLLER, FREE ACCEL. .RODILLO ACELERADOR LIBRE		1				
16	703–48198–00	.WASHER, WAVE .RONDANA ONDULADA 3		1				
17	703–48243–00	.BUSHING .BUJE 3		1				
18	703–48236–00	.BUSHING 1 .BUJE		2				
19	703–48189–00	.RETAINER .RETENEDOR		1				
20	703–48234–00	.ROLLER, DETENT .RODILLO		1				
21	703–48345–01	.CABLE END, REMOTE CONTROL 2 .TERMINAL CABLE DE CONTROL REMO		2				
22	703–48358–01	.ANCHOR, CABLE .ABRAZADERA CABLE		1				
23	703–48244–00	.SPRING, FREE ACCEL. .RESORTE ACELERADOR LIBRE		1				
24	703–48238–00	.SPRING, DETENT .RESORTE		5				
25	703–48211–10	.HOUSING,1 .CAJA		1				
26	703–48212–10	.BACK PLATE 1 .PLACA TRASERA 1		1				
27	703–48213–10	.BACK PLATE 2 .PLACA TRASERA 2		1				

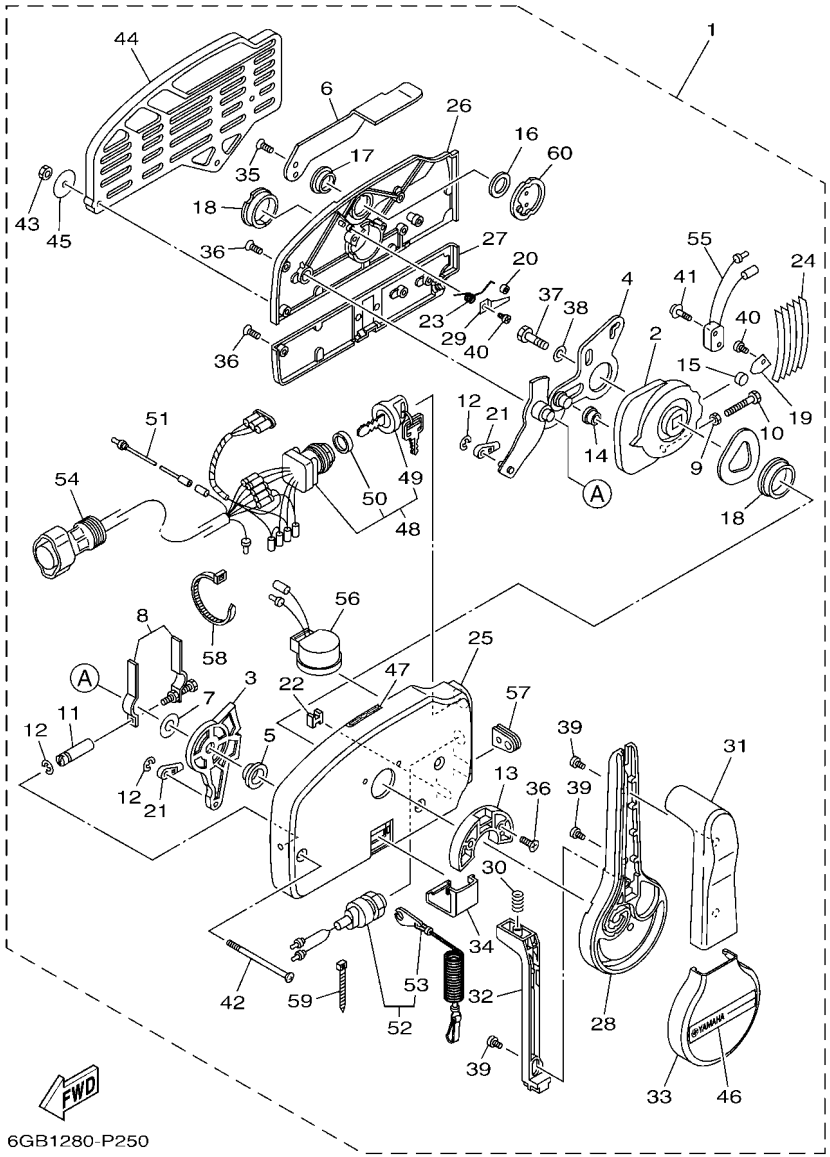

FIG. 26 REMOTE CONTROL ASSY — CONTROL REMOTO COMPL

REF. NO.	PART NO. CODIGO Nº	DESCRIPTION DESCRIPCION	MHD	ED	EHD			REMARKS OBSERVACIONES
28	703–48221–10	.LEVER, CONTROL .PALANCA CONTROL		1				
29	703–48246–00	.SPACER .ESPACIADOR		1				
30	703–48227–00	.SPRING, NEUTRAL LOCK .RESORTE DE SEGURO		1				
31	703–48222–30	.GRIP, CONTROL LEVER .MANGO DE PALANCA CONTROL		1				SINGLE SINGLE
32	703–48223–10	.LOCK, NEUTRAL .CERRADURA NEUTRO		1				
33	703–48225–10	.COVER .CUBIERTA		1				
34	703–48219–10	.COVER, LEAD .CUBIERTA		1				
35	703–48281–00	.SCREW .TORNILLO 1		2				
36	703–44189–20	.SCREW .TORNILLO		7				
37	97380–08030	.BOLT .TORNILLO HEXAGONAL		1				
38	92990–08600	.WASHER, PLATE .ARANDELA PLANA		1				
39	703–48128–10	.SCREW 2 .TORNILLO 2		3				
40	98580–04006	.SCREW, PAN HEAD .TORNILLO DE CABEZA CRUZADA		2				
41	703–48129–00	.SCREW 3 .TORNILLO 3		2				
42	703–44189–30	.SCREW .TORNILLO		3				
43	95380–06600	.NUT, HEXAGON .TUERCA		3				
44	703–48293–11	.SPACER, REMOTE CONTROL .ESPACIADOR		1				SINGLE SINGLE
45	701–48287–00	.WASHER .ARANDELA		3				
46	703–48215–11	.GRAPHIC .CALCOMANIA 1		1				
47	6X3–44191–00	.INDICATOR, SHIFT .INDICADOR DE CAMBIOS		1				
48	703–82510–34	.MAIN SWITCH ASSY .CONJUNTO DE LLAVE IGNICION		1				
49	703–82577–00	..CAP, KEY ..TAPA		1				
50	6K1–82532–00	..CAP ..TAPA		1				
51	703–82531–00	.WIRE, LEAD (L70) .CABLE CONDUCTOR (L70)		1				
52	688–82575–02	.ENGINE STOP SWITCH ASSY .INTERRUPTOR DE PARADA COMPL		1				
53	682–82556–00	..LANYARD, STOP SWITCH ..CORDON DE INTERRUPTOR PARADA		1				
54	688–82586–21	.EXTENSION, WIRE HARNESS (4.9M) .EXTENSION, ARNES DE CABLES (4.		1				(7P) (7P)

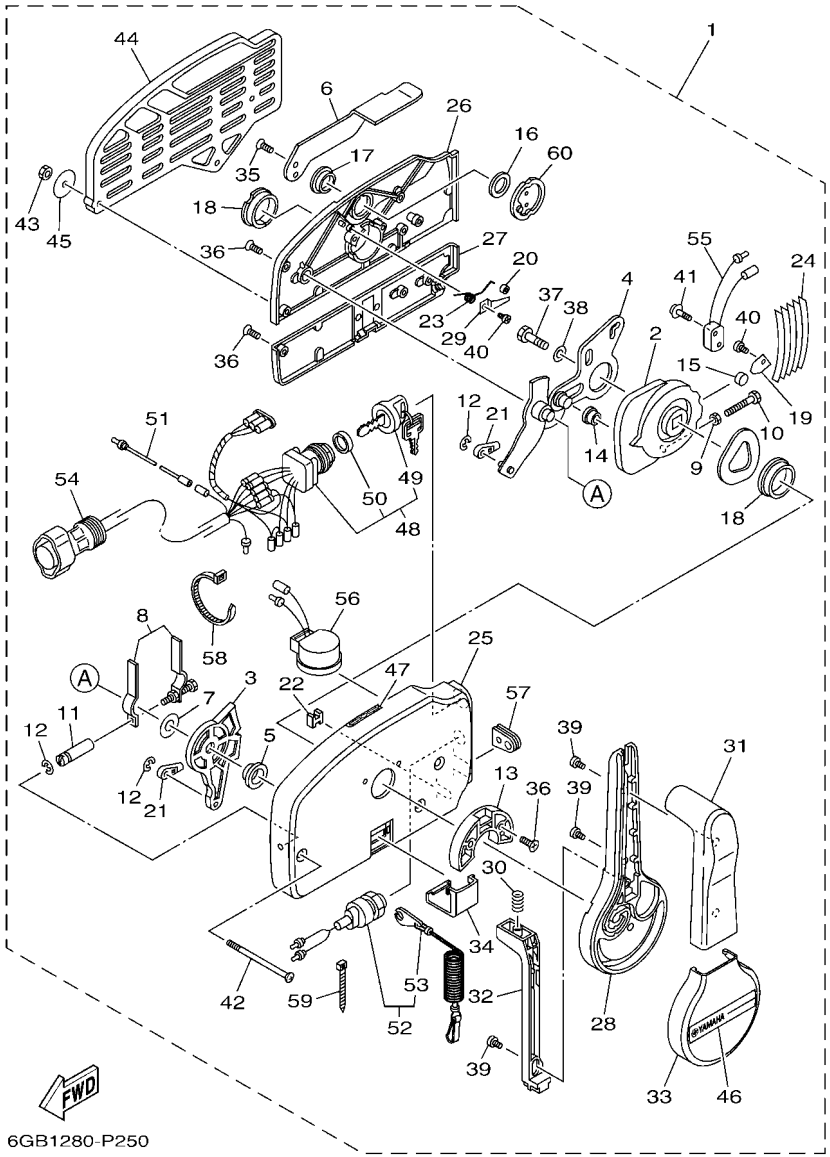

FIG. 26 REMOTE CONTROL ASSY — CONTROL REMOTO COMPL

REF. NO.	PART NO. CODIGO Nº	DESCRIPTION DESCRIPCION	MHD	ED	EHD			REMARKS OBSERVACIONES
55	703–82540–00	.NEUTRAL SWITCH ASSY .INTERRUPTOR NEUTRAL COMPL		1				
56	703–83383–11	.BUZZER .ZUMBADOR		1				
57	703–48284–00	.GROMMET .TAPON		1				
58	703–82591–00	.BAND .BANDA		1				
59	703–82592–00	.BAND .BANDA		1				
60	703–48153–00	.SHAFT, FREE ACCEL. .EJE		1				

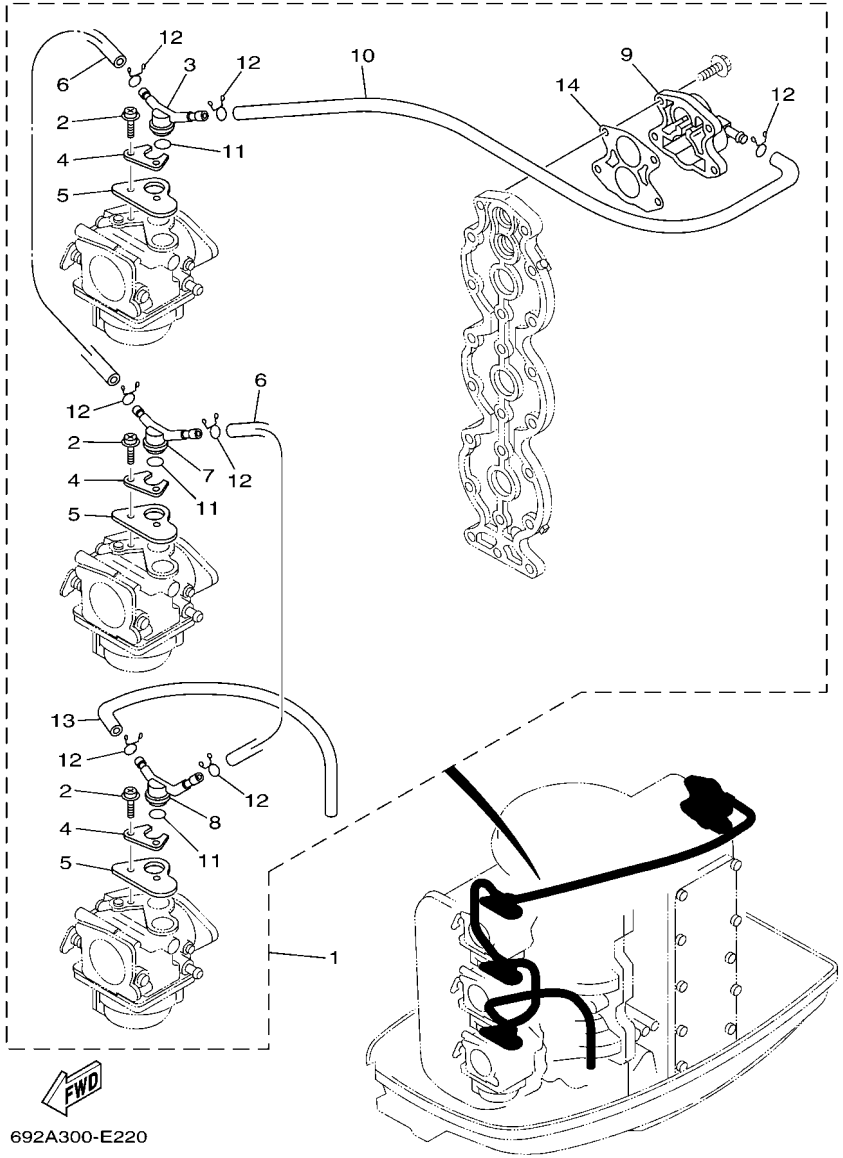

FIG. 27 OPTIONAL PARTS — PARTES OPCIONALES

REF. NO.	PART NO. CODIGO Nº	DESCRIPTION DESCRIPCION	MHD	ED	EHD			REMARKS OBSERVACIONES
1	688–12440–51	HEAT EXCHANGER ASSY INTERCAMBIADOR DE CALOR COMPL	1	1	1			
2	97980–05114	.SCREW, WITH WASHER .TORNILLO, CON ARANDELA	6	6	6			
3	6H1–14969–50	.CAP .TAPA	1	1	1			
4	6H1–14945–50	.PLATE .PLACA	3	3	3			
5	6H1–14572–50	.PLATE, STAY .PLACA DE SOPORTE	3	3	3			
6	90445–11M01	.HOSE (L180) .TUBO (L180)	2	2	2			
7	6H1–14169–50	.CAP .FUNDA	1	1	1			
8	6H1–14968–50	.CAP .TAPA	1	1	1			
9	6H1–12413–50	.COVER, THERMOSTAT .CUBIERTA TERMOSTATO	1	1	1			
10	6H1–14348–51	.PIPE 1 .MANGUERA	1	1	1			
11	93210–15M52	.O-RING .ANILLO O	3	3	3			
12	90467–10M04	.CLIP .PRESILLA	7	7	7			
13	6E5–12481–00	.PIPE 1 .TUBO 1	1	1	1			
14	6H1–12414–50	.GASKET, COVER .EMPAQUE	1	1	1			

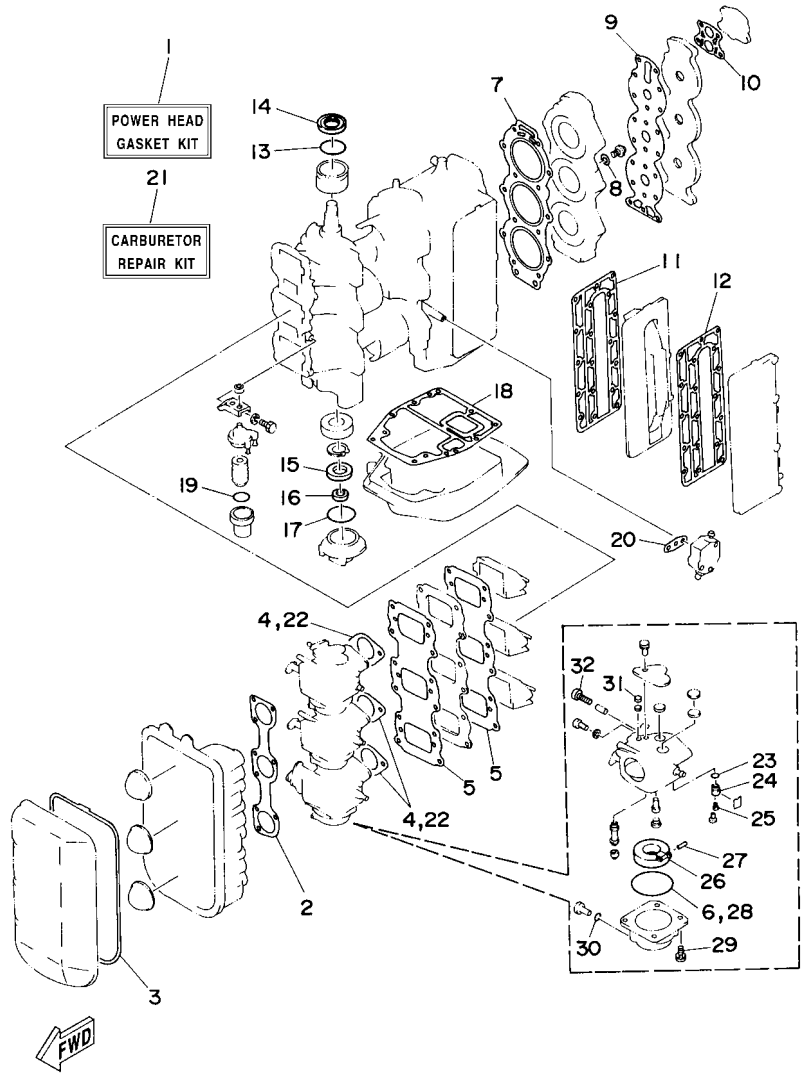

FIG. 28 REPAIR KIT 1 — ESTUCHE REPARATION 1

REF. NO.	PART NO. CODIGO Nº	DESCRIPTION DESCRIPCION	MHD	ED	EHD			REMARKS OBSERVACIONES
1	688–W0001–02	POWER HEAD GASKET KIT JUEGO DE EMPAQUE	1	1	1			
2	688–14483–A0	.GASKET .EMPAQUE	1	1	1			
3	688–14416–01	.GASKET, AIR CLEANER .EMPAQUE	1	1	1			
4	688–14198–A2	.GASKET .EMPAQUE	3	3	3			
5	688–13621–A1	.GASKET, VALVE SEAT .JUNTA, DE VALV.DE EMPAQUE	2	2	2			
6	676–14984–00	.GASKET, FLOAT CHAMBER .EMPAQUE CAMARA DE BOIA	3	3	3			
7	688–11181–A2	.GASKET, CYLINDER HEAD 1 .JUNTA, DE CULATA 1	1	1	1			
8	90430–14115	.GASKET .JUNTA	1	1	1			
9	688–11193–A1	.GASKET, HEAD COVER 1 .EMPAQUE	1	1	1			
10	688–12414–A1	.GASKET, COVER .EMPAQUE	1	1	1			
11	688–41112–A0	.GASKET, EXHAUST INNER COVER .EMPAQUE	1	1	1			
12	688–41114–A0	.GASKET, EXHAUST OUTER COVER .EMPAQUE	1	1	1			
13	93210–46M16	.O-RING .ANILLO O	1	1	1			
14	93102–36M02	.OIL SEAL .SELLO ACEITE	1	1	1			
15	93102–30M05	.OIL SEAL .SELLO ACEITE	1	1	1			
16	93104–20M02	.OIL SEAL .SELLO ACEITE	1	1	1			
17	93210–62269	.O-RING .ANILLO O	1	1	1			
18	688–45113–A0	.GASKET, UPPER CASING .EMPAQUE	1	1	1			
19	93210–32738	.O-RING .ANILLO O	1	1	1			
20	650–24431–A0	.GASKET, FUEL PUMP 1 .EMPAQUE BOMBA COMBUST 1	1	1	1			
21	6H1–W0093–02	CARBURETOR REPAIR KIT KIT REPARACION CARBURADOR	1	1	1			
22	688–14198–A2	.GASKET .EMPAQUE	3	3	3			
23	93210–04228	.O-RING .ANILLO O	3	3	3			
24	692–14590–02	.NEEDLE VALVE ASSY .VALVULA DE AGUJA COMPLETA	3	3	3			
25	676–14186–00	.PIN, FLOAT .PASADOR DE LA BOYA	3	3	3			
26	676–14985–01	.FLOAT .BOIA	3	3	3			
27	688–14548–00	.PIN, FLOAT ARM .PASADOR DE BRAZO DE BOIA	3	3	3			

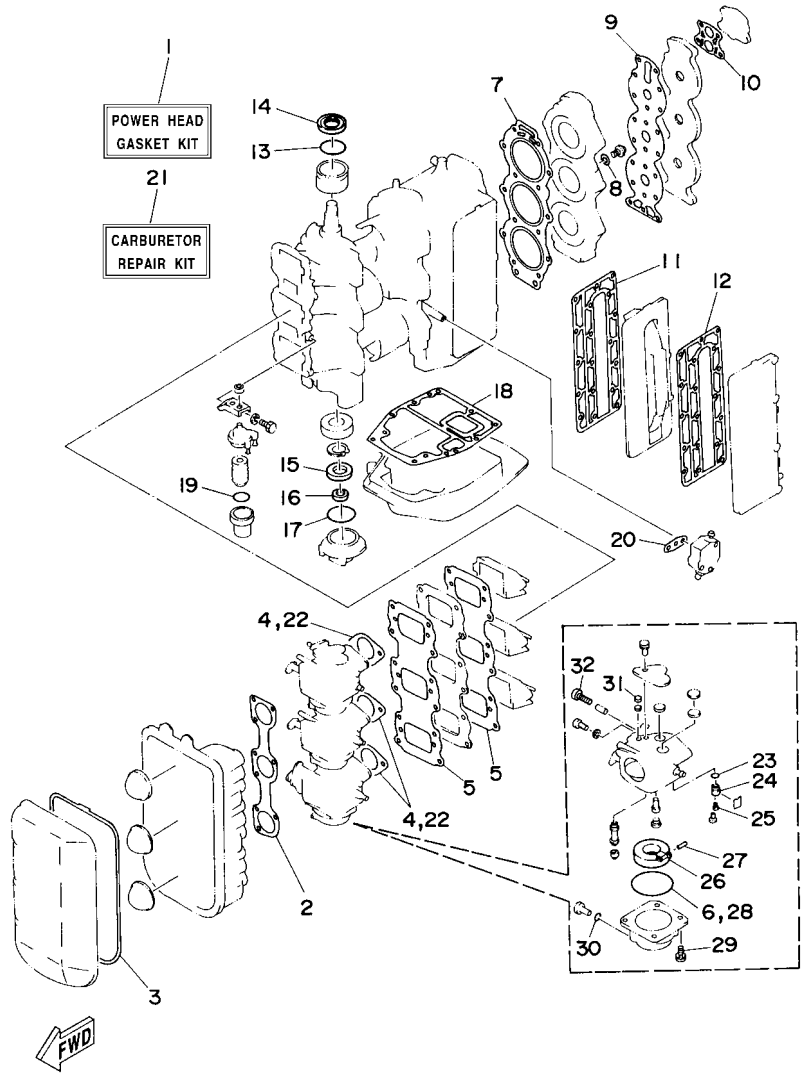

6880010-4180

FIG. 28 REPAIR KIT 1 — ESTUCHE REPARATION 1

REF. NO.	PART NO. CODIGO Nº	DESCRIPTION DESCRIPCION	MHD	ED	EHD			REMARKS OBSERVACIONES
28	676–14984–00	.GASKET, FLOAT CHAMBER .EMPAQUE CAMARA DE BOIA	3	3	3			
29	97980–04114	.SCREW, WITH WASHER .TORNILLO, CON ARANDELA	3	3	3			
30	93210–04230	.O-RING .ANILLO O	3	3	3			
31	663–14126–00	.GASKET .EMPAQUE	3	3	3			
32	692–14923–00	.SCREW, PILOT .TORNILLO DE AJUSTE	3	3	3			

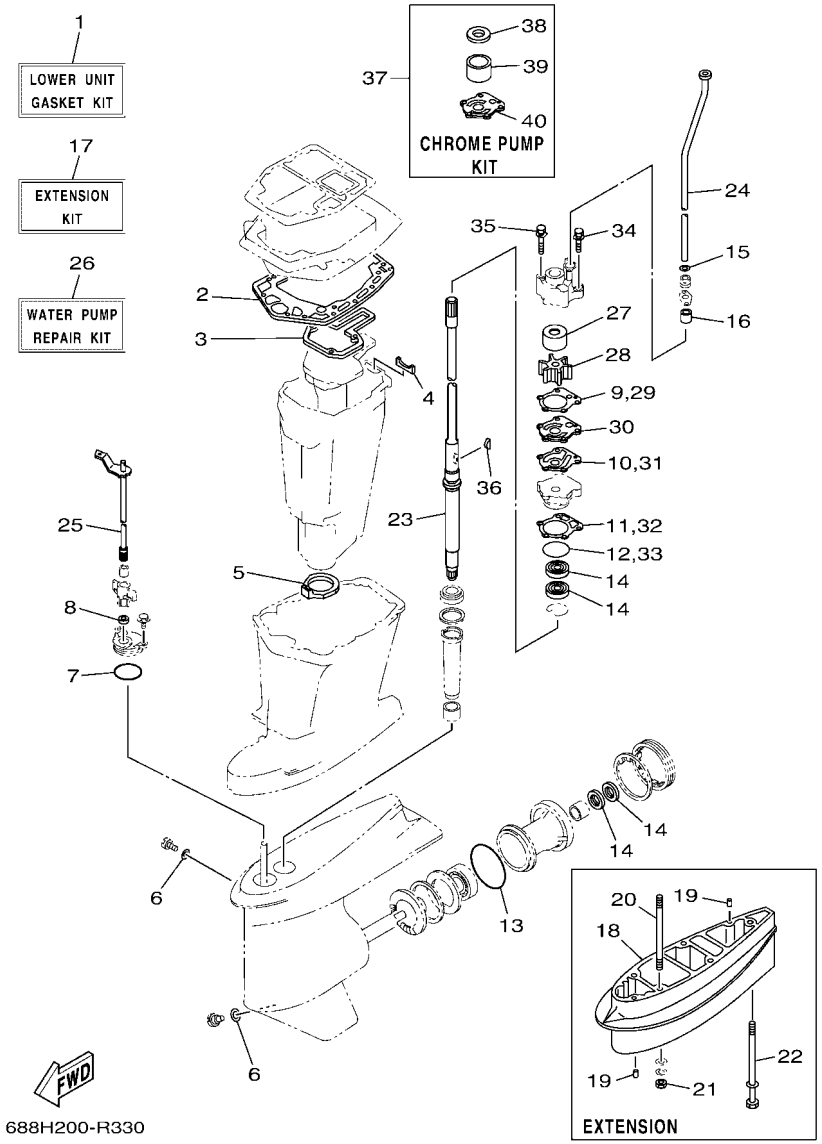

FIG. 29 REPAIR KIT 2 — ESTUCHE REPARATION 2

REF. NO.	PART NO. CODIGO Nº	DESCRIPTION DESCRIPCION	MHD	ED	EHD			REMARKS OBSERVACIONES
1	688–W0001–23	LOWER UNIT GASKET KIT JUEGO DE EMPAQUE UNIDAD INFER.	1	1	1			
2	688–45114–A1	.GASKET, UPPER CASING .EMPAQUE	1	1	1			
3	688–41134–A0	.GASKET, EXHAUST MANIFOLD .EMPAQUE	1	1	1			
4	688–41133–01	.GASKET, EXHAUST MANIFOLD 1 .EMPAQUE ESCAPE MULTIPLE	1	1	1			
5	688–45123–00	.GASKET, MUFFLER .EMPAQUE SILENCIADOR	1	1	1			
6	90430–08003	.GASKET .JUNTA	2	2	2			
7	93210–49046	.O-RING .ANILLO O	1	1	1			
8	93106–09014	.OIL SEAL .SELLO ACEITE	1	1	1			
9	688–44315–A0	.GASKET, WATER PUMP .EMPAQUE	1	1	1			
10	688–44324–A0	.GASKET, CARTRIDGE .EMPAQUE	1	1	1			
11	688–44316–A0	.GASKET, WATER PUMP .EMPAQUE	1	1	1			
12	93210–46044	.O-RING .ANILLO O	1	1	1			
13	93210–85M97	.O-RING .ANILLO O	1	1	1			
14	93101–25M03	.OIL SEAL .SELLO ACEITE	4	4	4			
15	90430–12072	.GASKET .JUNTA	1	1	1			
16	663–44366–01	.DAMPER, WATER SEAL 2 .GOMA DEL SELLO DE AGUA 2	1	1	1			
17	688–W0072–01–8D	EXTENSION KIT ESTUCHE PARA EXTENSION	1		1			X(25.5") X(25.5")
18	688–45211–01–8D	.EXTENSION .EXTENSION	1		1			
19	93606–12019	.PIN, DOWEL .PASADOR DE CLAVIJA	4		4			
20	90116–10M05	.BOLT, STUD .ESPARRAGO	4		4			
21	95380–10600	.NUT .TUERCA	4		4			
22	90119–08M86	.BOLT, WITH WASHER .TORNILLO CON ARANDELA	1		1			
23	688–45501–22	.DRIVE SHAFT COMP. .EJE DE MANDO COMPL.	1		1			
24	688–44361–21	.TUBE, WATER 1 .TUBO DE AGUA 1	1		1			
25	688–44120–22	.HANDLE GEAR SHIFT ASSY .MANIJA DE CAMBIO COMPL	1		1			
26	692–W0078–02	WATER PUMP REPAIR KIT ESTUCHE REPARACION BOMBA AGUA	1	1	1			
27	688–44322–00	.INSERT, CARTRIDGE .CARTUCHO	1	1	1			

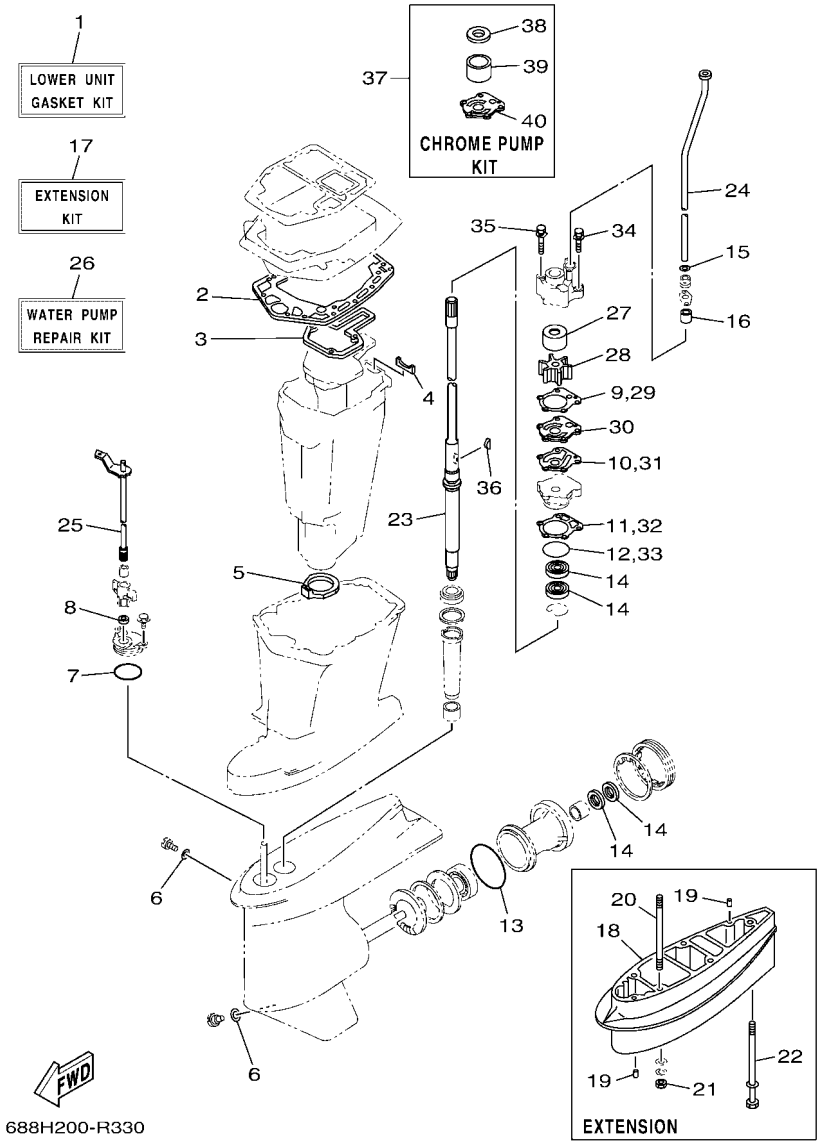

FIG. 29 REPAIR KIT 2 — ESTUCHE REPARATION 2

REF. NO.	PART NO. CODIGO Nº	DESCRIPTION DESCRIPCION	MHD	ED	EHD			REMARKS OBSERVACIONES
28	688–44352–03	.IMPELLER .IMPULSOR	1	1	1			
29	688–44315–A0	.GASKET, WATER PUMP .EMPAQUE	1	1	1			
30	688–44323–00	.OUTER PLATE, CARTRIDGE .PLACA EXTERIOR DEL CARTUCHO	1	1	1			
31	688–44324–A0	.GASKET, CARTRIDGE .EMPAQUE	1	1	1			
32	688–44316–A0	.GASKET, WATER PUMP .EMPAQUE	1	1	1			
33	93210–46044	.O-RING .ANILLO O	1	1	1			
34	90119–08192	.BOLT, WITH WASHER .TORNILLO CON ARANDELA	2	2	2			
35	90119–08196	.BOLT, WITH WASHER .TORNILLO CON ARANDELA	2	2	2			
36	90280–04M04	.KEY, WOODRUFF .CUNA WOODRUFF	1	1	1			
37	688–W0078–1A	CHROME PUMP KIT ESTUCHE REPARACION BOMBA AGUA	1	1	1			
38	688–44321–41	.INNER PLATE, CARTRIDGE .PLACA INTERIOR CARTUCHO	1	1	1			
39	688–44322–41	.INSERT, CARTRIDGE .CARTUCHO	1	1	1			
40	688–44323–40	.OUTER PLATE, CARTRIDGE .PLACA EXTERIOR DEL CARTUCHO	1	1	1			

NUMERICAL INDEX
INDICE NUMERICO

PART NO. CODIGO Nº	REF. NO.
692–11111–01–1S	3 – 27
688–11119–01	3 – 25
692–11119–01	3 – 25
688–11181–A2	3 – 28
	28 – 7
688–11191–00–1S	3 – 32
688–11193–A1	3 – 33
	28 – 9
688–11325–00	1 – 1
	3 – 23
650–11370–01	3 – 4
688–11370–01	3 – 3
	4 – 2
688–11411–01	4 – 10
663–11518–01	3 – 6
688–11603–A0	4 – 18
688–11604–A0	4 – 18
688–11605–A0	4 – 18
688–11631–03–94	4 – 17
663–11633–00	4 – 19
688–11634–00	4 – 20
688–11635–03	4 – 17
688–11636–03	4 – 17
688–11650–03	4 – 21
6E5–12411–30	1 – 2
	3 – 38
688–12412–00	3 – 39
688–12413–00–1S	3 – 40
6H1–12413–50	27 – 9
6H1–12414–50	27 – 14
688–12414–A1	1 – 3
	3 – 41
	28 – 10
688–12416–00	3 – 36
688–12440–51	27 – 1
6E5–12481–00	27 – 13
688–13610–00	5 – 13
688–13621–A1	5 – 11
	28 – 5
688–13624–00	5 – 12
688–13641–01	5 – 6
663–14126–00	6 – 20
	28 – 31
688–14126–00	6 – 22
633–14159–00	6 – 10
6H1–14169–50	27 – 7
676–14186–00	6 – 11
	28 – 25

PART NO. CODIGO Nº	REF. NO.
688–14198–A2	5 – 8
	28 – 4
	28 – 22
692–14301–48	6 – 1
692–14302–48	6 – 2
692–14303–48	6 – 3
6A0–14325–00	7 – 23
6H1–14348–51	27 – 10
688–14416–01	5 – 23
	28 – 3
688–14417–01	5 – 18
688–14418–10	5 – 22
688–14481–00	5 – 21
688–14483–A0	5 – 19
	28 – 2
624–14485–00	3 – 5
63V–14523–00	6 – 30
663–14527–00	6 – 21
688–14527–00	6 – 23
688–14548–00	6 – 14
	28 – 27
697–14555–00	6 – 27
688–14572–01	6 – 24
6H1–14572–50	27 – 5
6H2–14578–00	6 – 32
692–14590–02	6 – 9
	28 – 24
6K5–14592–00	6 – 28
688–14711–01–CA	20 – 10
688–14711–10–CA	20 – 10
663–14737–10	20 – 12
692–14923–00	6 – 26
	28 – 32
676–14943–41	6 – 5
6H1–14945–50	27 – 4
692–14947–00	6 – 4
676–14948–18	6 – 6
679–14966–00	6 – 7
6H1–14968–50	27 – 8
6H1–14969–50	27 – 3
688–14980–00	6 – 16
676–14984–00	6 – 15
	28 – 6
	28 – 28
676–14985–01	6 – 13
	28 – 26
6H3–14992–01	6 – 18
688–15100–07	3 – 2

PART NO. CODIGO Nº	REF. NO.
6H1–15359–01–94	4 – 1
688–15379–00	4 – 6
692–15711–01	8 – 2
663–15713–00	8 – 5
663–15714–02	8 – 6
663–15715–00	8 – 12
696–15716–00	8 – 13
663–15719–00	8 – 15
6K5–15723–00	8 – 26
663–15726–01	8 – 10
696–15734–00	8 – 14
663–15735–01	8 – 50
663–15736–01	8 – 56
663–15739–00	8 – 4
663–15741–02	8 – 8
663–15744–00	8 – 11
663–15752–00	8 – 18
6F5–15753–00	8 – 19
663–15754–00	8 – 9
689–15755–02	8 – 23
692–15758–01–8D	8 – 44
697–15761–01	2 – 15
697–15762–00	8 – 48
663–15764–00	8 – 7
692–15770–01	8 – 49
692–15771–00	8 – 32
692–15772–00	8 – 35
663–15772–01	8 – 61
648–15773–00	8 – 3
6F5–15779–02	8 – 25
697–15787–00	8 – 39
697–15789–01	8 – 45
6F5–15791–00	8 – 20
663–15794–00	8 – 55
6YJ–24167–00	24 – 7
6YJ–24201–21	24 – 1
6YJ–24260–11	24 – 3
6Y1–24268–01	24 – 6
6G1–24304–10	7 – 1
6G1–24305–05	24 – 13
6Y1–24305–06	24 – 15
61J–24306–05	24 – 8
663–24312–01	3 – 47
688–24313–00	7 – 30
688–24314–00	7 – 31
6Y1–24329–00	24 – 5
650–24351–51	24 – 12
61J–24360–00	24 – 10

PART NO. CODIGO Nº	REF. NO.
688–24378–00	7 – 34
692–24410–01	7 – 14
663–24411–00	7 – 19
692–24411–00	7 – 16
6A0–24412–02	7 – 24
6A0–24413–00	7 – 15
6A0–24421–01	7 – 22
650–24431–A0	7 – 25
	28 – 20
648–24434–01	7 – 17
648–24435–03	7 – 20
68V–24469–01	7 – 9
68V–24521–01	7 – 6
64J–24560–00	7 – 5
61N–24563–00	1 – 5
	7 – 7
648–24566–02	7 – 10
6YJ–24610–01	24 – 2
692–26301–03	15 – 19
688–41111–00–1S	3 – 43
688–41112–A0	3 – 44
	28 – 11
688–41113–00–1S	3 – 46
688–41114–A0	3 – 45
	28 – 12
688–41131–00–CA	20 – 8
688–41131–10–CA	20 – 8
688–41133–01	20 – 9
	29 – 4
688–41134–A0	20 – 7
	29 – 3
688–41137–09–CA	20 – 5
688–41211–01	16 – 27
688–41213–01	16 – 30
662–41214–01	16 – 7
688–41217–01	5 – 3
682–41237–00	16 – 26
	16 – 29
682–41237–50	16 – 24
692–41256–01	5 – 1
688–41257–01	5 – 4
6J8–41262–00	18 – 4
661–41262–02	5 – 5
689–41273–00	5 – 2
688–41611–00	9 – 9
688–41612–00	9 – 10
688–41631–01–1S	16 – 17
688–41632–09–1S	16 – 6

PART NO. CODIGO Nº	REF. NO.
692–42111–12–8D	15 – 2
692–42115–00	15 – 10
664–42119–00	15 – 3
692–42121–02–8D	15 – 20
663–42126–01	15 – 45
663–42133–01	15 – 14
692–42134–03–8D	15 – 15
692–42135–00	15 – 13
688–42137–00	15 – 5
663–42138–00	15 – 11
692–42164–00	15 – 40
6G1–42177–01	15 – 4
692–42510–00–8D	19 – 1
692–42610–74	2 – 1
692–42610–N2	2 – 1
688–42613–01–8D	2 – 9
692–42613–01–8D	2 – 9
688–42615–01	2 – 14
688–42618–00	2 – 10
692–4261A–02	2 – 2
688–4261A–12	2 – 2
688–42628–00	2 – 11
688–42647–00	2 – 3
688–42649–00	2 – 4
692–42649–00	2 – 4
688–42652–10	2 – 6
663–42662–01	2 – 5
692–42675–51	2 – 16
692–42676–51	2 – 17
692–42678–51	2 – 18
	2 – 19
688–42681–71	2 – 20
	2 – 21
688–42710–10–8D	14 – 1
648–42715–00	16 – 46
688–42716–03	14 – 10
663–42724–01	14 – 11
692–42725–01	14 – 12
688–42725–03	14 – 12
692–42725–11	14 – 12
6H4–42726–01	14 – 22
688–42738–01–8D	14 – 13
688–42741–01–8D	14 – 23
6BG–42748–01	14 – 15
688–42771–01–8D	14 – 24
6EE–42794–40	14 – 27
6EE–42794–50	14 – 28
688–42815–01–8D	14 – 3

PART NO. CODIGO Nº	REF. NO.
688–42816–00	14 – 8
688–42817–01–8D	14 – 4
688–43107–05–8D	18 – 7
688–43111–13–8D	17 – 1
688–43112–12–8D	17 – 6
688–43124–02	18 – 12
6E5–43126–10	17 – 30
688–43128–01–8D	18 – 1
688–43131–03	17 – 12
6G5–43144–00	17 – 26
6G5–43145–01	17 – 16
6G5–43148–00	17 – 21
688–43160–01	17 – 28
688–43181–10	17 – 17
688–43185–10	17 – 18
688–43186–00	18 – 2
6H1–43311–02–8D	17 – 10
663–43318–00	17 – 19
682–43318–01	18 – 10
688–43616–00	18 – 5
688–43631–10	18 – 8
688–43651–00	18 – 9
697–43662–00	16 – 52
697–44113–01	15 – 28
688–44117–00–94	16 – 34
688–44118–01–94	16 – 42
692–44120–02	16 – 47
688–44120–14	16 – 47
692–44120–14	16 – 47
688–44120–22	29 – 25
688–44120–24	16 – 47
692–44120–24	16 – 47
692–44120–44	16 – 47
6H1–44121–00	16 – 40
688–44121–02	16 – 40
688–44122–00	16 – 37
688–44124–00	16 – 36
6H1–44144–00	22 – 67
663–44144–01	21 – 59
696–44147–00	16 – 48
663–44151–00	21 – 58
6H1–44151–00	22 – 66
692–44159–02	15 – 31
663–44173–01	15 – 32
703–44189–20	26 – 36
703–44189–30	26 – 42
6K5–44191–00	15 – 29
6X3–44191–00	26 – 47

NUMERICAL INDEX
INDICE NUMERICO

PART NO. CODIGO Nº	REF. NO.
688–44194–00	3 – 13
	16 – 21
69D–44194–10	19 – 31
688–44311–01	21 – 20
	22 – 21
688–44315–A0	21 – 23
	22 – 24
	29 – 9
	29 – 29
688–44316–A0	21 – 30
	22 – 31
	29 – 11
	29 – 32
688–44321–41	21 – 22
	22 – 23
	29 – 38
688–44322–00	29 – 27
688–44322–41	21 – 21
	22 – 22
	29 – 39
688–44323–00	29 – 30
688–44323–40	21 – 31
	22 – 32
	29 – 40
688–44324–A0	21 – 32
	22 – 33
	29 – 10
	29 – 31
6D8–44341–01–CA	21 – 26
	22 – 27
688–44352–03	21 – 24
	22 – 25
	29 – 28
688–44361–11	23 – 2
692–44361–20	23 – 2
688–44361–21	23 – 2
	29 – 24
663–44366–01	23 – 12
	29 – 16
663–44367–01	23 – 1
6BL–44391–00	14 – 2
688–44511–00	19 – 26
688–44514–00	19 – 19
6EK–44536–00	17 – 3
692–44551–00–8D	19 – 7
688–44553–10–8D	19 – 17
687–44555–00	19 – 9
663–44575–01	19 – 25

PART NO. CODIGO Nº	REF. NO.
688–44575–01	19 – 14
688–45111–04–8D	20 – 1
688–45113–A0	20 – 17
	28 – 18
688–45114–A1	20 – 6
	29 – 2
688–45123–00	20 – 11
	29 – 5
663–45155–10	20 – 2
688–45211–01–8D	20 – 26
	29 – 18
696–45211–01–8D	20 – 19
6H1–45214–00	21 – 12
	22 – 12
6H1–45215–00	21 – 13
	22 – 13
6H1–45251–03	1 – 7
	17 – 2
692–45300–18–8D	21 – 1
692–45300–27–8D	21 – 1
692–45300–37–8D	21 – 1
692–45300–43–8D	22 – 1
6H1–45301–03–8D	22 – 2
688–45311–06–8D	21 – 2
688–45321–00	21 – 16
	22 – 17
688–45331–00–CA	21 – 48
	22 – 56
688–45341–10	21 – 10
	22 – 10
67F–45371–00	1 – 9
	23 – 10
6E5–45371–10	1 – 10
	23 – 22
688–45375–00	23 – 9
663–45376–00	23 – 8
6J8–45378–00	22 – 16
688–45383–02	21 – 55
	22 – 63
688–45384–02	21 – 56
	22 – 64
688–45501–11	21 – 36
	22 – 37
692–45501–21	21 – 36
688–45501–22	21 – 36
	29 – 23
688–45536–01	21 – 4
	22 – 4

PART NO. CODIGO Nº	REF. NO.
688–45551–01	21 – 37
	22 – 38
688–45560–00	21 – 39
	22 – 40
688–45567–01	21 – 7
	22 – 7
688–45567–10	21 – 7
	22 – 7
688–45567–20	21 – 7
	22 – 7
688–45567–30	21 – 7
	22 – 7
688–45567–40	21 – 7
	22 – 7
688–45567–50	21 – 7
	22 – 7
688–45567–60	21 – 7
	22 – 7
6H1–45571–00	22 – 55
688–45571–01	21 – 47
688–45576–00	21 – 51
	22 – 59
688–45577–01	21 – 50
	22 – 58
688–45577–10	21 – 50
	22 – 58
688–45577–20	21 – 50
	22 – 58
688–45577–30	21 – 50
	22 – 58
688–45577–40	21 – 50
	22 – 58
688–45577–50	21 – 50
	22 – 58
688–45577–60	21 – 50
	22 – 58
688–45587–01	21 – 5
	22 – 5
688–45587–10	21 – 5
	22 – 5
688–45587–20	21 – 5
	22 – 5
688–45587–30	21 – 5
	22 – 5
688–45587–40	21 – 5
	22 – 5
688–45587–50	21 – 5
	22 – 5

PART NO. CODIGO Nº	REF. NO.
688–45587–60	21 – 5
	22 – 5
688–45611–00	21 – 40
6H1–45611–01	22 – 41
688–45631–01	21 – 43
6H1–45631–01	22 – 51
688–45633–00	21 – 45
	22 – 53
688–45634–00	21 – 42
6H1–45634–02	22 – 46
688–45635–00	21 – 46
6H1–45635–00	22 – 54
6H1–45641–01	22 – 43
6H1–45668–00	22 – 48
688–45930–02	23 – 20
688–45932–60	23 – 20
6E5–45941–00	23 – 20
6E5–45943–00	23 – 20
6E5–45945–01	23 – 20
6E5–45947–00	23 – 20
6E5–45949–00	23 – 20
6E5–45952–00	23 – 20
6E5–45954–00	23 – 20
688–45970–03	23 – 20
6E5–45970–10	23 – 21
688–45972–02	23 – 20
6E5–45972–10	23 – 21
688–45974–02	23 – 20
6E5–45974–10	23 – 21
688–45976–01	23 – 20
6E5–45976–10	23 – 21
6E5–45978–10	23 – 21
688–45978–60	23 – 20
688–45987–01	23 – 15
6E5–45994–10	23 – 23
67F–45997–00	23 – 16
703–48128–10	26 – 39
703–48129–00	26 – 41
703–48152–10	26 – 6
703–48153–00	26 – 60
703–48189–00	26 – 19
703–48198–00	26 – 16
703–48203–24	25 – 1
	26 – 1
703–48211–10	26 – 25
703–48212–10	26 – 26
703–48213–10	26 – 27
703–48215–11	26 – 46

PART NO. CODIGO Nº	REF. NO.
703–48219–10	26 – 34
703–48221–10	26 – 28
703–48222–30	26 – 31
703–48223–10	26 – 32
703–48225–10	26 – 33
703–48227–00	26 – 30
703–48232–00	26 – 2
703–48234–00	26 – 20
703–48235–00	26 – 5
703–48236–00	26 – 18
703–48238–00	26 – 24
703–48243–00	26 – 17
703–48244–00	26 – 23
703–48245–00	26 – 13
703–48246–00	26 – 29
701–48248–00	26 – 15
703–48252–00	26 – 14
703–48261–01	26 – 4
703–48264–00	26 – 8
703–48265–10	26 – 11
703–48268–00	26 – 7
703–48271–00	26 – 3
703–48281–00	26 – 35
703–48284–00	26 – 57
701–48287–00	26 – 45
703–48293–11	26 – 44
701–48320–80	25 – 2
700–48339–00	15 – 44
6FM–48344–00	16 – 5
703–48345–01	26 – 21
703–48358–01	26 – 22
688–48511–12	19 – 28
663–48531–00	16 – 1
663–48538–00	16 – 2
688–81332–01	9 – 12
688–81800–13	13 – 1
676–81809–10	13 – 3
688–81810–11	13 – 5
663–81811–11	13 – 6
663–81812–11	13 – 8
663–81813–10	13 – 9
663–81820–12	13 – 10
688–81824–00	13 – 15
663–81826–10	13 – 14
688–81830–11	13 – 12
688–81831–00	13 – 13
663–81832–12	13 – 11
663–81840–11	13 – 7

PART NO. CODIGO Nº	REF. NO.
688–81842–00	13 – 16
676–81850–11	13 – 2
676–81857–10	13 – 4
6H1–81916–00	10 – 18
	11 – 19
6G1–81941–10	11 – 8
6E9–81945–70	11 – 10
6G1–81952–01	11 – 9
6H0–81960–00	10 – 5
	11 – 5
6EE–81994–40	5 – 29
6EE–81994–50	5 – 30
6EE–81995–40	5 – 31
6EE–81995–50	5 – 32
6H0–82105–04	11 – 26
6H0–82117–01	11 – 27
703–82119–01	10 – 24
	11 – 30
	14 – 21
6H1–82127–00	19 – 18
6E5–82148–00	17 – 7
663–82151–01	11 – 25
6G5–82152–00	11 – 12
6A0–82317–01	8 – 42
663–82370–01	10 – 20
	11 – 21
6G1–82370–21	10 – 20
6H3–82510–22	12 – 1
703–82510–34	26 – 48
61A–82519–00	10 – 26
697–82519–00	10 – 25
	11 – 28
697–8252E–02–8D	12 – 10
697–8252F–02–8D	12 – 11
703–82531–00	26 – 51
6K1–82532–00	26 – 50
703–82532–00	12 – 3
703–82540–00	26 – 55
688–82540–12	12 – 7
663–82554–01	12 – 8
663–82555–01	12 – 9
682–82556–00	12 – 5
	15 – 50
	26 – 53
688–82560–10	10 – 21
	11 – 22
697–82575–00	15 – 49
688–82575–02	26 – 52

NUMERICAL INDEX
INDICE NUMERICO

PART NO. CODIGO Nº	REF. NO.
688–82575–12	12 – 4
703–82577–00	26 – 49
676–82577–01	12 – 2
689–8257Y–00	15 – 51
688–82586–21	26 – 54
688–82588–01	10 – 22
	11 – 23
6GJ–82590–00	10 – 23
688–82590–42	11 – 24
688–82590–52	11 – 24
703–82591–00	26 – 58
703–82592–00	26 – 59
688–82594–00	11 – 29
703–83383–11	26 – 56
688–85510–01	9 – 2
663–85518–00	16 – 18
688–85540–00	10 – 1
	11 – 1
688–85542–10	10 – 8
	11 – 13
688–85550–00	9 – 1
692–85550–00	9 – 1
697–85570–00	10 – 3
	11 – 3
688–85580–00	9 – 3
688–86110–01	5 – 26
688–W0001–02	28 – 1
688–W0001–23	29 – 1
688–W0004–00	5 – 14
688–W0072–01–8D	29 – 17
692–W0078–02	1 – 11
	29 – 26
688–W0078–1A	29 – 37
692–W0084–14–8D	15 – 1
692–W0090–46–1S	3 – 1
6H1–W0093–02	28 – 21
692–W1571–04	8 – 1
656–W2810–03	7 – 35
90101–06M27	15 – 46
90101–08002	3 – 26
90101–10041	19 – 20
90101–12063	17 – 34
90101–12075	15 – 21
90105–10M67	23 – 11
90109–06M39	10 – 12
	11 – 17
90109–06M86	14 – 14
90109–08022	4 – 22

PART NO. CODIGO Nº	REF. NO.
90109–12261	19 – 13
90116–06122	5 – 7
90116–06M22	10 – 14
90116–10063	19 – 29
90116–10M05	20 – 27
	29 – 20
90116–10M06	3 – 21
90116–10M31	20 – 20
90119–06274	17 – 4
90119–06275	14 – 9
90119–06291	14 – 19
90119–06292	8 – 40
90119–06298	16 – 33
90119–06M12	3 – 8
90119–06M75	10 – 11
	11 – 16
90119–06MA3	3 – 34
90119–06MA5	3 – 42
90119–08020	3 – 49
90119–08155	20 – 23
90119–08158	20 – 30
90119–08188	8 – 29
90119–08192	21 – 35
	22 – 36
	29 – 34
90119–08196	21 – 34
	22 – 35
	29 – 35
90119–08M80	20 – 4
90119–08M86	29 – 22
90119–08MA8	3 – 29
90119–10005	3 – 9
90149–05095	8 – 53
90151–05M00	21 – 14
	22 – 14
90152–05011	15 – 6
90157–05M19	24 – 4
90157–06013	16 – 20
90157–06014	3 – 12
90159–06M11	10 – 19
	11 – 20
90159–06M19	5 – 27
90159–06M31	9 – 11
90160–04006	23 – 14
90170–16M01	21 – 38
	22 – 39
90170–20137	9 – 7
90171–16011	23 – 18

PART NO. CODIGO Nº	REF. NO.
90175–06003	15 – 48
90176–12004	19 – 15
90183–02M03	22 – 50
90185–05002	21 – 15
	22 – 15
90185–10027	15 – 37
	19 – 24
	19 – 30
90185–12058	15 – 27
90185–22043	17 – 15
90201–03313	22 – 49
90201–05552	6 – 29
90201–06416	14 – 17
90201–06M31	10 – 13
	11 – 18
90201–08M13	16 – 15
90201–08M23	16 – 10
90201–10008	3 – 10
90201–10049	19 – 32
90201–10120	15 – 36
90201–10M02	15 – 7
90201–11M22	19 – 23
90201–12062	17 – 35
90201–12426	17 – 36
90201–12537	15 – 25
90201–12M16	19 – 10
90201–12M34	15 – 39
90201–13M19	19 – 12
90201–20417	4 – 24
90201–20M21	19 – 21
90201–21M18	9 – 8
90201–22M67	17 – 14
90201–30M00	19 – 2
90202–03M51	18 – 6
90202–07M07	16 – 38
90202–12060	23 – 3
90202–12092	15 – 24
	16 – 14
90202–20M06	19 – 22
90202–25M04	19 – 11
90206–10M04	16 – 32
90206–12054	15 – 26
90206–13019	14 – 7
90209–06M05	5 – 25
90240–06M18	8 – 57
90249–06M19	17 – 23
90250–07M02	21 – 44
	22 – 52

PART NO. CODIGO Nº	REF. NO.
90254–03003	15 – 12
90266–06009	2 – 8
90280–04M04	21 – 25
	22 – 26
	29 – 36
90280–05015	9 – 6
90282–04010	21 – 57
	22 – 65
90338–05M03	14 – 20
90340–08002	21 – 9
	22 – 9
90340–14M06	3 – 30
90385–12M04	8 – 27
90386–06088	15 – 43
90386–06M12	16 – 41
90386–07M58	16 – 49
90386–08006	16 – 49
90386–08032	15 – 9
90386–10009	15 – 35
90386–10M16	17 – 20
90386–12089	15 – 23
	16 – 11
90386–13M38	14 – 5
90386–16002	14 – 6
90386–18M21	17 – 31
90386–18M35	17 – 32
	18 – 14
90386–18M63	18 – 13
90386–22M13	16 – 13
90386–22M15	17 – 13
90386–30M60	19 – 6
90386–30M77	19 – 4
90386–30M78	19 – 3
90387–06119	8 – 43
90387–06M03	10 – 10
	11 – 15
90387–06M17	16 – 31
90387–06M69	14 – 16
90387–08M05	8 – 28
90387–08M16	16 – 12
90387–10M02	17 – 24
90387–12M30	15 – 38
90389–25M00	23 – 17
90430–08003	1 – 8
	21 – 11
	22 – 11
	29 – 6
90430–12072	23 – 4

PART NO. CODIGO Nº	REF. NO.
90430–12072	29 – 15
90430–14115	3 – 31
	28 – 8
90445–07260	3 – 15
90445–07M00	3 – 18
90445–07M23	3 – 19
90445–07M86	4 – 7
90445–09090	7 – 3
90445–09097	7 – 27
	7 – 29
90445–09220	7 – 33
90445–11M01	27 – 6
90445–11M57	24 – 11
90445–11M58	24 – 9
90464–12M00	9 – 5
90465–06M90	8 – 60
	15 – 52
90467–06016	3 – 16
	3 – 20
	4 – 8
90467–08004	3 – 48
	7 – 4
	7 – 28
	7 – 32
90467–10M04	27 – 12
90468–18008	8 – 63
	16 – 8
	16 – 39
	16 – 51
90480–09M25	10 – 9
	11 – 14
90480–19M06	23 – 13
90480–20M05	3 – 35
90480–24M04	3 – 17
90501–10326	6 – 31
90501–12082	16 – 45
90501–12M48	22 – 42
90501–16233	21 – 41
90501–16M11	3 – 37
90501–16M12	16 – 23
90501–16M17	15 – 33
90501–16M65	22 – 47
90501–23215	15 – 8
90502–16M02	17 – 29
90506–08M23	8 – 51
90506–14M24	17 – 25
90508–12015	8 – 52
90508–29M05	16 – 16

PART NO. CODIGO Nº	REF. NO.
91490–16012	8 – 59
91490–25012	15 – 42
91490–30025	23 – 19
91690–30012	16 – 3
91690–30020	17 – 22
	18 – 3
92903–06100	12 – 16
92903–06600	7 – 12
92903–08600	8 – 31
92990–05100	5 – 16
92990–06100	10 – 17
	12 – 13
92990–06200	8 – 58
	10 – 16
92990–06600	15 – 41
	15 – 47
92990–08200	16 – 50
92990–08600	13 – 19
	26 – 38
92990–10100	20 – 25
	20 – 32
92990–12200	15 – 22
92995–06100	5 – 9
	8 – 17
	8 – 22
92995–10600	20 – 24
	20 – 31
93101–25M03	21 – 28
	21 – 54
	22 – 29
	22 – 62
	29 – 14
93102–30M05	4 – 3
	28 – 15
93102–36M02	4 – 12
	28 – 14
93104–20M02	4 – 4
	28 – 16
93106–09014	21 – 18
	22 – 19
	29 – 8
93210–03261	5 – 28
93210–04228	6 – 8
	28 – 23
93210–04230	6 – 19
	28 – 30
93210–07003	22 – 68
93210–08287	24 – 14

NUMERICAL INDEX
INDICE NUMERICO

PART NO. CODIGO Nº	REF. NO.
93210–08287	24 – 16
93210–15M52	27 – 11
93210–29M94	19 – 5
93210–32738	1 – 6
	7 – 8
	28 – 19
93210–46044	21 – 29
	22 – 30
	29 – 12
	29 – 33
93210–46M16	4 – 13
	28 – 13
93210–49046	21 – 17
	22 – 18
	29 – 7
93210–62269	4 – 5
	28 – 17
93210–85M97	21 – 52
	22 – 60
	29 – 13
93306–206U5	4 – 15
93306–207U0	21 – 49
	22 – 57
93310–636U4	4 – 11
93310–730V8	4 – 25
93310–835U8	4 – 14
93315–325V1	21 – 3
	22 – 3
93317–325U0	21 – 53
	22 – 61
93332–000U3	21 – 6
	22 – 6
93332–000W7	21 – 8
	22 – 8
93410–18M05	17 – 33
93410–28M06	19 – 8
93410–32M00	4 – 16
93430–06024	26 – 12
93450–07M00	22 – 70
93450–44166	21 – 27
	22 – 28
93501–04M02	16 – 44
93503–16003	22 – 44
93515–32M01	15 – 34
93603–12M11	22 – 45
93603–21111	4 – 23
93604–10M03	21 – 33
	22 – 34

PART NO. CODIGO Nº	REF. NO.
93606–12019	20 – 3
	20 – 18
	20 – 21
	20 – 28
	23 – 5
	29 – 19
93700–06002	15 – 16
93700–06004	17 – 11
94702–00160	1 – 4
	3 – 50
94702–00247	1 – 4
	3 – 50
95303–05700	16 – 19
95303–06600	8 – 38
	8 – 41
	8 – 47
	16 – 22
95303–06700	3 – 14
95313–10600	3 – 11
95380–03600	7 – 18
95380–05600	16 – 25
	16 – 28
	26 – 9
95380–06600	5 – 10
	26 – 43
95380–06700	10 – 15
95380–08600	7 – 13
95380–10600	20 – 22
	20 – 29
	29 – 21
95380–12600	17 – 37
97013–06014	7 – 11
97013–06018	5 – 20
97013–06020	12 – 15
97013–08012	8 – 62
97013–08016	8 – 30
97017–06025	8 – 21
97080–06010	18 – 11
97095–06016	8 – 16
97380–05025	26 – 10
97380–08030	26 – 37
97513–06516	10 – 7
	11 – 11
	15 – 30
97513–06520	16 – 35
97513–06525	8 – 34
97513–06530	5 – 17
	8 – 37

PART NO. CODIGO Nº	REF. NO.
97513–06530	9 – 4
	12 – 14
97513–06535	8 – 33
97513–08530	13 – 18
97513–08540	8 – 36
97513–08630	16 – 43
97880–05020	5 – 15
97880–06012	17 – 8
97880–06025	12 – 12
97885–05012	15 – 18
97885–06008	15 – 17
97885–06012	12 – 6
	15 – 53
97885–06016	5 – 24
97980–04114	6 – 17
	28 – 29
97980–04210	13 – 17
97980–05114	27 – 2
97980–05128	7 – 21
97980–05310	6 – 25
97980–06340	10 – 2
	11 – 2
97D95–06030	14 – 18
97D95–08045	16 – 9
97E75–08525	20 – 14
97E75–08530	20 – 13
	20 – 15
97E75–08535	19 – 27
	20 – 16
97E75–08540	19 – 16
97E75–08560	23 – 7
97E75–10640	23 – 6
97E95–06510	9 – 13
97E95–06512	3 – 22
	8 – 54
	11 – 6
	17 – 27
97E95–06516	2 – 12
	21 – 19
	22 – 20
97E95–06520	2 – 13
	4 – 9
	10 – 4
	10 – 6
	11 – 4
	11 – 7
	14 – 25
97E95–06525	2 – 13

PART NO. CODIGO Nº	REF. NO.
97E95–06525	7 – 2
97E95–06530	14 – 26
97E95–06540	7 – 26
97E95–06616	17 – 5
97E95–06618	2 – 7
97E95–06620	8 – 46
97E95–08516	16 – 4
97E95–10545	17 – 9
98580–04006	26 – 40
98580–04008	6 – 12
98780–04015	3 – 24
99001–08600	21 – 60
	22 – 69
99530–08012	3 – 7