YAMAHA

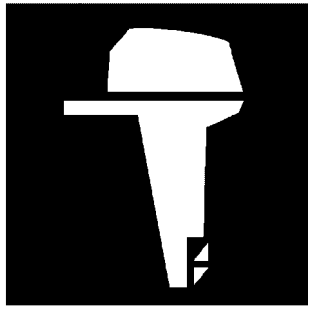

PARTS CATALOGUE
CATALOGO DE REPUESTOS

E40G'24 (6F6S)
E40J'24 (6J4S)

YAMAHA
GENUINE
Parts & Accessories

1Y6F6-200SA

( )

E40G/E40J
PARTS CATALOGUE
©2024 by Yamaha Motor Co., Ltd.
1st edition, September 2024
All rights reserved.
Any reprinting or unauthorized use
without the written permission of
Yamaha Motor Co., Ltd.
is expressly prohibited.
Printed in Japan.

E40G/E40J
CATALOGO DE REPUESTOS
©2024 por Yamaha Motor Co., Ltd.
1ª edición, septiembre 2024
Todos los derechos reservados.
Toda reproducción o uso no autorizado
sin el consentimiento escrito de
Yamaha Motor Co., Ltd.
quedan expresamente prohibidos
Impreso en Japón.

FOREWORD

This Parts Catalogue is related to the parts for the model(s) on the cover page. When you are ordering replacement parts, please refer to this Parts Catalogue and quote both part numbers and part names correctly.

1. Modifications or additions which have been made after the issue of the Parts Catalogue will be announced in the Parts News.
   It is advisable that you make the necessary corrections to the Parts Catalogue according to the Parts News.

2. Abbreviations
   The following abbreviations are used in this Parts Catalogue.
   "UR" Use specified parts number.
   "UN" Use as many as needed.
   "AP" Alternate Parts
   "LM" Locally Made (Parts need to be ordered locally)
   "F#" Frame No. (Applicable machine No.)
   "O/S" Over Size

3. The number of components for assembly
   - Parts, which are to be supplied in an assembly, are listed with a dot (.) in front of the part name as shown below.
   - The numeral appearing to the right of each component part indicates the quantity of parts for each assembly unit.

PART NO.	DESCRIPTION	Q'TY	REMARKS
2F5–83310–60	FRONT FLASHER LIGHT ASSY	2	
115–83311–60	.BULB (6V–18W)	1	

4. Applicable colours of graphics are represented in the "REMARKS" as shown below.

PART NO.	DESCRIPTION	Q'TY	REMARKS
2N4–24110–00–X5	FUEL TANK COMP.	2	MXR
3J1–24240–10	.GRAPHIC, FUEL TANK	1	FOR MXR

5. Note that the illustrations for reference in finding parts numbers are not to be used for assembling. When assembling, please use the applicable service manual.

6. The asterisk (*) before a reference number indicates modified items after the first edition.

7. Applicable Serial No.
   Engine Serial No.

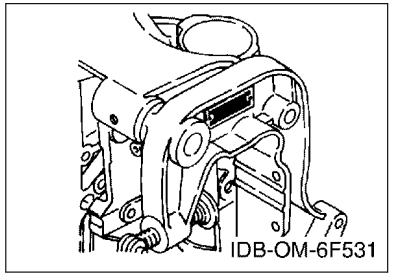

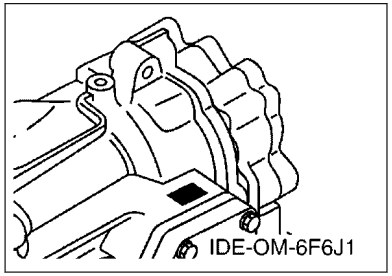

8. Applicable Engine Starting Serial No.

Model	Serial No.	Model	Serial No.
E40G	6F6K-1139981	E40J	6J4K-1107560

9. Applicable Colour Code

Abbreviation	Colour Name	Colour Code
DBN1	DARK BLUISH GRAY 1	008D

10. Quantity Column Information

Column No.	Name Of Q'ty Column	Applicable Model
1	E40M	E40GMH
2	40MH	E40JMH
3	E40W	E40GWH
4	40WH	E40JWH
5	40W	E40JW

PROLOGO

Este catálogo de repuestos corresponde a las piezas para el o los modelos que figuran en la página de portada. Al formular el pedido de repuestos, se ruega citar este catálogo y especificar correctamente el número y el nombre de las piezas.

1. Las modificaciones y agregados que se hayan realizado después de la edición de este Catálogo de Repuestos, serán anunciados en las Informaciones de Recambios.
   Es recomendable que se hagan las correcciones necesarias en el Catálogo de Repuestos de acuerdo con las Informaciones de Recambios.

2. Abreviaciones
   En este. Catálogo de Repuestos se emplean las siguientes abreviaciones.
   "UR" Usar el número de partes especificado
   "UN" Usar la cantidad necesaria
   "AP" Piezas sustitutivas
   "LM" Fabricación local (Hay que pedir los repuestos en las cercanías)
   "F#" Nº de bastidor (Nº aplicable a la máquina)
   "O/S" Sobredimensionado

3. La cantidad de componentes para el montaje
   - Los componentes, suministrados como conjunto, se describen con un punto (.) que precede al nombre del parte como se indica a continuación.
   - La numeración que aparece a la derecha de cada descripción indica la cantidad de partes por cada unidad de conjunto.

CODIGO Nº	DESCRIPCION	CANT.	OBSERVACIONES
2F5–83310–60	ENSAMBLAJE DE LA LUZ	2	
115–83311–60	.BOMBILLA (6V–18W)	1	

4. Los colores de los componentes se indican como sigue en la columna de "OBSERVACIONES".

CODIGO Nº	DESCRIPCION	CANT.	OBSERVACIONES
2N4–24110–00–X5	COMP. DEL TANQUE	2	MXR
3J1–24240–10	.GRAFICO, DEL TANQUE	1	PARA MXR

5. Debe tenerse en cuenta que las ilustraciones sirven como guia para la búsqueda de los números de partes y no deben usarse para el montaje. Durante el montaje, se recomienda usar el manual de taller correspondiente.

6. EL asterisco (*) antes del número de referencia indica los elementos modificados después de la primera edición.

7. Números de serie
   Nº de Serie del motor

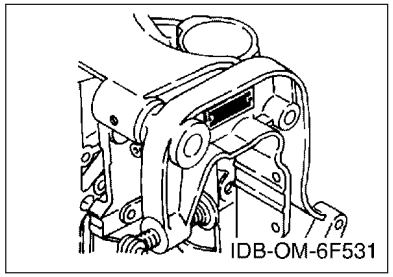

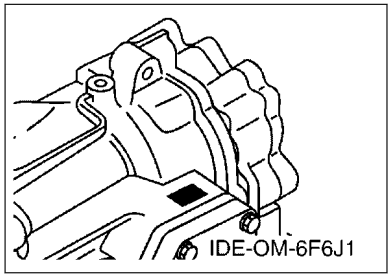

8. Números de serie del motor

Modelo	Nº de serie	Modelo	Nº de serie
E40G	6F6K-1139981	E40J	6J4K-1107560

9. Códigos de color aplicables

Abreviatura	Nombre de color	Código de color
DBN1	DARK BLUISH GRAY 1	008D

10. Informacion para la columna de cantidades

Columna Nº	Nombre de la columna de cantidades	Modelo aplicable
1	E40M	E40GMH
2	40MH	E40JMH
3	E40W	E40GWH
4	40WH	E40JWH
5	40W	E40JW

CONTENTS

SCHEDULED SERVICE PARTS.....1
TOP COWLING.....2
CYLINDER & CRANKCASE.....3
CRANKSHAFT & PISTON.....5
INTAKE.....6
CARBURETOR.....8
FUEL.....9
STARTER.....11
GENERATOR.....13
ELECTRICAL 1.....14
ELECTRICAL 2.....15
ELECTRICAL 3.....16
STARTING MOTOR.....18
BOTTOM COWLING.....19
STEERING.....21
CONTROL 1.....23
CONTROL 2.....24
BRACKET 1.....25
BRACKET 2.....28
UPPER CASING 1.....30
UPPER CASING 2.....31
LOWER CASING & DRIVE 1.....32
LOWER CASING & DRIVE 2.....36
LOWER CASING & DRIVE 3.....38
LOWER CASING & DRIVE 4.....41
FUEL TANK 1.....42
FUEL TANK 2.....43
REMOTE CONTROL BOX.....44
REMOTE CONTROL ASSY.....45
REPAIR KIT 1.....48
REPAIR KIT 2.....50
REPAIR KIT 3.....51

INDEX

NUMERICAL INDEX.....52

CONTENIDO

PARTES DE REPUESTO TEMPORALES..... 1
SOPORTE SUPERIOR..... 2
CYLINDRO & CARTER..... 3
CIGUENAL & PISTON.....5
ADMISION..... 6
CARBURADOR..... 8
COMBUSTIBLE..... 9
ARRANQUE..... 11
GENERADOR.....13
EQUIPO ELECTRICO 1..... 14
EQUIPO ELECTRICO 2..... 15
EQUIPO ELECTRICO 3..... 16
MOTOR DE ARRANQUE..... 18
CUBIERTA INFERIOR..... 19
DIRECCION.....21
CONTROL 1..... 23
CONTROL 2..... 24
SOPORTE 1..... 25
SOPORTE 2..... 28
FUNDA SUPERIOR 1.....30
FUNDA SUPERIOR 2.....31
IMPULSOR E INFERIOR 1..... 32
IMPULSOR E INFERIOR 2..... 36
IMPULSOR E INFERIOR 3..... 38
IMPULSOR E INFERIOR 4..... 41
DEPOSITO DE COMBUSTIBLE 1..... 42
DEPOSITO DE COMBUSTIBLE 2..... 43
CONTROL REMOTO COMPLETO..... 44
CONTROL REMOTO COMPL.....45
ESTUCHE REPARATION 1..... 48
ESTUCHE REPARATION 2..... 50
ESTUCHE REPARATION 3..... 51

INDICE

INDICE NUMERICO..... 52

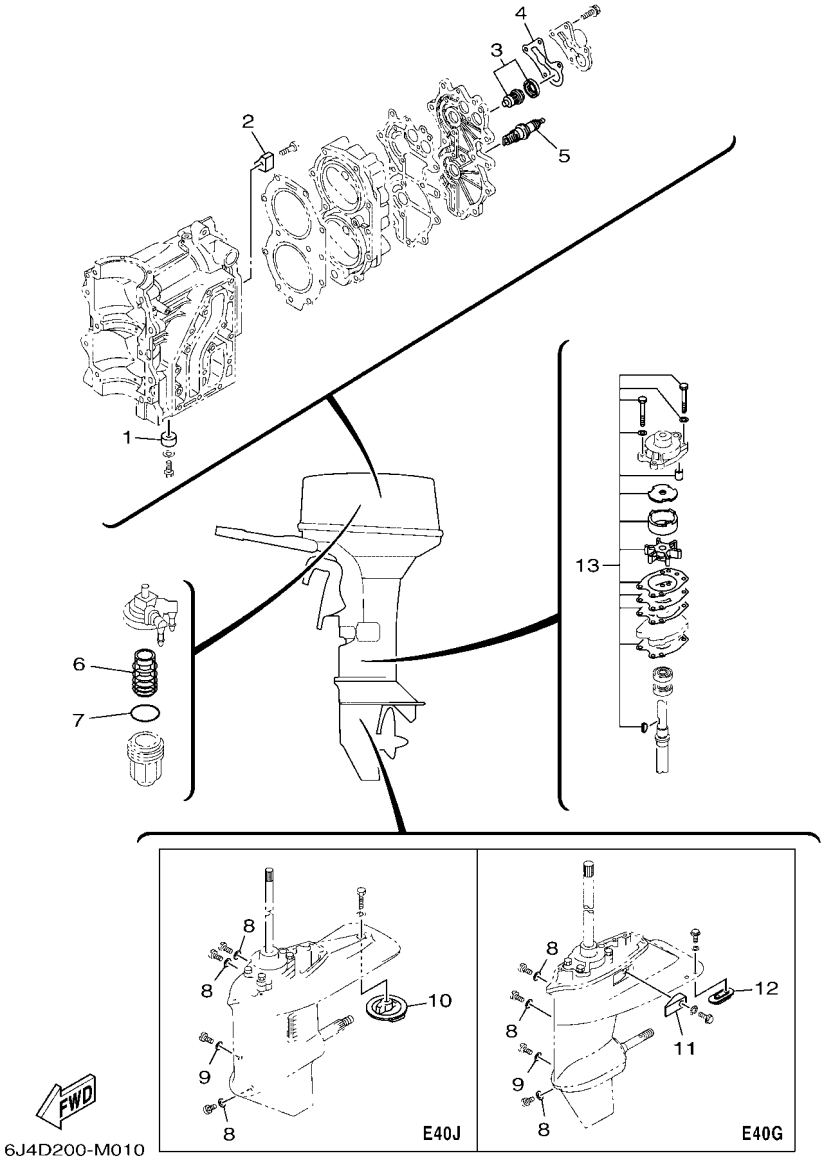

FIG. 1 SCHEDULED SERVICE PARTS — PARTES DE REPUESTO TEMPORALES

REF. NO.	PART NO. CODIGO Nº	DESCRIPTION DESCRIPCION	E40M	40MH	E40W	40WH	40W	REMARKS OBSERVACIONES
1	676–45251–00	ANODE CATODE	1	1	1	1	1	
2	676–11325–00	ANODE ANODO	1	1	1	1	1	
3	6F5–12411–03	THERMOSTAT TERMOSTAT	1	1	1	1	1	
4	6E9–12414–A1	GASKET, COVER EMPAQUE	1	1	1	1	1	
5	94702–00040	PLUG, SPARK (NGK B7HS) BUJIA (NGK B7HS)	2	2	2	2	2	UR EXCEPT E40J-FOR CHN,TWN UR EXCEPT E40J-FOR CHN,TWN
	94702–00272	PLUG, SPARK (NGK BR7HS) BUJIA (NGK BR7HS)		2		2		UR E40J-FOR CHN,TWN UR E40J-FOR CHN,TWN
6	61N–24563–00	ELEMENT, FILTER ELEMENTO DEL FILTRO	1	1	1	1	1	
7	93210–32738	O-RING ANILLO O	1	1	1	1	1	
8	90430–08003	GASKET JUNTA	3	3	3	3	3	
9	90430–06M03	GASKET JUNTA	1	1	1	1	1	
10	679–45371–00	TAB-TRIM QUILLA ESTABILIZADOR		1		1	1	
11	6F5–45251–02	ANODE CATODE	1		1			
12	6E0–45251–12	ANODE CATODE	1		1			
13	6F6–W0078–02	WATER PUMP REPAIR KIT ESTUCHE REPARACION BOMBA AGUA	1		1			E40G E40G
	6J4–W0078–02	WATER PUMP REPAIR KIT ESTUCHE REPARACION BOMBA AGUA		1		1	1	E40J E40J

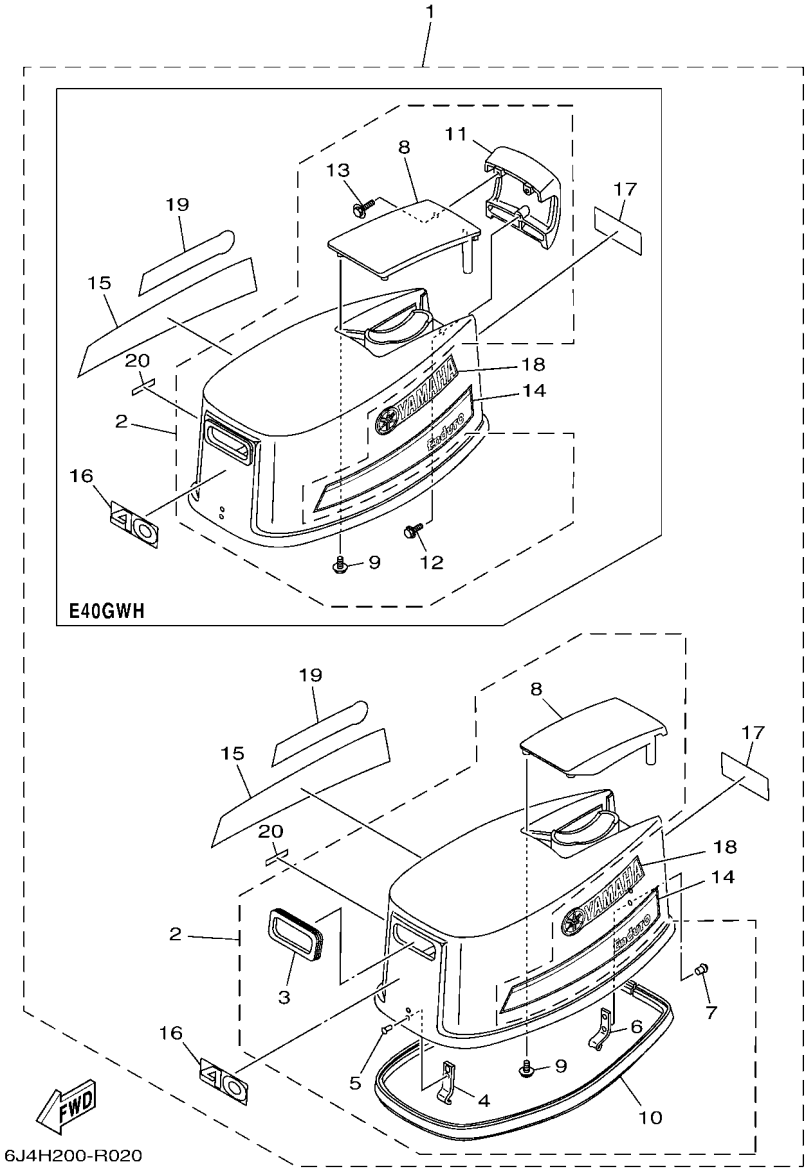

FIG. 2 TOP COWLING — SOPORTE SUPERIOR

REF. NO.	PART NO. CODIGO Nº	DESCRIPTION DESCRIPCION	E40M	40MH	E40W	40WH	40W	REMARKS OBSERVACIONES
1	6J4–42610–12	TOP COWLING ASSY SOPORTE SUPERIOR COMPL.	1	1		1	1	
	6F6–42610–22	TOP COWLING ASSY SOPORTE SUPERIOR COMPL.			1			
2	6F5–4261A–02	.TOP COWLING W/O GRAPHICS .SOPORTE SUPERIOR SIN GRAFICOS	1	1		1	1	
	6F6–4261A–02	.TOP COWLING W/O GRAPHICS .SOPORTE SUPERIOR SIN GRAFICOS			1			
3	6A0–15761–00	..SEAL, RUBBER 1 ..SELLO DE GOMA 1	1	1	1	1	1	
4	6E9–42651–01	..HOOK ..GANCHO	1	1	1	1	1	
5	90266–04M04	..RIVET ..REMACHE	2	2	2	2	2	
6	6F5–42652–01	..HOOK ..GANCHO	1	1	1	1	1	
7	90266–04M01	..RIVET ..REMACHE	2	2	2	2	2	
8	6F5–42613–A0–8D	..MOLDING, AIR DUCT ..MOLDURA CONDUCTO AIRE	1	1		1	1	
	6F6–42613–A0–8D	..MOLDING, AIR DUCT ..MOLDURA CONDUCTO AIRE			1			
9	97E95–06616	..BOLT, HEXAGON W/W DEEP RECESS ..TORNILLO HEXAGONAL CON RONDONA	4	4	4	4	4	
10	6F5–42615–01	..SEAL ..SELLO	1	1	1	1	1	
11	6F6–42612–00	..AIR DUCT, TOP COWLING ..DUCTO DE AIRE CUBIERTA			1			
12	90119–06121	..BOLT, WITH WASHER ..TORNILLO CON ARANDELA			1			
13	97E95–06525	..BOLT, HEXAGON W/W DEEP RECESS ..TORNILLO HEXAGONAL CON RONDONA			2			
14	61N–42675–41	.GRAPHIC, SIDE 1 .CALCAMONIA LATERAL 1	1	1	1	1	1	
15	61N–42676–41	.GRAPHIC, SIDE 2 .CALCAMONIA LATERAL 2	1	1	1	1	1	
16	63D–42678–41	.GRAPHIC, REAR .CALCAMONIA TRASERA	1	1	1	1	1	
17	63D–42678–41	.GRAPHIC, REAR .CALCAMONIA TRASERA	1	1	1	1	1	
18	61R–42681–01	.MARK, COWLING .MARCA DE CUBIERTA	1	1	1	1	1	
19	61R–42681–01	.MARK, COWLING .MARCA DE CUBIERTA	1	1	1	1	1	
20	6X3–44191–00	.INDICATOR, SHIFT .INDICADOR DE CAMBIOS	1	1	1	1	1	

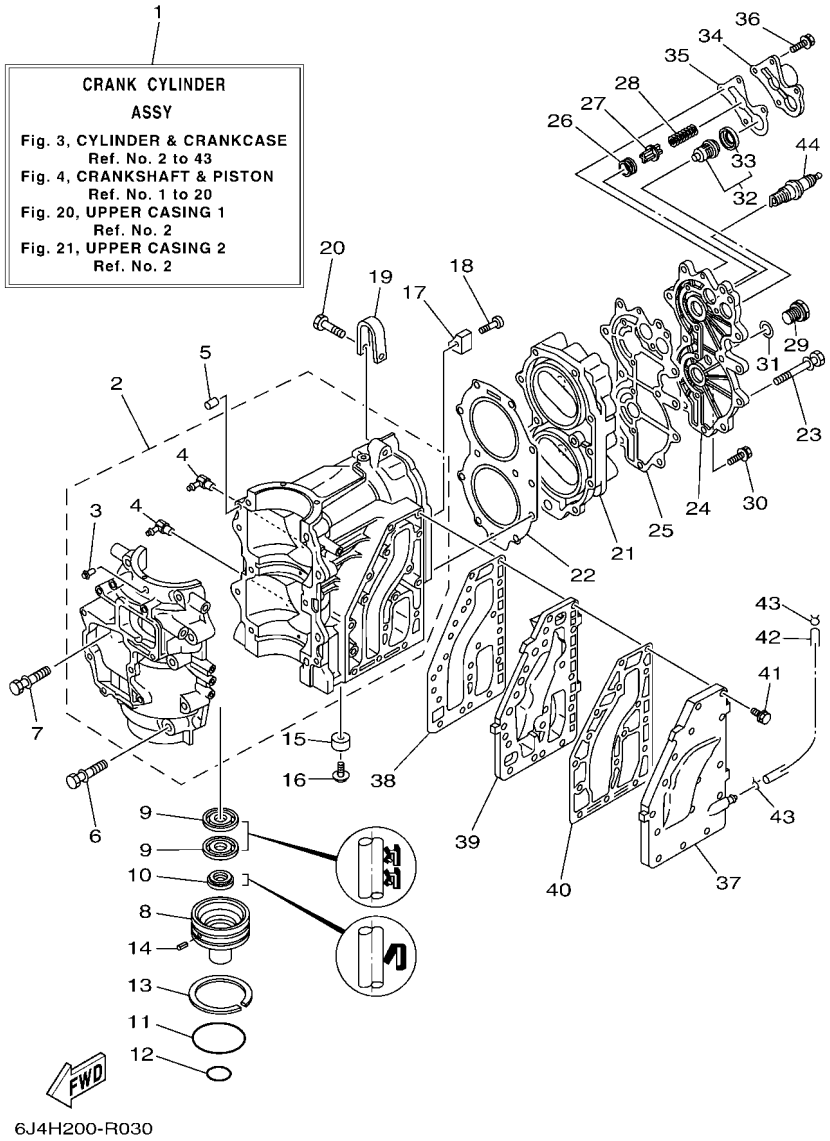

FIG. 3 CYLINDER & CRANKCASE — CYLINDRO & CARTER

REF. NO.	PART NO. CODIGO Nº	DESCRIPTION DESCRIPCION	E40M	40MH	E40W	40WH	40W	REMARKS OBSERVACIONES
1	6F6–W0090–07–1S	CRANK CYLINDER ASSY BLOQUE MOTOR COMPLETO	1	1	1	1	1	
2	6F6–15100–02	CRANKCASE ASSY CARTER COMPLETO	1	1	1	1	1	
3	624–14485–00	.PIPE, JOINT .TUBO DE UNION	1	1	1	1	1	
4	650–11370–01	.CHECK VALVE ASSY .VALVULA DE CONTROL COMPL.	2	2	2	2	2	
5	93608–12063	PIN, DOWEL PASADOR DE CLAVIJA	2	2	2	2	2	
6	90119–10005	BOLT, WITH WASHER TORNILLO CON ARANDELA	9	9	9	9	9	
7	90119–10028	BOLT, WITH WASHER TORNILLO CON ARANDELA	1	1	1	1	1	
8	6F5–15396–01–CA	HOUSING, OIL SEAL CAJA DE SELLO DE ACEITE	1	1	1	1	1	
9	93101–30M33	OIL SEAL SELLO ACEITE	2	2	2	2	2	
10	93104–16M01	OIL SEAL SELLO ACEITE	1	1	1	1	1	
11	93210–65M50	O-RING ANILLO O	1	1	1	1	1	
12	93210–22M02	O-RING ANILLO O	1	1	1	1	1	
13	93440–68M03	CIRCLIP SEGURO	1	1	1	1	1	
14	91690–30010	PIN, SPRING PASADOR DE RESORTE	1	1	1	1	1	
15	676–45251–00	ANODE CATODE	1	1	1	1	1	
16	97E95–06516	BOLT, HEXAGON W/W DEEP RECESS TORNILLO HEXAGONAL CON RONDONA	1	1	1	1	1	
17	676–11325–00	ANODE ANODO	1	1	1	1	1	
18	90152–06M01	SCREW, COUNTERSUNK TORNILLO EMBUTIDO	1	1	1	1	1	
19	6F5–11119–00	HANGER, ENGINE SOPORTE DEL MOTOR	1	1	1	1	1	
20	90101–08001	BOLT TORNILLO	1	1	1	1	1	
21	6F6–11111–00–1S	HEAD, CYLINDER 1 CULATA CILINDRO 1	1	1	1	1	1	
22	6F5–11181–A2	GASKET, CYLINDER HEAD 1 JUNTA, DE CULATA 1	1	1	1	1	1	
23	90119–08MA5	BOLT, WITH WASHER TORNILLO CON ARANDELA	11	11	11	11	11	
24	6F6–11191–00–1S	COVER, CYLINDER HEAD 1 TAPA CULATA DE CILINDRO 1	1	1	1	1	1	
25	6F6–11193–A1	GASKET, HEAD COVER 1 EMPAQUE	1	1	1	1	1	
26	90480–18065	GROMMET TAPON	1	1	1	1	1	
27	663–12416–00	VALVE, PRESSURE CONTROL VALVULA DE CONTROL DE PRESION	1	1	1	1	1	

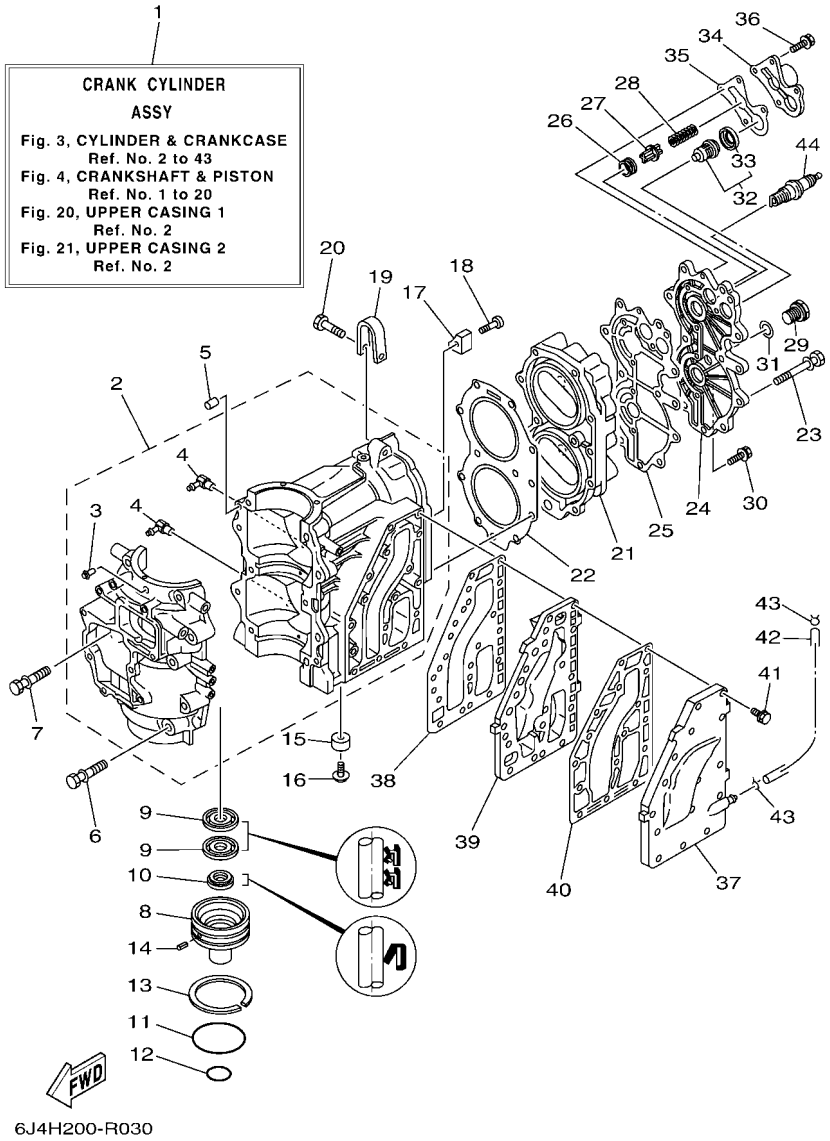

FIG. 3 CYLINDER & CRANKCASE — CYLINDRO & CARTER

REF. NO.	PART NO. CODIGO Nº	DESCRIPTION DESCRIPCION	E40M	40MH	E40W	40WH	40W	REMARKS OBSERVACIONES
28	90501–14M02	SPRING, COMPRESSION RESORTE DE COMPRESION	1	1	1	1	1	
29	90340–14036	PLUG, STRAIGHT SCREW TORNILLO, DE DRENAJE	1	1	1	1	1	
30	90119–06MA3	BOLT, WITH WASHER TORNILLO CON ARANDELA	4	4	4	4	4	
31	90430–14115	GASKET JUNTA	1	1	1	1	1	
32	6F5–12411–03	THERMOSTAT TERMOSTAT	1	1	1	1	1	
33	6E5–12412–00	.SEAL, THERMOSTAT .SELLO TERMOSTATO	1	1	1	1	1	
34	6E9–12413–00–1S	COVER, THERMOSTAT CUBIERTA TERMOSTATO	1	1	1	1	1	
35	6E9–12414–A1	GASKET, COVER EMPAQUE	1	1	1	1	1	
36	90119–06MA4	BOLT, WITH WASHER TORNILLO CON ARANDELA	4	4	4	4	4	
37	6F5–41113–A0–1S	OUTER COVER, EXHAUST CUBOERTA EXTERIOR DE ESCAPE	1	1	1	1	1	
38	6F5–41112–A0	GASKET, EXHAUST INNER COVER EMPAQUE	1	1	1	1	1	
39	6F5–41111–01–1S	INNER COVER, EXHAUST CUBIERTA INTERIOR DE ESCAPE	1	1	1	1	1	
40	6F5–41114–A0	GASKET, EXHAUST OUTER COVER EMPAQUE	1	1	1	1	1	
41	90119–06MA3	BOLT, WITH WASHER TORNILLO CON ARANDELA	16	16	16	16	16	
42	90445–09M37	HOSE (L240) TUBO (L240)	1	1	1	1	1	
43	90467–08004	CLIP PRESILLA	2	2	2	2	2	AP AP
44	94702–00040	PLUG, SPARK (NGK B7HS) BUJIA (NGK B7HS)	2	2	2	2	2	EXCEPT E40J-FOR CHN,TWN EXCEPT E40J-FOR CHN,TWN
	94702–00272	PLUG, SPARK (NGK BR7HS) BUJIA (NGK BR7HS)		2		2		E40J-FOR CHN,TWN E40J-FOR CHN,TWN

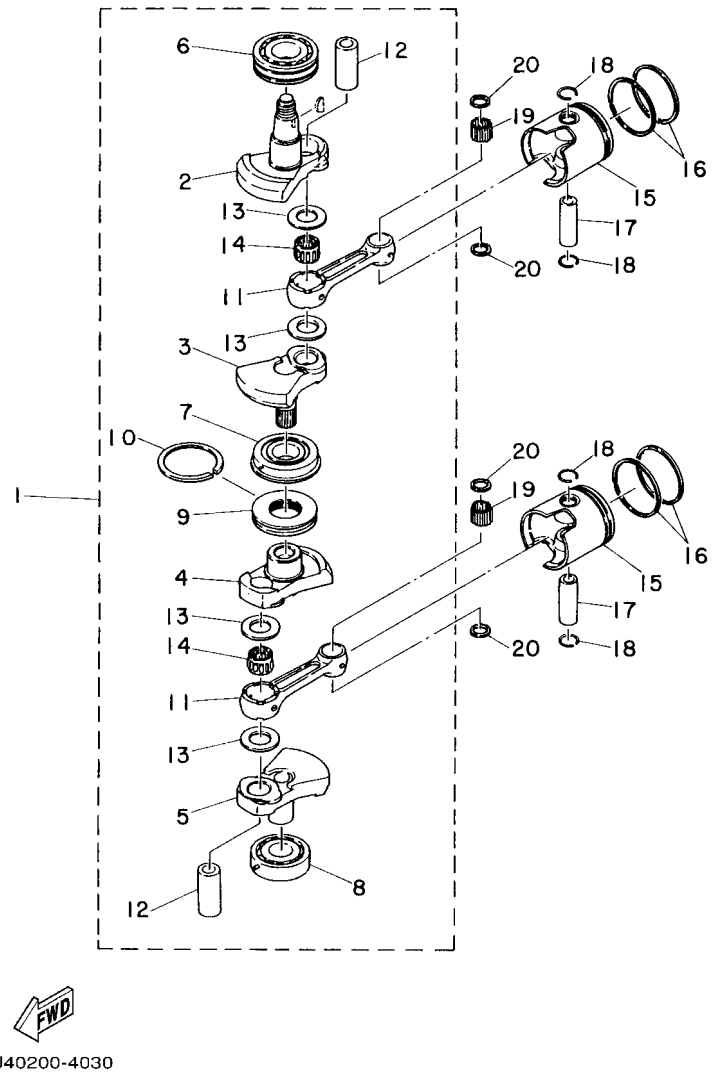

FIG. 4 CRANKSHAFT & PISTON — CIGUENAL & PISTON

REF. NO.	PART NO. CODIGO Nº	DESCRIPTION DESCRIPCION	E40M	40MH	E40W	40WH	40W	REMARKS OBSERVACIONES
1	6F6–11400–02	CRANKSHAFT ASSY CIGUENAL COMPLETO	1	1	1	1	1	
2	6F5–11412–12	.CRANK 1 .MANIVELA 1	1	1	1	1	1	
3	6F5–11422–12	.CRANK 2 .MANIVELA 2	1	1	1	1	1	
4	6F5–11432–12	.CRANK 3 .MANIVELA 3	1	1	1	1	1	
5	6F5–11442–12	.CRANK 4 .MANIVELA 4	1	1	1	1	1	
6	93306–307U0	.BEARING .COJINETE	1	1	1	1	1	
7	93332–000UE	.BEARING .COJINETE	1	1	1	1	1	
8	93306–306U2	.BEARING .COJINETE	1	1	1	1	1	
9	6F5–11515–00	.SEAL, LABYRINTH 1 .SELLO LABERINTO 1	1	1	1	1	1	
10	93440–68M03	.CIRCLIP .SEGURO	1	1	1	1	1	
11	6F5–11651–00	.ROD, CONNECTING .BIELA	2	2	2	2	2	
12	6F5–11681–00	.PIN, CRANK 1 .PASADOR MANIVELA 1	2	2	2	2	2	
13	90209–27012	.WASHER .ARANDELA DE SEPARACION	4	4	4	4	4	
14	93310–727V7	.BEARING .COJINETE DE RODILLOS	2	2	2	2	2	
15	6F6–11631–00–95	PISTON (STD) PISTON (NORMA)	2	2	2	2	2	
	6F6–11635–00	PISTON (0.25MM O/S) PISTON (0.25MM O/S)	2	2	2	2	2	AP AP
	6F6–11636–00	PISTON (0.50MM O/S) PISTON (0.50MM O/S)	2	2	2	2	2	AP AP
16	6F5–11610–00	PISTON RING SET (STD) JUEGO DE AROS (NORMA)	2	2	2	2	2	
	6F5–11610–10	PISTON RING SET (0.25MM O/S) JUEGO DE AROS (0.25MM O/S)	2	2	2	2	2	AP AP
	6F5–11610–20	PISTON RING SET (0.50MM O/S) JUEGO DE AROS (0.50MM O/S)	2	2	2	2	2	AP AP
17	6F5–11633–00	PIN, PISTON PASADOR, PISTON	2	2	2	2	2	
18	663–11634–00	CLIP, PISTON PIN PRESILLA, BULON DE PISTON	4	4	4	4	4	
19	93603–21111	PIN, DOWEL PASADOR DE CLAVIJA	56	56	56	56	56	
20	90201–20417	WASHER, PLATE ARANDELA PLANA	4	4	4	4	4	

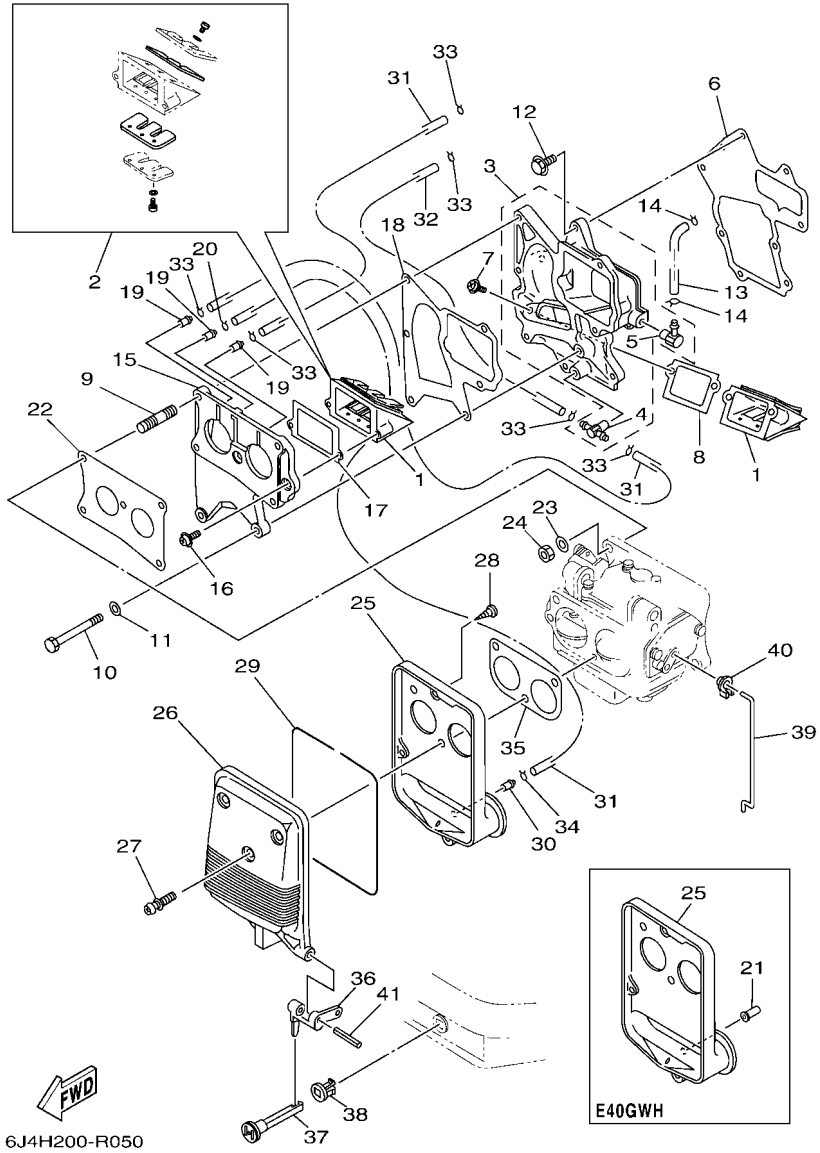

FIG. 5 INTAKE — ADMISION

REF. NO.	PART NO. CODIGO Nº	DESCRIPTION DESCRIPCION	E40M	40MH	E40W	40WH	40W	REMARKS OBSERVACIONES
1	6F6–13610–00	REED VALVE ASSY VALVULA DE LAMINAS COMPLETA	2	2	2	2	2	
2	692–W0004–00	.REED SET .JUEGO DE VALVULAS DE LENGUETA	1	1	1	1	1	
3	6F6–13641–00–1S	MANIFOLD, INTAKE 1 CONECTOR DE ADMISSION 1	1	1	1	1	1	
4	6F6–11370–01	.CHECK VALVE ASSY .VALVULA DE CONTROL COMPL.	1	1	1	1	1	
5	650–11370–01	.CHECK VALVE ASSY .VALVULA DE CONTROL COMPL.	1	1	1	1	1	
6	6F5–13646–A2	GASKET, MANIFOLD 2 EMPAQ. DE MULTIPLE 2	1	1	1	1	1	
7	97980–05114	SCREW, WITH WASHER TORNILLO, CON ARANDELA	2	2	2	2	2	
8	6F5–13621–A1	GASKET, VALVE SEAT JUNTA, DE VALV.DE EMPAQUE	1	1	1	1	1	
9	90116–06M17	BOLT, STUD ESPARRAGO	4	4	4	4	4	
10	97013–06065	BOLT PERNO	2	2	2	2	2	
11	92903–06600	WASHER, PLATE RONDANA SENCILLA	2	2	2	2	2	
12	97513–06525	BOLT, WITH WASHER PERNO CON ARANDELA	7	7	7	7	7	
13	90445–07254	HOSE (L118) TUBO (L118)	1	1	1	1	1	
14	90467–06016	CLIP PRESILLA	2	2	2	2	2	
15	6F6–13643–01–1S	COVER, MANIFOLD CUBIERTA DE COLECTOR	1	1	1	1	1	
16	97980–05114	SCREW, WITH WASHER TORNILLO, CON ARANDELA	2	2	2	2	2	
17	6F5–13621–A1	GASKET, VALVE SEAT JUNTA, DE VALV.DE EMPAQUE	1	1	1	1	1	
18	6F5–13645–A1	GASKET, MANIFOLD 1 EMPAQUE	1	1	1	1	1	
19	624–14485–00	PIPE, JOINT TUBO DE UNION	3	3	3	3	3	
20	90467–06016	CLIP PRESILLA	1	1		1	1	
21	647–14395–61	CAP, OVERFLOW PIPE TAPA DE TUBO REBOSAMIENTO			1			
22	6F5–14198–A1	GASKET EMPAQUE	1	1	1	1	1	
23	92995–06600	WASHER ARANDELA	4	4	4	4	4	
24	95380–06600	NUT, HEXAGON TUERCA	4	4	4	4	4	
25	6F5–14417–00	COVER 1 CUBIERTA 1	1	1	1	1	1	
26	6F5–14418–00	COVER 2 CUBIERTA 2	1	1	1	1	1	
27	90159–06M01	SCREW, WITH WASHER TORNILLO CON VALONA	3	3	3	3	3	

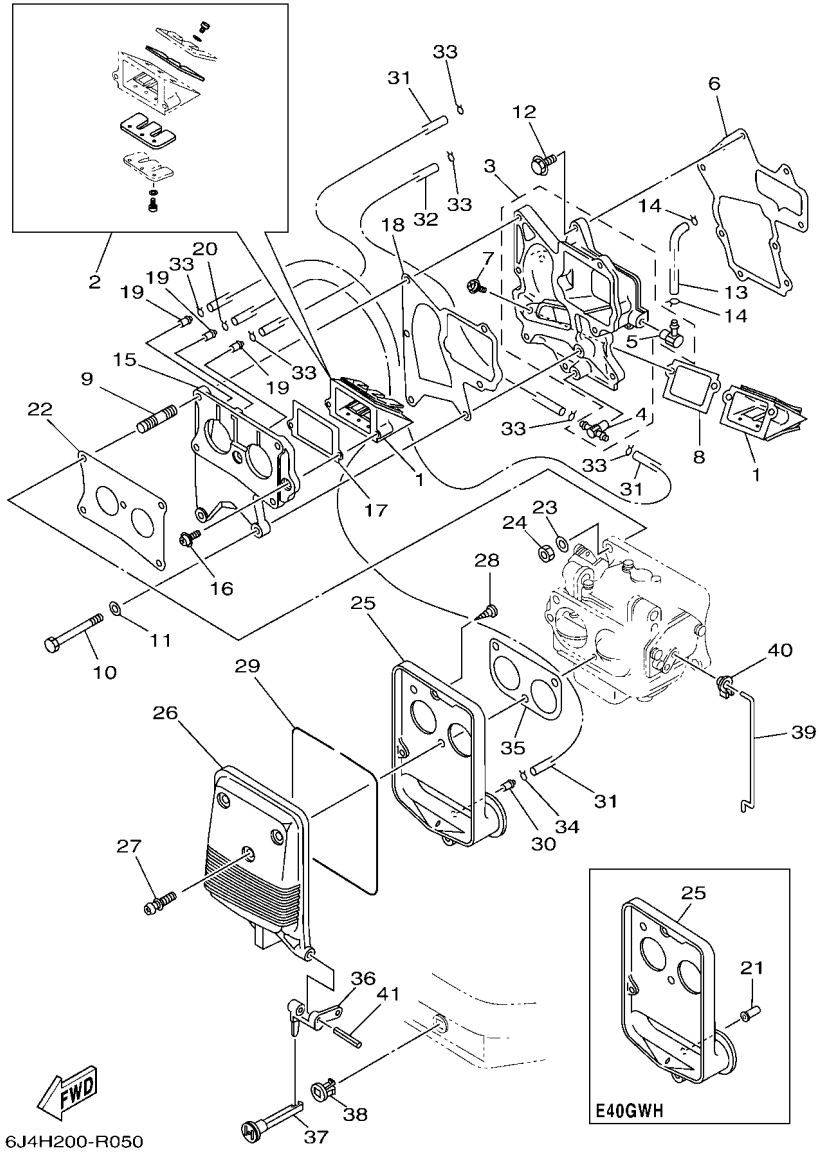

FIG. 5 INTAKE — ADMISION

REF. NO.	PART NO. CODIGO Nº	DESCRIPTION DESCRIPCION	E40M	40MH	E40W	40WH	40W	REMARKS OBSERVACIONES
28	97780–50716	SCREW, TAPPING TORNILLO DE CABEZA DE CONO ACH	4	4	4	4	4	
29	6F5–14476–00	SEAL SELLO	1	1	1	1	1	
30	624–14485–00	PIPE, JOINT TUBO DE UNION	1	1		1	1	
31	90445–07240	HOSE (L330) TUBO (L330)	3	3		3	3	
	90445–07240	HOSE (L330) TUBO (L330)			2			
32	90445–07M24	HOSE (L240) TUBO (L240)	1	1	1	1	1	
33	90467–06016	CLIP PRESILLA	6	6	6	6	6	
34	90467–06016	CLIP PRESILLA	1	1		1	1	
35	6F5–14483–00	GASKET EMPAQUE	1	1	1	1	1	
36	6F5–41252–00	LEVER, CHOKE 1 PALANCA AHOGADOR 1	1	1	1	1	1	
37	682–41271–01	KNOB, CHOKE PERILLA AHOGADOR	1	1	1	1	1	
38	689–41273–00	GROMMET TAPON PROTECTOR	1	1	1	1	1	
39	6F6–41256–00	ROD, CHOKE 1 VARILLA DE AHOGADOR	1	1	1	1	1	
40	661–41262–02	JOINT, CHOKE LEVER CONECTOR DE AHOGADOR	2	2	2	2	2	
41	91690–40032	PIN, SPRING PASADOR DE RESORTE	1	1	1	1	1	

FIG. 6 CARBURETOR — CARBURADOR

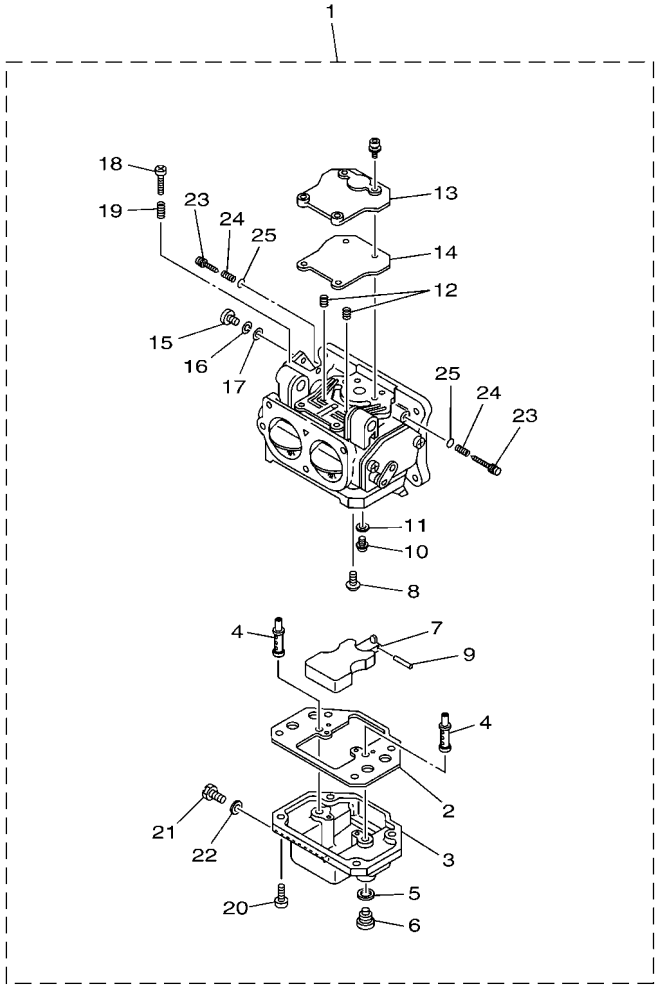

6J46200-F050

REF. NO.	PART NO. CODIGO Nº	DESCRIPTION DESCRIPCION	E40M	40MH	E40W	40WH	40W	REMARKS OBSERVACIONES
1	6F6–14301–07	CARBURETOR ASSY 1 CARBURADOR COMPLETO 1	1	1	1	1		E40G,E40J E40G,E40J
	6J4–14301–06	CARBURETOR ASSY 1 CARBURADOR COMPLETO 1					1	E40J E40J
2	6F5–14384–01	.GASKET, FLOAT CHAMBER .EMPAQUE DE CAMARA DE BOIA	1	1	1	1	1	
3	6F6–14381–00	.BODY, FLOAT CHAMBER .CUERPO DE CAMARA DE BOIA	1	1	1	1	1	
4	6F6–14341–00	.NOZZLE, MAIN .BOQUILLA PRINCIPAL	2	2	2	2	2	
5	1J2–14398–00	.GASKET .EMPAQUE	2	2	2	2	2	
6	677–14343–75	.JET, MAIN (#150) .INYECTOR PRINCIPAL (#150)	2	2	2	2	2	
7	6F6–14385–00	.FLOAT .BOIA	1	1	1	1	1	
8	98980–04006	.SCREW, BIND .TORNILLO DE LIGAR	1	1	1	1	1	
9	6E5–14386–01	.PIN, FLOAT .PASADOR DE BOIA	1	1	1	1	1	
10	6F5–14390–21	.NEEDLE VALVE ASSY .VALVULA DE AGUJA COMPLETA	1	1	1	1	1	
11	367–14195–00	.GASKET .ARANDELA DE VALVULA DE AGUJA	1	1	1	1	1	
12	647–14342–45	.JET, PILOT (# 90) .ESPREA DE PILOTO (# 90)	2	2	2	2	2	
13	6F6–14383–00	.PLATE .TORNILLO DE DRENAJE	1	1	1	1	1	
14	6F5–14398–01	.GASKET .EMPAQUE	1	1	1	1	1	
15	97890–05010	.SCREW, PAN HEAD .TORNILLO	1	1	1	1	1	
16	92990–05100	.WASHER, SPRING .ARANDELA PLANA	1	1	1	1	1	
17	92990–05600	.WASHER, PLATE .ARANDELA PLANA	1	1	1	1	1	
18	650–14321–01	.SCREW, THROTTLE .TORNILLO DE OBTURADOR	1	1	1	1	1	
19	647–14334–00	.SPRING .RESORTE DE AJUSTADOR DE AIRE	1	1	1	1	1	
20	97603–05117	.SCREW, PAN HEAD WITH WASHER .TORNILLO	4	4	4	4	4	
21	6F5–14383–10	.SCREW, DRAIN .TORNILLO DE DRENAJE	1	1	1	1	1	
22	6F6–14398–00	.GASKET .EMPAQUE	1	1	1	1	1	
23	6F5–14323–01	.SCREW, AIR ADJUSTING .TORNILLO DE AJUSTE DE AIRE	2	2	2	2	2	
24	6F5–14334–01	.SPRING, AIR ADJUSTING .RESORTE DE AJUSTADOR DE AIRE	2	2	2	2	2	
25	5Y1–14397–01	.O-RING .ANILLO O	2	2	2	2	2	

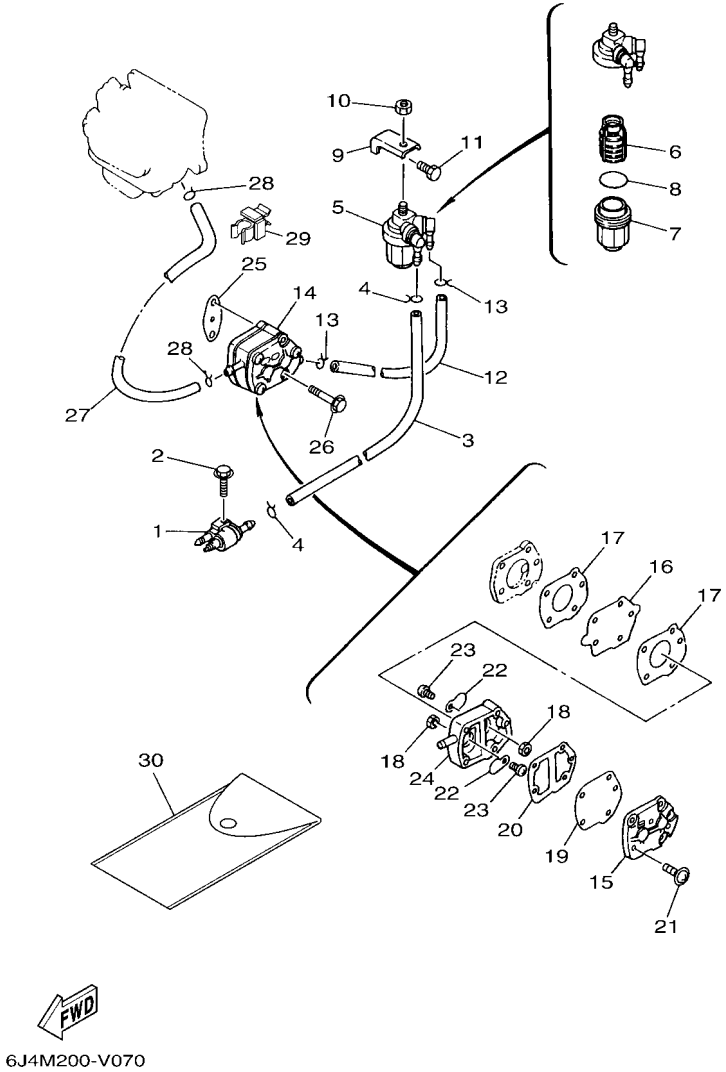

FIG. 7 FUEL — COMBUSTIBLE

REF. NO.	PART NO. CODIGO Nº	DESCRIPTION DESCRIPCION	E40M	40MH	E40W	40WH	40W	REMARKS OBSERVACIONES
1	6G1–24304–11	FUEL PIPE JOINT COMP. 1 CONECTOR MANGUERA COMBUST.1	1	1	1	1	1	
2	97E95–06525	BOLT, HEXAGON W/W DEEP RECESS TORNILLO HEXAGONAL CON RONDONA	1	1	1	1	1	
3	90445–09226	HOSE (L390) TUBO (L390)	1	1	1	1	1	
4	90467–08004	CLIP PRESILLA	2	2	2	2	2	
5	61N–24560–00	FILTER ASSY FILTRO COMPLETO	1	1	1	1	1	
6	61N–24563–00	.ELEMENT, FILTER .ELEMENTO DEL FILTRO	1	1	1	1	1	
7	61N–24521–00	.CUP, FILTER .COPA DE FILTRO	1	1	1	1	1	
8	93210–32738	.O-RING .ANILLO O	1	1	1	1	1	
9	648–24566–02	BRACKET, FILTER SOPORTE DEL FILTRO	1	1	1	1	1	
10	95380–08600	NUT TUERCA	1	1	1	1	1	
11	97013–06014	BOLT PERNO	1	1	1	1	1	
12	90445–09090	HOSE (L185) TUBO (L185)	1	1	1	1	1	
13	90467–08004	CLIP PRESILLA	2	2	2	2	2	
14	692–24410–01	FUEL PUMP ASSY BOMBA DE COMBUSTIBLE COMPLETA	1	1	1	1	1	
15	6A0–24413–00	.BODY 2 .CUERPO 2	1	1	1	1	1	
16	692–24411–00	.DIAPHRAGM .DIAFRAGMA	1	1	1	1	1	
17	648–24434–01	.GASKET, BODY .EMPAQUE	2	2	2	2	2	
18	95380–03600	.NUT .TUERCA	2	2	2	2	2	
19	663–24411–00	.DIAPHRAGM .DIAFRAGMA	1	1	1	1	1	
20	648–24435–03	.GASKET, BODY 2 .EMPAQUE	1	1	1	1	1	
21	97980–05128	.SCREW, WITH WASHER .TORNILLO, CON ARANDELA	3	3	3	3	3	
22	6A0–24421–01	.VALVE, CHECK .VALVULA DE RETENCION	2	2	2	2	2	
23	6A0–14325–00	.SCREW, PAN HEAD .TORNILLO CABEZA REDONDA	2	2	2	2	2	
24	6A0–24412–02	.BODY 1 .CUERPO 1	1	1	1	1	1	
25	650–24431–A0	GASKET, FUEL PUMP 1 EMPAQUE BOMBA COMBUST 1	1	1	1	1	1	
26	97E95–06540	BOLT, HEXAGON W/W DEEP RECESS TORNILLO HEXAGONAL CON RONDONA	2	2	2	2	2	
27	90445–09090	HOSE (L185) TUBO (L185)	1	1	1	1	1	

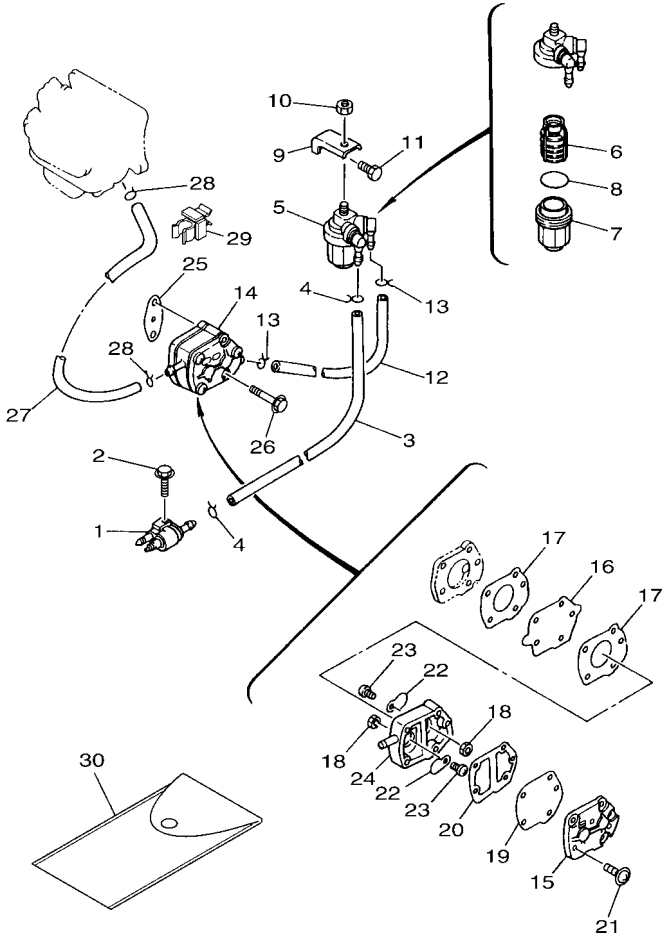

6J4M200-V070

FIG. 7 FUEL — COMBUSTIBLE

REF. NO.	PART NO. CODIGO Nº	DESCRIPTION DESCRIPCION	E40M	40MH	E40W	40WH	40W	REMARKS OBSERVACIONES
28	90467–08004	CLIP PRESILLA	2	2	2	2	2	
29	90464–07008	CLAMP BRIDA	1	1	1	1	1	
30	656–W2810–03	TOOL KIT JUEGO DE HERRAMIENTAS	1	1	1	1	1	

FIG. 8 STARTER ARRANQUE

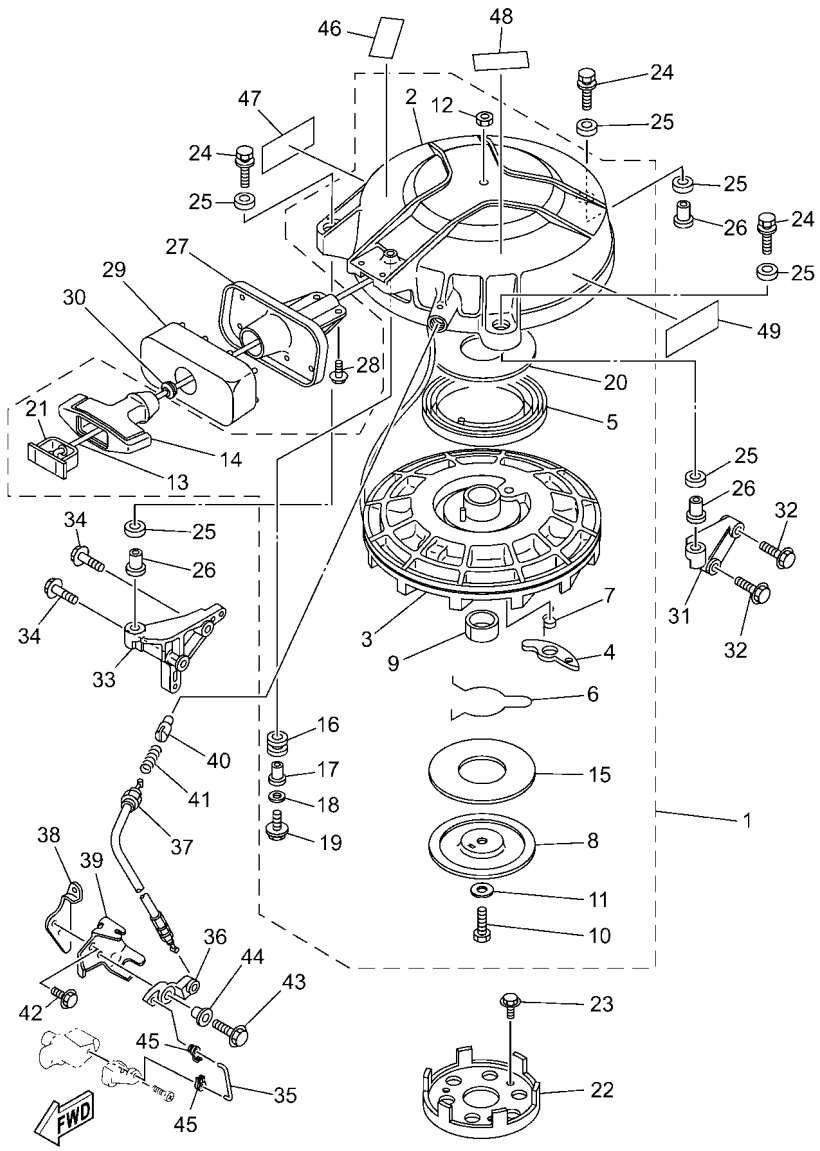

6F6S200-Y080

*1:CUT FROM 50M ROLLS,PART NO.90890-44373,CUTTING LENGTH 1.9M

*1:CORTE DE UN RODILLO DE 50M , PARTS NUMERO 90890-44373, LARGO DEL CORTE 1.9M

REF. NO.	PART NO. CODIGO Nº	DESCRIPTION DESCRIPCION	E40M	40MH	E40W	40WH	40W	REMARKS OBSERVACIONES
1	6F5–W1571–05	STARTER ASSY ARRANQUE COMPLETO	1	1	1	1	1	
2	6F5–15711–02	.CASE, STARTER .CAJA DE ARRANQUE	1	1	1	1	1	
3	6F5–15714–03	.DRUM, SHEAVE .TAMBOR ROLDANA	1	1	1	1	1	
4	6F5–15741–01	.PAWL, DRIVE .TRINQUETE DE TRACCION	1	1	1	1	1	
5	6F5–15713–00	.SPRING, STARTER .RESORTE DE ARRANQUE	1	1	1	1	1	
6	6F5–15715–00	.SPRING, FRICTION .RESORTE PLACA DE TRACCION	1	1	1	1	1	
7	6F5–15734–01	.SPRING, RETURN .RESORTE DE RETORNO	1	1	1	1	1	
8	6F5–15716–01	.PLATE, DRIVE .PLACA DE TRACCION	1	1	1	1	1	
9	6F5–15754–00	.BUSH 2 .BUJE 2	1	1	1	1	1	
10	97013–08030	.BOLT .PERNO	1	1	1	1	1	
11	6F5–15726–01	.WASHER, FLAT .ARANDELA PLANA	1	1	1	1	1	
12	95303–08700	.NUT .TUERCA	1	1	1	1	1	
13	*	.WIRE (L:1900MM) .CABLE (L:1900MM)	1	1	1	1	1	*1 *1
14	689–15755–02	.HANDLE, STARTER .MANIJA DE ARRANQUE	1	1	1	1	1	
15	6F5–15764–00	.COLLAR 1 .COLLAR 1	1	1	1	1	1	
16	6F5–15752–00	.ROLLER, WIRE .RODILLO DE CUERDA	1	1	1	1	1	
17	6F5–15753–01	.BUSH .BUJE	1	1	1	1	1	
18	6F5–15791–01	.WASHER, LOCK .EMBLEMA	1	1	1	1	1	
19	6F5–15768–01	.BOLT .TORNILLO	1	1	1	1	1	
20	6F5–15739–00	.WASHER, THRUST .ARANDELA DE EMPUJE AXIAL	1	1	1	1	1	
21	6F5–15779–02	.COVER .CUBIERTA	1	1	1	1	1	
22	6F5–15723–01	PULLEY, STARTER POLEA DE ARRANQUE	1	1	1	1	1	
23	90105–08M10	BOLT, FLANGE TORNILLO	3	3	3	3	3	
24	90119–08M10	BOLT, WITH WASHER TORNILLO CON ARANDELA	3	3	3	3	3	
25	90385–12M04	BUSH BUJE	6	6	6	6	6	
26	90387–08M05	COLLAR ESPACIADOR	3	3	3	3	3	
27	6A0–15758–01–8D	GUIDE, WIRE GUIA DE CABLE	1	1	1	1	1	

FIG. 8 STARTER ARRANQUE

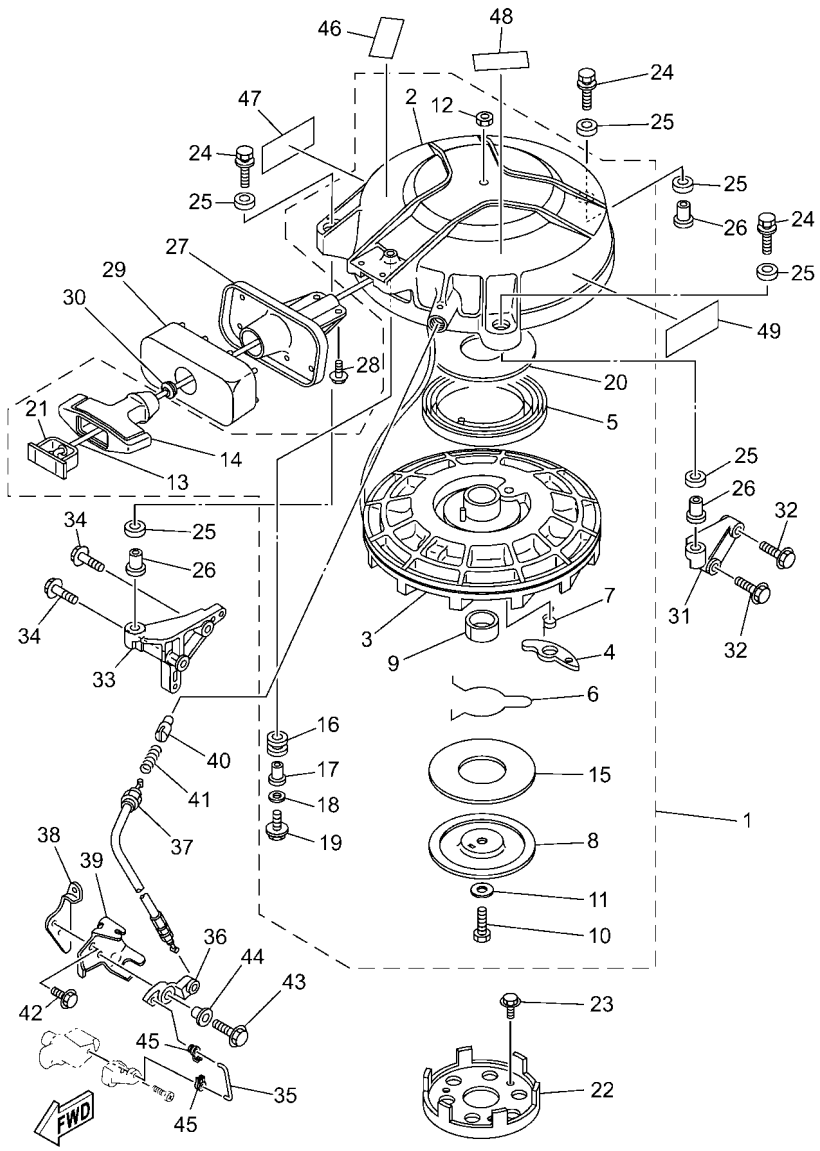

6F6S200-Y080

*1:CUT FROM 50M ROLLS,PART NO.90890-44373,CUTTING LENGTH 1.9M

*1:CORTE DE UN RODILLO DE 50M , PARTS NUMERO 90890-44373, LARGO DEL CORTE 1.9M

REF. NO.	PART NO. CODIGO Nº	DESCRIPTION DESCRIPCION	E40M	40MH	E40W	40WH	40W	REMARKS OBSERVACIONES
28	97E95–06516	BOLT, HEXAGON W/W DEEP RECESS TORNILLO HEXAGONAL CON RONDONA	2	2	2	2	2	
29	6A0–15762–01	SEAL, RUBBER 2 SELLO DE GOMA 2	1	1	1	1	1	
30	6A0–15789–01	DAMPER AMORTIGUADOR	1	1	1	1	1	
31	6F5–15771–00–94	STAY 1 SOPORTE 1	1	1	1	1	1	
32	97513–08535	BOLT, WITH WASHER PERNO CON ARANDELA	2	2	2	2	2	
33	6F5–15772–00–94	STAY 2 SOPORTE 2	1	1	1	1	1	
34	97513–08535	BOLT, WITH WASHER PERNO CON ARANDELA	2	2	2	2	2	
35	6F5–15747–00	LINK ESLABON	1	1	1	1	1	
36	6F5–15746–00	ARM BRAZO	1	1	1	1	1	
37	6F5–15770–00	CABLE COMP., STARTER STOP CABLECOMPL DE SEGURO ARRANQUE	1	1	1	1	1	
38	6F5–15773–00	STAY 3 SOPORTE 3	1	1	1	1	1	
39	6F5–15774–00	STAY 4 SOPORTE 4	1	1	1	1	1	
40	656–15748–00	PLUNGER, STARTER STOP EMBOLO SEGURO DE ARRANQUE	1	1	1	1	1	
41	90501–10227	SPRING, COMPRESSION RESORTE DE COMPRESION	1	1	1	1	1	
42	97E95–06516	BOLT, HEXAGON W/W DEEP RECESS TORNILLO HEXAGONAL CON RONDONA	1	1	1	1	1	
43	97E95–06530	BOLT, HEXAGON W/W DEEP RECESS TORNILLO HEXAGONAL CON RONDONA	1	1	1	1	1	
44	90387–06M29	COLLAR ESPACIADOR	1	1	1	1	1	
45	661–41262–02	JOINT, CHOKE LEVER CONECTOR DE AHOGADOR	2	2	2	2	2	
46	6EE–81994–40	LABEL, SAFETY ETIQUETA DE SEGURIDAD	1	1	1	1	1	
47	6EE–81994–50	LABEL, SAFETY ETIQUETA DE SEGURIDAD	1					FOR AFR FOR AFR
48	6EE–81995–40	LABEL, WARNING ETIQUETA DE PRECAUCION	1	1	1	1	1	
49	6EE–81995–50	LABEL, WARNING ETIQUETA DE PRECAUCION	1					FOR AFR FOR AFR

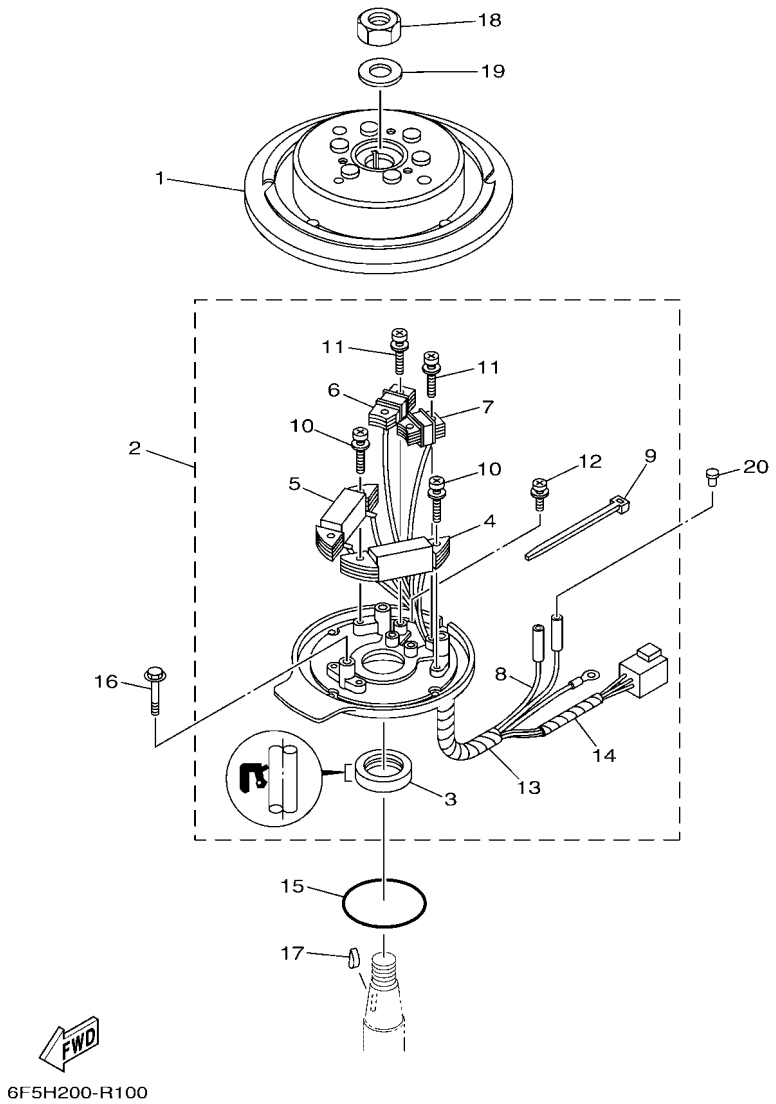

FIG. 9 GENERATOR — GENERADOR

REF. NO.	PART NO. CODIGO Nº	DESCRIPTION DESCRIPCION	E40M	40MH	E40W	40WH	40W	REMARKS OBSERVACIONES
1	6F5–85550–G1	ROTOR ASSY ROTOR COMPLETO	1	1				
	6F6–85550–B1	ROTOR ASSY ROTOR COMPLETO			1	1	1	
2	6F5–85560–B1	BASE ASSY CONJUNTO BASE	1	1	1	1	1	
3	93102–35M18	.OIL SEAL .SELLO ACEITE	1	1	1	1	1	
4	6F5–85520–11	.COIL, CHARGE .BOBINA DE CARGA	1	1	1	1	1	
5	6F5–85533–10	.COIL, LIGHTING .BOBINA DE LUZ	1	1	1	1	1	
6	6F5–85580–10	.COIL, PULSER .BOBINA DE PULSACION	1	1	1	1	1	
7	6F5–85580–20	.COIL, PULSER .BOBINA DE PULSACION	1	1	1	1	1	
8	6F5–85515–10	.LEAD WIRE ASSY .CABLE CONDUCTOR COMPLETO	1	1	1	1	1	
9	6F5–81328–00	.CLAMP .GRAMPA	1	1	1	1	1	
10	90159–05040	.SCREW, WITH WASHER .TORNILLO CON VALONA	4	4	4	4	4	
11	90159–04063	.SCREW, WITH WASHER .TORNILLO CON VALONA	4	4	4	4	4	
12	90159–04035	.SCREW, WITH WASHER .TORNILLO CON VALONA	1	1	1	1	1	
13	6F5–85597–J0	.TUBE 1 .TUBO 1	1	1	1	1	1	
14	6F5–85597–H0	.TUBE 1 .TUBO 1	1	1	1	1	1	
15	93210–75M51	O-RING ANILLO O	1	1	1	1	1	
16	97E95–06540	BOLT, HEXAGON W/W DEEP RECESS TORNILLO HEXAGONAL CON RONDONA	3	3	3	3	3	
17	90280–05015	KEY, WOODRUFF CUNA WOODRUFF	1	1	1	1	1	
18	90170–20137	NUT TUERCA	1	1	1	1	1	
19	90201–21M18	WASHER, PLATE ARANDELA PLANA	1	1	1	1	1	
20	703–82119–01	COVER, LEAD WIRE CUBIERTA DE CABLE CONDUCTOR	2	2				

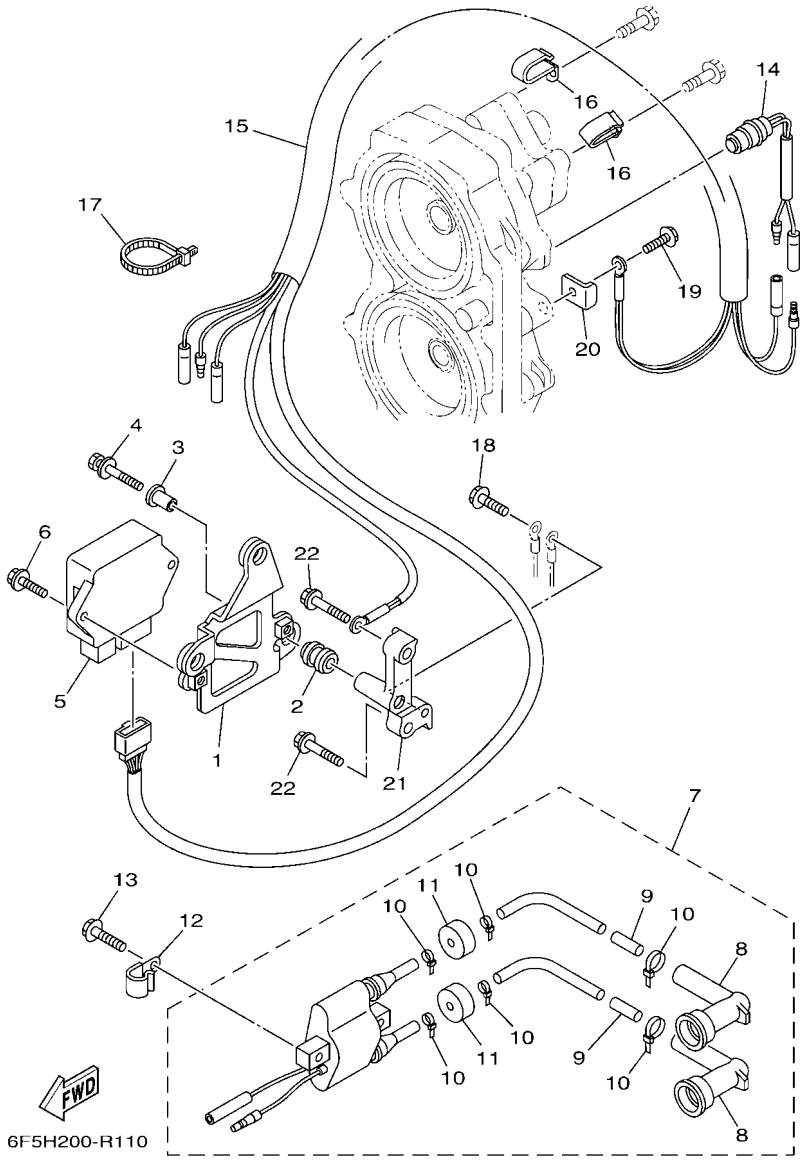

FIG. 10 ELECTRICAL 1 — EQUIPO ELECTRICO 1

REF. NO.	PART NO. CODIGO Nº	DESCRIPTION DESCRIPCION	E40M	40MH	E40W	40WH	40W	REMARKS OBSERVACIONES
1	6F5–85542–10	BRACKET SOPORTE	1	1	1	1	1	
2	61N–82317–01	DAMPER, IGNITION COIL AMORTIGUADOR BOBINA ENCENDIDO	3	3	3	3	3	
3	90387–06119	COLLAR ESPACIADOR	3	3	3	3	3	
4	90119–06290	BOLT, WITH WASHER TORNILLO CON ARANDELA	3	3	3	3	3	
5	6F6–85540–03	C.D.I. UNIT ASSY UNIDAD C.D.I. COMPLETA	1	1	1	1	1	
6	90109–06M86	BOLT PERNO	2	2	2	2	2	
7	6F6–85530–01	IGNITION COIL ASSY BOBINA DE IGNICION COMPLETO	1	1	1	1	1	
8	62E–82371–11	.CAP, PLUG .TAPON DE BUJIA COMPLT	2	2	2	2	2	
9	62E–8231X–00	.TERMINAL 1 .TERMINAL 1	2	2	2	2	2	
10	90465–11M10	.CLAMP .BRIDA	6	6	6	6	6	
11	90480–25161	.GROMMET .TAPON	2	2	2	2	2	
12	90465–08M07	CLAMP BRIDA	1	1	1	1	1	
13	97E95–06525	BOLT, HEXAGON W/W DEEP RECESS TORNILLO HEXAGONAL CON RONDONA	2	2	2	2	2	
14	688–82560–10	THERMO SWITCH ASSY INTER. DE TERMO	1	1	1	1	1	
15	6F5–82580–00	WIRE HARNESS ASSY 2 CONJUNTO DE CABLES 2	1	1				
16	90462–08096	CLAMP BRIDA	2	2				
17	90465–13M18	CLAMP BRIDA	2	2				
18	97E95–06516	BOLT, HEXAGON W/W DEEP RECESS TORNILLO HEXAGONAL CON RONDONA	1	1				
19	97E95–06516	BOLT, HEXAGON W/W DEEP RECESS TORNILLO HEXAGONAL CON RONDONA	1	1	1	1	1	
20	6F5–82588–00	PLATE PLACA	1	1	1	1	1	
21	6F5–81948–A0	BRACKET SOPORTE	1	1				
22	90105–08M35	BOLT, FLANGE TORNILLO	2	2				

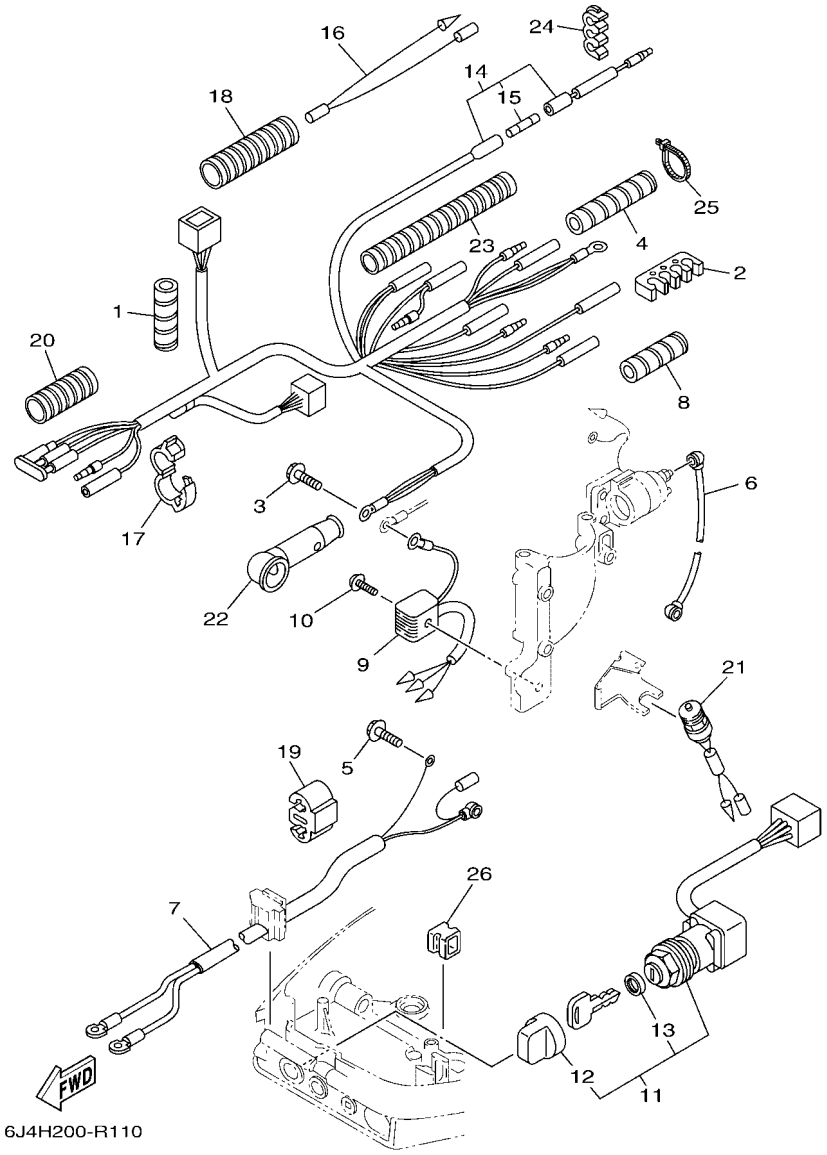

FIG. 11 ELECTRICAL 2 — EQUIPO ELECTRICO 2

REF. NO.	PART NO. CODIGO Nº	DESCRIPTION DESCRIPCION	E40M	40MH	E40W	40WH	40W	REMARKS OBSERVACIONES
1	90446–10M02	HOSE TUBO RESEIRADERO			1	1		
2	90464–07M06	CLAMP BRIDA			1	1		
3	97E95–06516	BOLT, HEXAGON W/W DEEP RECESS TORNILLO HEXAGONAL CON RONDONA			1	1		
4	90446–10M01	HOSE (L60) TUBO (L60)			1	1		
5	97E95–08516	BOLT, HEXAGON W/W DEEP RECESS TORNILLO HEXAGONAL CON RONDONA			1	1		
6	6F5–82117–01	WIRE, LEAD CABLE CONDUCTOR			1	1		
7	6F5–82105–01	BATTERY CABLE CABLE DE BATERIA			1	1		
8	90446–10M02	HOSE TUBO RESEIRADERO			2	2		
9	6F5–81970–62	RECTIFIER ASSY RECTIFICADOR COMPLETO			1	1		
10	97980–05225	SCREW, WITH WASHER TORNILLO, CON ARANDELA			1	1		
11	6F5–82510–11	MAIN SWITCH ASSY CONJUNTO DE LLAVE IGNICION			1	1		
12	676–82577–01	.CAP, KEY .TAPA			1	1		
13	703–82532–00	.CAP .TAPA			1	1		
14	6F5–82590–31	WIRE HARNESS ASSY CONJUNTO DE CABLES			1	1		
15	663–82151–01	.FUSE (12V-20A) .FUSIBLE (12V-20A)			1	1		
16	6F6–82509–00	WIRE, SUB LEAD CABLE SUBCONDUCTOR			1	1		
17	90464–16003	CLAMP BRIDA			1	1		
18	6G1–83557–00	TUBE ENCHUFE DE ACEITE			1	1		
19	90464–06006	CLAMP BRIDA			1	1		
20	6G5–83557–00	TUBE ENCHUFE DE ACEITE			1	1		
21	6F5–82540–01	NEUTRAL SWITCH ASSY INTERRUPTOR NEUTRAL COMPL			1	1		
22	61A–82119–00	COVER, LEAD WIRE CUBIERTA DE CABLE CONDUCTOR			1	1		
23	65L–83557–00	TUBE ENCHUFE DE ACEITE			1	1		
24	90468–07179	CLIP PRESILLA			1	1		
25	90465–11M10	CLAMP BRIDA			1	1		
26	90480–17M08	GROMMET TAPON			1	1		

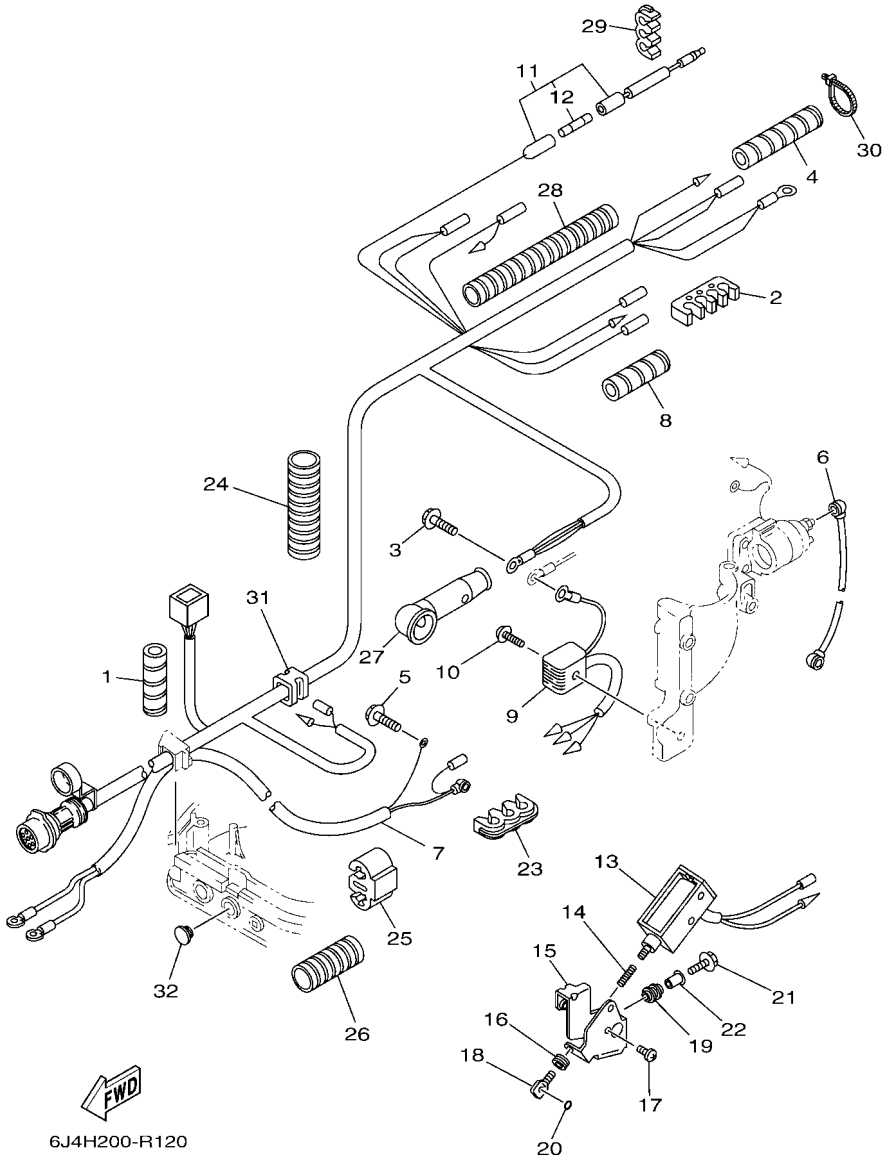

FIG. 12 ELECTRICAL 3 — EQUIPO ELECTRICO 3

REF. NO.	PART NO. CODIGO Nº	DESCRIPTION DESCRIPCION	E40M	40MH	E40W	40WH	40W	REMARKS OBSERVACIONES
1	90446–10M02	HOSE TUBO RESEIRADERO					1	
2	90464–07M06	CLAMP BRIDA					1	
3	97E95–06516	BOLT, HEXAGON W/W DEEP RECESS TORNILLO HEXAGONAL CON RONDONA					1	
4	90446–10M01	HOSE (L60) TUBO (L60)					1	
5	97E95–08516	BOLT, HEXAGON W/W DEEP RECESS TORNILLO HEXAGONAL CON RONDONA					1	
6	6F5–82117–01	WIRE, LEAD CABLE CONDUCTOR					1	
7	6F5–82105–01	BATTERY CABLE CABLE DE BATERIA					1	
8	90446–10M02	HOSE TUBO RESEIRADERO					2	
9	6F5–81970–62	RECTIFIER ASSY RECTIFICADOR COMPLETO					1	
10	97980–05225	SCREW, WITH WASHER TORNILLO, CON ARANDELA					1	
11	6J4–82590–12	WIRE HARNESS ASSY CONJUNTO DE CABLES					1	
12	663–82151–01	.FUSE (12V-20A) .FUSIBLE (12V-20A)					1	
13	6J4–86111–00	COIL, SOLENOID CONJUNTO BOBINA SOLENOIDE					1	
14	6J4–86116–00	WIRE, PULL ALAMBRE-JALADOR					1	
15	6J4–86112–00	STAY, SOLENOID SOPORTE SOLENOIDE					1	
16	90480–10155	GROMMET TAPON					1	
17	97880–05008	SCREW, PAN HEAD TORNILLO DE CABEZA CON PLANA					4	
18	682–86117–00	HOOK, WIRE PULL GANCHO JALADOR DE ALAMBRE					1	
19	6A0–82317–01	DAMPER, IGNITION COIL AMORTIGUADOR BOBINA ENCENDIDO					3	
20	93210–03261	O-RING ANILLO O					1	
21	97E95–06525	BOLT, HEXAGON W/W DEEP RECESS TORNILLO HEXAGONAL CON RONDONA					3	
22	90387–06119	COLLAR ESPACIADOR					3	
23	90468–07179	CLIP PRESILLA					1	
24	6G1–83557–00	TUBE ENCHUFE DE ACEITE					1	
25	90464–06006	CLAMP BRIDA					1	
26	6G5–83557–00	TUBE ENCHUFE DE ACEITE					1	
27	61A–82119–00	COVER, LEAD WIRE CUBIERTA DE CABLE CONDUCTOR					1	

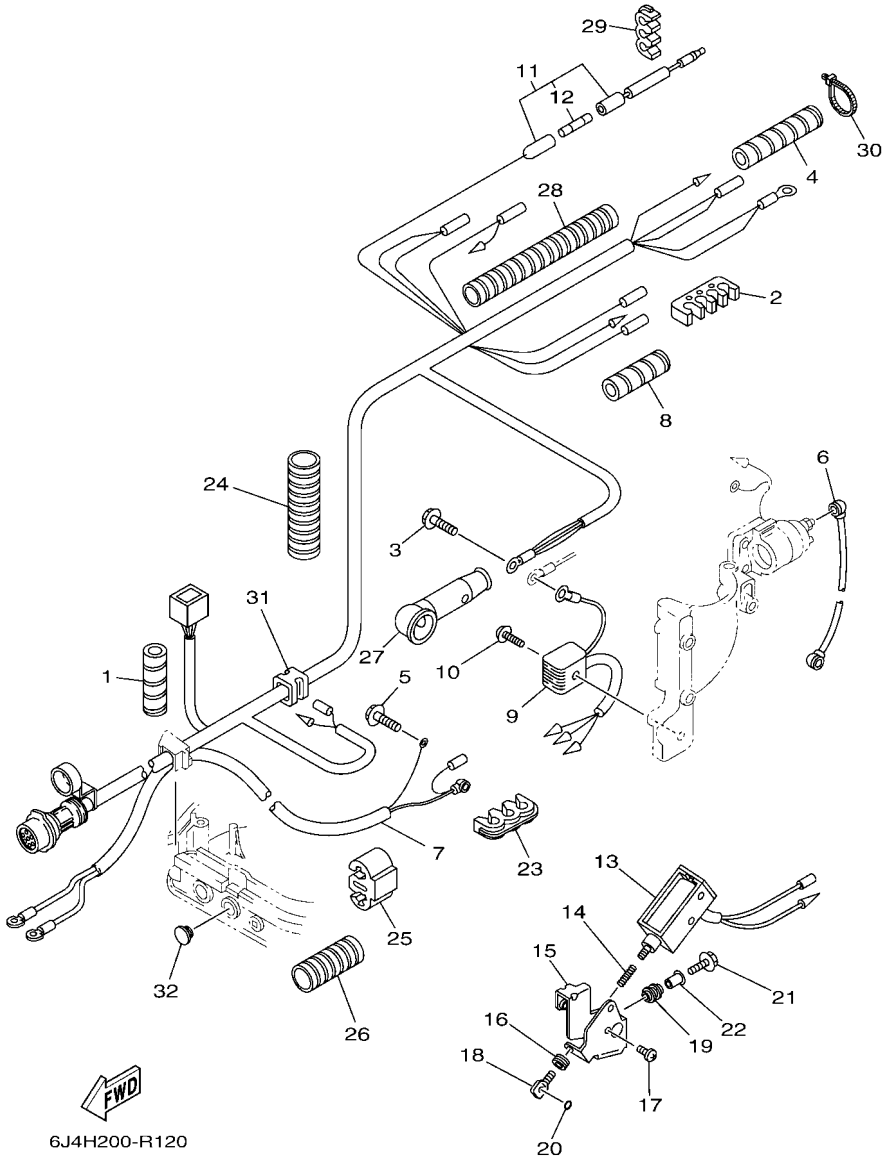

FIG. 12 ELECTRICAL 3 — EQUIPO ELECTRICO 3

REF. NO.	PART NO. CODIGO Nº	DESCRIPTION DESCRIPCION	E40M	40MH	E40W	40WH	40W	REMARKS OBSERVACIONES
28	65L–83557–00	TUBE ENCHUFE DE ACEITE					1	
29	90468–07179	CLIP PRESILLA					1	
30	90465–11M10	CLAMP BRIDA					1	
31	90480–17165	GROMMET TAPON					1	
32	90480–17M08	GROMMET TAPON					1	

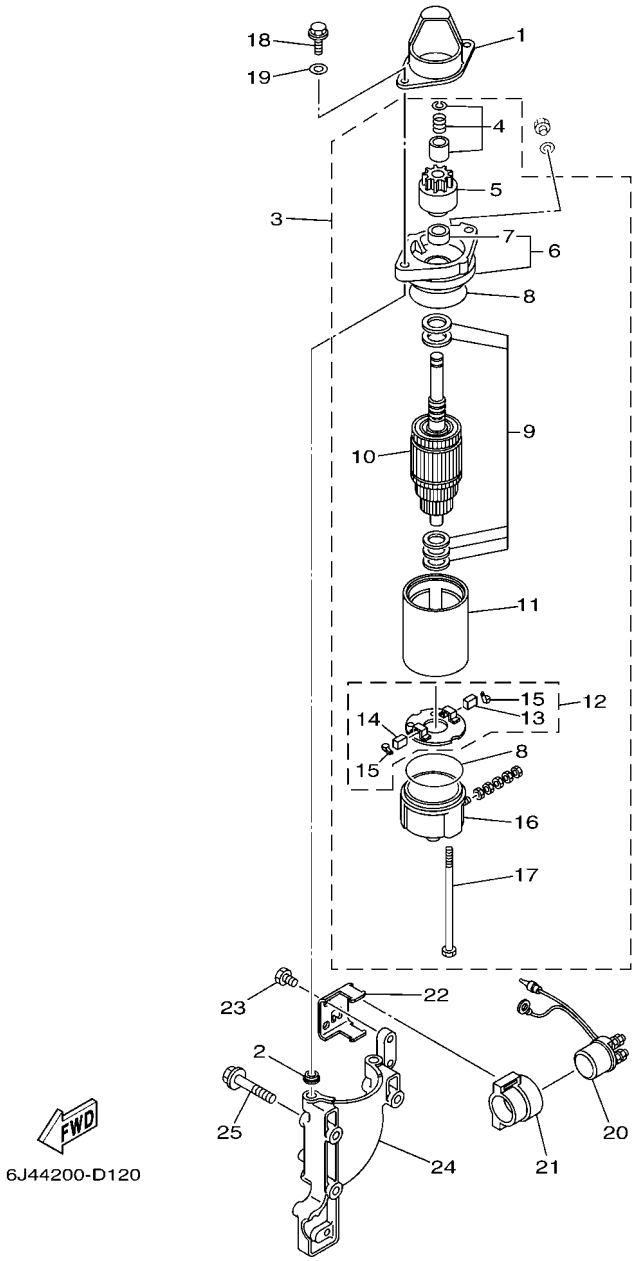

FIG. 13 STARTING MOTOR — MOTOR DE ARRANQUE

REF. NO.	PART NO. CODIGO Nº	DESCRIPTION DESCRIPCION	E40M	40MH	E40W	40WH	40W	REMARKS OBSERVACIONES
1	6F5–81842–41	COVER TAPA			1	1	1	
2	90387–08M12	COLLAR ESPACIADOR			2	2	2	
3	6J4–81800–01	STARTING MOTOR ASSY MOTOR DE ARRANQUE COMPLETO			1	1	1	
4	689–81857–11	.PINION STOPPER SET .JUEGO TAPON PINON			1	1	1	
5	689–81807–12	.GEAR ASSY, STARTING MOTOR .PINON CONJUNTO			1	1	1	
6	6F5–81830–11	.FRONT BRACKET ASSY .SOPORTE DELANTERO COMPLETO			1	1	1	
7	689–81831–00	..METAL, FRONT ..METAL, DELANTERO			1	1	1	
8	689–81847–11	.O-RING .ANILLO GOMA			2	2	2	
9	689–81809–11	.WASHER KIT .JUEGO DE ARANDELA			1	1	1	
10	689–81850–12	.ARMATURE ASSY .INDUCIDO COMPLETO			1	1	1	
11	689–81810–11	.STATOR ASSY .ESTATOR COMPLETO			1	1	1	
12	689–81840–11	.BRUSH HOLDER ASSY .SOSTEN DE ESCOBILLA COMPLETO			1	1	1	
13	689–81811–11	..BRUSH 1 ..ESCOBILLA 1			1	1	1	
14	689–81812–11	..BRUSH 2 ..ESCOBILLA 2			1	1	1	
15	689–81813–10	..SPRING, BRUSH ..RESORTE DE ESCOBILLA			2	2	2	
16	689–81820–11	.REAR BRACKET ASSY .CUBIERTA TRASERA COMPL			1	1	1	
17	689–81826–10	.BOLT .PERNO			2	2	2	
18	90105–08M50	BOLT, FLANGE TORNILLO			2	2	2	
19	92990–08600	WASHER, PLATE ARANDELA PLANA			2	2	2	
20	6G1–81941–10	STARTER RELAY ASSY RELE DE ARRANQUE			1	1	1	
21	6G1–81952–01	HOLDER, RELAY SOSTEN DE RELE			1	1	1	
22	6F5–81945–00	PLATE, SWITCH FITTING PLACA ACCESORIA DE INTERRUP.			1	1	1	
23	97D95–06012	BOLT, HEXAGON DEEP RECESS TORNILLO HEXAGONAL			2	2	2	
24	6J4–81820–02	REAR BRACKET ASSY CUBIERTA TRASERA COMPL			1	1	1	
25	90105–08M51	BOLT, FLANGE TORNILLO			3	3	3	

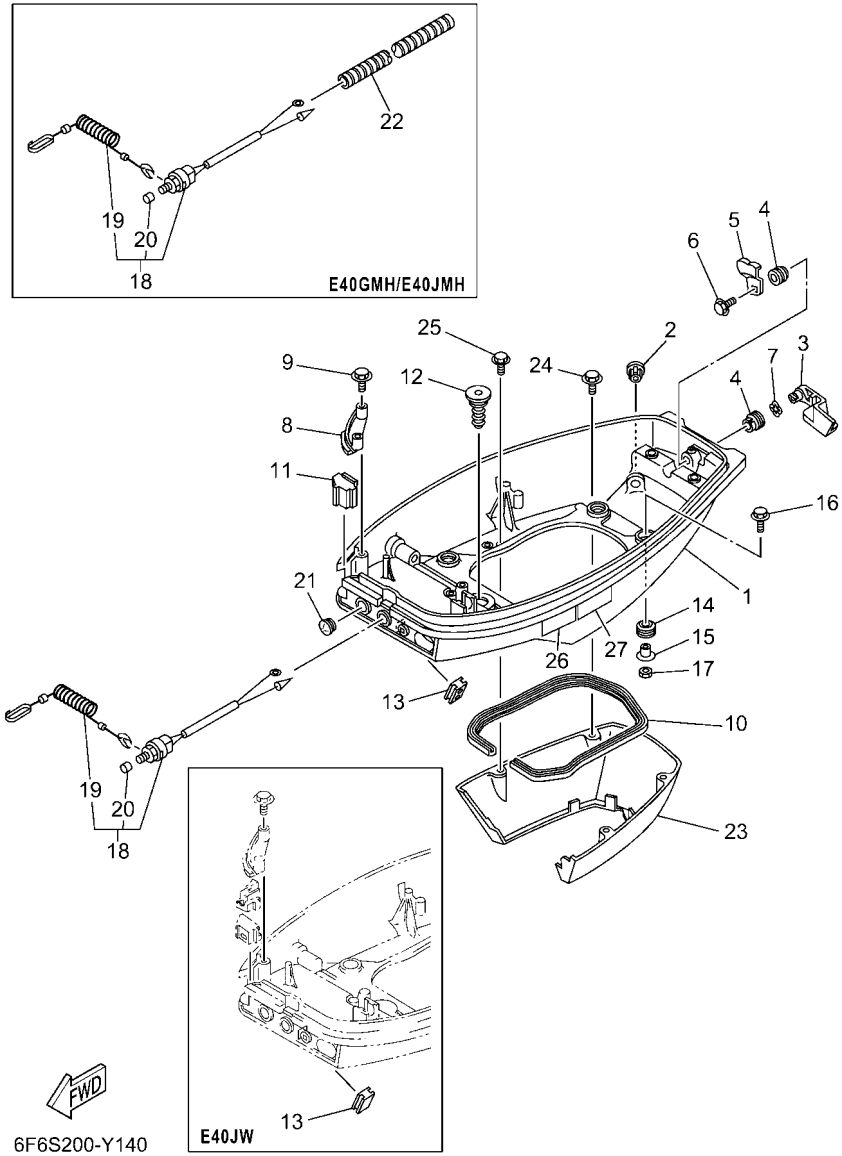

FIG. 14 BOTTOM COWLING — CUBIERTA INFERIOR

REF. NO.	PART NO. CODIGO Nº	DESCRIPTION DESCRIPCION	E40M	40MH	E40W	40WH	40W	REMARKS OBSERVACIONES
1	6F6–42711–03–8D	COWLING, BOTTOM 1 CUBIERTA INFERIOR 1	1	1	1	1	1	
2	6E5–44391–00	NIPPLE, HOSE NIPLE MANGUERA	1	1	1	1	1	
3	6F5–42815–01–8D	LEVER, CLAMP 1 PALANCA ABRAZADERA 1	1	1	1	1	1	
4	90386–12M37	BUSH BUJE	2	2	2	2	2	
5	6F5–42816–00	LEVER, CLAMP 2 PALANCA ABRAZADERA 2	1	1	1	1	1	
6	90119–06273	BOLT, WITH WASHER TORNILLO CON ARANDELA	1	1	1	1	1	
7	90206–12052	WASHER, WAVE ARANDELA ONDULADA	1	1	1	1	1	
8	6F5–42738–01–94	PLATE, FITTING PLACA DE AJUSTE	1	1	1	1	1	
9	97E95–06525	BOLT, HEXAGON W/W DEEP RECESS TORNILLO HEXAGONAL CON RONDONA	2	2	2	2	2	
10	6F5–42716–01	RUBBER SEAL 1 SELLO DE GOMA 1	1	1	1	1	1	
11	6F5–42724–01	GROMMET TAPON	1	1				
	6F5–42724–41	GROMMET TAPON			1	1		
12	6F5–42727–01	GROMMET TAPON	1	1	1	1	1	
13	676–26326–01	GROMMET TAPON PROTECTOR	1	1	1	1		
	676–42724–41	GROMMET TAPON					1	
14	90480–09M21	GROMMET TAPON	4	4	4	4	4	
15	90387–06M41	COLLAR ESPACIADOR	4	4	4	4	4	
16	90119–06291	BOLT, WITH WASHER TORNILLO CON ARANDELA	4	4	4	4	4	
17	95380–06600	NUT, HEXAGON TUERCA	4	4	4	4	4	
18	6E9–82575–02	ENGINE STOP SWITCH ASSY INTERRUPTOR DE PARADA COMPL	1	1	1	1		
19	682–82556–00	.LANYARD, STOP SWITCH .CORDON DE INTERRUPTOR PARADA	1	1	1	1		
20	689–8257Y–00	.CAP .TAPA	1	1	1	1		
21	676–42726–00	GROMMET TAPON	1	1			1	
22	90447–13011	TUBE TUBO	1	1				
23	6F5–42741–11	APRON, 1 MANDIL 1	1	1	1	1	1	
24	97E95–06525	BOLT, HEXAGON W/W DEEP RECESS TORNILLO HEXAGONAL CON RONDONA	2	2	2	2	2	
25	90119–06M11	BOLT, WITH WASHER TORNILLO CON ARANDELA	2	2	2	2	2	

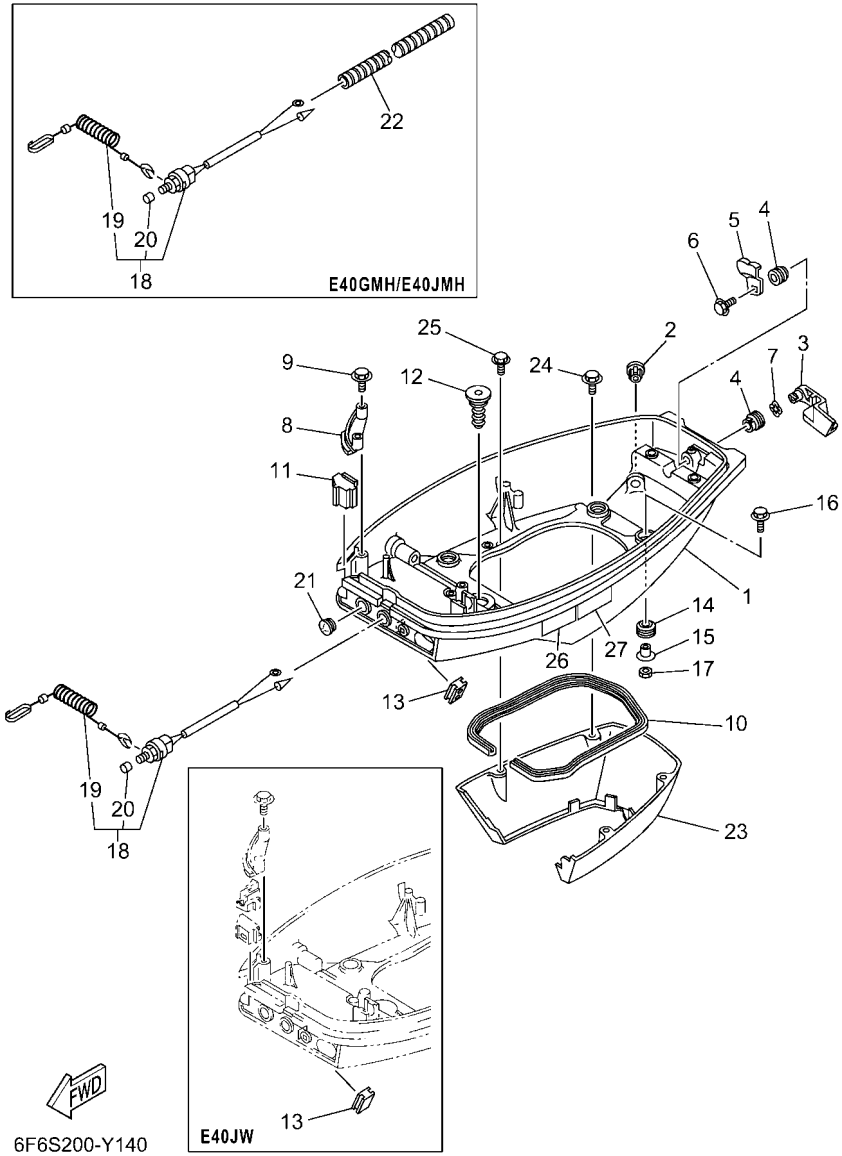

FIG. 14 BOTTOM COWLING — CUBIERTA INFERIOR

REF. NO.	PART NO. CODIGO Nº	DESCRIPTION DESCRIPCION	E40M	40MH	E40W	40WH	40W	REMARKS OBSERVACIONES
26	6EE–42794–40	LABEL, WARNING (GENERAL) ETIQUETA DE PRECAUCION	1	1	1	1	1	
27	6EE–42794–50	LABEL, WARNING (GENERAL) ETIQUETA DE PRECAUCION	1					FOR AFR FOR AFR

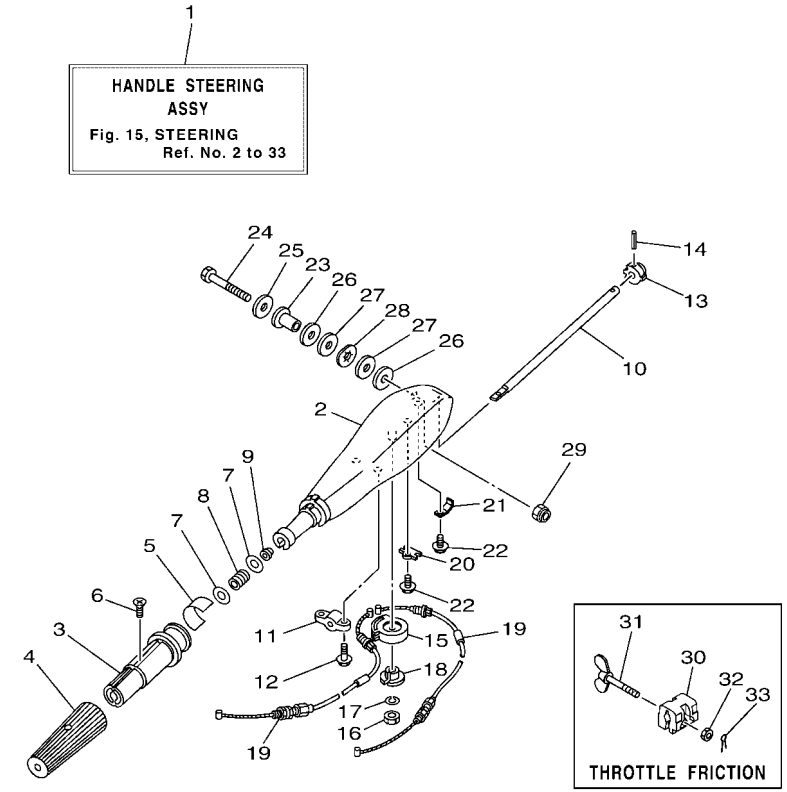

FIG. 15 STEERING — DIRECCION

REF. NO.	PART NO. CODIGO Nº	DESCRIPTION DESCRIPCION	E40M	40MH	E40W	40WH	40W	REMARKS OBSERVACIONES
1	6F6–W0084–04–8D	HANDLE STEERING ASSY CONJUNTO DE MANIJA	1	1	1	1		
2	676–42111–03–8D	HANDLE, STEERING MANIJA DE DIRECCION	1	1	1	1		
3	664–42119–00	GRIP, STEERING HANDLE MANGO, MANIJA DE DIRRECCION	1	1	1	1		
4	6G1–42177–01	RUBBER, HANDLE HULE DE MANIJA	1	1	1	1		
5	6F6–42137–20	INDICATOR, THROTTLE INDICADOR ACELERADOR	1	1	1	1		
6	90152–05011	SCREW, COUNTERSUNK TORNILLO EMBUTIDO	1	1	1	1		
7	90201–10M02	WASHER, PLATE ARANDELA PLANA	2	2	2	2		
8	90501–23215	SPRING, COMPRESSION RESORTE DE COMPRESION	1	1	1	1		
9	90386–08032	BUSH BUJE	1	1	1	1		
10	676–42115–00	SHAFT, STEERING HANDLE EJE MANIJA DE DIRECCION	1	1	1	1		
11	676–42159–00	STAY SOPORTE	1	1	1	1		
12	97E95–06520	BOLT, HEXAGON W/W DEEP RECESS TORNILLO HEXAGONAL CON RONDONA	2	2	2	2		
13	650–42152–00–94	GEAR ENGRANE	1	1	1	1		
14	91690–30025	PIN, SPRING PASADOR DE RESORTE	1	1	1	1		
15	676–42151–00–94	PINION PINON	1	1	1	1		
16	95380–06600	NUT, HEXAGON TUERCA	1	1	1	1		
17	92990–06100	WASHER, SPRING ARANDELA PLANA	1	1	1	1		
18	90386–08M00	BUSH BUJE	1	1	1	1		
19	6F5–26311–00	WIRE, THROTTLE 1 CABLE DE ACELERADOR 1	2	2	2	2		
20	676–26391–00	CLIP, CABLE PRESILLA DE CABLE	1	1	1	1		
21	676–26392–00	CLIP, CABLE 2 PRESILLA DE CABLE 2	1	1	1	1		
22	97595–05510	BOLT HEX. HEAD PERNO CON ARANDELA	2	2	2	2		
23	90386–12089	BUSH BUJE	1	1	1	1		
24	90101–12M37	BOLT TORNILLO	1	1	1	1		
25	92990–12200	WASHER, PLAIN ARANDELA PLANA	1	1	1	1		
26	90202–12092	WASHER, PLATE ARANDELA DE PLANA	2	2	2	2		
27	90201–12537	WASHER, PLATE ARANDELA PLANA	2	2	2	2		

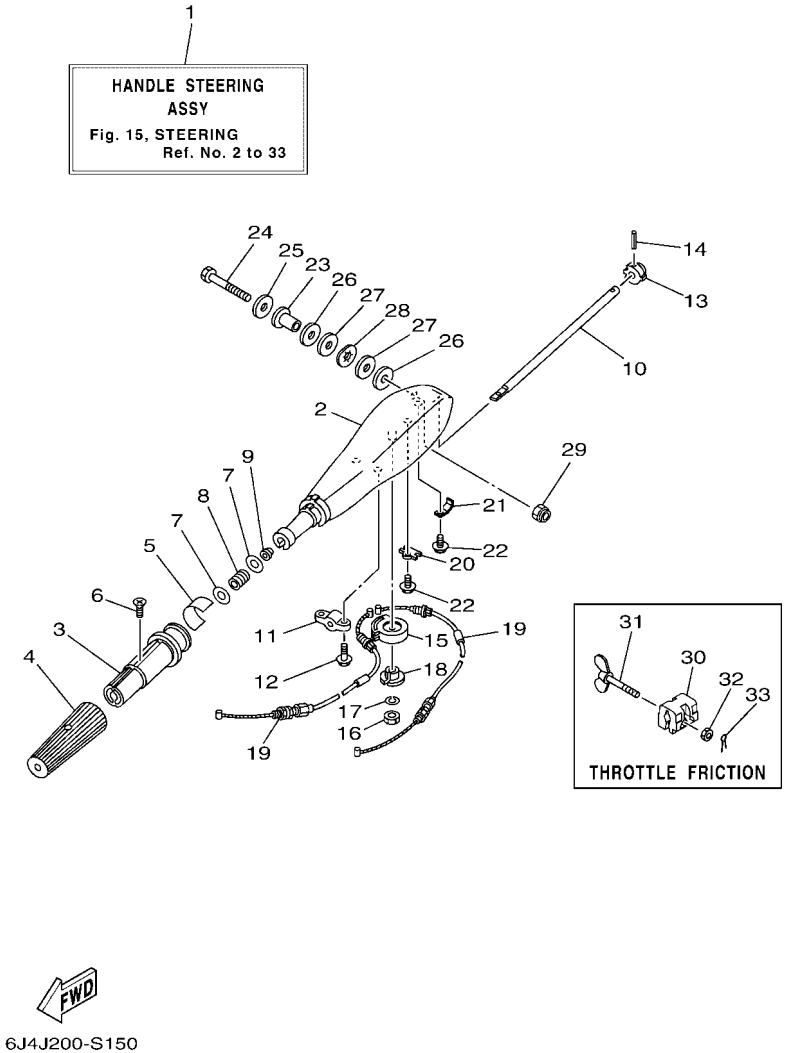

FIG. 15 STEERING — DIRECCION

REF. NO.	PART NO. CODIGO Nº	DESCRIPTION DESCRIPCION	E40M	40MH	E40W	40WH	40W	REMARKS OBSERVACIONES
28	90206–12054	WASHER, WAVE ARANDELA ONDULADA	1	1	1	1		
29	90185–12058	NUT, SELF-LOCKING TUERCA AUTOBLOCANTE	1	1	1	1		
30	6F5–42126–00	FRICTION, STEERING HANDLE GRIP FRICCION DE MANGO DIRECCION	1	1	1	1		
31	6F5–42125–00	BOLT, FRICTION ADJUSTING TORNILLO FRICCION ADJUSTA	1	1	1	1		
32	95380–06600	NUT, HEXAGON TUERCA	1	1	1	1		
33	91490–16010	PIN. COTTER CHAVETA	1	1	1	1		

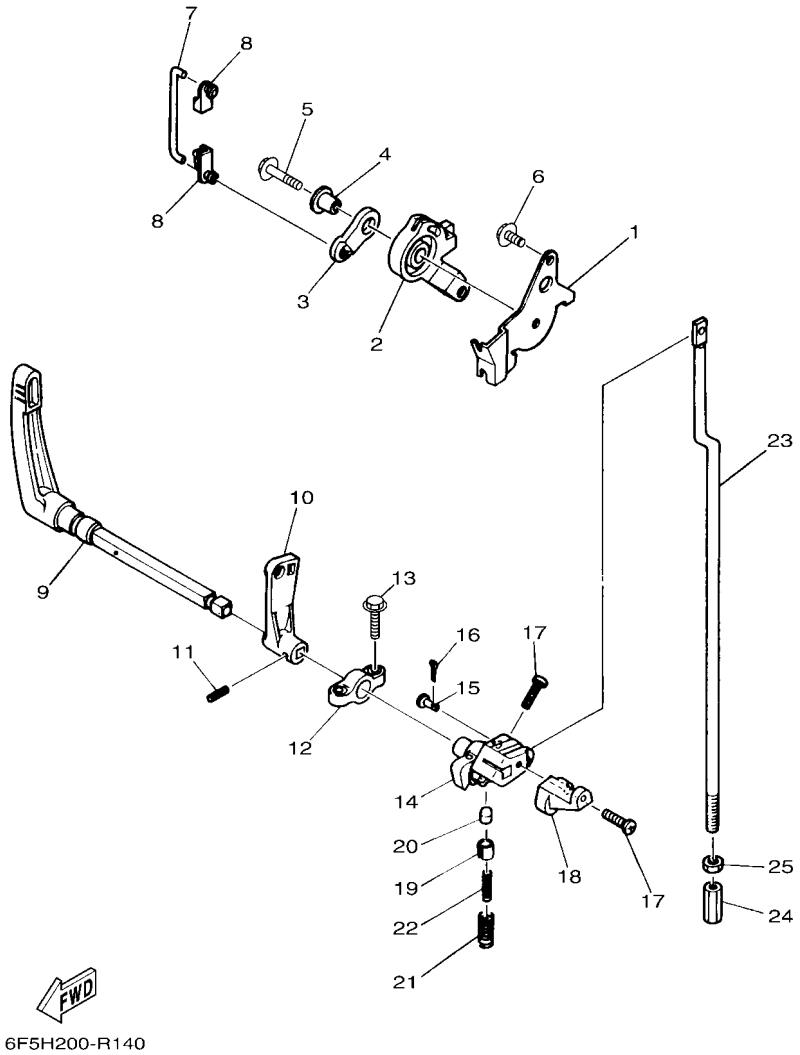

FIG. 16 CONTROL 1

CONTROL 1

REF. NO.	PART NO. CODIGO Nº	DESCRIPTION DESCRIPCION	E40M	40MH	E40W	40WH	40W	REMARKS OBSERVACIONES
1	6F5–14497–00	STAY, THROTTLE WIRE SOPORTE VALVULA DE OBTURACION	1	1	1	1	1	
2	6F5–41638–00	PULLEY POLEA	1	1	1	1	1	
3	6F5–41283–00	LEVER, FREE ACCEL. PALANCA	1	1	1	1	1	
4	90387–06M29	COLLAR ESPACIADOR	1	1	1	1	1	
5	97E95–06530	BOLT, HEXAGON W/W DEEP RECESS TORNILLO HEXAGONAL CON RONDONA	1	1	1	1	1	
6	97E95–06516	BOLT, HEXAGON W/W DEEP RECESS TORNILLO HEXAGONAL CON RONDONA	1	1	1	1	1	
7	6F5–41211–00	LINK, ACCEL. ESLABON, ACELERADOR	1	1	1	1	1	
8	6E9–41237–00	JOINT, LINK CONECTOR	2	2	2	2	2	
9	6F5–44111–01	HANDLE, GEAR SHIFT MANIJA DE CAMBIO DE MARCHAS	1	1	1	1		
10	6F5–44125–00	LEVER, SHIFT ROD PALANCA VARILLA CAMBIOS	1	1	1	1	1	
11	91690–25016	PIN, SPRING PASADOR DE RESORTE	1	1	1	1	1	
12	6F5–41662–00	BRACKET 2 SOPORTE 2	1	1	1	1	1	
13	97513–06525	BOLT, WITH WASHER PERNO CON ARANDELA	2	2	2	2	2	
14	6F5–44121–00	LEVER, SHIFT ROD PALANCA VARILLA CAMBIOS	1	1	1	1	1	
15	90240–05M09	PIN, CLEVIS PASADOR CON HOYO	1	1	1	1	1	
16	91490–16010	PIN. COTTER CHAVETA	1	1	1	1	1	
17	97780–40520	SCREW, TAPPING TORNILLO DE CABEZA DE CONO ACH	2	2	2	2	2	
18	6F5–44173–00	LEVER, SHIFT CONTROL PALANCA CONTROL CAMBIOS	1	1	1	1	1	
19	6F5–42715–00	BUSHING 2 BUJE 2	1	1	1	1	1	
20	6F5–44167–00	PLUNGER, SHIFT CAM EMBOLO DE CAMBIO	1	1	1	1	1	
21	90501–12M36	SPRING, COMPRESSION RESORTE DE COMPRESION	1	1	1	1	1	
22	90501–07M33	SPRING, COMPRESSION RESORTE DE COMPRESION	1	1	1	1	1	
23	676–44143–00	ROD, SHIFT 1 VARILLA DE CAMBIO 1	1	1	1	1	1	
24	648–44146–00	CONNECTOR, SHIFT ROD 2 CONECTOR VARILLA DE CAMBIO 2	1	1	1	1	1	
25	90170–07021	NUT TUERCA	1	1	1	1	1	

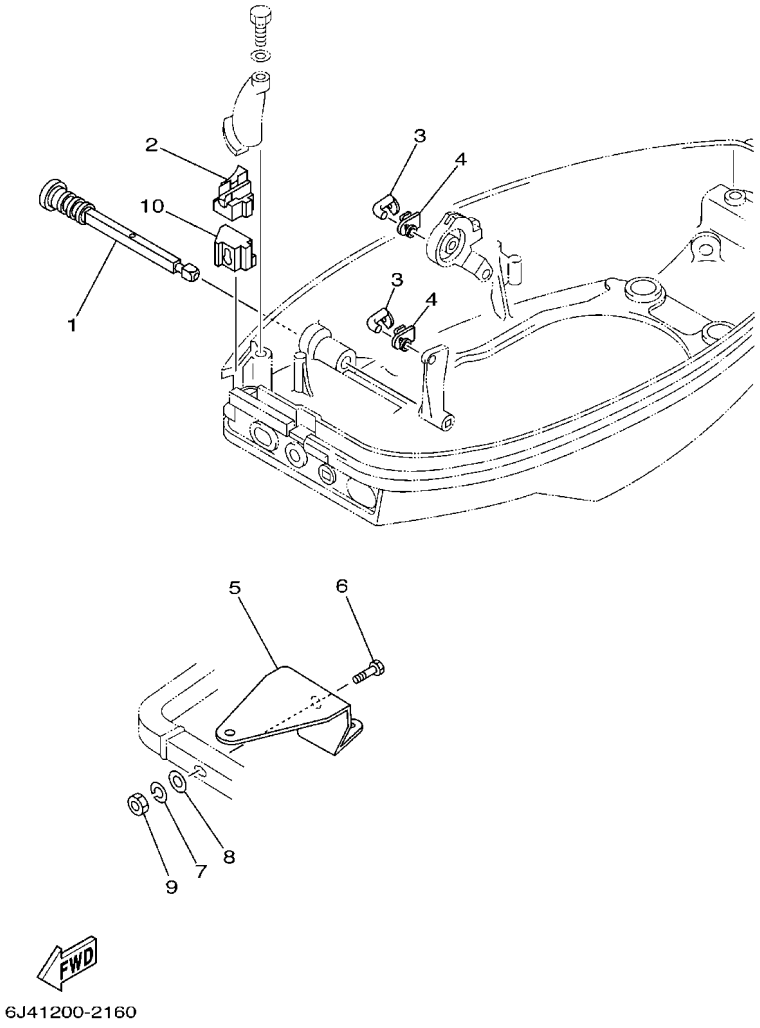

FIG. 17 CONTROL 2

CONTROL 2

REF. NO.	PART NO. CODIGO Nº	DESCRIPTION DESCRIPCION	E40M	40MH	E40W	40WH	40W	REMARKS OBSERVACIONES
1	6F5–44111–51	HANDLE, GEAR SHIFT MANIJA DE CAMBIO DE MARCHAS					1	
2	6F5–48538–00	CLAMP, CABLE 1 GRAMPA DE CABLE					1	
3	6F5–48345–00	CABLE END,REMOTE CONTROL 2 TERMINAL CABLE DE CONTROL REMO					2	
4	6F5–41237–00	JOINT, LINK CONECTOR					2	
5	676–48511–02	HOOK, STEERING GANCHO DIRECCION					1	
6	97D75–10040	BOLT, HEXAGON DEEP RECESS TORNILLO HEXAGONAL					1	
7	92990–10100	WASHER, SPRING ARANDELA PLANA					1	
8	92995–10600	WASHER ARANDELA					1	
9	95380–10600	NUT TUERCA					1	
10	6F5–42725–51	GROMMET TAPON					1	

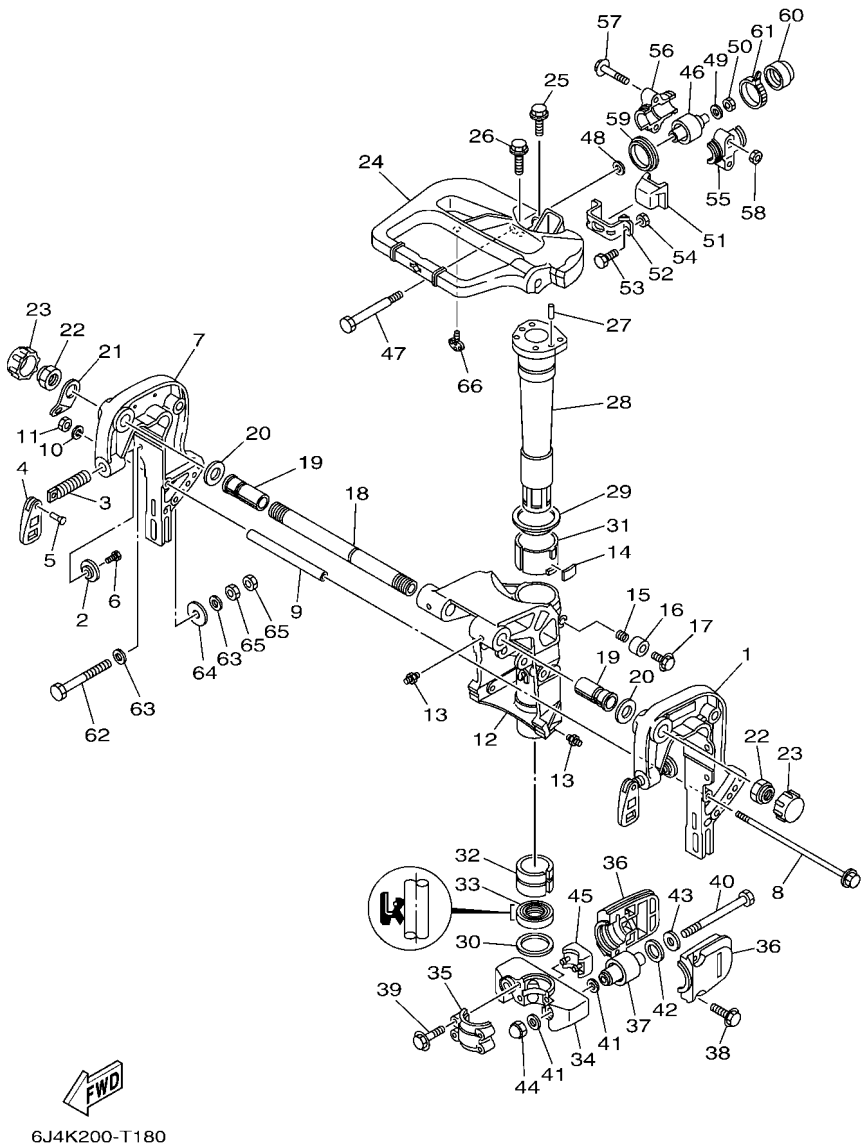

FIG. 18 BRACKET 1 — SOPORTE 1

REF. NO.	PART NO. CODIGO Nº	DESCRIPTION DESCRIPCION	E40M	40MH	E40W	40WH	40W	REMARKS OBSERVACIONES
1	676–43111–04–8D	BRACKET, CLAMP 1 SOPORTE DE LA ABRAZADERA 1	1	1	1	1	1	
2	6F5–43114–00	PAD, TRANSOM CLAMP ARANDELA DE ABRAZADERA	2	2	2	2	2	
3	6F5–43116–00	SCREW, TRANSOM CLAMP TORNILLO DE ABRAZADERA	2	2	2	2	2	
4	663–43118–01–8D	HANDLE, TRANSOM CLAMP MANIJA DE LA ABRAZADERA DEL ES	2	2	2	2	2	
5	90243–04007	PIN PASADOR	2	2	2	2	2	
6	90109–06M12	BOLT PERNO	2	2	2	2	2	
7	676–43112–05–8D	BRACKET, CLAMP 2 SOPORTE DE LA ABRAZADERA 2	1	1	1	1	1	
8	90105–08117	BOLT, FLANGE TORNILLO	1	1	1	1	1	
9	90387–08M02	COLLAR ESPACIADOR	1	1	1	1	1	
10	92990–08100	WASHER, SPRING ARANDELA PLANA	1	1	1	1	1	
11	95380–08600	NUT TUERCA	1	1	1	1	1	
12	676–43311–11–8D	BRACKET, SWIVEL 1 SOPORTE GIRATORIO 1	1	1	1	1	1	
13	93700–06004	NIPPLE, GREASE BOQUILLA DE ENGRASAR	4	4	4	4	4	
14	648–42528–01	PLATE, FRICTION PIEZA DE FRICCION	1	1	1	1	1	
15	90501–18M00	SPRING, COMPRESSION RESORTE DE COMPRESION	1	1	1	1	1	
16	676–43373–01	SEAL, DAMPER SELLO DE GOMA	1	1	1	1	1	
17	97E75–08525	BOLT, HEXAGON W/W DEEP RECESS TORNILLO HEXAGONAL CON RONDONA	1	1	1	1	1	
18	6J8–43131–01	BOLT, CLAMP BRACKET TORNILLO DE ABRAZADERA DEL SOP	1	1	1	1	1	
19	90386–22M15	BUSH BUJE	2	2	2	2	2	
20	90201–22M03	WASHER, PLATE ARANDELA PLANA	2	2	2	2	2	
21	6J8–43113–01	PLATE, CLAMP BRACKET PLACA ABRAZADERA SOPORTE	1	1	1	1	1	
22	90185–22043	NUT, SELF-LOCKING TUERCA AUTOBLOCANTE	2	2	2	2	2	
23	6G5–43145–01	CAP, CLAMP BRACKET TAPA	2	2	2	2	2	
24	676–42511–03–8D	BRACKET, STEERING SOPORTE DE DIRECCION	1	1	1	1	1	
25	97E75–08530	BOLT, HEXAGON W/W DEEP RECESS TORNILLO HEXAGONAL CON RONDONA	2	2	2	2	2	
26	97E75–08535	BOLT, HEXAGON W/W DEEP RECESS TORNILLO HEXAGONAL CON RONDONA	2	2	2	2	2	
27	93608–12063	PIN, DOWEL PASADOR DE CLAVIJA	2	2	2	2	2	

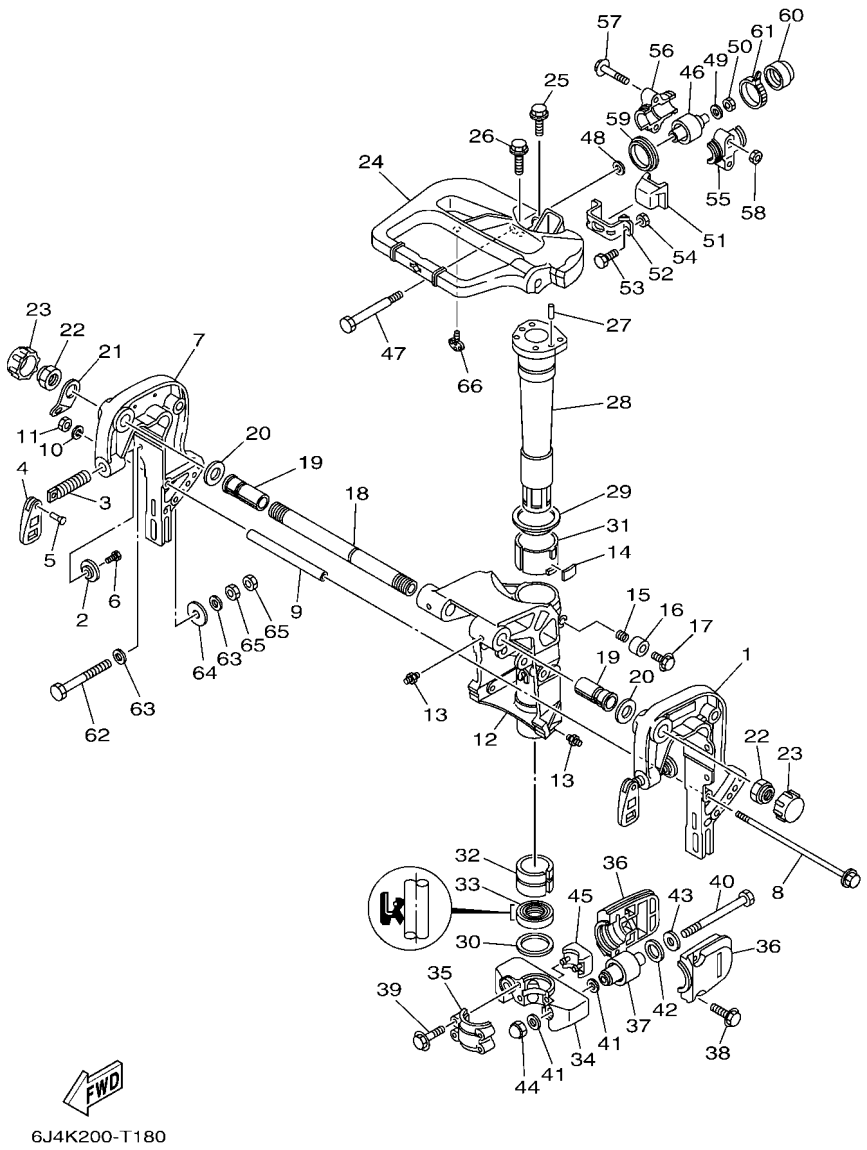

FIG. 18 BRACKET 1 — SOPORTE 1

REF. NO.	PART NO. CODIGO Nº	DESCRIPTION DESCRIPCION	E40M	40MH	E40W	40WH	40W	REMARKS OBSERVACIONES
28	676–42521–00	SHAFT, STEERING PIVOT EJE PIVOTE DE DIRECCION	1	1	1	1	1	
29	90209–52M00	WASHER ARANDELA DE SEPARACION	1	1	1	1	1	
30	90201–44M01	WASHER, PLATE ARANDELA PLANA	1	1	1	1	1	
31	90386–52M02	BUSH BUJE	1	1	1	1	1	
32	90386–44M03	BUSH BUJE	1	1	1	1	1	
33	93109–44M00	OIL SEAL SELLO ACEITE	1	1	1	1	1	
34	676–44551–01–8D	HOUSING, LOWER MOUNT RUBBER 1 CAJA AMORTIGUADOR INFERIOR HU	1	1	1	1	1	
35	676–44552–01–8D	HOUSING, LOWER MOUNT RUBBER 2 CAJA AMORTIGUADOR INFERIOR HU	1	1	1	1	1	
36	676–44553–01–8D	COVER, LOWER MOUNT CUBIERTA,AMORTIGUADOR INFERIOR	2	2	2	2	2	
37	62Y–44555–00	MOUNT DAMPER, LOWER SIDE AMORTIGUADOR DE HULE LADO INFE	2	2	2	2	2	
38	97E75–08530	BOLT, HEXAGON W/W DEEP RECESS TORNILLO HEXAGONAL CON RONDONA	4	4	4	4	4	
39	97E95–08545	BOLT, HEXAGON W/W DEEP RECESS TORNILLO HEXAGONAL CON RONDONA	4	4	4	4	4	
40	90101–12M01	BOLT TORNILLO	2	2	2	2	2	
41	90201–12M16	WASHER, PLATE ARANDELA PLANA	4	4	4	4	4	
42	90202–21100	WASHER, PLATE ARANDELA DE PLANA	2	2	2	2	2	
43	90201–13M11	WASHER, PLATE ARANDELA PLANA	2	2	2	2	2	
44	95380–12800	NUT, CROWN TUERCA	2	2	2	2	2	
45	676–44575–01	DAMPER, LOWER MOUNT RUBBER AMORTIGUADOR INFERIOR	1	1	1	1	1	
46	679–44514–00	MOUNT DAMPER, UPPER SIDE AMORTIGUADOR LADO SUPERIOR	2	2	2	2	2	
47	90101–08M02	BOLT TORNILLO	2	2	2	2	2	
48	90201–08M08	WASHER, PLATE ARANDELA PLANA	2	2	2	2	2	
49	90201–09M00	WASHER, PLATE ARANDELA PLANA	2	2	2	2	2	
50	90185–08057	NUT, SELF-LOCKING TUERCA AUTOBLOCANTE	2	2	2	2	2	
51	676–44533–01	DAMPER, UPPER MOUNT RUBBER AMORTIGUADOR SUPERIOR	1	1	1	1	1	
52	676–44518–00	BRACKET COMP. SOPORTE	1	1	1	1	1	
53	97D95–06025	BOLT, HEXAGON DEEP RECESS TORNILLO HEXAGONAL	2	2	2	2	2	
54	95380–06600	NUT, HEXAGON TUERCA	2	2	2	2	2	

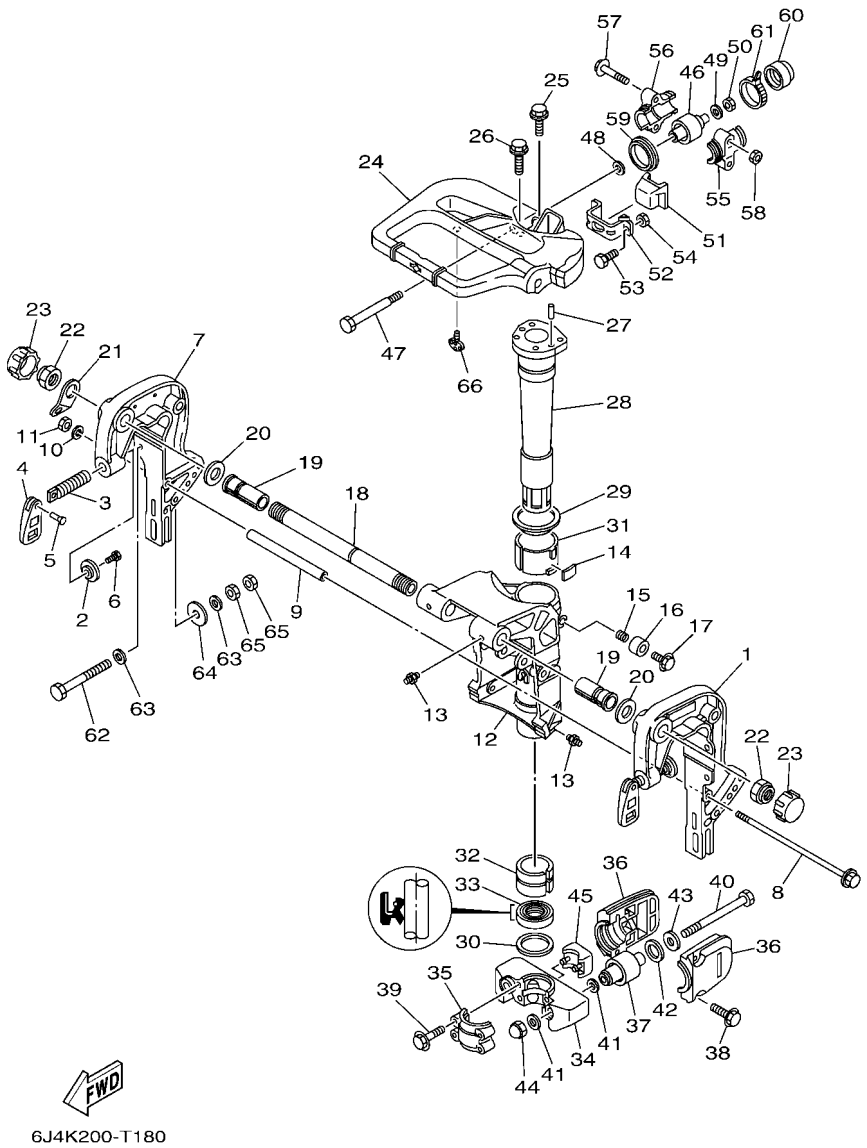

FIG. 18 BRACKET 1 — SOPORTE 1

REF. NO.	PART NO. CODIGO Nº	DESCRIPTION DESCRIPCION	E40M	40MH	E40W	40WH	40W	REMARKS OBSERVACIONES
55	676–44511–00	COVER, UPPER MOUNT CUBIERTA AMORTIGUADOR SUPERIOR	2	2	2	2	2	
56	676–44512–00	COVER, UPPER MOUNT CUBIERTA AMORTIGUADOR SUPERIOR	2	2	2	2	2	
57	97E95–08550	BOLT, HEXAGON W/W DEEP RECESS TORNILLO HEXAGONAL CON RONDONA	4	4	4	4	4	
58	95380–08600	NUT TUERCA	4	4	4	4	4	
59	676–44521–00	SEAL SELLO DE GOMA	2	2	2	2	2	
60	676–44522–01	SEAL SELLO DE GOMA	2	2	2	2	2	
61	90465–11M52	CLAMP BRIDA	2	2	2	2	2	
62	90101–10047	BOLT TORNILLO	4	4	4	4	4	
63	92995–10600	WASHER ARANDELA	8	8	8	8	8	
64	90201–12426	WASHER, PLATE ARANDELA PLANA	4	4	4	4	4	
65	95380–10600	NUT TUERCA	8	8	8	8	8	
66	676–42591–01	HOLDER, SHEAR PIN SUJETADOR, PASADOR DE HELICE	1		1			E40G E40G

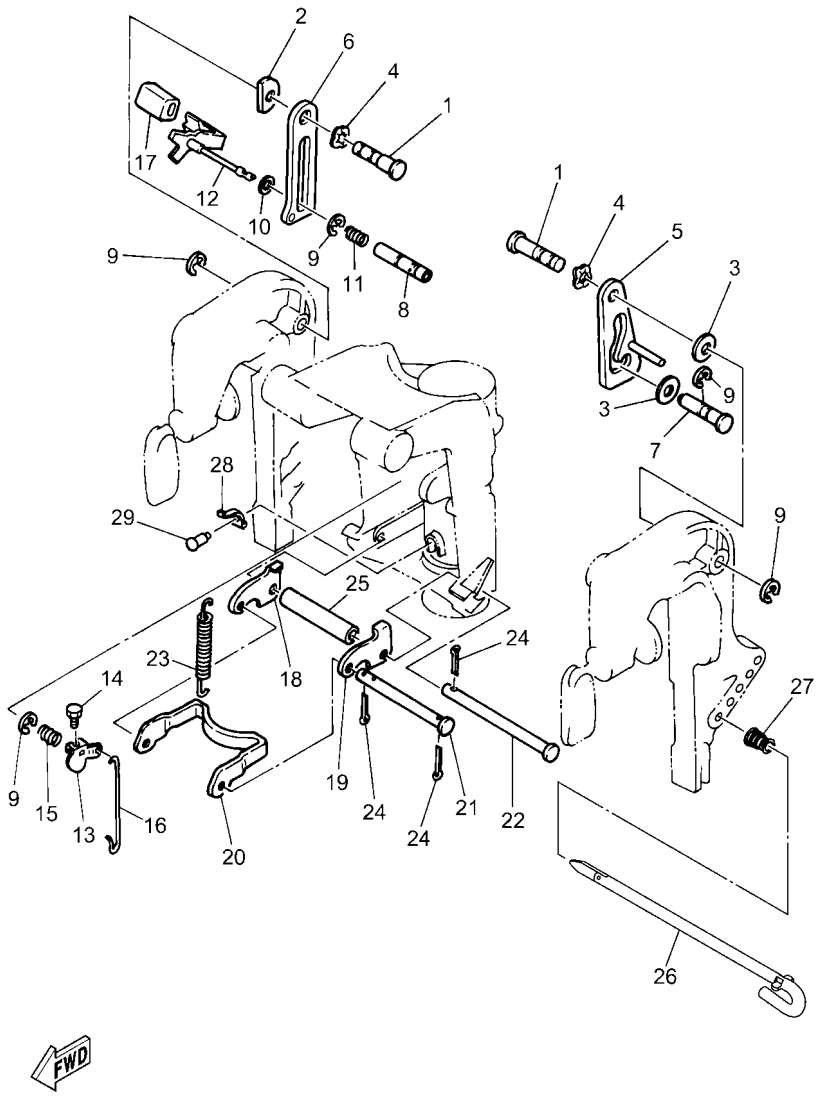

6H9S200-Y160

FIG. 19 BRACKET 2 — SOPORTE 2

REF. NO.	PART NO. CODIGO Nº	DESCRIPTION DESCRIPCION	E40M	40MH	E40W	40WH	40W	REMARKS OBSERVACIONES
1	90249–12M27	PIN PASADOR	2	2	2	2	2	
2	676–43132–00	WASHER, FRICTION ARANDELA DE FRICCION	1	1	1	1	1	
3	90202–12M01	WASHER, PLATE ARANDELA DE PLANA	2	2	2	2	2	
4	90206–12M00	WASHER, WAVE ARANDELA ONDULADA	2	2	2	2	2	
5	6F5–43627–80	STOPPER RETEN	1	1	1	1	1	
6	6F5–43628–81	STOPPER RETEN	1	1	1	1	1	
7	90249–12M13	PIN PASADOR	1	1	1	1	1	
8	676–43191–00	SHAFT, STOPPER EJE DE TOPE	1	1	1	1	1	
9	99080–10600	CIRCLIP PRESILLA REDONDA	5	5	5	5	5	
10	90202–06M00	WASHER, PLATE ARANDELA DE PLANA	1	1	1	1	1	
11	90501–14M05	SPRING, COMPRESSION RESORTE DE COMPRESION	1	1	1	1	1	
12	6F5–43630–80	TILT LEVER ASSY PLANCA DE INCLINACION COMPL	1	1	1	1	1	
13	676–43631–00	LEVER, TILT PALANCA DE INCLINACION	1	1	1	1	1	
14	97095–05010	BOLT PERNO	1	1	1	1	1	
15	90508–14M00	SPRING, TORSION RESORTE DE TORSION	1	1	1	1	1	
16	676–43616–00	ROD, TILT LOCK VARILLA SEGURO DE INCLINACION	1	1	1	1	1	
17	663–43318–00	COVER CUBIERTA	1	1	1	1	1	
18	676–43614–00	PLATE, TILT LOCK PLACA DE SEGURO DE INCLINACION	1	1	1	1	1	
19	676–43615–00	PLATE, TILT LOCK PLACA DE SEGURO DE INCLINACION	1	1	1	1	1	
20	676–43613–01	ARM, TILT LOCK BRAZO DE SEGURO DE INCLINACION	1	1	1	1	1	
21	90249–07M01	PIN PASADOR	1	1	1	1	1	
22	90249–07M02	PIN PASADOR	1	1	1	1	1	
23	90506–30M00	SPRING, TENSION RESORTE DE TENSION	2	2	2	2	2	
24	91490–20012	PIN. COTTER CHAVETA	4	4	4	4	4	
25	90387–07M04	COLLAR ESPACIADOR	1	1	1	1	1	
26	676–43160–02	TILT ROD ASSY VARILLA DE BASCULACION COMPL.	1	1	1	1	1	
27	90502–10M04	SPRING, CONICAL RESORTE CONICO	1	1	1	1	1	

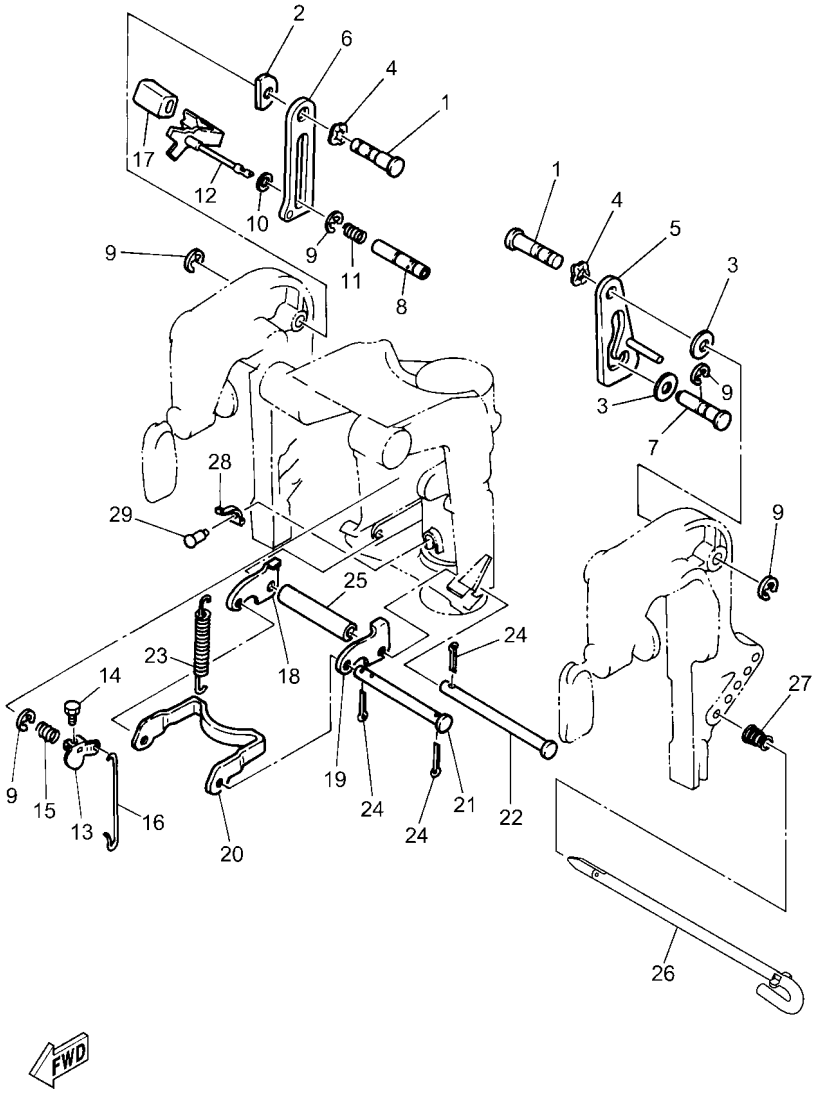

6H9S200-Y160

FIG. 19 BRACKET 2 — SOPORTE 2

REF. NO.	PART NO. CODIGO Nº	DESCRIPTION DESCRIPCION	E40M	40MH	E40W	40WH	40W	REMARKS OBSERVACIONES
28	676–43643–00	SPRING RESORTE	1	1	1	1	1	
29	90260–04002	RIVET, ROUND HEAD REMACHE CABEZA REDONDA	1	1	1	1	1	

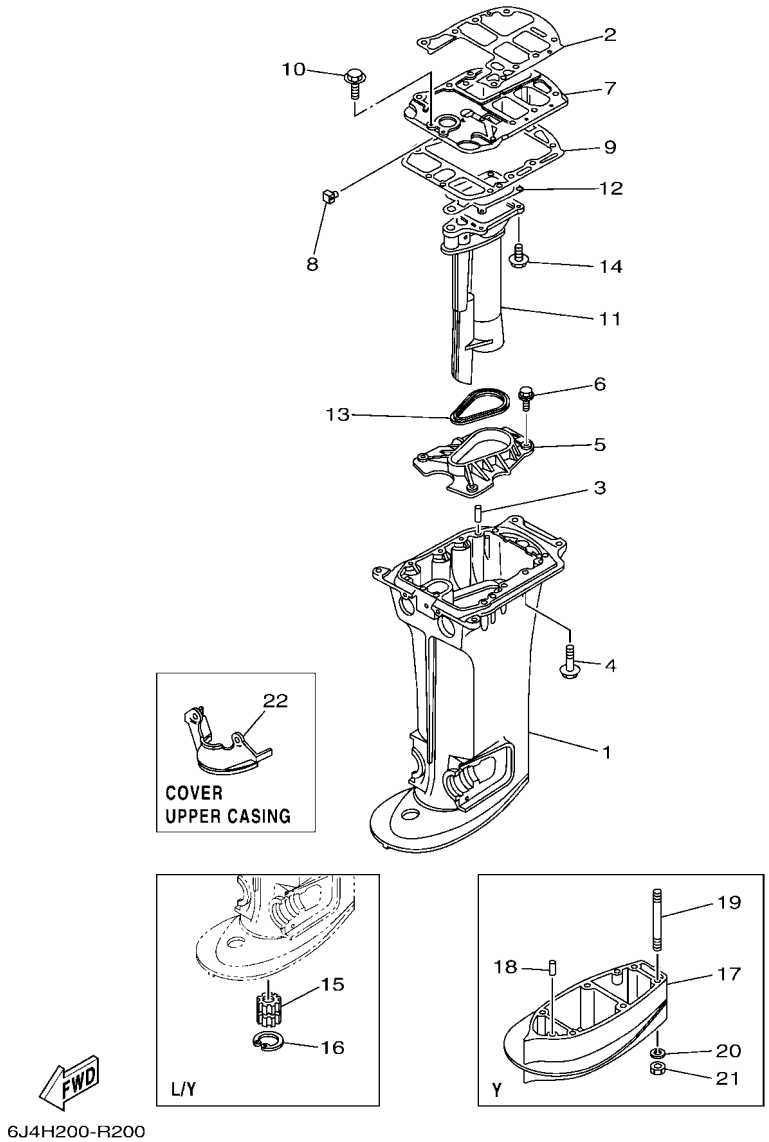

FIG. 20 UPPER CASING 1 — FUNDA SUPERIOR 1

REF. NO.	PART NO. CODIGO Nº	DESCRIPTION DESCRIPCION	E40M	40MH	E40W	40WH	40W	REMARKS OBSERVACIONES
1	676–45111–03–8D	CASING, UPPER CAJA SUPERIOR		1				S(16.6") S(16.6")
	6H9–45111–11–8D	CASING, UPPER CAJA SUPERIOR		1		1	1	L(21.6"),Y(23.5") L(21.6"),Y(23.5")
2	6F5–45113–A2	GASKET, UPPER CASING EMPAQUE		1		1	1	
3	93606–25M00	PIN, DOWEL PASADOR DE CLAVIJA		2		2	2	
4	97E95–08540	BOLT, HEXAGON W/W DEEP RECESS TORNILLO HEXAGONAL CON RONDONA		8		8	8	
5	6F5–41116–00–CA	PROTECTOR PROTECTOR		1		1	1	
6	90105–06M01	BOLT, FLANGE TORNILLO		4		4	4	
7	6F5–41137–03–CA	GUIDE, EXHAUST GUIA DE ESCAPE		1		1	1	
8	6F5–41141–00	ELBOW, WATER MIXING SELLO		1		1	1	
9	676–45114–A1	GASKET, UPPER CASING EMPAQUE		1		1	1	
10	97E95–06525	BOLT, HEXAGON W/W DEEP RECESS TORNILLO HEXAGONAL CON RONDONA		3		3	3	
11	676–41131–01–CA	MANIFOLD, EXT. 1 TUBO MULTIPLE DE ESCAPE		1		1	1	
12	676–41133–A1	GASKET, EXHAUST MANIFOLD 1 EMPAQUE ESCAPE MULTIPLE		1		1	1	
13	676–45127–00	SEAL SELLO DE GOMA		1		1	1	
14	97E95–06520	BOLT, HEXAGON W/W DEEP RECESS TORNILLO HEXAGONAL CON RONDONA		4		4	4	
15	6A0–45318–00	BUSHING, DRIVE SHAFT BUJE, EJE DE MANDO		1		1	1	L(21.6"),Y(23.5") L(21.6"),Y(23.5")
16	93420–36M01	CIRCLIP SEGURO		1		1	1	L(21.6"),Y(23.5") L(21.6"),Y(23.5")
17	6A0–45211–20–8D	EXTENSION EXTENSION		1				Y(23.5") Y(23.5")
18	93606–12019	PIN, DOWEL PASADOR DE CLAVIJA		2				Y(23.5") Y(23.5")
19	90116–08M12	BOLT, STUD ESPARRAGO		6				Y(23.5") Y(23.5")
20	92990–08100	WASHER, SPRING ARANDELA PLANA		6				Y(23.5") Y(23.5")
21	95380–08600	NUT TUERCA		6				Y(23.5") Y(23.5")
22	676–45151–00–8D	COVER, UPPER CASING CUBIERTA FUNDA SUPERIOR		1				S(16.6") S(16.6")
	676–45151–10–8D	COVER, UPPER CASING CUBIERTA FUNDA SUPERIOR		1		1	1	L(21.6"),Y(23.5") L(21.6"),Y(23.5")

FIG. 21 UPPER CASING 2 — FUNDA SUPERIOR 2

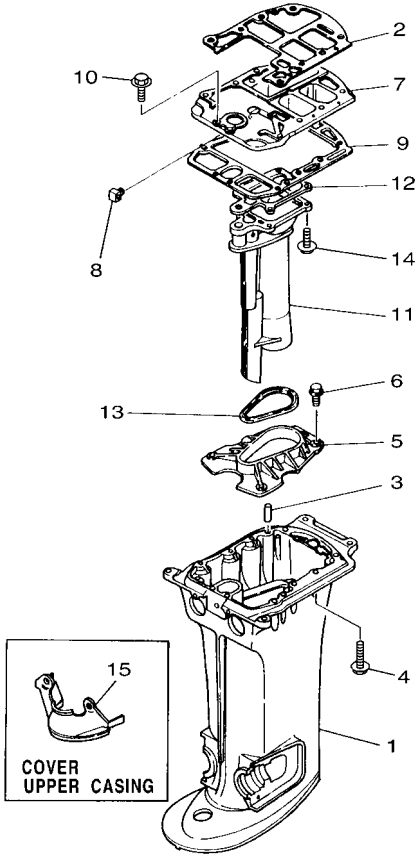

6F5H200-R170

REF. NO.	PART NO. CODIGO Nº	DESCRIPTION DESCRIPCION	E40M	40MH	E40W	40WH	40W	REMARKS OBSERVACIONES
1	676–45111–03–8D	CASING, UPPER CAJA SUPERIOR	1					S(17.5") S(17.5")
	676–45111–15–8D	CASING, UPPER CAJA SUPERIOR	1		1			L(22.5") L(22.5")
2	6F5–45113–A2	GASKET, UPPER CASING EMPAQUE	1		1			
3	93606–25M00	PIN, DOWEL PASADOR DE CLAVIJA	2		2			
4	97E95–08540	BOLT, HEXAGON W/W DEEP RECESS TORNILLO HEXAGONAL CON RONDONA	8		8			
5	6F5–41116–00–CA	PROTECTOR PROTECTOR	1		1			
6	90105–06M01	BOLT, FLANGE TORNILLO	4		4			
7	6F5–41137–03–CA	GUIDE, EXHAUST GUIA DE ESCAPE	1		1			
8	6F5–41141–00	ELBOW, WATER MIXING SELLO	1		1			
9	676–45114–A1	GASKET, UPPER CASING EMPAQUE	1		1			
10	97E95–06525	BOLT, HEXAGON W/W DEEP RECESS TORNILLO HEXAGONAL CON RONDONA	3		3			
11	676–41131–01–CA	MANIFOLD, EXT. 1 TUBO MULTIPLE DE ESCAPE	1		1			
12	676–41133–A1	GASKET, EXHAUST MANIFOLD 1 EMPAQUE ESCAPE MULTIPLE	1		1			
13	676–45127–00	SEAL SELLO DE GOMA	1		1			
14	97E95–06520	BOLT, HEXAGON W/W DEEP RECESS TORNILLO HEXAGONAL CON RONDONA	4		4			
15	676–45151–00–8D	COVER, UPPER CASING CUBIERTA FUNDA SUPERIOR	1					S(17.5") S(17.5")
	676–45151–10–8D	COVER, UPPER CASING CUBIERTA FUNDA SUPERIOR	1		1			L(22.5") L(22.5")

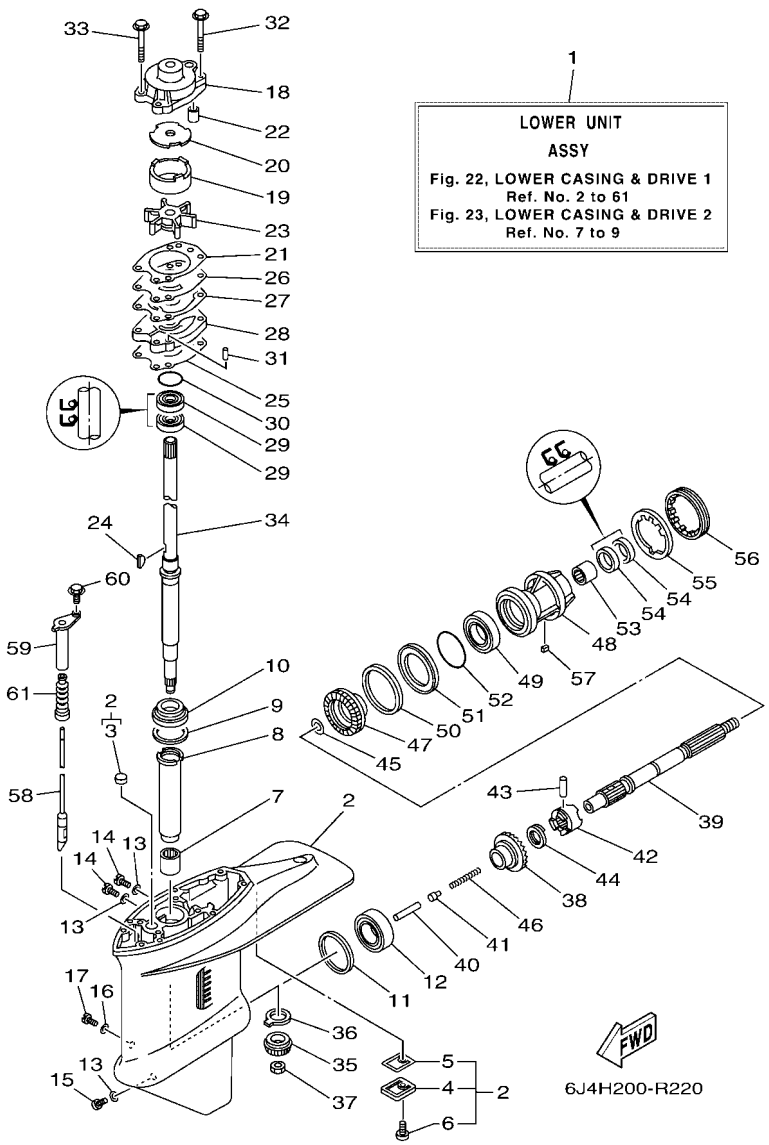

FIG. 22 LOWER CASING & DRIVE 1 — IMPULSOR E INFERIOR 1

REF. NO.	PART NO. CODIGO Nº	DESCRIPTION DESCRIPCION	E40M	40MH	E40W	40WH	40W	REMARKS OBSERVACIONES
1	6J4–45300–05–8D	LOWER UNIT ASSY CONJUNTO UNIDAD INFERIOR		1				S(16.6") S(16.6")
	6J4–45300–15–8D	LOWER UNIT ASSY CONJUNTO UNIDAD INFERIOR		1		1	1	L(21.6") L(21.6")
	6J4–45300–25–8D	LOWER UNIT ASSY CONJUNTO UNIDAD INFERIOR		1				Y(23.5") Y(23.5")
	6H9–45300–15–8D	LOWER UNIT ASSY CONJUNTO UNIDAD INFERIOR		1				L(21.6")-FOR MYS L(21.6")-FOR MYS
2	6J4–W4531–01–8D	CASING, LOWER FUNDA INFERIOR		1		1	1	EXCEPT FOR MYS EXCEPT FOR MYS
	6H9–W4531–12–8D	CASING, LOWER FUNDA INFERIOR		1				FOR MYS FOR MYS
3	90338–22007	.PLUG .TAPON		1		1	1	
4	679–45321–02	.PLATE .PLACA		1		1	1	
5	679–45315–A1	.PACKING, LOWER CASING .EMPAQUE		1		1	1	
6	97880–06016	.SCREW, PAN HEAD .TORNILLO DE CABEZA CON PLANA		1		1	1	
7	93315–32224	BEARING COJINETE DE RODILLOS		1		1	1	
8	679–45536–00	SLEEVE, DRIVE SHAFT CAMISA EJE DE MANDO		1		1	1	
9	663–45587–01	SHIM (T:0.10MM) LAINA (T:0.10MM)		1		1	1	UR UR
	663–45587–10	SHIM (T:0.12MM) LAINA (T:0.12MM)		1		1	1	UR UR
	663–45587–20	SHIM (T:0.15MM) LAINA (T:0.15MM)		1		1	1	UR UR
	663–45587–30	SHIM (T:0.18MM) LAINA (T:0.18MM)		1		1	1	UR UR
	663–45587–40	SHIM (T:0.30MM) LAINA (T:0.30MM)		1		1	1	UR UR
	663–45587–50	SHIM (T:0.40MM) LAINA (T:0.40MM)		1		1	1	UR UR
	663–45587–60	SHIM (T:0.50MM) LAINA (T:0.50MM)		1		1	1	UR UR
10	93332–00001	BEARING COJINETE		1		1	1	
11	663–45567–01	SHIM (T:0.10MM) LAINA (T:0.10MM)		1		1	1	UR UR
	663–45567–10	SHIM (T:0.12MM) LAINA (T:0.12MM)		1		1	1	UR UR
	663–45567–20	SHIM (T:0.15MM) LAINA (T:0.15MM)		1		1	1	UR UR
	663–45567–30	SHIM (T:0.18MM) LAINA (T:0.18MM)		1		1	1	UR UR
	663–45567–40	SHIM (T:0.30MM) LAINA (T:0.30MM)		1		1	1	UR UR
	663–45567–50	SHIM (T:0.40MM) LAINA (T:0.40MM)		1		1	1	UR UR
	663–45567–60	SHIM (T:0.50MM) LAINA (T:0.50MM)		1		1	1	UR UR

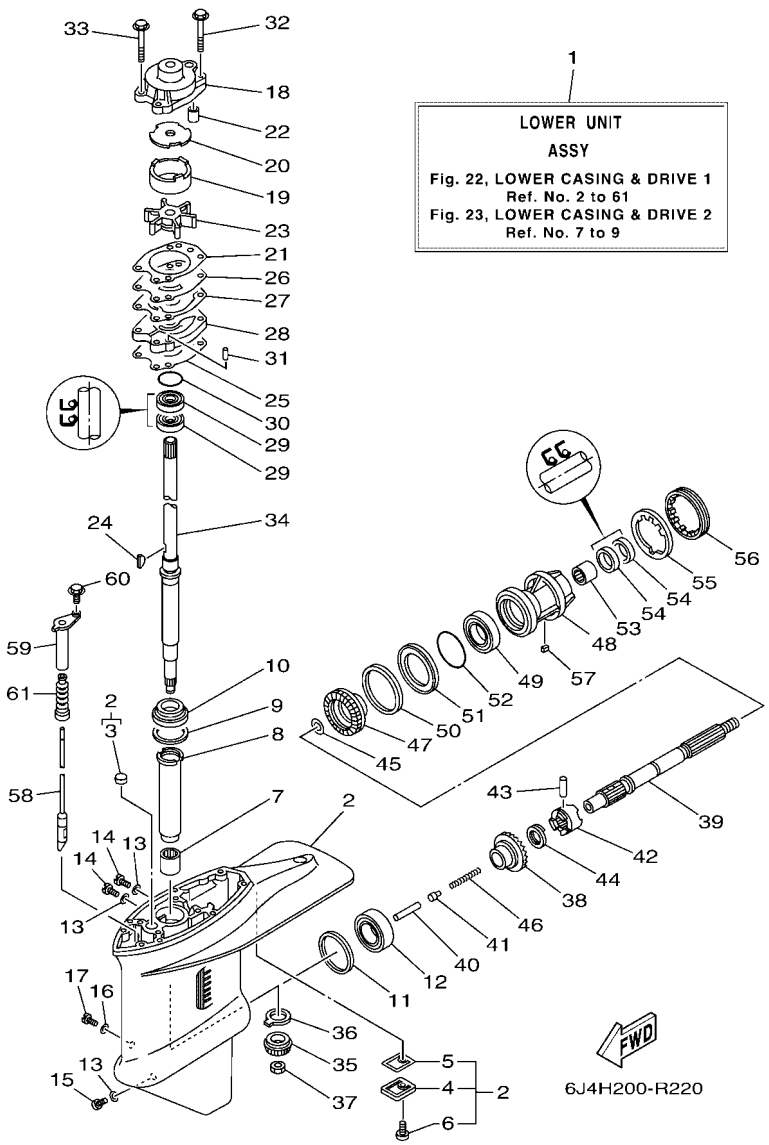

FIG. 22 LOWER CASING & DRIVE 1 — IMPULSOR E INFERIOR 1

REF. NO.	PART NO. CODIGO Nº	DESCRIPTION DESCRIPCION	E40M	40MH	E40W	40WH	40W	REMARKS OBSERVACIONES
12	93332–00003	BEARING COJINETE		1		1	1	
13	90430–08003	GASKET JUNTA		3		3	3	
14	90340–08002	PLUG, STRAIGHT SCREW TORNILLO, DE DRENAJE		2		2	2	
15	688–45341–10	PLUG, DRAIN TAPON, DREN		1		1	1	
16	90430–06M03	GASKET JUNTA		1		1	1	
17	90157–06015	SCREW, PAN HEAD TORNILLO CABEZA CONICA PLANA		1		1	1	
18	676–44311–00	HOUSING, WATER PUMP CAJA BOMBA DE AGUA		1		1	1	
19	676–44322–40	INSERT, CARTRIDGE CARTUCHO		1		1	1	FOR CHROMATE FOR CHROMATE
20	676–44321–40	INNER PLATE, CARTRIDGE PLACA INTERIOR CARTUCHO		1		1	1	FOR CHROMATE FOR CHROMATE
21	676–44315–A1	GASKET, WATER PUMP EMPAQUE		1		1	1	
22	663–44366–01	DAMPER, WATER SEAL 2 GOMA DEL SELLO DE AGUA 2		1		1	1	
23	6F5–44352–00	IMPELLER IMPULSOR		1		1	1	
24	90280–04M00	KEY, WOODRUFF CUNA WOODRUFF		1		1	1	
25	679–44316–A1	GASKET, WATER PUMP EMPAQUE		1		1	1	
26	676–44323–40	OUTER PLATE, CARTRIDGE PLACA EXTERIOR DEL CARTUCHO		1		1	1	FOR CHROMATE FOR CHROMATE
27	676–44324–A1	GASKET, CARTRIDGE EMPAQUE		1		1	1	
28	679–44341–00	HOUSING, WATER PUMP CAJA BOMBA DE AGUA		1		1	1	
29	93101–22M00	OIL SEAL SELLO ACEITE		2		2	2	
30	93210–41042	O-RING ANILLO O		1		1	1	
31	93604–08062	PIN, DOWEL PASADOR DE CLAVIJA		2		2	2	
32	97E95–08555	BOLT, HEXAGON W/W DEEP RECESS TORNILLO HEXAGONAL CON RONDONA		2		2	2	
33	97E95–08545	BOLT, HEXAGON W/W DEEP RECESS TORNILLO HEXAGONAL CON RONDONA		2		2	2	
34	679–45501–00	DRIVE SHAFT COMP. EJE DE MANDO COMPL.		1				S(16.6") S(16.6")
	679–45501–10	DRIVE SHAFT COMP. EJE DE MANDO COMPL.		1		1	1	L(21.6") L(21.6")
	6A0–45501–20	DRIVE SHAFT COMP. EJE DE MANDO COMPL.		1				Y(23.5") Y(23.5")
35	6H9–45551–00	PINION (13T) PINON (13T)		1		1	1	
36	663–45552–00	BEARING, PLAIN COJINETE PLANO		1		1	1	

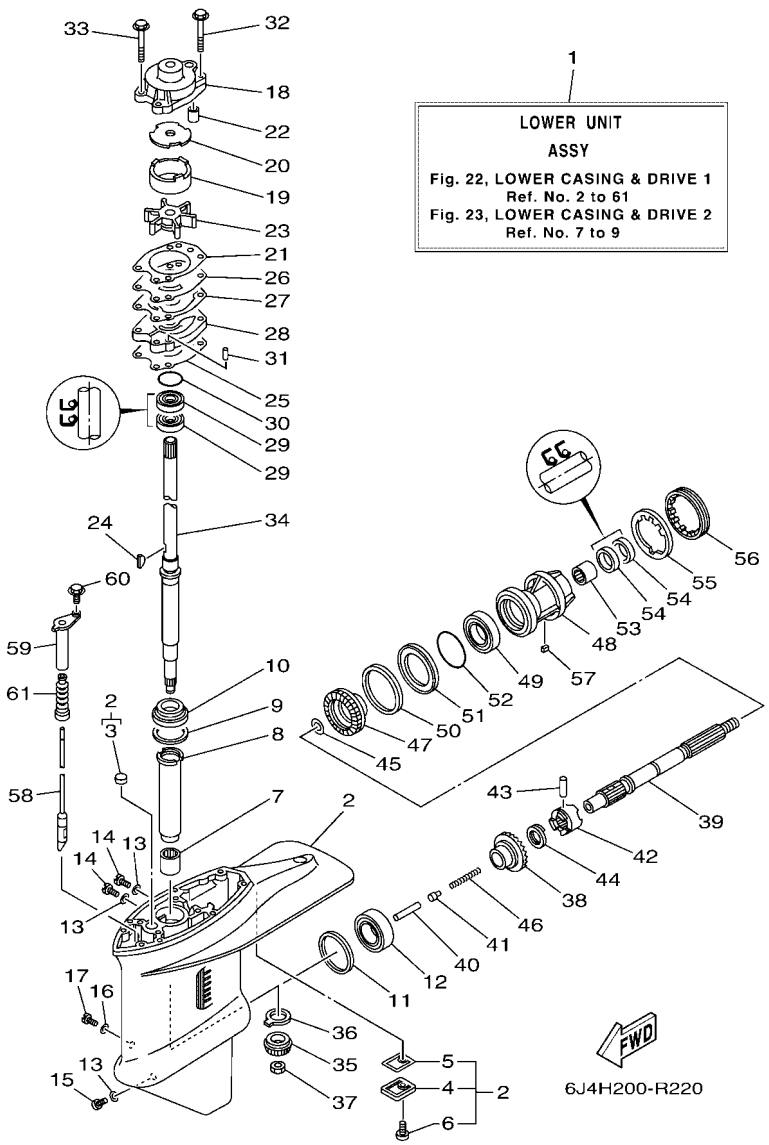

FIG. 22 LOWER CASING & DRIVE 1 — IMPULSOR E INFERIOR 1

REF. NO.	PART NO. CODIGO Nº	DESCRIPTION DESCRIPCION	E40M	40MH	E40W	40WH	40W	REMARKS OBSERVACIONES
37	90170–12138	NUT TUERCA		1		1	1	
38	679–45560–00	GEAR 1 (26T) ENGRANAJE 1 (26T)		1		1	1	
39	679–45611–01	SHAFT, PROPELLER EJE PROPUSOR		1		1	1	
40	676–45635–00	PLUNGER, SHIFT EMBOLO DE CAMBIO		1		1	1	
41	663–45634–00	SLIDE, SHIFT DESLIZADOR, CAMBIO		1		1	1	
42	663–45631–01	CLUTCH, DOG EMBRAGUE DE GARRA		1		1	1	
43	90250–06023	PIN, STRAIGHT PASADOR CILINDRICO		1		1	1	
44	663–45633–00	RING, CROSS PIN ANILLO DE PASADOR		1		1	1	
45	90201–22429	WASHER, PLATE ARANDELA PLANA		1		1	1	
46	90501–16M01	SPRING, COMPRESSION RESORTE DE COMPRESION		1		1	1	
47	679–45571–00	GEAR 2 (26T) ENGRANAJE 2 (26T)		1		1	1	
48	679–45331–00	HOUSING, BEARING CAJA DE COJINETE		1		1	1	
49	93306–00702	BEARING COJINETE		1		1	1	
50	663–45577–01	SHIM (T:0.10MM) LAINA (T:0.10MM)		1		1	1	UR UR
	663–45577–10	SHIM (T:0.12MM) LAINA (:0.12MM)		1		1	1	UR UR
	663–45577–20	SHIM (T:0.15MM) LAINA (T:0.15MM)		1		1	1	UR UR
	663–45577–30	SHIM (T:0.18MM) LAINA (T:0.18MM)		1		1	1	UR UR
	663–45577–40	SHIM (T:0.30MM) LAINA (T:0.30MM)		1		1	1	UR UR
	663–45577–50	SHIM (T:0.40MM) LAINA (T:0.40MM)		1		1	1	UR UR
	663–45577–60	SHIM (T:0.50MM) LAINA (T:0.50MM)		1		1	1	UR UR
51	663–45576–00	WASHER, THRUST 2 ARANDELA DE EMPUJE AXIAL 2		1		1	1	
52	93210–66M98	O-RING ANILLO O		1		1	1	
53	93317–22204	BEARING COJINETE		1		1	1	
54	93101–22M00	OIL SEAL SELLO ACEITE		2		2	2	
55	90214–48M03	WASHER, CLAW ARANDELA DE POSICION		1		1	1	
56	697–45384–02	NUT TUERCA		1		1	1	
57	90282–04010	KEY, STRAIGHT CHAVETA, RECTA		1		1	1	

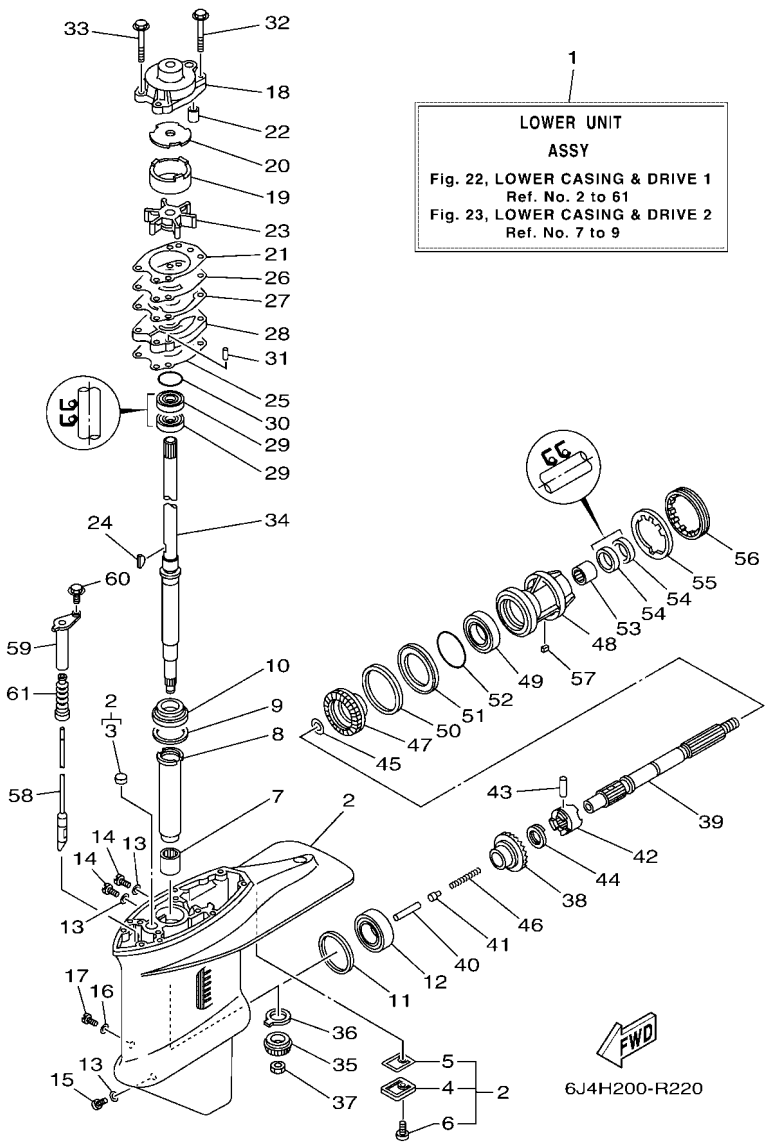

FIG. 22 LOWER CASING & DRIVE 1 — IMPULSOR E INFERIOR 1

REF. NO.	PART NO. CODIGO Nº	DESCRIPTION DESCRIPCION	E40M	40MH	E40W	40WH	40W	REMARKS OBSERVACIONES
58	679–44150–00	SHIFT CAM ASSY CONJUNTO EJE LEVA COMPL.		1				S(16.6") S(16.6")
	679–44150–10	SHIFT CAM ASSY CONJUNTO EJE LEVA COMPL.		1		1	1	L(21.6") L(21.6")
	6A0–44150–20	SHIFT CAM ASSY CONJUNTO EJE LEVA COMPL.		1				Y(23.5") Y(23.5")
59	679–44152–00	BUSHING, SHIFT CAM BUJE LEVA DE CAMBIO		1		1	1	
60	97E95–06518	BOLT, HEXAGON W/W DEEP RECESS TORNILLO HEXAGONAL CON RONDONA		1		1	1	
61	650–44147–00	BOOT, SHIFT ROD HULE DE VARILLA		1		1	1	

FIG. 23 LOWER CASING & DRIVE 2 — IMPULSOR E INFERIOR 2

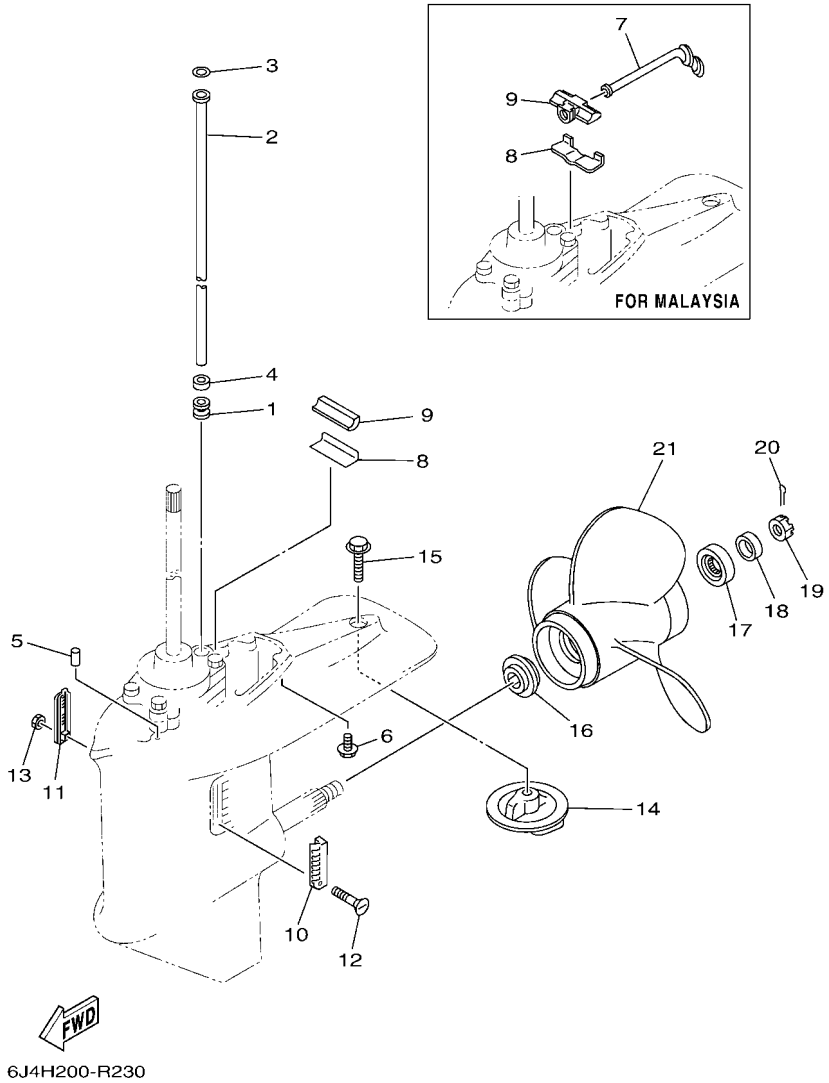

REF. NO.	PART NO. CODIGO Nº	DESCRIPTION DESCRIPCION	E40M	40MH	E40W	40WH	40W	REMARKS OBSERVACIONES
1	663–44367–01	DAMPER, WATER SEAL 3 GOMA DEL SELLO DE AGUA 3		1		1	1	
2	676–44361–00	TUBE, WATER 1 TUBO DE AGUA 1		1				S(16.6") S(16.6")
	676–44361–10	TUBE, WATER 1 TUBO DE AGUA 1		1		1	1	L(21.6") L(21.6")
	6A0–44361–20	TUBE, WATER 1 TUBO DE AGUA 1		1				Y(23.5") Y(23.5")
3	90202–12060	WASHER, PLATE ARANDELA DE PLANA		1		1	1	
4	90430–12072	GASKET JUNTA		1		1	1	
5	93606–12019	PIN, DOWEL PASADOR DE CLAVIJA		2		2	2	
6	97E75–08530	BOLT, HEXAGON W/W DEEP RECESS TORNILLO HEXAGONAL CON RONDONA		6		6	6	S(16.6"),L(21.6") S(16.6"),L(21.6")
7	6H9–44362–00	TUBE, WATER 2 TUBO DE AGUA 2		1				FOR MYS FOR MYS
8	663–45376–00	GUIDE, SEAL DAMPER GUIA DE SELLO GOMA		1		1	1	EXCEPT FOR MYS EXCEPT FOR MYS
	6H9–45376–00	GUIDE, SEAL DAMPER GUIA DE SELLO GOMA		1				FOR MYS FOR MYS
9	663–45375–00	DAMPER, SEAL GOMA DE SELLO		1		1	1	EXCEPT FOR MYS EXCEPT FOR MYS
	6H9–45375–00	DAMPER, SEAL GOMA DE SELLO		1				FOR MYS FOR MYS
10	688–45214–02	COVER, WATER INLET 1 CUBIERTA, ENTRADA AGUA 1		1		1	1	
11	688–45215–02	COVER, WATER INLET 2 CUBIERTA, ENTRADA AGUA 2		1		1	1	
12	90152–05M09	SCREW, COUNTERSUNK TORNILLO EMBUTIDO		1		1	1	
13	90185–05002	NUT, NYLON TUERCA AUTOBLOCANTE		1		1	1	
14	679–45371–00	TAB-TRIM QUILLA ESTABILIZADOR		1		1	1	
15	97E95–10530	BOLT, HEXAGON W/W DEEP RECESS TORNILLO HEXAGONAL CON RONDONA		1		1	1	
16	663–45987–02	SPACER 1 ESPACIADOR 1		1		1	1	
17	66T–45997–00	SPACER 2 ESPACIADOR 2		1		1	1	
18	90389–22M01	BUSH BUJE		1		1	1	
19	90171–16011	NUT, CASTLE TUERCA ENTALLADA		1		1	1	
20	91490–30025	PIN. COTTER CHAVETA		1		1	1	
21	663–45956–01	PROPELLER (3X12-1/4"X9"-G) PROPELA (3X12-1/4"X9"-G)		1		1	1	UR UR
	663–45954–01	PROPELLER (3X11-3/4"X10"-G) PROPELA (3X11-3/4"X10"-G)		1		1	1	UR UR
	69W–45947–00	PROPELLER (3X11-5/8"X11"-G) PROPELA (3X11-5/8"X11"-G)		1		1	1	UR UR

FIG. 23 LOWER CASING & DRIVE 2 — IMPULSOR E INFERIOR 2

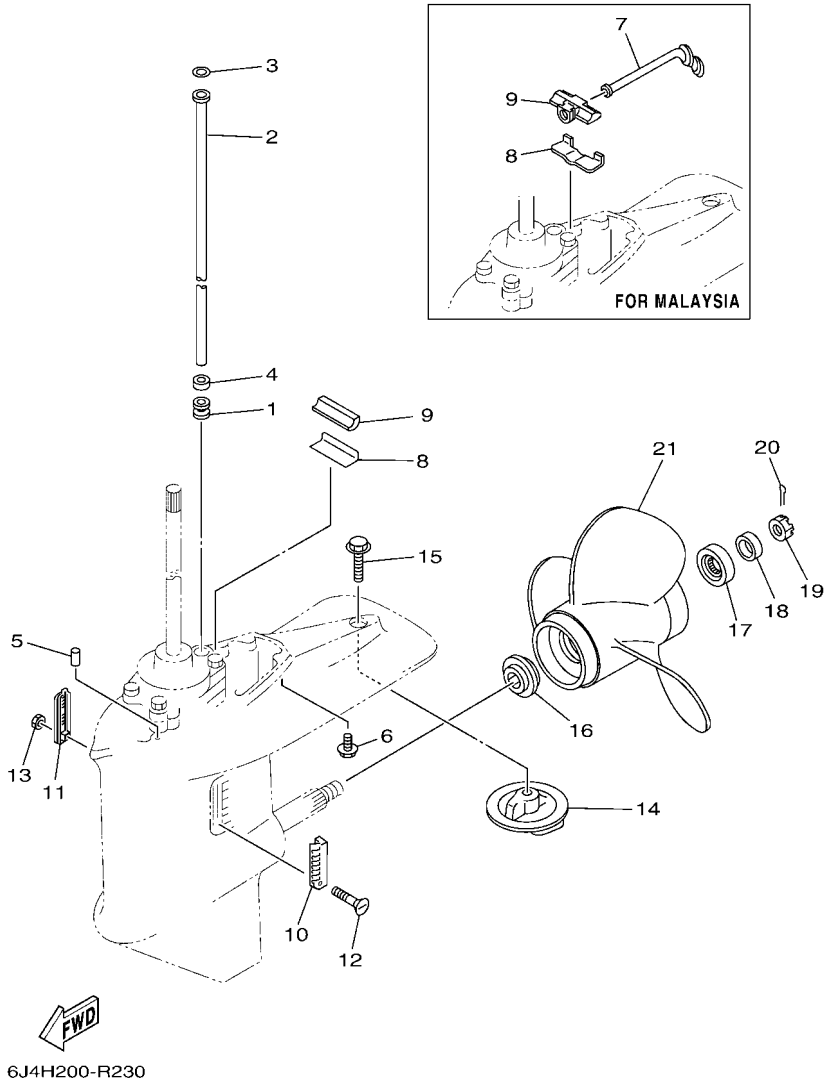

REF. NO.	PART NO. CODIGO Nº	DESCRIPTION DESCRIPCION	E40M	40MH	E40W	40WH	40W	REMARKS OBSERVACIONES
21	663–45972–60	PROPELLER (3X12"X11"-G) PROPELA (3X12"X11"-G)		1		1	1	UR UR
	663–45952–02	PROPELLER (3X11-3/8"X12"-G) PROPELA (3X11-3/8"X12"-G)		1		1	1	UR UR
	69W–45952–00	PROPELLER (3X11-3/8"X12"-G) PROPELA (3X11-3/8"X12"-G)		1		1	1	UR UR
	663–45970–60	PROPELLER (3X11-3/4"X12"-G) PROPELA (3X11-3/4"X12"-G)		1		1	1	UR UR
	69W–45945–00	PROPELLER (3X11-1/8"X13"-G) PROPELA (3X11-1/8"X13"-G)		1		1	1	UR UR
	663–45974–60	PROPELLER (3X11-1/2"X13"-G) PROPELA (3X11-1/2"X13"-G)		1		1	1	UR UR
	663–45930–00	PROPELLER (3X10-1/4"X14"-G) PROPELA (3X10-1/4"X14"-G)		1		1	1	UR UR
	663–45958–01	PROPELLER (3X11-1/4"X14"-G) PROPELA (3X11-1/4"X14"-G)		1		1	1	UR UR
	69W–45943–00	PROPELLER (3X11"X15"-G) PROPELA (3X11"X15"-G)		1		1	1	UR UR
	663–45976–00	PROPELLER (3X10-1/4"X15"-G) PROPELA (3X10-1/4"X15"-G)		1		1	1	UR UR
	663–45949–01	PROPELLER (3X10-3/4"X16"-G) PROPELA (3X10-3/4"X16"-G)		1		1	1	UR UR
	663–45978–00	PROPELLER (3X10-1/4"X16"-G) PROPELA (3X10-1/4"X16"-G)		1		1	1	UR UR
	663–45941–01	PROPELLER (3X10-3/4"X17"-G) PROPELA (3X10-3/4"X17"-G)		1		1	1	UR UR

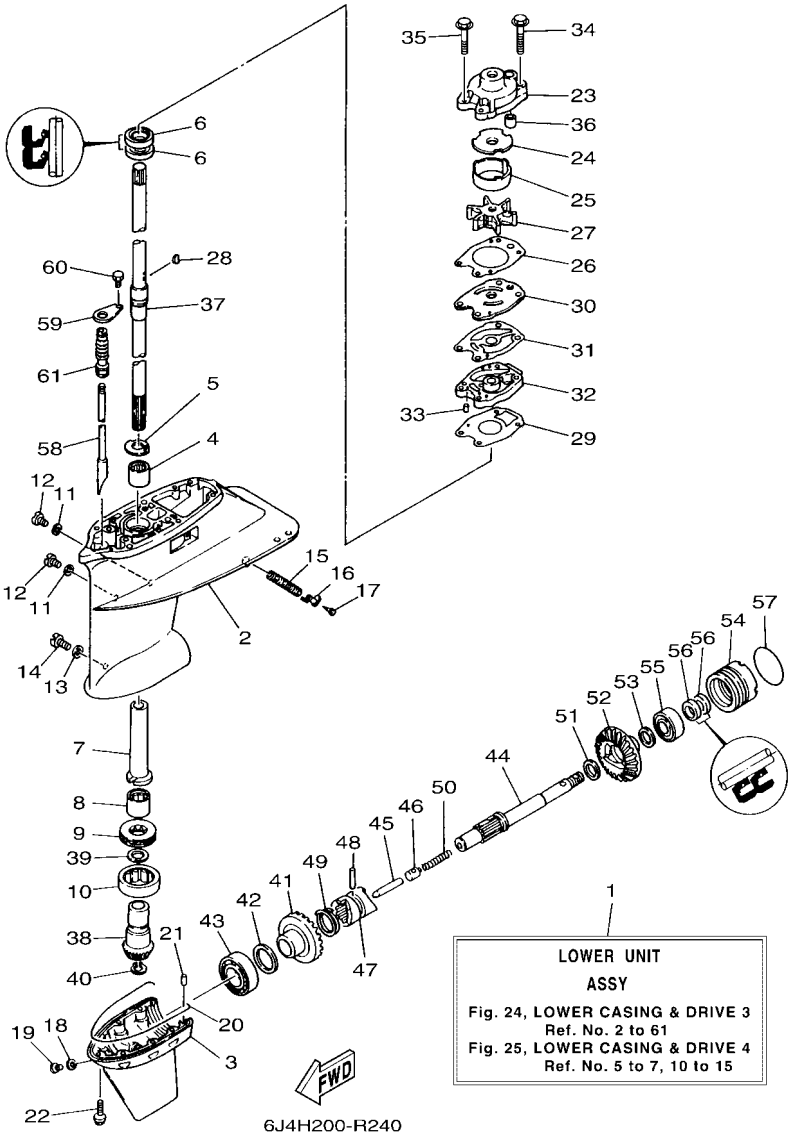

FIG. 24 LOWER CASING & DRIVE 3 — IMPULSOR E INFERIOR 3

REF. NO.	PART NO. CODIGO Nº	DESCRIPTION DESCRIPCION	E40M	40MH	E40W	40WH	40W	REMARKS OBSERVACIONES
1	6F6–45300–05–8D	LOWER UNIT ASSY CONJUNTO UNIDAD INFERIOR	1					S(17.5") S(17.5")
	6F6–45300–15–8D	LOWER UNIT ASSY CONJUNTO UNIDAD INFERIOR	1		1			L(22.5") L(22.5")
2	6F5–45311–02–8D	CASING, LOWER FUNDA INFERIOR	1		1			
3	6F5–45312–01–8D	CASING, LOWER FUNDA INFERIOR	1		1			
4	93315–217U0	BEARING COJINETE DE RODILLOS	1		1			
5	676–45533–00	SHIM ARANDELA DE EMPUJE AXIAL	1		1			
6	93101–22M00	OIL SEAL SELLO ACEITE	2		2			
7	676–45536–00	SLEEVE, DRIVE SHAFT CAMISA EJE DE MANDO	1		1			
8	93315–324U1	BEARING COJINETE DE RODILLOS	1		1			
9	93342–624U0	BEARING COJINETES CON RODAMIENTOS	1		1			
10	93390–000U0	BEARING COJINETE DE RODILLOS	1		1			
11	90430–08003	GASKET JUNTA	2		2			
12	90340–08002	PLUG, STRAIGHT SCREW TORNILLO, DE DRENAJE	2		2			
13	90430–06M03	GASKET JUNTA	1		1			
14	90157–06015	SCREW, PAN HEAD TORNILLO CABEZA CONICA PLANA	1		1			
15	676–45215–01	COVER, WATER INLET 2 CUBIERTA, ENTRADA AGUA 2	1		1			
16	6F5–45279–01	CAP TAPA	1		1			
17	97780–60525	SCREW, TAPPING TORNILLO DE CABEZA DE CONO ACH	1		1			
18	90430–08003	GASKET JUNTA	1		1			
19	688–45341–10	PLUG, DRAIN TAPON, DREN	1		1			
20	676–45314–00	SEAL, LOWER CASING SELLO DE FUNDA INFERIOR	1		1			
21	93604–09068	PIN, DOWEL PASADOR DE CLAVIJA	1		1			
22	90105–06M01	BOLT, FLANGE TORNILLO	9		9			
23	676–44311–00	HOUSING, WATER PUMP CAJA BOMBA DE AGUA	1		1			
24	676–44321–40	INNER PLATE, CARTRIDGE PLACA INTERIOR CARTUCHO	1		1			FOR CHROMATE FOR CHROMATE
25	676–44322–40	INSERT, CARTRIDGE CARTUCHO	1		1			FOR CHROMATE FOR CHROMATE
26	676–44315–A1	GASKET, WATER PUMP EMPAQUE	1		1			

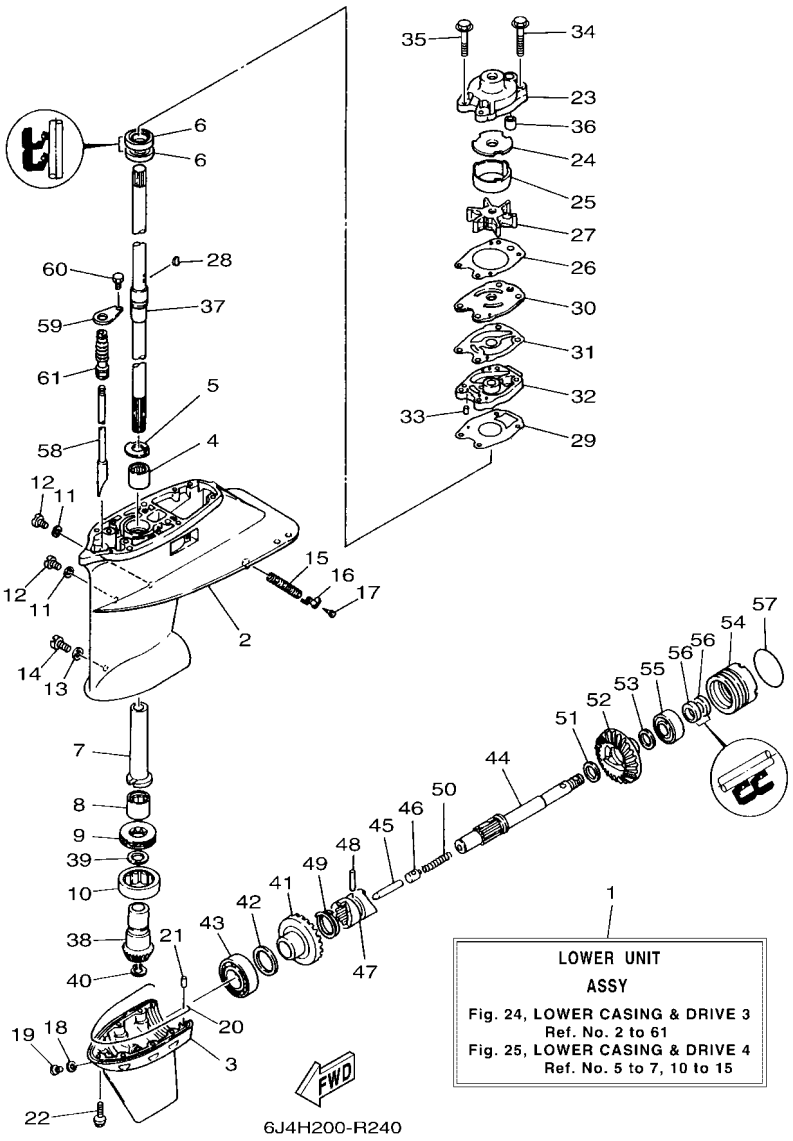

FIG. 24 LOWER CASING & DRIVE 3 — IMPULSOR E INFERIOR 3

REF. NO.	PART NO. CODIGO Nº	DESCRIPTION DESCRIPCION	E40M	40MH	E40W	40WH	40W	REMARKS OBSERVACIONES
27	6F5–44352–00	IMPELLER IMPULSOR	1		1			
28	90280–04M00	KEY, WOODRUFF CUNA WOODRUFF	1		1			
29	676–44316–A1	GASKET, WATER PUMP EMPAQUE	1		1			
30	676–44323–40	OUTER PLATE, CARTRIDGE PLACA EXTERIOR DEL CARTUCHO	1		1			FOR CHROMATE FOR CHROMATE
31	676–44324–A1	GASKET, CARTRIDGE EMPAQUE	1		1			
32	676–44341–01	HOUSING, WATER PUMP CAJA BOMBA DE AGUA	1		1			
33	93604–08062	PIN, DOWEL PASADOR DE CLAVIJA	3		3			
34	97E95–08555	BOLT, HEXAGON W/W DEEP RECESS TORNILLO HEXAGONAL CON RONDONA	2		2			
35	97E95–08545	BOLT, HEXAGON W/W DEEP RECESS TORNILLO HEXAGONAL CON RONDONA	2		2			
36	663–44366–01	DAMPER, WATER SEAL 2 GOMA DEL SELLO DE AGUA 2	1		1			
37	676–45501–00	DRIVE SHAFT COMP. EJE DE MANDO COMPL.	1					S(17.5") S(17.5")
	676–45501–10	DRIVE SHAFT COMP. EJE DE MANDO COMPL.	1		1			L(22.5") L(22.5")
38	6F5–45551–01	PINION (13T) PINON (13T)	1		1			
39	676–45587–00	SHIM (T:0.70MM) LAINA (T:0.70MM)	1		1			UR UR
	676–45587–10	SHIM (T:0.75MM) LAINA (T:0.75MM)	1		1			UR UR
	676–45587–20	SHIM (T:0.80MM) LAINA (T:0.80MM)	1		1			UR UR
	676–45587–30	SHIM (T:0.85MM) LAINA (T:0.85MM)	1		1			UR UR
40	93410–16007	CIRCLIP SEGURO	1		1			
41	6F5–45560–01	GEAR 1 (24T) ENGRANAJE 1 (24T)	1		1			
42	676–45567–00	SHIM (T:0.7MM) LAINA (T:0.7MM)	1		1			UR UR
	676–45567–10	SHIM (T:0.8MM) LAINA (T:0.8MM)	1		1			UR UR
	676–45567–20	SHIM (T:0.9MM) LAINA (T:0.9MM)	1		1			UR UR
	676–45567–30	SHIM (T:1.0MM) LAINA (T:1.0MM)	1		1			UR UR
	676–45567–40	SHIM (T:1.1MM) LAINA (T:1.1MM)	1		1			UR UR
	676–45567–50	SHIM (T:1.2MM) LAINA (T:1.2MM)	1		1			UR UR
43	93332–000U0	BEARING COJINETE	1		1			
44	6F6–45611–01	SHAFT, PROPELLER EJE PROPUSOR	1		1			

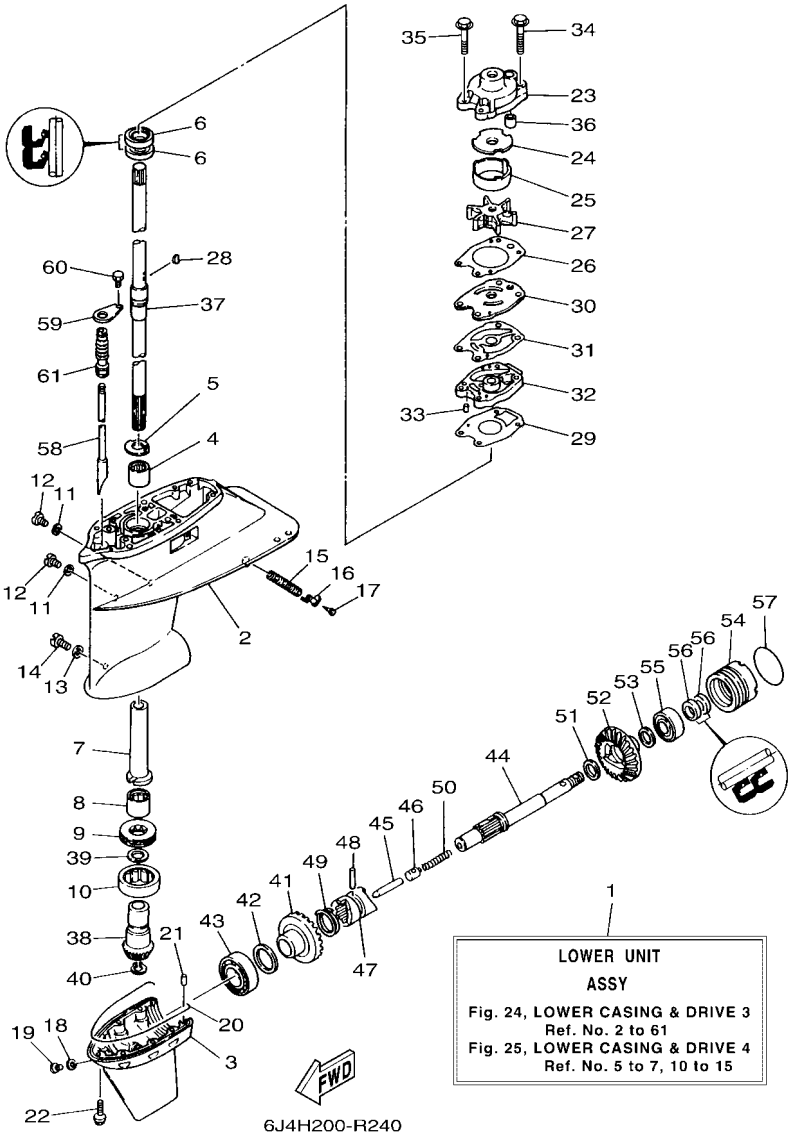

FIG. 24 LOWER CASING & DRIVE 3 — IMPULSOR E INFERIOR 3

REF. NO.	PART NO. CODIGO Nº	DESCRIPTION DESCRIPCION	E40M	40MH	E40W	40WH	40W	REMARKS OBSERVACIONES
45	676–45635–00	PLUNGER, SHIFT EMBOLO DE CAMBIO	1		1			
46	663–45634–00	SLIDE, SHIFT DESLIZADOR, CAMBIO	1		1			
47	663–45631–01	CLUTCH, DOG EMBRAGUE DE GARRA	1		1			
48	90250–06023	PIN, STRAIGHT PASADOR CILINDRICO	1		1			
49	663–45633–00	RING, CROSS PIN ANILLO DE PASADOR	1		1			
50	90501–16M01	SPRING, COMPRESSION RESORTE DE COMPRESION	1		1			
51	90201–20MA8	WASHER, PLATE ARANDELA PLANA	1		1			
52	6F5–45570–00	GEAR 2 (24T) ENGRANAJE 2 (24T)	1		1			
53	676–45577–00	SHIM (T:1.8MM) LAINA (T:1.8MM)	1		1			UR UR
	676–45577–10	SHIM (T:1.9MM) LAINA (T:1.9MM)	1		1			UR UR
	676–45577–20	SHIM (T:2.0MM) LAINA (T:2.0MM)	1		1			UR UR
	676–45577–30	SHIM (T:2.1MM) LAINA (T:2.1MM)	1		1			UR UR
	676–45577–40	SHIM (T:2.2MM) LAINA (T:2.2MM)	1		1			UR UR
	676–45577–50	SHIM (T:2.3MM) LAINA (T:2.3MM)	1		1			UR UR
	676–45577–60	SHIM (T:2.4MM) LAINA (T:2.4MM)	1		1			UR UR
	676–45577–70	SHIM (T:2.5MM) LAINA (T:2.5MM)	1		1			UR UR
54	676–45361–01–CA	CAP, LOWER CASING FUNDA INFERIOR	1		1			
55	93306–20401	BEARING COJINETE	1		1			
56	93101–20048	OIL SEAL SELLO ACEITE	2		2			
57	93210–57M00	O-RING ANILLO O	1		1			
58	676–44150–00	SHIFT CAM ASSY CONJUNTO EJE LEVA COMPL.	1					S(17.5") S(17.5")
	676–44150–10	SHIFT CAM ASSY CONJUNTO EJE LEVA COMPL.	1		1			L(22.5") L(22.5")
59	650–45321–00	PLATE PLACA	1		1			
60	97D95–06010	BOLT, HEXAGON DEEP RECESS TORNILLO HEXAGONAL	1		1			
61	650–44147–00	BOOT, SHIFT ROD HULE DE VARILLA	1		1			

FIG. 25 LOWER CASING & DRIVE 4 — IMPULSOR E INFERIOR 4

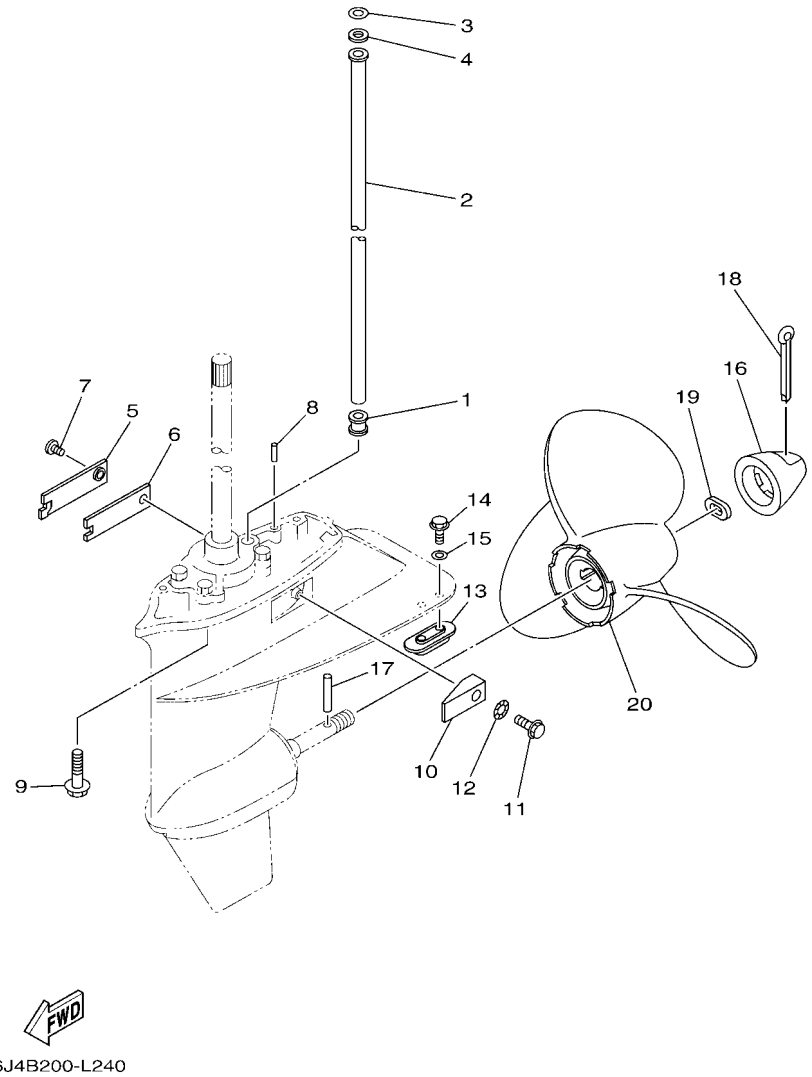

REF. NO.	PART NO. CODIGO Nº	DESCRIPTION DESCRIPCION	E40M	40MH	E40W	40WH	40W	REMARKS OBSERVACIONES
1	663–44367–01	DAMPER, WATER SEAL 3 GOMA DEL SELLO DE AGUA 3	1		1			
2	676–44361–00	TUBE, WATER 1 TUBO DE AGUA 1	1					S(17.5") S(17.5")
	676–44361–10	TUBE, WATER 1 TUBO DE AGUA 1	1		1			L(22.5") L(22.5")
3	90202–12060	WASHER, PLATE ARANDELA DE PLANA	1		1			
4	90430–12072	GASKET JUNTA	1		1			
5	6F5–45214–00	COVER, WATER INLET 1 CUBIERTA, ENTRADA AGUA 1	1		1			
6	6F5–45252–00	SEAT ASIENTO	1		1			
7	90152–06M06	SCREW, COUNTERSUNK TORNILLO EMBUTIDO	1		1			
8	93606–12019	PIN, DOWEL PASADOR DE CLAVIJA	2		2			
9	97E75–08530	BOLT, HEXAGON W/W DEEP RECESS TORNILLO HEXAGONAL CON RONDONA	6		6			
10	6F5–45251–02	ANODE CATODE	1		1			
11	90105–06M21	BOLT, FLANGE TORNILLO	1		1			
12	92990–06300	WASHER, INTERNAL TOOTH ARANDELA PLANA	1		1			
13	6E0–45251–12	ANODE CATODE	1		1			
14	95D95–06016	BOLT, FLANGE DEEP RECESS CERROJO, REBORDE HUECO PROFUND	2		2			
15	92990–06300	WASHER, INTERNAL TOOTH ARANDELA PLANA	2		2			
16	676–45616–A0	NUT, PROPELLER TUERCA DE HELICE	1		1			
17	6F6–45614–00	PIN, DRIVE PASADOR	1		1			
18	91490–40040	PIN. COTTER CHAVETA	1		1			
19	90206–16M03	WASHER, WAVE ARANDELA ONDULADA	1		1			
20	676–45956–61	PROPELLER (3X11-3/4"X7-1/2"-H) PROPELA (3X11-3/4"X7-1/2"-H)	1		1			UR UR
	676–45947–62	PROPELLER (3X11-3/4"X8-3/4"-H) PROPELA (3X11-3/4"X8-3/4"-H)	1		1			UR UR
	676–45945–62	PROPELLER (3X11-3/4"X10"-H) PROPELA (3X11-3/4"X10"-H)	1		1			UR UR
	676–45941–62	PROPELLER (3X11-1/2"X11"-H) PROPELA (3X11-1/2"X11"-H)	1		1			UR UR
	676–45943–62	PROPELLER (3X11-1/2"X12"-H) PROPELA (3X11-1/2"X12"-H)	1		1			UR UR
	676–45949–62	PROPELLER (3X11-1/2"X13-1/2"-H PROPELA (3X11-1/2"X13-1/2"-H)	1		1			UR UR
	676–45952–62	PROPELLER (3X11-1/2"X13"-H) PROPELA (3X11-1/2"X13"-H)	1		1			UR UR

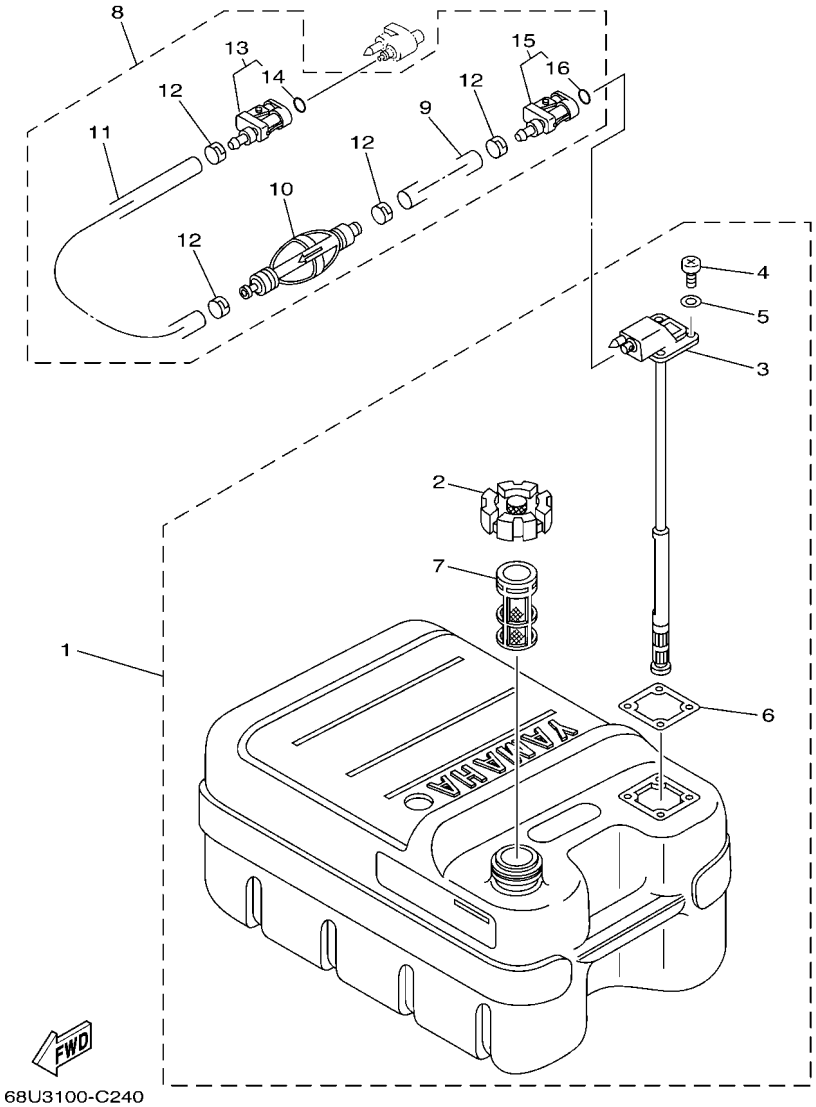

FIG. 26 FUEL TANK 1 — DEPOSITO DE COMBUSTIBLE 1

REF. NO.	PART NO. CODIGO Nº	DESCRIPTION DESCRIPCION	E40M	40MH	E40W	40WH	40W	REMARKS OBSERVACIONES
1	6YJ–24201–21	FUEL TANK ASSY (24L) TANQUE DEL COMBUSTIBLE (24L)	1	1	1	1	1	AP EXCEPT FOR TWN AP EXCEPT FOR TWN
2	6YJ–24610–01	.CAP ASSY .TAPA COMPLETA	1	1	1	1	1	
3	6YJ–24260–11	.FUEL METER ASSY .MEDIDOR DE COMBUSTIBLE COMPL.	1	1	1	1	1	
4	90157–05M19	.SCREW, PAN HEAD .TORNILLO CABEZA CONICA PLANA	4	4	4	4	4	
5	6Y1–24329–00	.SEAL .SELLO	4	4	4	4	4	
6	6Y1–24268–01	.GASKET, FUEL METER .EMPAQ MEDIDOR DE COMBUSTIBLE	1	1	1	1	1	
7	6YJ–24167–00	.STRAINER .COLADOR	1	1	1	1	1	
8	61J–24306–05	FUEL PIPE COMP. 1 TUBO COMBUST. COMPL 1	1	1	1	1	1	AP EXCEPT FOR TWN AP EXCEPT FOR TWN
9	90445–11M58	.HOSE (L2050) .MANGUERA (L2050)	1	1	1	1	1	
10	61J–24360–00	.PRIMER PUMP ASSY .SOPORTE BOMBA	1	1	1	1	1	
11	90445–11M57	.HOSE (L850) .TUBO (L850)	1	1	1	1	1	
12	650–24351–51	.BAND 1 .ABRAZADERA 1	4	4	4	4	4	
13	6G1–24305–05	.FUEL PIPE JOINT COMP. 2 .CONECTOR MANGUERA COMBUST. 2	1	1	1	1	1	
14	93210–08287	..O-RING ..ANILLO O	1	1	1	1	1	
15	6Y1–24305–06	.FUEL PIPE JOINT COMP. 2 .CONECTOR MANGUERA COMBUST. 2	1	1	1	1	1	
16	93210–08287	..O-RING ..ANILLO O	1	1	1	1	1	

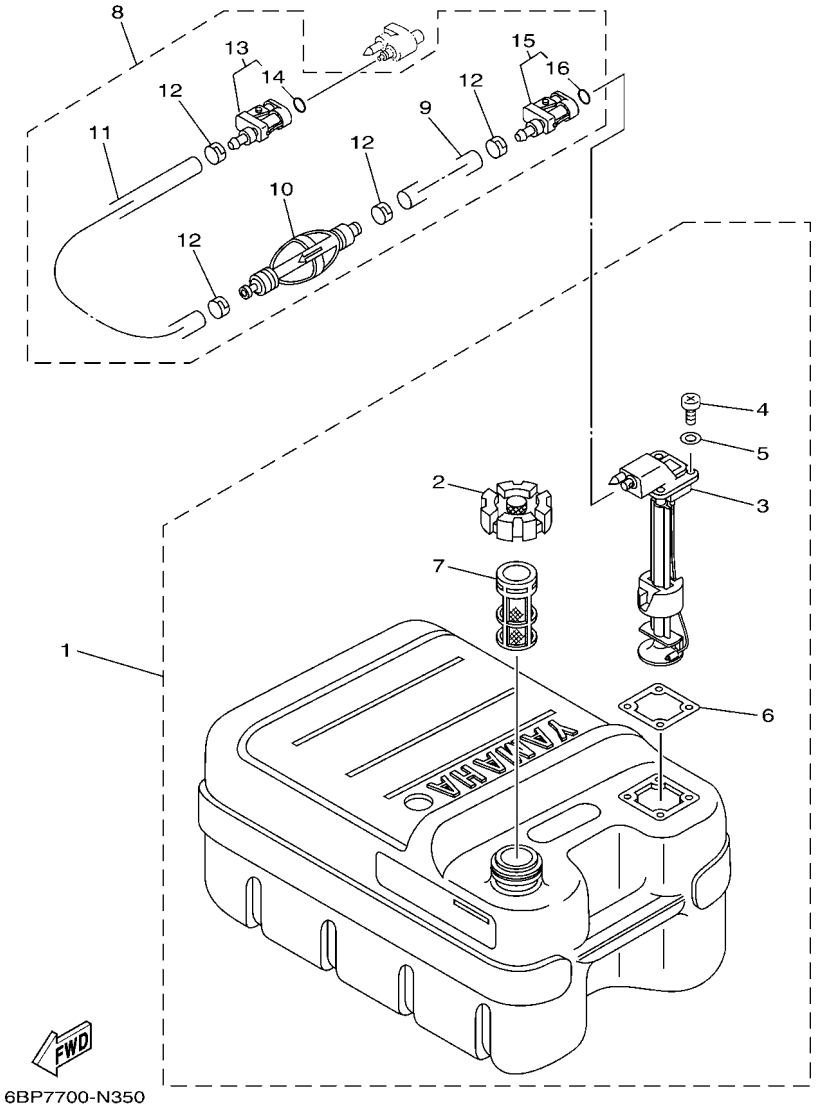

FIG. 27 FUEL TANK 2 — DEPOSITO DE COMBUSTIBLE 2

REF. NO.	PART NO. CODIGO Nº	DESCRIPTION DESCRIPCION	E40M	40MH	E40W	40WH	40W	REMARKS OBSERVACIONES
1	6YJ–24201–31	FUEL TANK ASSY (24L) TANQUE DEL COMBUSTIBLE (24L)				1		AP FOR TWN AP FOR TWN
2	6YJ–24610–01	.CAP ASSY .TAPA COMPLETA				1		
3	6Y1–24260–30	.FUEL METER ASSY .MEDIDOR DE COMBUSTIBLE COMPL.				1		WITH INDICATOR WITH INDICATOR
4	90157–05M19	.SCREW, PAN HEAD .TORNILLO CABEZA CONICA PLANA				4		
5	6Y1–24329–00	.SEAL .SELLO				4		
6	6Y1–24268–01	.GASKET, FUEL METER .EMPAQ MEDIDOR DE COMBUSTIBLE				1		
7	6YJ–24167–00	.STRAINER .COLADOR				1		
8	61J–24306–05	FUEL PIPE COMP. 1 TUBO COMBUST. COMPL 1				1		AP FOR TWN AP FOR TWN
9	90445–11M58	.HOSE (L2050) .MANGUERA (L2050)				1		
10	61J–24360–00	.PRIMER PUMP ASSY .SOPORTE BOMBA				1		
11	90445–11M57	.HOSE (L850) .TUBO (L850)				1		
12	650–24351–51	.BAND 1 .ABRAZADERA 1				4		
13	6G1–24305–05	.FUEL PIPE JOINT COMP. 2 .CONECTOR MANGUERA COMBUST. 2				1		
14	93210–08287	..O-RING ..ANILLO O				1		
15	6Y1–24305–06	.FUEL PIPE JOINT COMP. 2 .CONECTOR MANGUERA COMBUST. 2				1		
16	93210–08287	..O-RING ..ANILLO O				1		

FIG. 28 REMOTE CONTROL BOX — CONTROL REMOTO COMPLETO

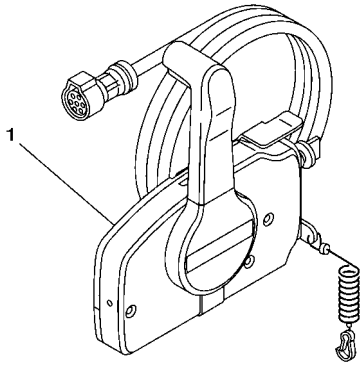

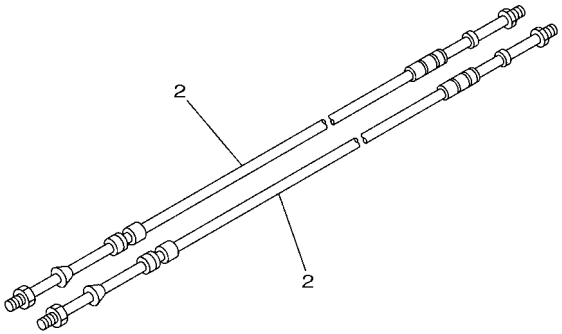

6DR3300-P300

REF. NO.	PART NO. CODIGO Nº	DESCRIPTION DESCRIPCION	E40M	40MH	E40W	40WH	40W	REMARKS OBSERVACIONES
1	703–48230–24	REMOTE CONTROL ASSY (7P) CONTROL REMOTO COMPL. (7P)					1	AP WITHOUT PT/T SW. AP WITHOUT PT/T SW.
2	701–48320–20	CABLE, REMOTE CONTROL L=13F CABLE CONTROL REMOTO L=13F					2	

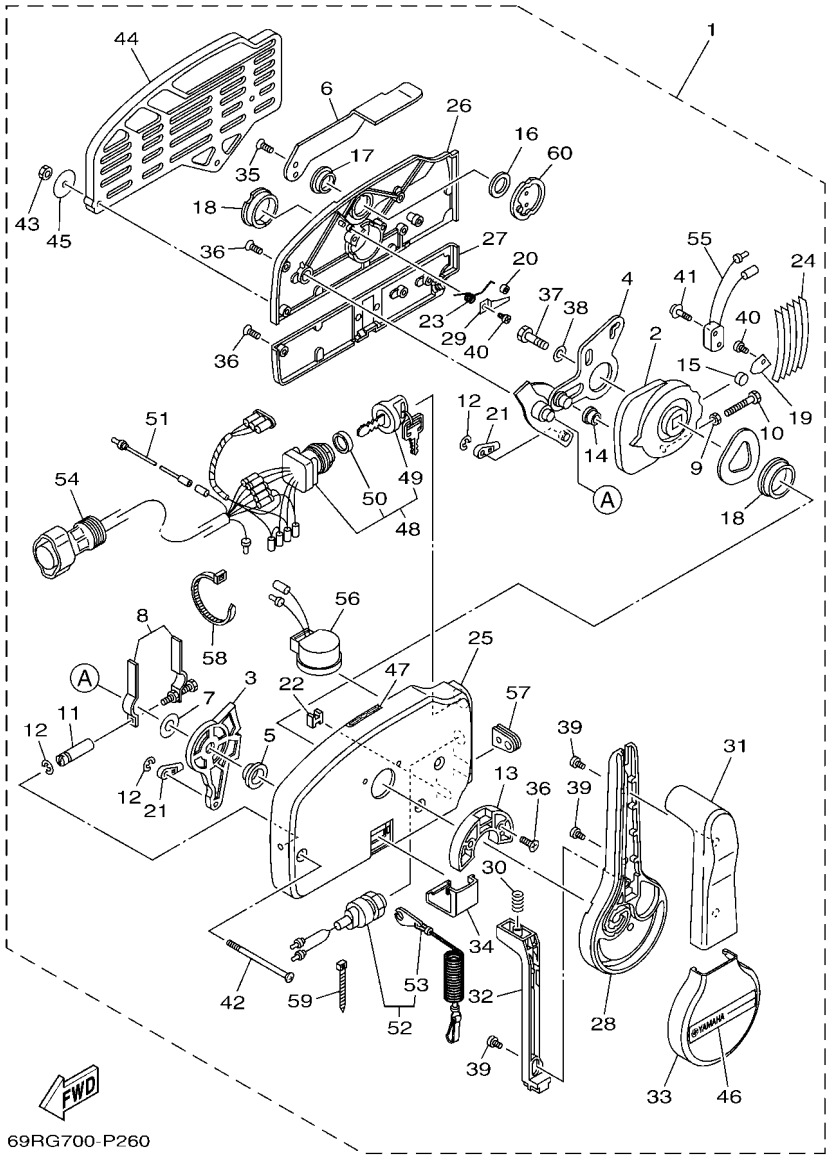

FIG. 29 REMOTE CONTROL ASSY — CONTROL REMOTO COMPL

REF. NO.	PART NO. CODIGO Nº	DESCRIPTION DESCRIPCION	E40M	40MH	E40W	40WH	40W	REMARKS OBSERVACIONES
1	703–48230–24	REMOTE CONTROL ASSY (7P) CONTROL REMOTO COMPL. (7P)					1	AP WITHOUT PT/T SW. AP WITHOUT PT/T SW.
2	703–48232–00	.GEAR .ENGRANAJE 1					1	
3	703–48271–00	.ARM, SHIFT .BRAZO CAMBIADOR					1	
4	703–48261–11	.ARM, THROTTLE .BRAZO ACELERADOR					1	
5	703–48235–00	.BUSHING .BUJE					1	
6	703–48152–10	.KNOB, FREE ACCEL. .PERILLA					1	
7	703–48268–00	.SPACER .ESPACIADOR 3					1	
8	703–48264–00	.FRICTION, THROTTLE .FRICCION DE ACELERADOR					1	
9	95380–05600	.NUT .TUERCA					1	
10	97380–05025	.BOLT .TORNILLO HEXAGONAL					1	
11	703–48265–10	.SHAFT, FRICTION .EJE FRICCION					1	
12	93430–06024	.CIRCLIP .SEGURO					3	
13	703–48245–00	.PLATE, LOCK .PLACA CERRADURA					1	
14	703–48252–00	.ROLLER, CAM .RODILLO LEVA					1	
15	701–48248–00	.ROLLER, FREE ACCEL. .RODILLO ACELERADOR LIBRE					1	
16	703–48198–00	.WASHER, WAVE .RONDANA ONDULADA 3					1	
17	703–48243–00	.BUSHING .BUJE 3					1	
18	703–48236–00	.BUSHING 1 .BUJE					2	
19	703–48189–00	.RETAINER .RETENEDOR					1	
20	703–48234–00	.ROLLER, DETENT .RODILLO					1	
21	703–48345–01	.CABLE END, REMOTE CONTROL 2 .TERMINAL CABLE DE CONTROL REMO					2	
22	703–48358–01	.ANCHOR, CABLE .ABRAZADERA CABLE					1	
23	703–48244–00	.SPRING, FREE ACCEL. .RESORTE ACELERADOR LIBRE					1	
24	703–48238–00	.SPRING, DETENT .RESORTE					5	
25	703–48211–10	.HOUSING,1 .CAJA					1	
26	703–48212–10	.BACK PLATE 1 .PLACA TRASERA 1					1	
27	703–48213–10	.BACK PLATE 2 .PLACA TRASERA 2					1	

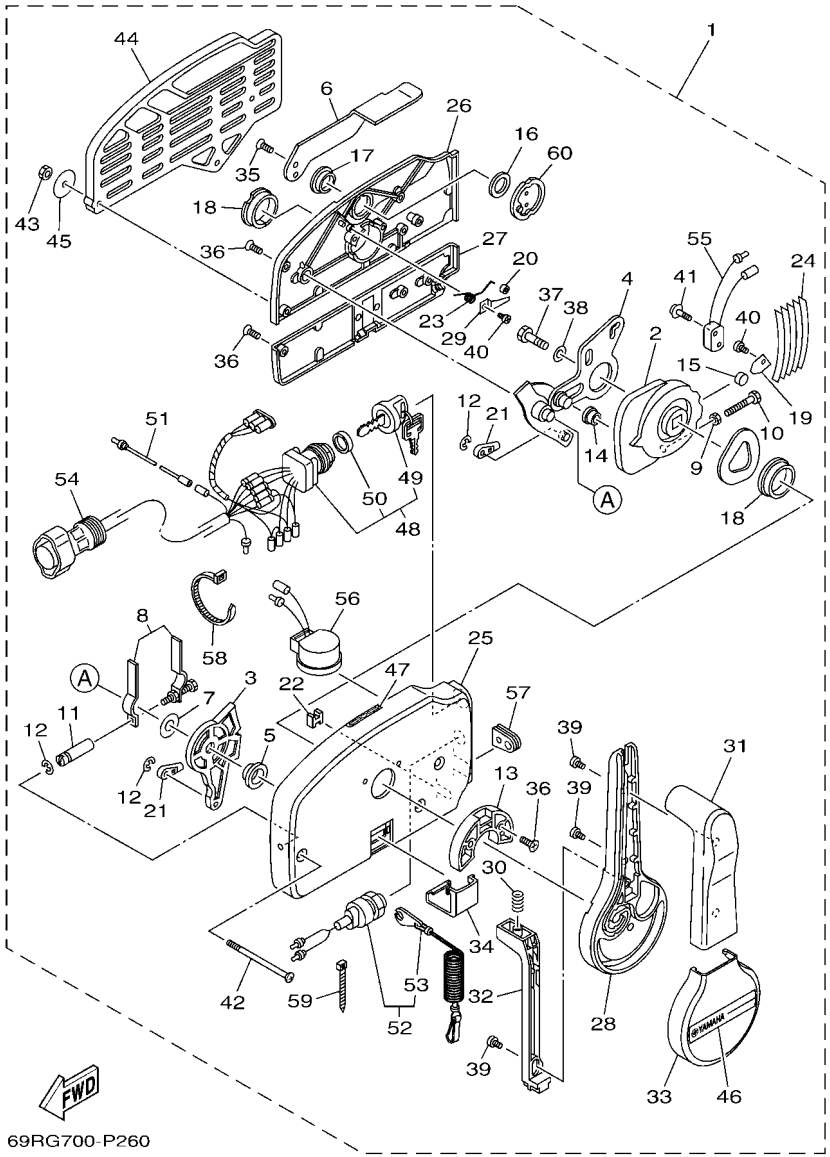

FIG. 29 REMOTE CONTROL ASSY — CONTROL REMOTO COMPL

REF. NO.	PART NO. CODIGO Nº	DESCRIPTION DESCRIPCION	E40M	40MH	E40W	40WH	40W	REMARKS OBSERVACIONES
28	703–48221–10	.LEVER, CONTROL .PALANCA CONTROL					1	
29	703–48246–00	.SPACER .ESPACIADOR					1	
30	703–48227–00	.SPRING, NEUTRAL LOCK .RESORTE DE SEGURO					1	
31	703–48222–30	.GRIP, CONTROL LEVER .MANGO DE PALANCA CONTROL					1	SINGLE SINGLE
32	703–48223–10	.LOCK, NEUTRAL .CERRADURA NEUTRO					1	
33	703–48225–10	.COVER .CUBIERTA					1	
34	703–48219–10	.COVER, LEAD .CUBIERTA					1	
35	703–48281–00	.SCREW .TORNILLO 1					2	
36	703–44189–20	.SCREW .TORNILLO					7	
37	97380–08030	.BOLT .TORNILLO HEXAGONAL					1	
38	92990–08600	.WASHER, PLATE .ARANDELA PLANA					1	
39	703–48128–10	.SCREW 2 .TORNILLO 2					3	
40	98580–04006	.SCREW, PAN HEAD .TORNILLO DE CABEZA CRUZADA					2	
41	703–48129–00	.SCREW 3 .TORNILLO 3					2	
42	703–44189–30	.SCREW .TORNILLO					3	
43	95380–06600	.NUT, HEXAGON .TUERCA					3	
44	703–48293–11	.SPACER, REMOTE CONTROL .ESPACIADOR					1	SINGLE SINGLE
45	701–48287–00	.WASHER .ARANDELA					3	
46	703–48215–11	.GRAPHIC .CALCOMANIA 1					1	
47	6X3–44191–00	.INDICATOR, SHIFT .INDICADOR DE CAMBIOS					1	
48	703–82510–34	.MAIN SWITCH ASSY .CONJUNTO DE LLAVE IGNICION					1	
49	703–82577–00	..CAP, KEY ..TAPA					1	
50	6K1–82532–00	..CAP ..TAPA					1	
51	703–82531–00	.WIRE, LEAD (L70) .CABLE CONDUCTOR (L70)					1	
52	688–82575–02	.ENGINE STOP SWITCH ASSY .INTERRUPTOR DE PARADA COMPL					1	
53	682–82556–00	..LANYARD, STOP SWITCH ..CORDON DE INTERRUPTOR PARADA					1	
54	688–82586–21	.EXTENSION, WIRE HARNESS (4.9M) .EXTENSION, ARNES DE CABLES (4.					1	(7P) (7P)

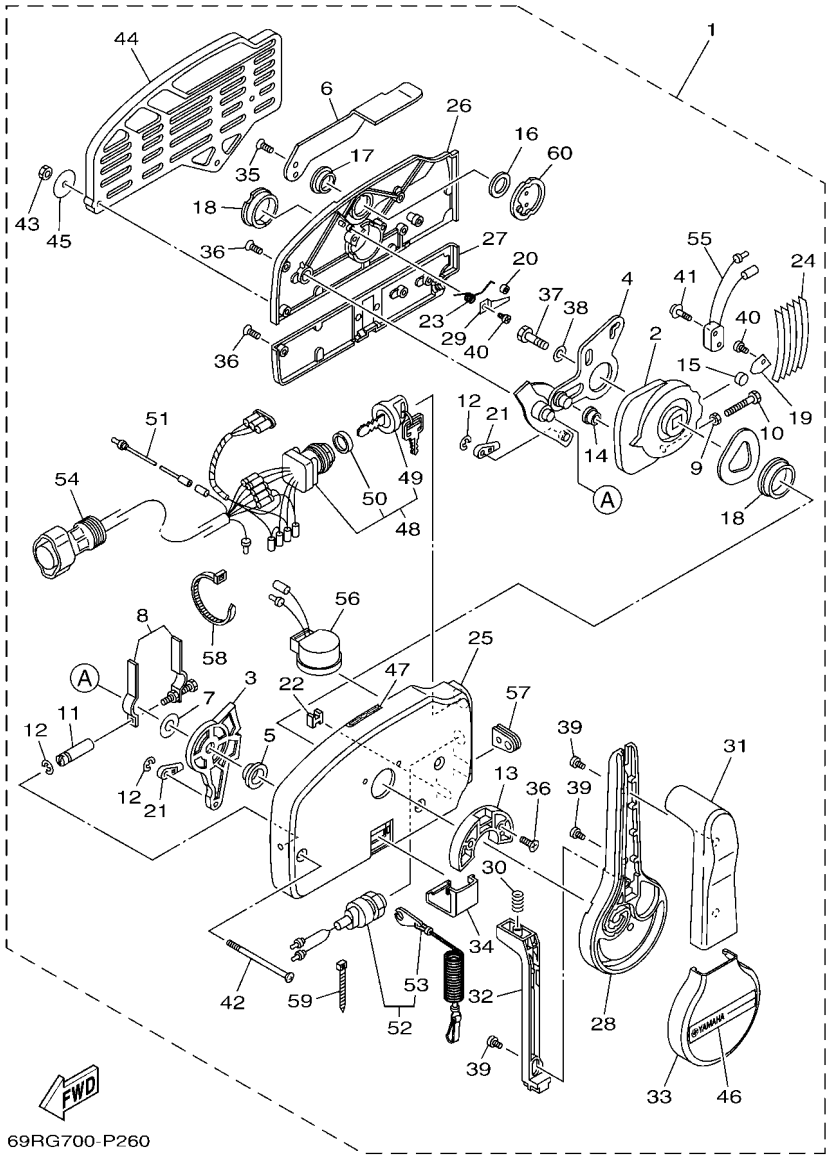

FIG. 29 REMOTE CONTROL ASSY — CONTROL REMOTO COMPL

REF. NO.	PART NO. CODIGO Nº	DESCRIPTION DESCRIPCION	E40M	40MH	E40W	40WH	40W	REMARKS OBSERVACIONES
55	703–82540–00	.NEUTRAL SWITCH ASSY .INTERRUPTOR NEUTRAL COMPL					1	
56	703–83383–11	.BUZZER .ZUMBADOR					1	
57	703–48284–00	.GROMMET .TAPON					1	
58	703–82591–00	.BAND .BANDA					1	
59	703–82592–00	.BAND .BANDA					1	
60	703–48153–00	.SHAFT, FREE ACCEL. .EJE					1	

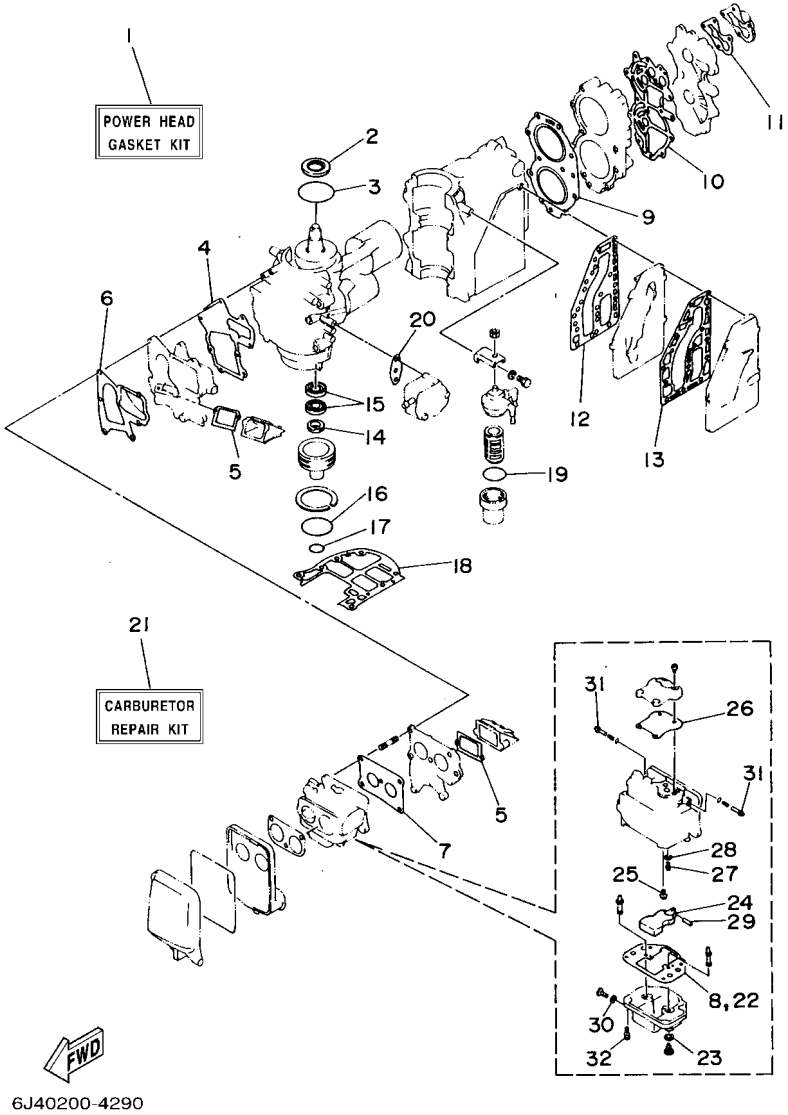

FIG. 30 REPAIR KIT 1 — ESTUCHE REPARATION 1

REF. NO.	PART NO. CODIGO Nº	DESCRIPTION DESCRIPCION	E40M	40MH	E40W	40WH	40W	REMARKS OBSERVACIONES
1	6F6–W0001–04	POWER HEAD GASKET KIT JUEGO DE EMPAQUE	1	1	1	1	1	
2	93102–35M18	.OIL SEAL .SELLO ACEITE	1	1	1	1	1	
3	93210–75M51	.O-RING .ANILLO O	1	1	1	1	1	
4	6F5–13646–A2	.GASKET, MANIFOLD 2 .EMPAQ. DE MULTIPLE 2	1	1	1	1	1	
5	6F5–13621–A1	.GASKET, VALVE SEAT .JUNTA, DE VALV.DE EMPAQUE	2	2	2	2	2	
6	6F5–13645–A1	.GASKET, MANIFOLD 1 .EMPAQUE	1	1	1	1	1	
7	6F5–14198–A1	.GASKET .EMPAQUE	1	1	1	1	1	
8	6F5–14384–01	.GASKET, FLOAT CHAMBER .EMPAQUE DE CAMARA DE BOIA	1	1	1	1	1	
9	6F5–11181–A2	.GASKET, CYLINDER HEAD 1 .JUNTA, DE CULATA 1	1	1	1	1	1	
10	6F6–11193–A1	.GASKET, HEAD COVER 1 .EMPAQUE	1	1	1	1	1	
11	6E9–12414–A1	.GASKET, COVER .EMPAQUE	1	1	1	1	1	
12	6F5–41112–A0	.GASKET, EXHAUST INNER COVER .EMPAQUE	1	1	1	1	1	
13	6F5–41114–A0	.GASKET, EXHAUST OUTER COVER .EMPAQUE	1	1	1	1	1	
14	93104–16M01	.OIL SEAL .SELLO ACEITE	1	1	1	1	1	
15	93101–30M33	.OIL SEAL .SELLO ACEITE	2	2	2	2	2	
16	93210–65M50	.O-RING .ANILLO O	1	1	1	1	1	
17	93210–22M02	.O-RING .ANILLO O	1	1	1	1	1	
18	6F5–45113–A2	.GASKET, UPPER CASING .EMPAQUE	1	1	1	1	1	
19	93210–32738	.O-RING .ANILLO O	1	1	1	1	1	
20	650–24431–A0	.GASKET, FUEL PUMP 1 .EMPAQUE BOMBA COMBUST 1	1	1	1	1	1	
21	6F6–W0093–01	CARBURETOR REPAIR KIT KIT REPARACION CARBURADOR	1	1	1	1	1	
22	6F5–14384–01	.GASKET, FLOAT CHAMBER .EMPAQUE DE CAMARA DE BOIA	1	1	1	1	1	
23	1J2–14398–00	.GASKET .EMPAQUE	2	2	2	2	2	
24	6F6–14385–00	.FLOAT .BOIA	1	1	1	1	1	
25	98980–04006	.SCREW, BIND .TORNILLO DE LIGAR	1	1	1	1	1	
26	6F5–14398–01	.GASKET .EMPAQUE	1	1	1	1	1	
27	6F5–14390–21	.NEEDLE VALVE ASSY .VALVULA DE AGUJA COMPLETA	1	1	1	1	1	

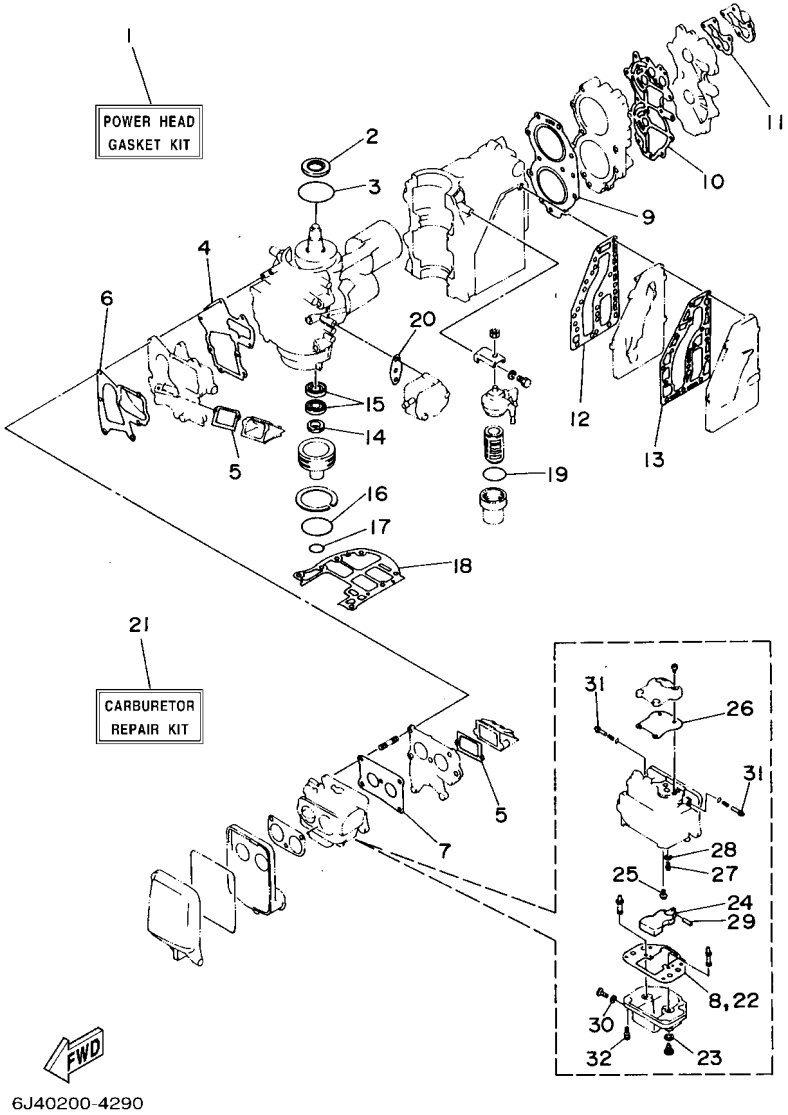

FIG. 30 REPAIR KIT 1 — ESTUCHE REPARATION 1

REF. NO.	PART NO. CODIGO Nº	DESCRIPTION DESCRIPCION	E40M	40MH	E40W	40WH	40W	REMARKS OBSERVACIONES
28	367–14195–00	.GASKET .ARANDELA DE VALVULA DE AGUJA	1	1	1	1	1	
29	6E5–14386–01	.PIN, FLOAT .PASADOR DE BOIA	1	1	1	1	1	
30	6F6–14398–00	.GASKET .EMPAQUE	2	2	2	2	2	
31	6F5–14323–01	.SCREW, AIR ADJUSTING .TORNILLO DE AJUSTE DE AIRE	2	2	2	2	2	
32	97603–05117	.SCREW, PAN HEAD WITH WASHER .TORNILLO	4	4	4	4	4	

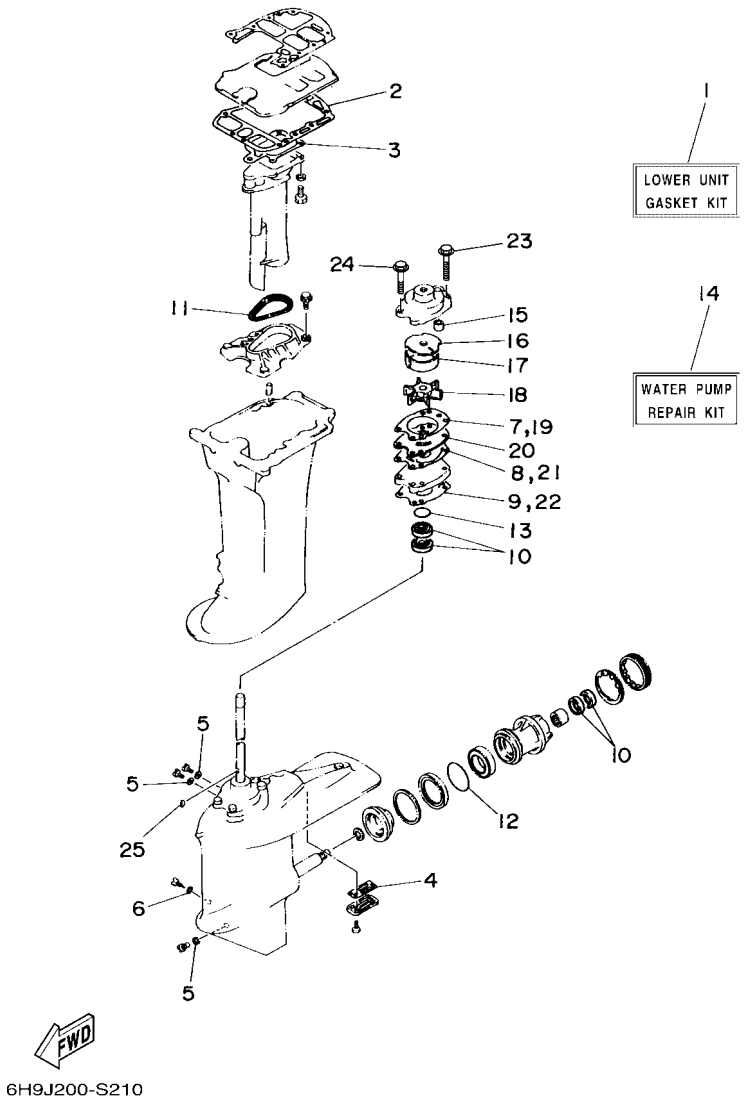

FIG. 31 REPAIR KIT 2 — ESTUCHE REPARATION 2

REF. NO.	PART NO. CODIGO Nº	DESCRIPTION DESCRIPCION	E40M	40MH	E40W	40WH	40W	REMARKS OBSERVACIONES
1	6H9–W0001–22	LOWER UNIT GASKET KIT JUEGO DE JUNTA UNIDAD INFERIOR		1		1	1	E40J E40J
2	676–45114–A1	.GASKET, UPPER CASING .EMPAQUE		1		1	1	
3	676–41133–A1	.GASKET, EXHAUST MANIFOLD 1 .EMPAQUE ESCAPE MULTIPLE		1		1	1	
4	679–45315–A1	.PACKING, LOWER CASING .EMPAQUE		1		1	1	
5	90430–08003	.GASKET .JUNTA		3		3	3	
6	90430–06M03	.GASKET .JUNTA		1		1	1	
7	676–44315–A1	.GASKET, WATER PUMP .EMPAQUE		1		1	1	
8	676–44324–A1	.GASKET, CARTRIDGE .EMPAQUE		1		1	1	
9	679–44316–A1	.GASKET, WATER PUMP .EMPAQUE		1		1	1	
10	93101–22M00	.OIL SEAL .SELLO ACEITE		4		4	4	
11	676–45127–00	.SEAL .SELLO DE GOMA		1		1	1	
12	93210–66M98	.O-RING .ANILLO O		1		1	1	
13	93210–41042	.O-RING .ANILLO O		1		1	1	
14	6J4–W0078–02	WATER PUMP REPAIR KIT ESTUCHE REPARACION BOMBA AGUA		1		1	1	E40J E40J
15	663–44366–01	.DAMPER, WATER SEAL 2 .GOMA DEL SELLO DE AGUA 2		1		1	1	
16	676–44321–40	.INNER PLATE, CARTRIDGE .PLACA INTERIOR CARTUCHO		1		1	1	
17	676–44322–40	.INSERT, CARTRIDGE .CARTUCHO		1		1	1	
18	6F5–44352–00	.IMPELLER .IMPULSOR		1		1	1	
19	676–44315–A1	.GASKET, WATER PUMP .EMPAQUE		1		1	1	
20	676–44323–40	.OUTER PLATE, CARTRIDGE .PLACA EXTERIOR DEL CARTUCHO		1		1	1	
21	676–44324–A1	.GASKET, CARTRIDGE .EMPAQUE		1		1	1	
22	679–44316–A1	.GASKET, WATER PUMP .EMPAQUE		1		1	1	
23	97E95–08555	.BOLT, HEXAGON W/W DEEP RECESS .TORNILLO HEXAGONAL CON RONDONA		2		2	2	
24	97E95–08545	.BOLT, HEXAGON W/W DEEP RECESS .TORNILLO HEXAGONAL CON RONDONA		2		2	2	
25	90280–04M00	.KEY, WOODRUFF .CUNA WOODRUFF		1		1	1	

FIG. 32 REPAIR KIT 3 — ESTUCHE REPARATION 3

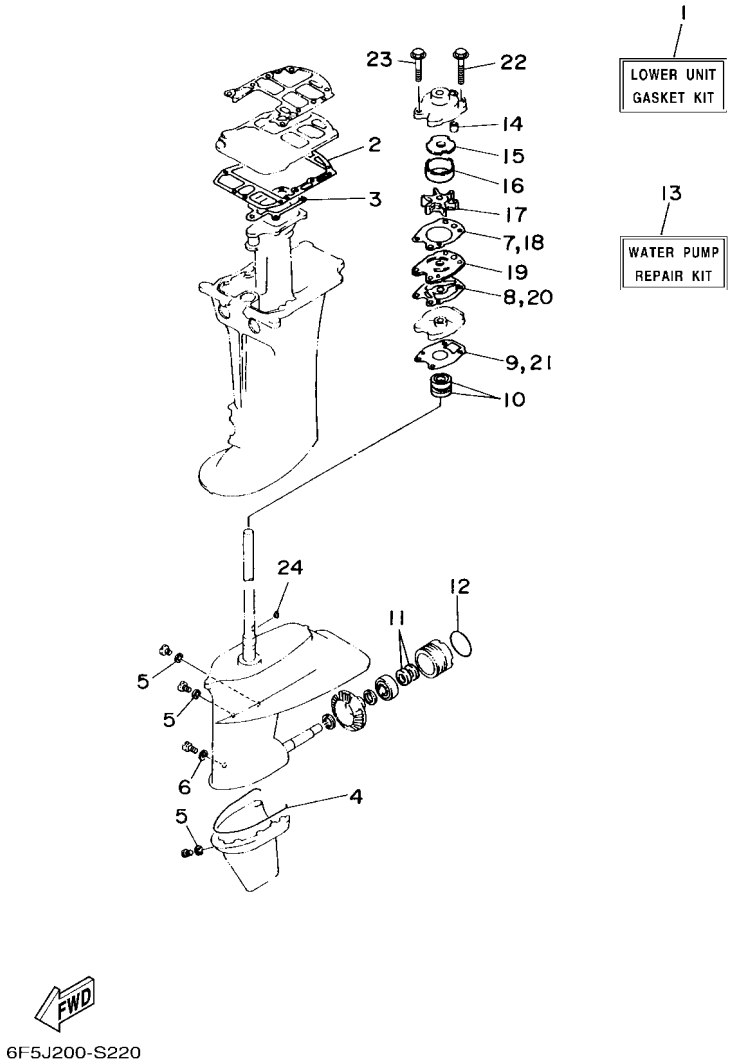

REF. NO.	PART NO. CODIGO Nº	DESCRIPTION DESCRIPCION	E40M	40MH	E40W	40WH	40W	REMARKS OBSERVACIONES
1	6F5–W0001–C0	LOWER UNIT GASKET KIT JUEGO DE JUNTA UNIDAD INFERIOR	1		1			E40G E40G
2	676–45114–A1	.GASKET, UPPER CASING .EMPAQUE	1		1			
3	676–41133–A1	.GASKET, EXHAUST MANIFOLD 1 .EMPAQUE ESCAPE MULTIPLE	1		1			
4	676–45314–00	.SEAL, LOWER CASING .SELLO DE FUNDA INFERIOR	1		1			
5	90430–08003	.GASKET .JUNTA	3		3			
6	90430–06M03	.GASKET .JUNTA	1		1			
7	676–44315–A1	.GASKET, WATER PUMP .EMPAQUE	1		1			
8	676–44324–A1	.GASKET, CARTRIDGE .EMPAQUE	1		1			
9	676–44316–A1	.GASKET, WATER PUMP .EMPAQUE	1		1			
10	93101–22M00	.OIL SEAL .SELLO ACEITE	2		2			
11	93101–20048	.OIL SEAL .SELLO ACEITE	2		2			
12	93210–57M00	.O-RING .ANILLO O	1		1			
13	6F6–W0078–02	WATER PUMP REPAIR KIT ESTUCHE REPARACION BOMBA AGUA	1		1			E40G E40G
14	663–44366–01	.DAMPER, WATER SEAL 2 .GOMA DEL SELLO DE AGUA 2	1		1			
15	676–44321–40	.INNER PLATE, CARTRIDGE .PLACA INTERIOR CARTUCHO	1		1			
16	676–44322–40	.INSERT, CARTRIDGE .CARTUCHO	1		1			
17	6F5–44352–00	.IMPELLER .IMPULSOR	1		1			
18	676–44315–A1	.GASKET, WATER PUMP .EMPAQUE	1		1			
19	676–44323–40	.OUTER PLATE, CARTRIDGE .PLACA EXTERIOR DEL CARTUCHO	1		1			
20	676–44324–A1	.GASKET, CARTRIDGE .EMPAQUE	1		1			
21	676–44316–A1	.GASKET, WATER PUMP .EMPAQUE	1		1			
22	97E95–08555	.BOLT, HEXAGON W/W DEEP RECESS .TORNILLO HEXAGONAL CON RONDONA	2		2			
23	97E95–08545	.BOLT, HEXAGON W/W DEEP RECESS .TORNILLO HEXAGONAL CON RONDONA	2		2			
24	90280–04M00	.KEY, WOODRUFF .CUNA WOODRUFF	1		1			

NUMERICAL INDEX
INDICE NUMERICO

PART NO. CODIGO Nº	REF. NO.
6F6–11111–00–1S	3 – 21
6F5–11119–00	3 – 19
6F5–11181–A2	3 – 22
	30 – 9
6F6–11191–00–1S	3 – 24
6F6–11193–A1	3 – 25
	30 – 10
676–11325–00	1 – 2
	3 – 17
650–11370–01	3 – 4
	5 – 5
6F6–11370–01	5 – 4
6F6–11400–02	4 – 1
6F5–11412–12	4 – 2
6F5–11422–12	4 – 3
6F5–11432–12	4 – 4
6F5–11442–12	4 – 5
6F5–11515–00	4 – 9
6F5–11610–00	4 – 16
6F5–11610–10	4 – 16
6F5–11610–20	4 – 16
6F6–11631–00–95	4 – 15
6F5–11633–00	4 – 17
663–11634–00	4 – 18
6F6–11635–00	4 – 15
6F6–11636–00	4 – 15
6F5–11651–00	4 – 11
6F5–11681–00	4 – 12
6F5–12411–03	1 – 3
	3 – 32
6E5–12412–00	3 – 33
6E9–12413–00–1S	3 – 34
6E9–12414–A1	1 – 4
	3 – 35
	30 – 11
663–12416–00	3 – 27
6F6–13610–00	5 – 1
6F5–13621–A1	5 – 8
	5 – 17
	30 – 5
6F6–13641–00–1S	5 – 3
6F6–13643–01–1S	5 – 15
6F5–13645–A1	5 – 18
	30 – 6
6F5–13646–A2	5 – 6
	30 – 4
367–14195–00	6 – 11
	30 – 28

PART NO. CODIGO Nº	REF. NO.
6F5–14198–A1	5 – 22
	30 – 7
6J4–14301–06	6 – 1
6F6–14301–07	6 – 1
650–14321–01	6 – 18
6F5–14323–01	6 – 23
	30 – 31
6A0–14325–00	7 – 23
647–14334–00	6 – 19
6F5–14334–01	6 – 24
6F6–14341–00	6 – 4
647–14342–45	6 – 12
677–14343–75	6 – 6
6F6–14381–00	6 – 3
6F6–14383–00	6 – 13
6F5–14383–10	6 – 21
6F5–14384–01	6 – 2
	30 – 8
	30 – 22
6F6–14385–00	6 – 7
	30 – 24
6E5–14386–01	6 – 9
	30 – 29
6F5–14390–21	6 – 10
	30 – 27
647–14395–61	5 – 21
5Y1–14397–01	6 – 25
1J2–14398–00	6 – 5
	30 – 23
6F6–14398–00	6 – 22
	30 – 30
6F5–14398–01	6 – 14
	30 – 26
6F5–14417–00	5 – 25
6F5–14418–00	5 – 26
6F5–14476–00	5 – 29
6F5–14483–00	5 – 35
624–14485–00	3 – 3
	5 – 19
	5 – 30
6F5–14497–00	16 – 1
6F6–15100–02	3 – 2
6F5–15396–01–CA	3 – 8
6F5–15711–02	8 – 2
6F5–15713–00	8 – 5
6F5–15714–03	8 – 3
6F5–15715–00	8 – 6
6F5–15716–01	8 – 8

PART NO. CODIGO Nº	REF. NO.
6F5–15723–01	8 – 22
6F5–15726–01	8 – 11
6F5–15734–01	8 – 7
6F5–15739–00	8 – 20
6F5–15741–01	8 – 4
6F5–15746–00	8 – 36
6F5–15747–00	8 – 35
656–15748–00	8 – 40
6F5–15752–00	8 – 16
6F5–15753–01	8 – 17
6F5–15754–00	8 – 9
689–15755–02	8 – 14
6A0–15758–01–8D	8 – 27
6A0–15761–00	2 – 3
6A0–15762–01	8 – 29
6F5–15764–00	8 – 15
6F5–15768–01	8 – 19
6F5–15770–00	8 – 37
6F5–15771–00–94	8 – 31
6F5–15772–00–94	8 – 33
6F5–15773–00	8 – 38
6F5–15774–00	8 – 39
6F5–15779–02	8 – 21
6A0–15789–01	8 – 30
6F5–15791–01	8 – 18
6YJ–24167–00	26 – 7
	27 – 7
6YJ–24201–21	26 – 1
6YJ–24201–31	27 – 1
6YJ–24260–11	26 – 3
6Y1–24260–30	27 – 3
6Y1–24268–01	26 – 6
	27 – 6
6G1–24304–11	7 – 1
6G1–24305–05	26 – 13
	27 – 13
6Y1–24305–06	26 – 15
	27 – 15
61J–24306–05	26 – 8
	27 – 8
6Y1–24329–00	26 – 5
	27 – 5
650–24351–51	26 – 12
	27 – 12
61J–24360–00	26 – 10
	27 – 10
692–24410–01	7 – 14
663–24411–00	7 – 19

PART NO. CODIGO Nº	REF. NO.
692–24411–00	7 – 16
6A0–24412–02	7 – 24
6A0–24413–00	7 – 15
6A0–24421–01	7 – 22
650–24431–A0	7 – 25
	30 – 20
648–24434–01	7 – 17
648–24435–03	7 – 20
61N–24521–00	7 – 7
61N–24560–00	7 – 5
61N–24563–00	1 – 6
	7 – 6
648–24566–02	7 – 9
6YJ–24610–01	26 – 2
	27 – 2
6F5–26311–00	15 – 19
676–26326–01	14 – 13
676–26391–00	15 – 20
676–26392–00	15 – 21
6F5–41111–01–1S	3 – 39
6F5–41112–A0	3 – 38
	30 – 12
6F5–41113–A0–1S	3 – 37
6F5–41114–A0	3 – 40
	30 – 13
6F5–41116–00–CA	20 – 5
	21 – 5
676–41131–01–CA	20 – 11
	21 – 11
676–41133–A1	20 – 12
	21 – 12
	31 – 3
	32 – 3
6F5–41137–03–CA	20 – 7
	21 – 7
6F5–41141–00	20 – 8
	21 – 8
6F5–41211–00	16 – 7
6E9–41237–00	16 – 8
6F5–41237–00	17 – 4
6F5–41252–00	5 – 36
6F6–41256–00	5 – 39
661–41262–02	5 – 40
	8 – 45
682–41271–01	5 – 37
689–41273–00	5 – 38
6F5–41283–00	16 – 3
6F5–41638–00	16 – 2

PART NO. CODIGO Nº	REF. NO.
6F5–41662–00	16 – 12
676–42111–03–8D	15 – 2
676–42115–00	15 – 10
664–42119–00	15 – 3
6F5–42125–00	15 – 31
6F5–42126–00	15 – 30
6F6–42137–20	15 – 5
676–42151–00–94	15 – 15
650–42152–00–94	15 – 13
676–42159–00	15 – 11
6G1–42177–01	15 – 4
676–42511–03–8D	18 – 24
676–42521–00	18 – 28
648–42528–01	18 – 14
676–42591–01	18 – 66
6J4–42610–12	2 – 1
6F6–42610–22	2 – 1
6F6–42612–00	2 – 11
6F5–42613–A0–8D	2 – 8
6F6–42613–A0–8D	2 – 8
6F5–42615–01	2 – 10
6F5–4261A–02	2 – 2
6F6–4261A–02	2 – 2
6E9–42651–01	2 – 4
6F5–42652–01	2 – 6
61N–42675–41	2 – 14
61N–42676–41	2 – 15
63D–42678–41	2 – 16
	2 – 17
61R–42681–01	2 – 18
	2 – 19
6F6–42711–03–8D	14 – 1
6F5–42715–00	16 – 19
6F5–42716–01	14 – 10
6F5–42724–01	14 – 11
676–42724–41	14 – 13
6F5–42724–41	14 – 11
6F5–42725–51	17 – 10
676–42726–00	14 – 21
6F5–42727–01	14 – 12
6F5–42738–01–94	14 – 8
6F5–42741–11	14 – 23
6EE–42794–40	14 – 26
6EE–42794–50	14 – 27
6F5–42815–01–8D	14 – 3
6F5–42816–00	14 – 5
676–43111–04–8D	18 – 1
676–43112–05–8D	18 – 7

PART NO. CODIGO Nº	REF. NO.
6J8–43113–01	18 – 21
6F5–43114–00	18 – 2
6F5–43116–00	18 – 3
663–43118–01–8D	18 – 4
6J8–43131–01	18 – 18
676–43132–00	19 – 2
6G5–43145–01	18 – 23
676–43160–02	19 – 26
676–43191–00	19 – 8
676–43311–11–8D	18 – 12
663–43318–00	19 – 17
676–43373–01	18 – 16
676–43613–01	19 – 20
676–43614–00	19 – 18
676–43615–00	19 – 19
676–43616–00	19 – 16
6F5–43627–80	19 – 5
6F5–43628–81	19 – 6
6F5–43630–80	19 – 12
676–43631–00	19 – 13
676–43643–00	19 – 28
6F5–44111–01	16 – 9
6F5–44111–51	17 – 1
6F5–44121–00	16 – 14
6F5–44125–00	16 – 10
676–44143–00	16 – 23
648–44146–00	16 – 24
650–44147–00	22 – 61
	24 – 61
676–44150–00	24 – 58
679–44150–00	22 – 58
676–44150–10	24 – 58
679–44150–10	22 – 58
6A0–44150–20	22 – 58
679–44152–00	22 – 59
6F5–44167–00	16 – 20
6F5–44173–00	16 – 18
703–44189–20	29 – 36
703–44189–30	29 – 42
6X3–44191–00	2 – 20
	29 – 47
676–44311–00	22 – 18
	24 – 23
676–44315–A1	22 – 21
	24 – 26
	31 – 7
	31 – 19
	32 – 7

NUMERICAL INDEX
INDICE NUMERICO

PART NO. CODIGO Nº	REF. NO.
676–44315–A1	32 – 18
676–44316–A1	24 – 29
	32 – 9
	32 – 21
679–44316–A1	22 – 25
	31 – 9
	31 – 22
676–44321–40	22 – 20
	24 – 24
	31 – 16
	32 – 15
676–44322–40	22 – 19
	24 – 25
	31 – 17
	32 – 16
676–44323–40	22 – 26
	24 – 30
	31 – 20
	32 – 19
676–44324–A1	22 – 27
	24 – 31
	31 – 8
	31 – 21
	32 – 8
	32 – 20
679–44341–00	22 – 28
676–44341–01	24 – 32
6F5–44352–00	22 – 23
	24 – 27
	31 – 18
	32 – 17
676–44361–00	23 – 2
	25 – 2
676–44361–10	23 – 2
	25 – 2
6A0–44361–20	23 – 2
6H9–44362–00	23 – 7
663–44366–01	22 – 22
	24 – 36
	31 – 15
	32 – 14
663–44367–01	23 – 1
	25 – 1
6E5–44391–00	14 – 2
676–44511–00	18 – 55
676–44512–00	18 – 56
679–44514–00	18 – 46
676–44518–00	18 – 52

PART NO. CODIGO Nº	REF. NO.
676–44521–00	18 – 59
676–44522–01	18 – 60
676–44533–01	18 – 51
676–44551–01–8D	18 – 34
676–44552–01–8D	18 – 35
676–44553–01–8D	18 – 36
62Y–44555–00	18 – 37
676–44575–01	18 – 45
676–45111–03–8D	20 – 1
	21 – 1
6H9–45111–11–8D	20 – 1
676–45111–15–8D	21 – 1
6F5–45113–A2	20 – 2
	21 – 2
	30 – 18
676–45114–A1	20 – 9
	21 – 9
	31 – 2
	32 – 2
676–45127–00	20 – 13
	21 – 13
	31 – 11
676–45151–00–8D	20 – 22
	21 – 15
676–45151–10–8D	20 – 22
	21 – 15
6A0–45211–20–8D	20 – 17
6F5–45214–00	25 – 5
688–45214–02	23 – 10
676–45215–01	24 – 15
688–45215–02	23 – 11
676–45251–00	1 – 1
	3 – 15
6F5–45251–02	1 – 11
	25 – 10
6E0–45251–12	1 – 12
	25 – 13
6F5–45252–00	25 – 6
6F5–45279–01	24 – 16
6F6–45300–05–8D	24 – 1
6J4–45300–05–8D	22 – 1
6F6–45300–15–8D	24 – 1
6H9–45300–15–8D	22 – 1
6J4–45300–15–8D	22 – 1
6J4–45300–25–8D	22 – 1
6F5–45311–02–8D	24 – 2
6F5–45312–01–8D	24 – 3
676–45314–00	24 – 20

PART NO. CODIGO Nº	REF. NO.
676–45314–00	32 – 4
679–45315–A1	22 – 5
	31 – 4
6A0–45318–00	20 – 15
650–45321–00	24 – 59
679–45321–02	22 – 4
679–45331–00	22 – 48
688–45341–10	22 – 15
	24 – 19
676–45361–01–CA	24 – 54
679–45371–00	1 – 10
	23 – 14
663–45375–00	23 – 9
6H9–45375–00	23 – 9
663–45376–00	23 – 8
6H9–45376–00	23 – 8
697–45384–02	22 – 56
676–45501–00	24 – 37
679–45501–00	22 – 34
676–45501–10	24 – 37
679–45501–10	22 – 34
6A0–45501–20	22 – 34
676–45533–00	24 – 5
676–45536–00	24 – 7
679–45536–00	22 – 8
6H9–45551–00	22 – 35
6F5–45551–01	24 – 38
663–45552–00	22 – 36
679–45560–00	22 – 38
6F5–45560–01	24 – 41
676–45567–00	24 – 42
663–45567–01	22 – 11
663–45567–10	22 – 11
676–45567–10	24 – 42
663–45567–20	22 – 11
676–45567–20	24 – 42
663–45567–30	22 – 11
676–45567–30	24 – 42
663–45567–40	22 – 11
676–45567–40	24 – 42
663–45567–50	22 – 11
676–45567–50	24 – 42
663–45567–60	22 – 11
6F5–45570–00	24 – 52
679–45571–00	22 – 47
663–45576–00	22 – 51
676–45577–00	24 – 53
663–45577–01	22 – 50

PART NO. CODIGO Nº	REF. NO.
663–45577–10	22 – 50
676–45577–10	24 – 53
663–45577–20	22 – 50
676–45577–20	24 – 53
663–45577–30	22 – 50
676–45577–30	24 – 53
663–45577–40	22 – 50
676–45577–40	24 – 53
663–45577–50	22 – 50
676–45577–50	24 – 53
663–45577–60	22 – 50
676–45577–60	24 – 53
676–45577–70	24 – 53
676–45587–00	24 – 39
663–45587–01	22 – 9
663–45587–10	22 – 9
676–45587–10	24 – 39
663–45587–20	22 – 9
676–45587–20	24 – 39
663–45587–30	22 – 9
676–45587–30	24 – 39
663–45587–40	22 – 9
663–45587–50	22 – 9
663–45587–60	22 – 9
679–45611–01	22 – 39
6F6–45611–01	24 – 44
6F6–45614–00	25 – 17
676–45616–A0	25 – 16
663–45631–01	22 – 42
	24 – 47
663–45633–00	22 – 44
	24 – 49
663–45634–00	22 – 41
	24 – 46
676–45635–00	22 – 40
	24 – 45
663–45930–00	23 – 21
663–45941–01	23 – 21
676–45941–62	25 – 20
69W–45943–00	23 – 21
676–45943–62	25 – 20
69W–45945–00	23 – 21
676–45945–62	25 – 20
69W–45947–00	23 – 21
676–45947–62	25 – 20
663–45949–01	23 – 21
676–45949–62	25 – 20
69W–45952–00	23 – 21

PART NO. CODIGO Nº	REF. NO.
663–45952–02	23 – 21
676–45952–62	25 – 20
663–45954–01	23 – 21
663–45956–01	23 – 21
676–45956–61	25 – 20
663–45958–01	23 – 21
663–45970–60	23 – 21
663–45972–60	23 – 21
663–45974–60	23 – 21
663–45976–00	23 – 21
663–45978–00	23 – 21
663–45987–02	23 – 16
66T–45997–00	23 – 17
703–48128–10	29 – 39
703–48129–00	29 – 41
703–48152–10	29 – 6
703–48153–00	29 – 60
703–48189–00	29 – 19
703–48198–00	29 – 16
703–48211–10	29 – 25
703–48212–10	29 – 26
703–48213–10	29 – 27
703–48215–11	29 – 46
703–48219–10	29 – 34
703–48221–10	29 – 28
703–48222–30	29 – 31
703–48223–10	29 – 32
703–48225–10	29 – 33
703–48227–00	29 – 30
703–48230–24	28 – 1
	29 – 1
703–48232–00	29 – 2
703–48234–00	29 – 20
703–48235–00	29 – 5
703–48236–00	29 – 18
703–48238–00	29 – 24
703–48243–00	29 – 17
703–48244–00	29 – 23
703–48245–00	29 – 13
703–48246–00	29 – 29
701–48248–00	29 – 15
703–48252–00	29 – 14
703–48261–11	29 – 4
703–48264–00	29 – 8
703–48265–10	29 – 11
703–48268–00	29 – 7
703–48271–00	29 – 3
703–48281–00	29 – 35

PART NO. CODIGO Nº	REF. NO.
703–48284–00	29 – 57
701–48287–00	29 – 45
703–48293–11	29 – 44
701–48320–20	28 – 2
6F5–48345–00	17 – 3
703–48345–01	29 – 21
703–48358–01	29 – 22
676–48511–02	17 – 5
6F5–48538–00	17 – 2
6F5–81328–00	9 – 9
6J4–81800–01	13 – 3
689–81807–12	13 – 5
689–81809–11	13 – 9
689–81810–11	13 – 11
689–81811–11	13 – 13
689–81812–11	13 – 14
689–81813–10	13 – 15
6J4–81820–02	13 – 24
689–81820–11	13 – 16
689–81826–10	13 – 17
6F5–81830–11	13 – 6
689–81831–00	13 – 7
689–81840–11	13 – 12
6F5–81842–41	13 – 1
689–81847–11	13 – 8
689–81850–12	13 – 10
689–81857–11	13 – 4
6G1–81941–10	13 – 20
6F5–81945–00	13 – 22
6F5–81948–A0	10 – 21
6G1–81952–01	13 – 21
6F5–81970–62	11 – 9
	12 – 9
6EE–81994–40	8 – 46
6EE–81994–50	8 – 47
6EE–81995–40	8 – 48
6EE–81995–50	8 – 49
6F5–82105–01	11 – 7
	12 – 7
6F5–82117–01	11 – 6
	12 – 6
61A–82119–00	11 – 22
	12 – 27
703–82119–01	9 – 20
663–82151–01	11 – 15
	12 – 12
61N–82317–01	10 – 2
6A0–82317–01	12 – 19

NUMERICAL INDEX
INDICE NUMERICO

PART NO. CODIGO Nº	REF. NO.
62E–8231X–00	10 – 9
62E–82371–11	10 – 8
6F6–82509–00	11 – 16
6F5–82510–11	11 – 11
703–82510–34	29 – 48
703–82531–00	29 – 51
6K1–82532–00	29 – 50
703–82532–00	11 – 13
703–82540–00	29 – 55
6F5–82540–01	11 – 21
682–82556–00	14 – 19
	29 – 53
688–82560–10	10 – 14
688–82575–02	29 – 52
6E9–82575–02	14 – 18
703–82577–00	29 – 49
676–82577–01	11 – 12
689–8257Y–00	14 – 20
6F5–82580–00	10 – 15
688–82586–21	29 – 54
6F5–82588–00	10 – 20
6J4–82590–12	12 – 11
6F5–82590–31	11 – 14
703–82591–00	29 – 58
703–82592–00	29 – 59
703–83383–11	29 – 56
65L–83557–00	11 – 23
	12 – 28
6G1–83557–00	11 – 18
	12 – 24
6G5–83557–00	11 – 20
	12 – 26
6F5–85515–10	9 – 8
6F5–85520–11	9 – 4
6F6–85530–01	10 – 7
6F5–85533–10	9 – 5
6F6–85540–03	10 – 5
6F5–85542–10	10 – 1
6F6–85550–B1	9 – 1
6F5–85550–G1	9 – 1
6F5–85560–B1	9 – 2
6F5–85580–10	9 – 6
6F5–85580–20	9 – 7
6F5–85597–H0	9 – 14
6F5–85597–J0	9 – 13
6J4–86111–00	12 – 13
6J4–86112–00	12 – 15
6J4–86116–00	12 – 14

PART NO. CODIGO Nº	REF. NO.
682–86117–00	12 – 18
6F6–W0001–04	30 – 1
6H9–W0001–22	31 – 1
6F5–W0001–C0	32 – 1
692–W0004–00	5 – 2
6F6–W0078–02	1 – 13
	32 – 13
6J4–W0078–02	1 – 13
	31 – 14
6F6–W0084–04–8D	15 – 1
6F6–W0090–07–1S	3 – 1
6F6–W0093–01	30 – 21
6F5–W1571–05	8 – 1
656–W2810–03	7 – 30
6J4–W4531–01–8D	22 – 2
6H9–W4531–12–8D	22 – 2
90101–08001	3 – 20
90101–08M02	18 – 47
90101–10047	18 – 62
90101–12M01	18 – 40
90101–12M37	15 – 24
90105–06M01	20 – 6
	21 – 6
	24 – 22
90105–06M21	25 – 11
90105–08117	18 – 8
90105–08M10	8 – 23
90105–08M35	10 – 22
90105–08M50	13 – 18
90105–08M51	13 – 25
90109–06M12	18 – 6
90109–06M86	10 – 6
90116–06M17	5 – 9
90116–08M12	20 – 19
90119–06121	2 – 12
90119–06273	14 – 6
90119–06290	10 – 4
90119–06291	14 – 16
90119–06M11	14 – 25
90119–06MA3	3 – 30
	3 – 41
90119–06MA4	3 – 36
90119–08M10	8 – 24
90119–08MA5	3 – 23
90119–10005	3 – 6
90119–10028	3 – 7
90152–05011	15 – 6
90152–05M09	23 – 12

PART NO. CODIGO Nº	REF. NO.
90152–06M01	3 – 18
90152–06M06	25 – 7
90157–05M19	26 – 4
	27 – 4
90157–06015	22 – 17
	24 – 14
90159–04035	9 – 12
90159–04063	9 – 11
90159–05040	9 – 10
90159–06M01	5 – 27
90170–07021	16 – 25
90170–12138	22 – 37
90170–20137	9 – 18
90171–16011	23 – 19
90185–05002	23 – 13
90185–08057	18 – 50
90185–12058	15 – 29
90185–22043	18 – 22
90201–08M08	18 – 48
90201–09M00	18 – 49
90201–10M02	15 – 7
90201–12426	18 – 64
90201–12537	15 – 27
90201–12M16	18 – 41
90201–13M11	18 – 43
90201–20417	4 – 20
90201–20MA8	24 – 51
90201–21M18	9 – 19
90201–22429	22 – 45
90201–22M03	18 – 20
90201–44M01	18 – 30
90202–06M00	19 – 10
90202–12060	23 – 3
	25 – 3
90202–12092	15 – 26
90202–12M01	19 – 3
90202–21100	18 – 42
90206–12052	14 – 7
90206–12054	15 – 28
90206–12M00	19 – 4
90206–16M03	25 – 19
90209–27012	4 – 13
90209–52M00	18 – 29
90214–48M03	22 – 55
90240–05M09	16 – 15
90243–04007	18 – 5
90249–07M01	19 – 21
90249–07M02	19 – 22

PART NO. CODIGO Nº	REF. NO.
90249–12M13	19 – 7
90249–12M27	19 – 1
90250–06023	22 – 43
	24 – 48
90260–04002	19 – 29
90266–04M01	2 – 7
90266–04M04	2 – 5
90280–04M00	22 – 24
	24 – 28
	31 – 25
	32 – 24
90280–05015	9 – 17
90282–04010	22 – 57
90338–22007	22 – 3
90340–08002	22 – 14
	24 – 12
90340–14036	3 – 29
90385–12M04	8 – 25
90386–08032	15 – 9
90386–08M00	15 – 18
90386–12089	15 – 23
90386–12M37	14 – 4
90386–22M15	18 – 19
90386–44M03	18 – 32
90386–52M02	18 – 31
90387–06119	10 – 3
	12 – 22
90387–06M29	8 – 44
	16 – 4
90387–06M41	14 – 15
90387–07M04	19 – 25
90387–08M02	18 – 9
90387–08M05	8 – 26
90387–08M12	13 – 2
90389–22M01	23 – 18
90430–06M03	1 – 9
	22 – 16
	24 – 13
	31 – 6
	32 – 6
90430–08003	1 – 8
	22 – 13
	24 – 11
	24 – 18
	31 – 5
	32 – 5
90430–12072	23 – 4
	25 – 4

PART NO. CODIGO Nº	REF. NO.
90430–14115	3 – 31
90445–07240	5 – 31
	5 – 31
90445–07254	5 – 13
90445–07M24	5 – 32
90445–09090	7 – 12
	7 – 27
90445–09226	7 – 3
90445–09M37	3 – 42
90445–11M57	26 – 11
	27 – 11
90445–11M58	26 – 9
	27 – 9
90446–10M01	11 – 4
	12 – 4
90446–10M02	11 – 1
	11 – 8
	12 – 1
	12 – 8
90447–13011	14 – 22
90462–08096	10 – 16
90464–06006	11 – 19
	12 – 25
90464–07008	7 – 29
90464–07M06	11 – 2
	12 – 2
90464–16003	11 – 17
90465–08M07	10 – 12
90465–11M10	10 – 10
	11 – 25
	12 – 30
90465–11M52	18 – 61
90465–13M18	10 – 17
90467–06016	5 – 14
	5 – 20
	5 – 33
	5 – 34
90467–08004	3 – 43
	7 – 4
	7 – 13
	7 – 28
90468–07179	11 – 24
	12 – 23
	12 – 29
90480–09M21	14 – 14
90480–10155	12 – 16
90480–17165	12 – 31
90480–17M08	11 – 26

PART NO. CODIGO Nº	REF. NO.
90480–17M08	12 – 32
90480–18065	3 – 26
90480–25161	10 – 11
90501–07M33	16 – 22
90501–10227	8 – 41
90501–12M36	16 – 21
90501–14M02	3 – 28
90501–14M05	19 – 11
90501–16M01	22 – 46
	24 – 50
90501–18M00	18 – 15
90501–23215	15 – 8
90502–10M04	19 – 27
90506–30M00	19 – 23
90508–14M00	19 – 15
91490–16010	15 – 33
	16 – 16
91490–20012	19 – 24
91490–30025	23 – 20
91490–40040	25 – 18
91690–25016	16 – 11
91690–30010	3 – 14
91690–30025	15 – 14
91690–40032	5 – 41
92903–06600	5 – 11
92990–05100	6 – 16
92990–05600	6 – 17
92990–06100	15 – 17
92990–06300	25 – 12
	25 – 15
92990–08100	18 – 10
	20 – 20
92990–08600	13 – 19
	29 – 38
92990–10100	17 – 7
92990–12200	15 – 25
92995–06600	5 – 23
92995–10600	17 – 8
	18 – 63
93101–20048	24 – 56
	32 – 11
93101–22M00	22 – 29
	22 – 54
	24 – 6
	31 – 10
	32 – 10
93101–30M33	3 – 9
	30 – 15

NUMERICAL INDEX
INDICE NUMERICO

PART NO. CODIGO Nº	REF. NO.
93102–35M18	9 – 3
	30 – 2
93104–16M01	3 – 10
	30 – 14
93109–44M00	18 – 33
93210–03261	12 – 20
93210–08287	26 – 14
	26 – 16
	27 – 14
	27 – 16
93210–22M02	3 – 12
	30 – 17
93210–32738	1 – 7
	7 – 8
	30 – 19
93210–41042	22 – 30
	31 – 13
93210–57M00	24 – 57
	32 – 12
93210–65M50	3 – 11
	30 – 16
93210–66M98	22 – 52
	31 – 12
93210–75M51	9 – 15
	30 – 3
93306–00702	22 – 49
93306–20401	24 – 55
93306–306U2	4 – 8
93306–307U0	4 – 6
93310–727V7	4 – 14
93315–217U0	24 – 4
93315–32224	22 – 7
93315–324U1	24 – 8
93317–22204	22 – 53
93332–00001	22 – 10
93332–00003	22 – 12
93332–000U0	24 – 43
93332–000UE	4 – 7
93342–624U0	24 – 9
93390–000U0	24 – 10
93410–16007	24 – 40
93420–36M01	20 – 16
93430–06024	29 – 12
93440–68M03	3 – 13
	4 – 10
93603–21111	4 – 19
93604–08062	22 – 31
	24 – 33

PART NO. CODIGO Nº	REF. NO.
93604–09068	24 – 21
93606–12019	20 – 18
	23 – 5
	25 – 8
93606–25M00	20 – 3
	21 – 3
93608–12063	3 – 5
	18 – 27
93700–06004	18 – 13
94702–00040	1 – 5
	3 – 44
94702–00272	1 – 5
	3 – 44
95303–08700	8 – 12
95380–03600	7 – 18
95380–05600	29 – 9
95380–06600	5 – 24
	14 – 17
	15 – 16
	15 – 32
	18 – 54
	29 – 43
95380–08600	7 – 10
	18 – 11
	18 – 58
	20 – 21
95380–10600	17 – 9
	18 – 65
95380–12800	18 – 44
95D95–06016	25 – 14
97013–06014	7 – 11
97013–06065	5 – 10
97013–08030	8 – 10
97095–05010	19 – 14
97380–05025	29 – 10
97380–08030	29 – 37
97513–06525	5 – 12
	16 – 13
97513–08535	8 – 32
	8 – 34
97595–05510	15 – 22
97603–05117	6 – 20
	30 – 32
97780–40520	16 – 17
97780–50716	5 – 28
97780–60525	24 – 17
97880–05008	12 – 17
97880–06016	22 – 6

PART NO. CODIGO Nº	REF. NO.
97890–05010	6 – 15
97980–05114	5 – 7
	5 – 16
97980–05128	7 – 21
97980–05225	11 – 10
	12 – 10
97D75–10040	17 – 6
97D95–06010	24 – 60
97D95–06012	13 – 23
97D95–06025	18 – 53
97E75–08525	18 – 17
97E75–08530	18 – 25
	18 – 38
	23 – 6
	25 – 9
97E75–08535	18 – 26
97E95–06516	3 – 16
	8 – 28
	8 – 42
	10 – 18
	10 – 19
	11 – 3
	12 – 3
	16 – 6
97E95–06518	22 – 60
97E95–06520	15 – 12
	20 – 14
	21 – 14
97E95–06525	2 – 13
	7 – 2
	10 – 13
	12 – 21
	14 – 9
	14 – 24
	20 – 10
	21 – 10
97E95–06530	8 – 43
	16 – 5
97E95–06540	7 – 26
	9 – 16
97E95–06616	2 – 9
97E95–08516	11 – 5
	12 – 5
97E95–08540	20 – 4
	21 – 4
97E95–08545	18 – 39
	22 – 33
	24 – 35

PART NO. CODIGO Nº	REF. NO.
97E95–08545	31 – 24
	32 – 23
97E95–08550	18 – 57
97E95–08555	22 – 32
	24 – 34
	31 – 23
	32 – 22
97E95–10530	23 – 15
98580–04006	29 – 40
98980–04006	6 – 8
	30 – 25
99080–10600	19 – 9