YAMAHA

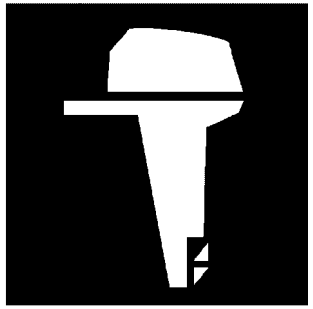

PARTS CATALOGUE
CATALOGO DE REPUESTOS

E9.9DMH'24 (6B3P)
E15DMH'24 (6B4P)

YAMAHA GENUINE Parts & Accessories

1Y6B3-200SA

( )

E9.9DMH/E15DMH
PARTS CATALOGUE
©2024 by Yamaha Motor Co., Ltd.
1st edition, September 2024
All rights reserved.
Any reprinting or unauthorized use
without the written permission of
Yamaha Motor Co., Ltd.
is expressly prohibited.
Printed in Japan.

E9.9DMH/E15DMH
CATALOGO DE REPUESTOS
©2024 por Yamaha Motor Co., Ltd.
1ª edición, septiembre 2024
Todos los derechos reservados.
Toda reproducción o uso no autorizado
sin el consentimiento escrito de
Yamaha Motor Co., Ltd.
quedan expresamente prohibidos
Impreso en Japón.

FOREWORD

This Parts Catalogue is related to the parts for the model(s) on the cover page. When you are ordering replacement parts, please refer to this Parts Catalogue and quote both part numbers and part names correctly.

1. Modifications or additions which have been made after the issue of the Parts Catalogue will be announced in the Parts News.
   It is advisable that you make the necessary corrections to the Parts Catalogue according to the Parts News.

2. Abbreviations
   The following abbreviations are used in this Parts Catalogue.
   "UR" Use specified parts number.
   "UN" Use as many as needed.
   "AP" Alternate Parts
   "LM" Locally Made (Parts need to be ordered locally)
   "F#" Frame No. (Applicable machine No.)
   "O/S" Over Size

3. The number of components for assembly
   - Parts, which are to be supplied in an assembly, are listed with a dot (.) in front of the part name as shown below.
   - The numeral appearing to the right of each component part indicates the quantity of parts for each assembly unit.

PART NO.	DESCRIPTION	Q'TY	REMARKS
2F5–83310–60	FRONT FLASHER LIGHT ASSY	2	
115–83311–60	.BULB (6V–18W)	1	

4. Applicable colours of graphics are represented in the "REMARKS" as shown below.

PART NO.	DESCRIPTION	Q'TY	REMARKS
2N4–24110–00–X5	FUEL TANK COMP.	2	MXR
3J1–24240–10	.GRAPHIC, FUEL TANK	1	FOR MXR

5. Note that the illustrations for reference in finding parts numbers are not to be used for assembling. When assembling, please use the applicable service manual.

6. The asterisk (*) before a reference number indicates modified items after the first edition.

7. Applicable Serial No.
   Engine Serial No.

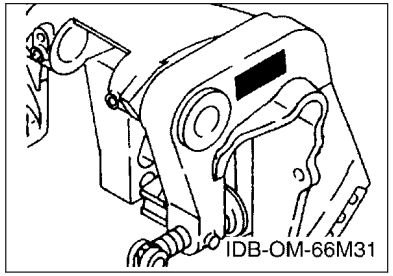

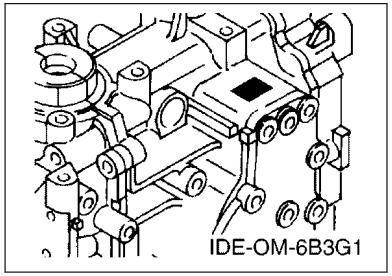

8. Applicable Engine Starting Serial No.

Model	Serial No.	Model	Serial No.
E9.9D	6B3K-1037953	E15D	6B4K-1485981

9. Applicable Colour Code

Abbreviation	Colour Name	Colour Code
DBN1	DARK BLUISH GRAY 1	008D

10. Quantity Column Information

Column No.	Name Of Q'ty Column	Applicable Model
1	6B3P	E9.9DMH
2	6B4P	E15DMH

PROLOGO

Este catálogo de repuestos corresponde a las piezas para el o los modelos que figuran en la página de portada. Al formular el pedido de repuestos, se ruega citar este catálogo y especificar correctamente el número y el nombre de las piezas.

1. Las modificaciones y agregados que se hayan realizado después de la edición de este Catálogo de Repuestos, serán anunciados en las Informaciones de Recambios.
   Es recomendable que se hagan las correcciones necesarias en el Catálogo de Repuestos de acuerdo con las Informaciones de Recambios.

2. Abreviaciones
   En este. Catálogo de Repuestos se emplean las siguientes abreviaciones.
   "UR" Usar el número de partes especificado
   "UN" Usar la cantidad necesaria
   "AP" Piezas sustitutivas
   "LM" Fabricación local (Hay que pedir los repuestos en las cercanías)
   "F#" Nº de bastidor (Nº aplicable a la máquina)
   "O/S" Sobredimensionado

3. La cantidad de componentes para el montaje
   - Los componentes, suministrados como conjunto, se describen con un punto (.) que precede al nombre del parte como se indica a continuación.
   - La numeración que aparece a la derecha de cada descripción indica la cantidad de partes por cada unidad de conjunto.

CODIGO Nº	DESCRIPCION	CANT.	OBSERVACIONES
2F5–83310–60	ENSAMBLAJE DE LA LUZ	2	
115–83311–60	.BOMBILLA (6V–18W)	1	

4. Los colores de los componentes se indican como sigue en la columna de "OBSERVACIONES".

CODIGO Nº	DESCRIPCION	CANT.	OBSERVACIONES
2N4–24110–00–X5	COMP. DEL TANQUE	2	MXR
3J1–24240–10	.GRAFICO, DEL TANQUE	1	PARA MXR

5. Debe tenerse en cuenta que las ilustraciones sirven como guia para la búsqueda de los números de partes y no deben usarse para el montaje. Durante el montaje, se recomienda usar el manual de taller correspondiente.

6. EL asterisco (*) antes del número de referencia indica los elementos modificados después de la primera edición.

7. Números de serie
   Nº de Serie del motor

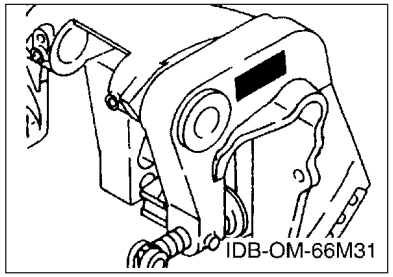

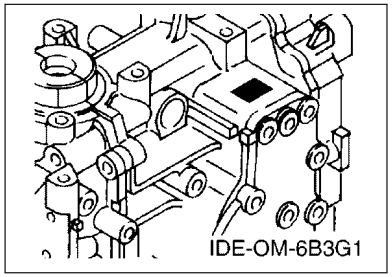

8. Números de serie del motor

Modelo	Nº de serie	Modelo	Nº de serie
E9.9D	6B3K-1037953	E15D	6B4K-1485981

9. Códigos de color aplicables

Abreviatura	Nombre de color	Código de color
DBN1	DARK BLUISH GRAY 1	008D

10. Informacion para la columna de cantidades

Columna Nº	Nombre de la columna de cantidades	Modelo aplicable
1	6B3P	E9.9DMH
2	6B4P	E15DMH

CONTENTS

SCHEDULED SERVICE PARTS.....1
TOP COWLING.....2
CYLINDER & CRANKCASE.....3
CRANKSHAFT & PISTON.....5
INTAKE.....7
CARBURETOR.....8
FUEL.....10
STARTER.....11
GENERATOR.....13
ELECTRICAL.....14
BOTTOM COWLING.....15
STEERING.....16
CONTROL.....17
BRACKET 1.....19
BRACKET 2.....22
UPPER CASING.....24
LOWER CASING & DRIVE 1.....26
LOWER CASING & DRIVE 2.....29
FUEL TANK.....31
OPTIONAL PARTS.....32
REPAIR KIT 1.....33
REPAIR KIT 2.....34

INDEX

NUMERICAL INDEX.....35

CONTENIDO

PARTES DE REPUESTO TEMPORALES..... 1
SOPORTE SUPERIOR..... 2
CYLINDRO & CARTER..... 3
CIGUENAL & PISTON.....5
ADMISION.....7
CARBURADOR..... 8
COMBUSTIBLE..... 10
ARRANQUE..... 11
GENERADOR.....13
ELECTRICO..... 14
CUBIERTA INFERIOR..... 15
DIRECCION.....16
CONTROL..... 17
SOPORTE 1..... 19
SOPORTE 2..... 22
FUNDA SUPERIOR.....24
IMPULSOR E INFERIOR 1..... 26
IMPULSOR E INFERIOR 2..... 29
DEPOSITO DE COMBUSTIBLE..... 31
PARTES OPCIONALES..... 32
ESTUCHE REPARATION 1..... 33
ESTUCHE REPARATION 2..... 34

INDICE

INDICE NUMERICO..... 35

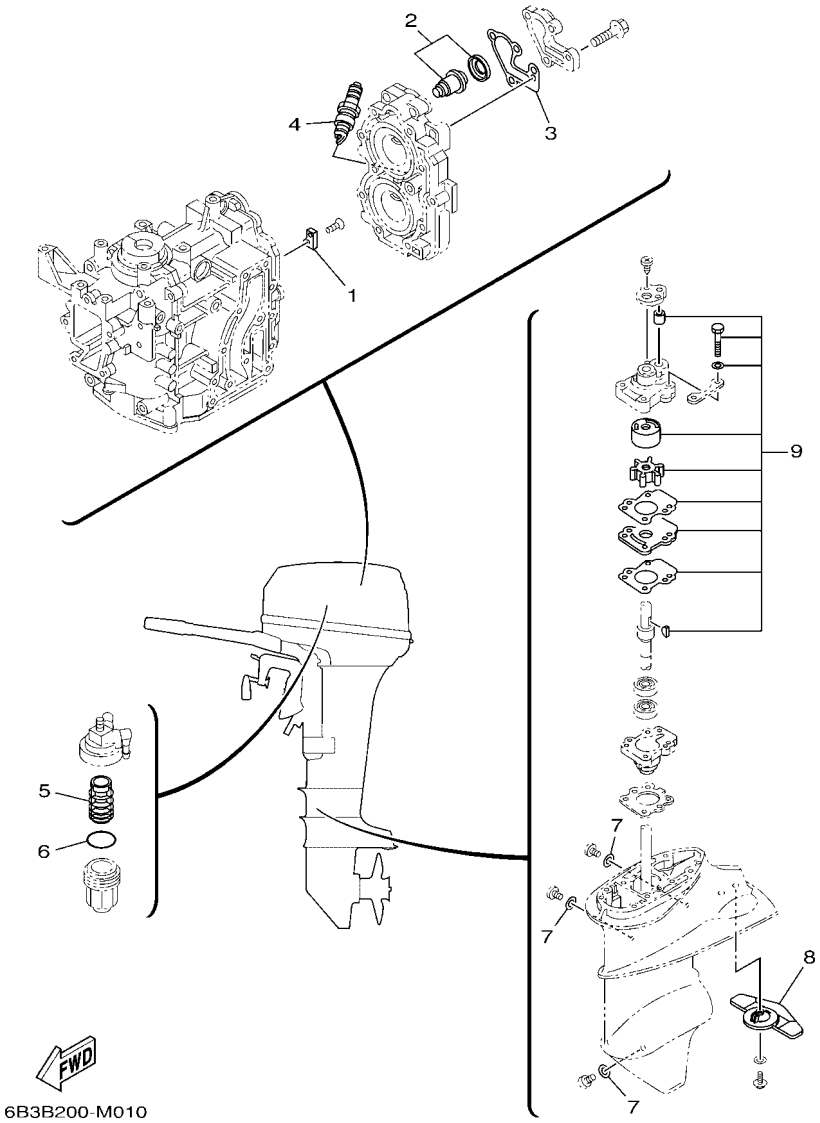

FIG. 1 SCHEDULED SERVICE PARTS — PARTES DE REPUESTO TEMPORALES

REF. NO.	PART NO. CODIGO Nº	DESCRIPTION DESCRIPCION	6B3P	6B4P				REMARKS OBSERVACIONES
1	682–11325–00	ANODE ANODO	1	1				
2	6E5–12411–30	THERMOSTAT TERMOSTAT	1	1				
3	682–12414–A1	GASKET, COVER EMPAQUE	1	1				
4	94702–00160	PLUG, SPARK (NGK B8HS-10) BUJIA (NGK B8HS-10)	2	2				UR UR
	94702–00247	PLUG, SPARK (NGK BR8HS-10) BUJIA (NGK BR8HS-10)	2	2				UR FOR CAR UR FOR CAR
5	61N–24563–00	ELEMENT, FILTER ELEMENTO DEL FILTRO	1	1				
6	93210–32738	O-RING ANILLO O	1	1				
7	90430–08003	GASKET JUNTA	3	3				
8	6B4–45251–00	ANODE CATODE	1	1				
9	6B4–W0078–0C	WATER PUMP REPAIR KIT ESTUCHE REPARACION BOMBA AGUA	1	1				

FIG. 2 TOP COWLING — SOPORTE SUPERIOR

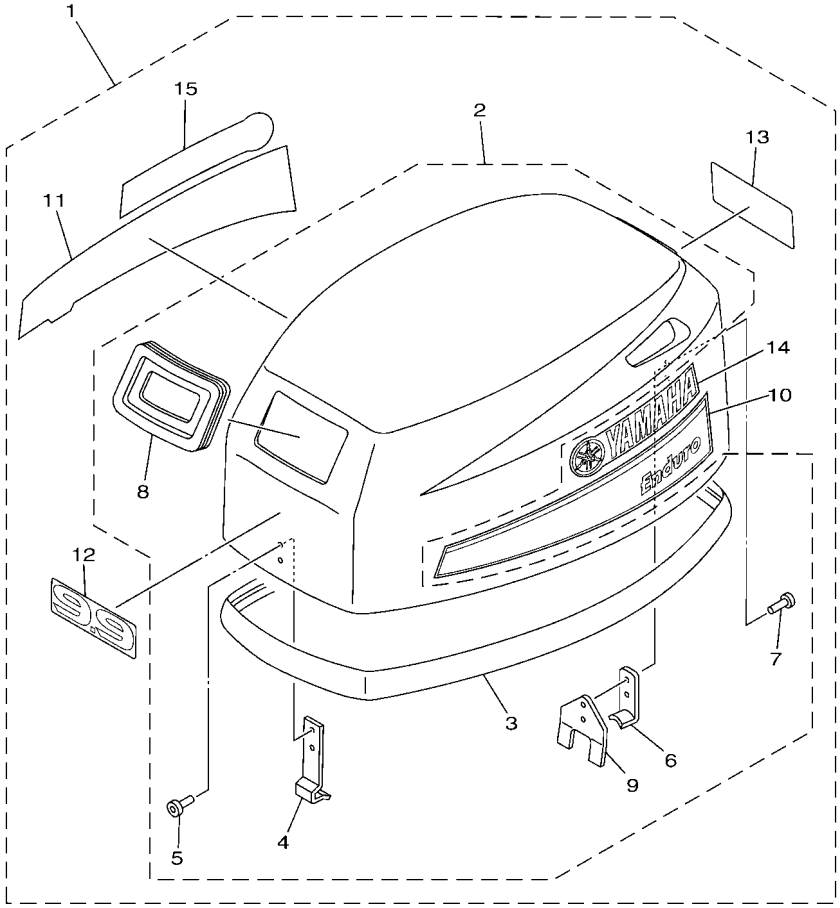

6B3F200-R020

REF. NO.	PART NO. CODIGO Nº	DESCRIPTION DESCRIPCION	6B3P	6B4P				REMARKS OBSERVACIONES
1	6B3–42610–23	TOP COWLING ASSY SOPORTE SUPERIOR COMPL.	1					
	6B4–42610–43	TOP COWLING ASSY SOPORTE SUPERIOR COMPL.		1				
	6B4–42610–53	TOP COWLING ASSY SOPORTE SUPERIOR COMPL.		1				FOR IDN,SEN FOR IDN,SEN
2	6B4–4261A–03	.TOP COWLING W/O GRAPHICS .SOPORTE SUPERIOR SIN GRAFICOS	1	1				
	6B4–4261A–13	.TOP COWLING W/O GRAPHICS .SOPORTE SUPERIOR SIN GRAFICOS		1				FOR IDN,SEN FOR IDN,SEN
3	6B4–42615–01	..SEAL ..SELLO	1	1				
4	6B4–42651–00	..HOOK ..GANCHO	1	1				
5	90266–04M00	..RIVET ..REMACHE	2	2				
6	6B4–42647–00	..HOLDER, CLAMP BAND ..MORDAZA DE ABRAZADERA	1	1				
7	90266–04005	..RIVET ..REMACHE	2	2				
8	6B4–15761–00	..SEAL, RUBBER 1 ..SELLO DE GOMA 1	1	1				
9	6B4–42646–00	..PLATE, CLAMP ..PLACA GRAMPA	1	1				
10	677–42675–10	.GRAPHIC, SIDE 1 .CALCAMONIA LATERAL 1	1	1				
11	677–42676–10	.GRAPHIC, SIDE 2 .CALCAMONIA LATERAL 2	1	1				
12	63V–42678–41	.GRAPHIC, REAR .CALCAMONIA TRASERA	1					
	63W–42678–40	.GRAPHIC, REAR .CALCAMONIA TRASERA		1				
13	63V–42678–41	.GRAPHIC, REAR .CALCAMONIA TRASERA	1					
	63W–42678–40	.GRAPHIC, REAR .CALCAMONIA TRASERA		1				
14	6E0–42681–41	.MARK, COWLING .MARCA DE CUBIERTA	1	1				
15	6E0–42681–41	.MARK, COWLING .MARCA DE CUBIERTA	1	1				

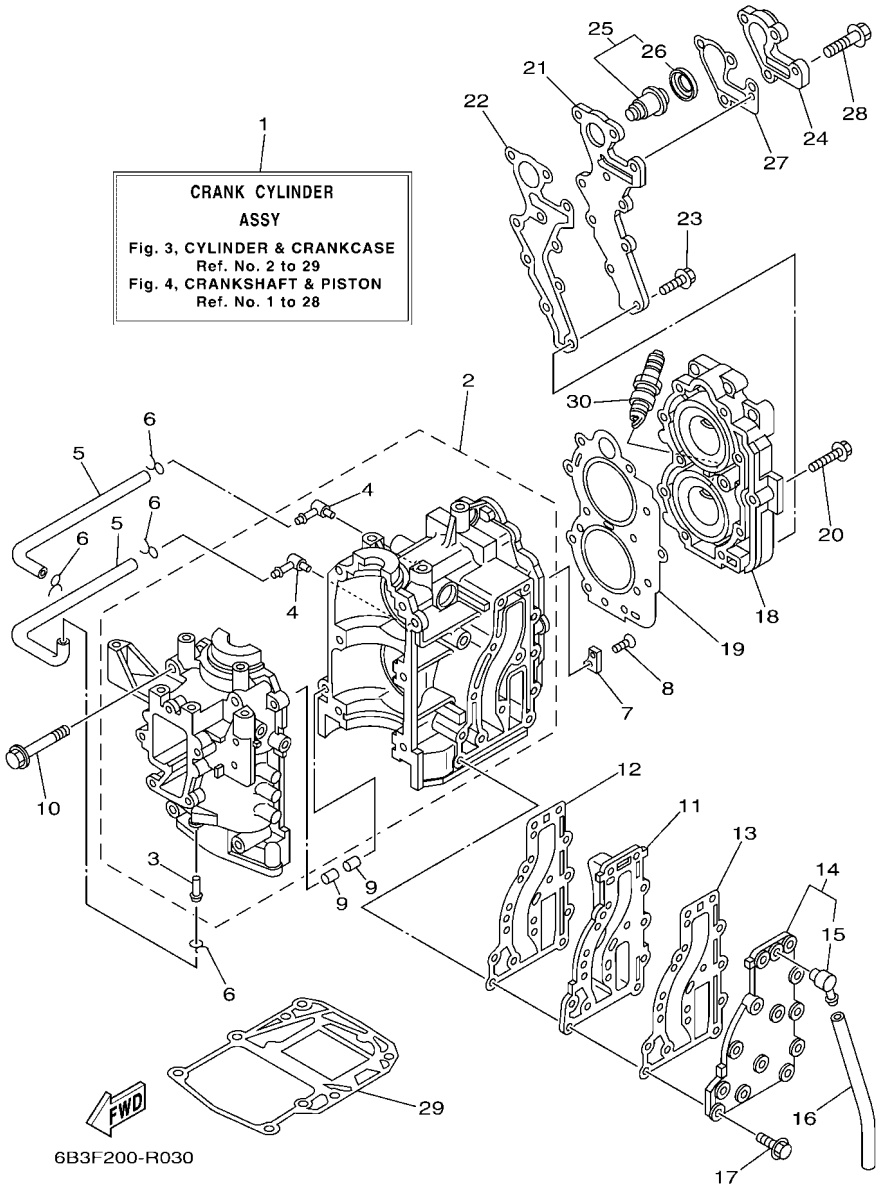

FIG. 3 CYLINDER & CRANKCASE — CYLINDRO & CARTER

REF. NO.	PART NO. CODIGO Nº	DESCRIPTION DESCRIPCION	6B3P	6B4P				REMARKS OBSERVACIONES
1	6B4–W0090–01–1S	CRANK CYLINDER ASSY BLOQUE MOTOR COMPLETO	1	1				
2	6B4–15100–01	CRANKCASE ASSY CARTER COMPLETO	1	1				
3	624–14485–00	.PIPE, JOINT .TUBO DE UNION	1	1				
4	650–14485–03	.PIPE, JOINT .TUBO DE UNION	2	2				
5	90445–07M08	HOSE (L220) TUBO (L220)	2	2				
6	90467–06016	CLIP PRESILLA	4	4				
7	682–11325–00	ANODE ANODO	1	1				
8	98780–05015	SCREW, FLAT HEAD TORNILLO, CABEZA PLANA	1	1				
9	93606–12019	PIN, DOWEL PASADOR DE CLAVIJA	2	2				
10	90119–08M07	BOLT, WITH WASHER TORNILLO CON ARANDELA	6	6				
11	63V–41111–00–1S	INNER COVER, EXHAUST CUBIERTA INTERIOR DE ESCAPE	1	1				
12	6B4–41112–A0	GASKET, EXHAUST INNER COVER EMPAQUE	1	1				
13	63V–41112–A0	GASKET, EXHAUST INNER COVER EMPAQUE	1	1				
14	63V–41113–00–1S	OUTER COVER, EXHAUST CUBOERTA EXTERIOR DE ESCAPE	1	1				
15	676–11372–00	.NIPPLE, HOSE .NIPLE DE MANGUERA	1	1				
16	90445–09104	HOSE (L300) TUBO (L300)	1	1				
17	90119–06MA4	BOLT, WITH WASHER TORNILLO CON ARANDELA	13	13				
18	6B4–11111–00–1S	HEAD, CYLINDER 1 CULATA CILINDRO 1	1	1				
19	63V–11181–A2	GASKET, CYLINDER HEAD 1 JUNTA, DE CULATA 1	1	1				
20	90105–07M05	BOLT, FLANGE TORNILLO	11	11				
21	6B4–11191–00–1S	COVER, CYLINDER HEAD 1 TAPA CULATA DE CILINDRO 1	1	1				
22	6B4–11193–A1	GASKET, HEAD COVER 1 EMPAQUE	1	1				
23	90119–06023	BOLT, WITH WASHER TORNILLO CON ARANDELA	6	6				
24	682–12413–00–1S	COVER, THERMOSTAT CUBIERTA TERMOSTATO	1	1				
25	6E5–12411–30	THERMOSTAT TERMOSTAT	1	1				
26	688–12412–00	.SEAL, THERMOSTAT .SELLO TERMOSTATO	1	1				
27	682–12414–A1	GASKET, COVER EMPAQUE	1	1				

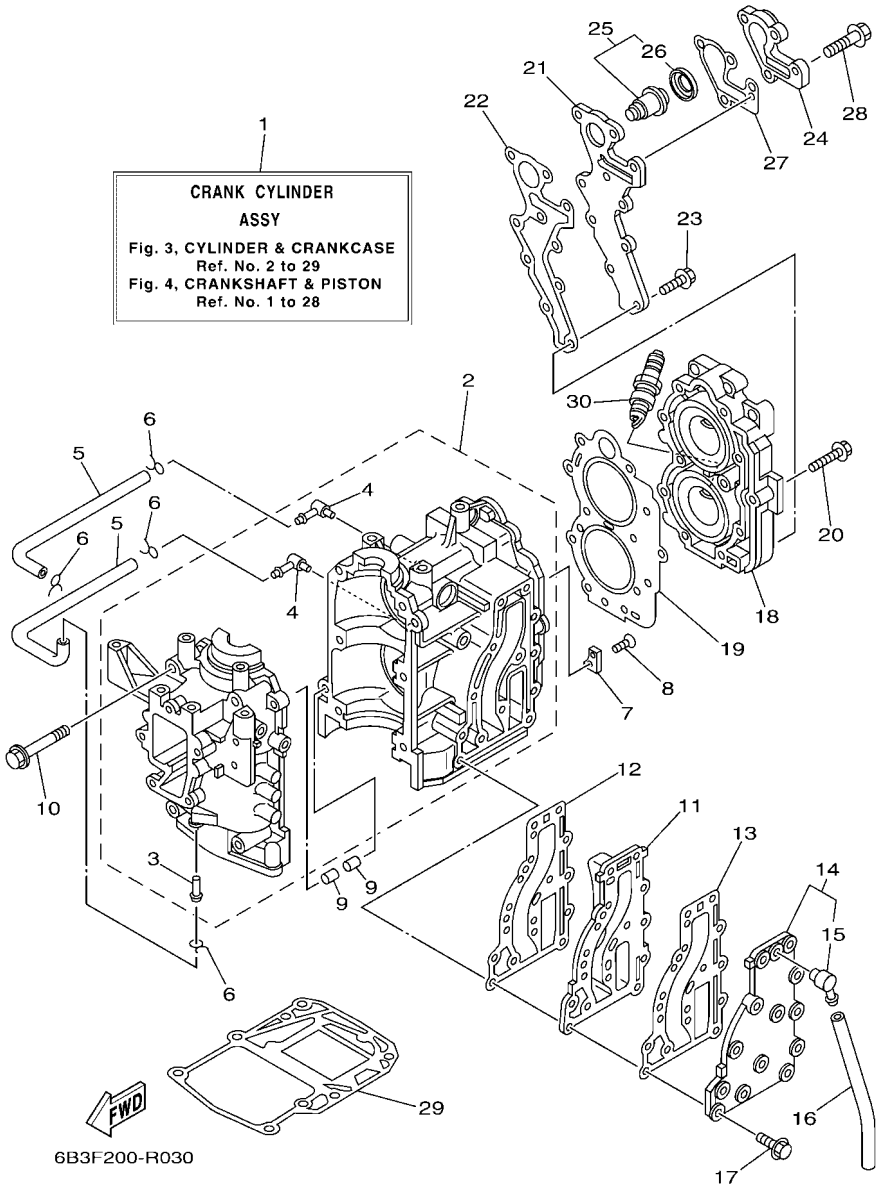

FIG. 3 CYLINDER & CRANKCASE — CYLINDRO & CARTER

REF. NO.	PART NO. CODIGO Nº	DESCRIPTION DESCRIPCION	6B3P	6B4P				REMARKS OBSERVACIONES
28	90119–06MA3	BOLT, WITH WASHER TORNILLO CON ARANDELA	4	4				
29	6B4–11351–A1	GASKET, CYLINDER JUNTA, DE CILINDRO	1	1				
30	94702–00160	PLUG, SPARK (NGK B8HS-10) BUJIA (NGK B8HS-10)	2	2				
	94702–00247	PLUG, SPARK (NGK BR8HS-10) BUJIA (NGK BR8HS-10)	2	2				FOR CAR FOR CAR

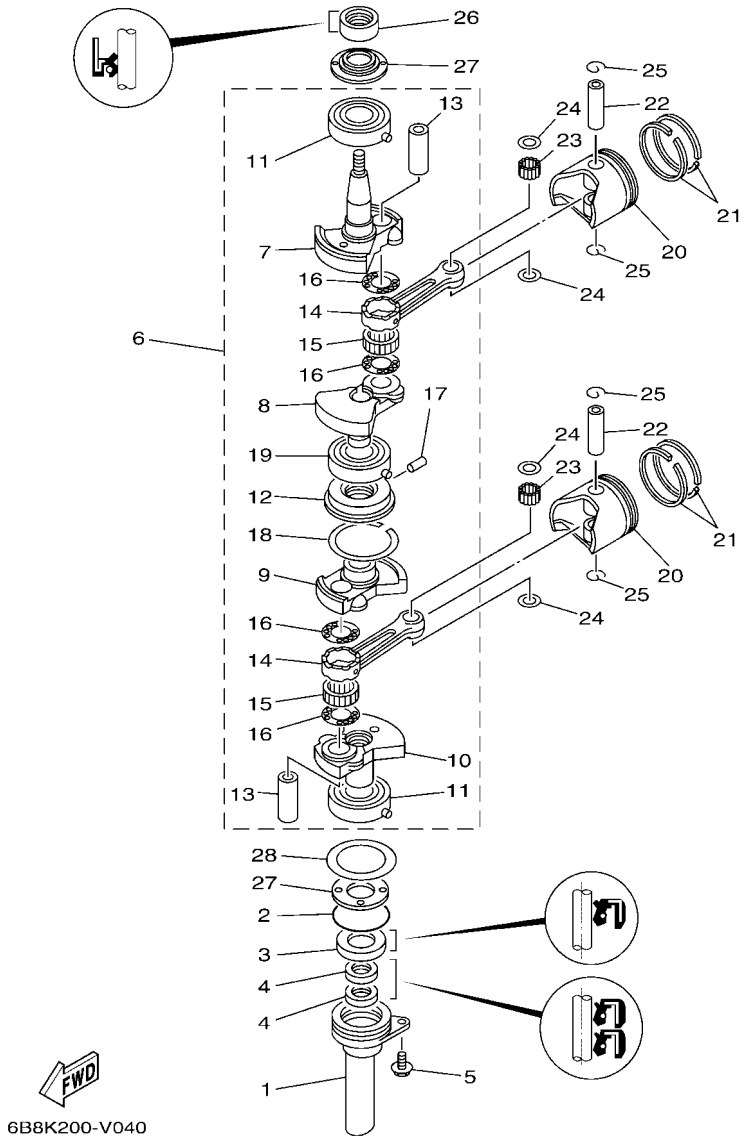

FIG. 4 CRANKSHAFT & PISTON — CIGUENAL & PISTON

REF. NO.	PART NO. CODIGO Nº	DESCRIPTION DESCRIPCION	6B3P	6B4P				REMARKS OBSERVACIONES
1	6B4–15396–00–CA	HOUSING, OIL SEAL CAJA DE SELLO DE ACEITE	1	1				
2	93210–46M16	O-RING ANILLO O	1	1				
3	93102–25010	OIL SEAL SELLO ACEITE	1	1				
4	93101–13M27	OIL SEAL SELLO ACEITE	2	2				
5	97E95–06516	BOLT, HEXAGON W/W DEEP RECESS TORNILLO HEXAGONAL CON RONDONA	1	1				
6	6B4–11400–00	CRANKSHAFT ASSY CIGUENAL COMPLETO	1	1				
7	63V–11412–02	.CRANK 1 .MANIVELA 1	1	1				
8	63V–11422–02	.CRANK 2 .MANIVELA 2	1	1				
9	63V–11432–02	.CRANK 3 .MANIVELA 3	1	1				
10	63V–11442–02	.CRANK 4 .MANIVELA 4	1	1				
11	93306–205A1	.BEARING .COJINETE	2	2				
12	63V–11515–02	.SEAL, LABYRINTH 1 .SELLO LABERINTO 1	1	1				
13	682–11681–00	.PIN, CRANK 1 .PASADOR MANIVELA 1	2	2				
14	6K4–11651–00	.ROD, CONNECTING .BIELA	2	2				
15	93310–620W5	.BEARING .COJINETE DE RODILLOS	2	2				
16	90209–20M23	.WASHER .ARANDELA DE SEPARACION	4	4				
17	91609–20008	.PIN, SPRING .PASADOR DE RESORTE	1	1				
18	93440–52009	.CIRCLIP .SEGURO	1	1				
19	93390–00029	.BEARING .COJINETE DE RODILLOS	1	1				
20	6E7–11631–00–97	PISTON (STD) PISTON (NORMA)	2	2				
	6E7–11635–00	PISTON (0.25MM O/S) PISTON (0.25MM O/S)	2	2				AP AP
	6E7–11636–00	PISTON (0.50MM O/S) PISTON (0.50MM O/S)	2	2				AP AP
21	682–11610–01	PISTON RING SET (STD) JUEGO DE ANILLOS (NORMA)	2	2				
	682–11610–11	PISTON RING SET (0.25MM O/S) JUEGO DE ANILLOS (0.25MM O/S)	2	2				AP AP
	682–11610–21	PISTON RING SET (0.50MM O/S) JUEGO DE ANILLOS (0.50MM O/S)	2	2				AP AP
22	634–11633–00	PIN, PISTON PASADOR, PISTON	2	2				
23	93602–14104	PIN, DOWEL PASADOR DE CLAVIJA	50	50				

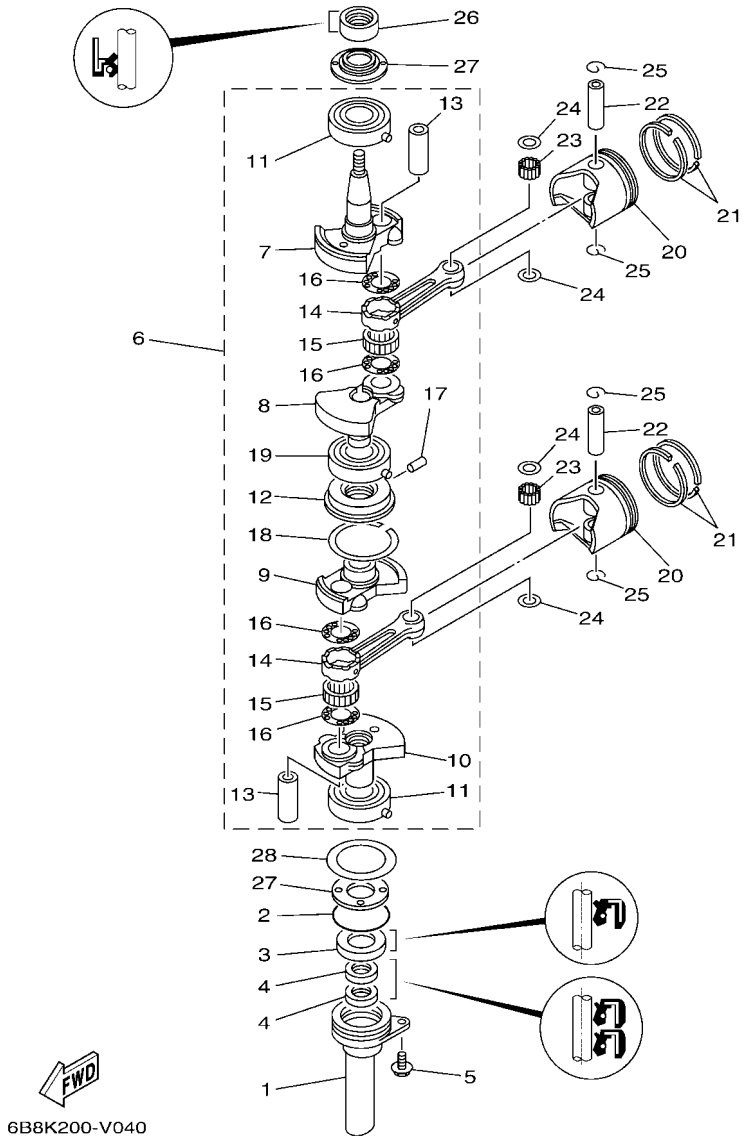

FIG. 4 CRANKSHAFT & PISTON — CIGUENAL & PISTON

REF. NO.	PART NO. CODIGO Nº	DESCRIPTION DESCRIPCION	6B3P	6B4P				REMARKS OBSERVACIONES
24	90201–14377	WASHER, PLATE ARANDELA PLANA	4	4				
25	93450–15023	CIRCLIP SEGURO	4	4				
26	93110–23M00	OIL SEAL SELLO ACEITE	1	1				
27	63V–11445–00	SPACER ESPACIADOR	2	2				
28	90201–46M29	WASHER, PLATE ARANDELA PLANA	1	1				

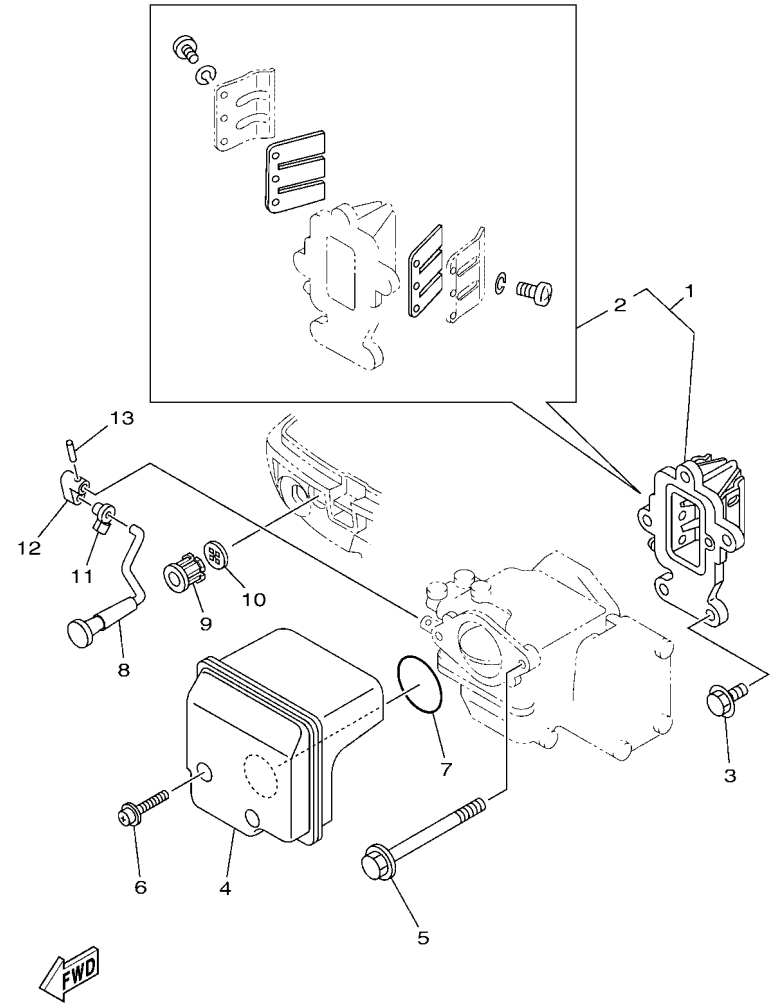

6B3H200-T050

FIG. 5 INTAKE — ADMISION

REF. NO.	PART NO. CODIGO Nº	DESCRIPTION DESCRIPCION	6B3P	6B4P				REMARKS OBSERVACIONES
1	63V–13610–11	REED VALVE ASSY VALVULA DE LAMINAS COMPLETA	1					
	63W–13610–01	REED VALVE ASSY VALVULA DE LAMINAS COMPLETA		1				
2	682–W0004–01	.REED SET .JUEGO DE VALVULAS DE LENGUETA	1	1				
3	97E95–06520	BOLT, HEXAGON W/W DEEP RECESS TORNILLO HEXAGONAL CON RONDONA	3	3				
4	6B4–14440–A0	SILENCER ASSY, INTAKE SILENCIADOR COMPL DE ADMISION	1	1				
5	97E95–06595	BOLT, HEXAGON W/W DEEP RECESS TORNILLO HEXAGONAL CON RONDONA	2	2				
6	90159–05007	SCREW, WITH WASHER TORNILLO CON VALONA	2	2				
7	93210–35M86	O-RING ANILLO O	1	1				
8	6B4–41271–01	KNOB, CHOKE PERILLA AHOGADOR	1	1				
9	6B4–41273–00	GROMMET TAPON PROTECTOR	1	1				
10	6B4–41274–00	GROMMET 2 TAPON 2	1	1				
11	6B4–41262–00	JOINT, CHOKE LEVER CONECTOR DE AHOGADOR	1	1				
12	6B4–41252–00	LEVER, CHOKE 1 PALANCA AHOGADOR 1	1	1				
13	91690–20010	PIN, SPRING PASADOR DE RESORTE	1	1				

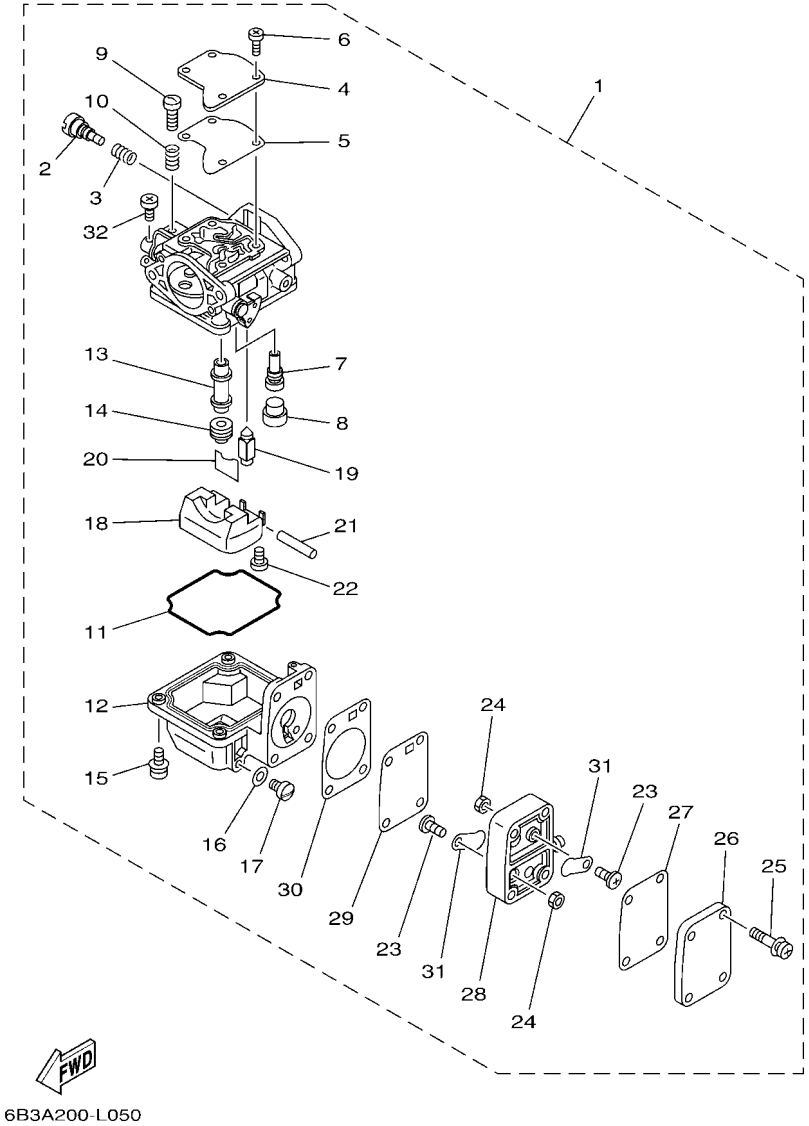

FIG. 6 CARBURETOR — CARBURADOR

REF. NO.	PART NO. CODIGO Nº	DESCRIPTION DESCRIPCION	6B3P	6B4P				REMARKS OBSERVACIONES
1	6B3–14301–04	CARBURETOR ASSY 1 CARBURADOR COMPLETO 1	1					
	6B4–14301–04	CARBURETOR ASSY 1 CARBURADOR COMPLETO 1		1				
2	679–14923–01	.SCREW, PILOT .TORNILLO DE AJUSTE	1	1				
3	697–14555–00	.SPRING .RESORTE	1	1				
4	63V–14527–00	.PLATE .PLACA	1	1				
5	63V–14126–00	.GASKET .EMPAQUE	1	1				
6	65L–14565–00	.SCREW .TORNILLO	4	4				
7	676–14948–06	.JET (#48) .INYECTOR (#48)	1	1				
8	679–14966–00	.RUBBER CAP .TAPA	1	1				
9	63V–14523–00	.SCREW, STOP .TORNILLO DE TOPE	1	1				
10	90501–10326	.SPRING, COMPRESSION .RESORTE DE COMPRESION	1	1				
11	63V–14984–00	.GASKET, FLOAT CHAMBER .EMPAQUE CAMARA DE BOIA	1	1				
12	63V–14980–02	.BODY, FLOAT CHAMBER .CUERPO CAMARA DE BOIA	1	1				
13	6B3–14947–00	.JET, NEEDLE .INYECTOR DE AGUJA	1					
	63V–14947–00	.JET, NEEDLE .INYECTOR DE AGUJA		1				
14	676–14943–29	.JET, MAIN (#110) .INYECTOR PRINCIPAL (#110)	1					
	6G1–14943–79	.JET, MAIN (#108) .INYECTOR PRINCIPAL (#108)		1				
15	97980–04114	.SCREW, WITH WASHER .TORNILLO, CON ARANDELA	4	4				
16	65W–14398–00	.GASKET .EMPAQUE	1	1				
17	65W–14992–09	.SCREW, DRAIN .TORNILLO DE DRENAJE	1	1				
18	63V–14985–00	.FLOAT .BOIA	1	1				
19	6AH–14546–00	.VALVE, NEEDLE .VALVULA DE AGUJA	1	1				
20	633–14159–00	.CLIP .PRESILLA	1	1				
21	6H4–14548–00	.PIN, FLOAT ARM .PASADOR DE BRAZO DE BOIA	1	1				
22	98580–04008	.SCREW, PAN HEAD .TORNILLO DE CABEZA CRUZADA	1	1				
23	98980–03006	.SCREW, BIND .TORNILLO DE LIGAR	2	2				
24	95380–03600	.NUT .TUERCA	2	2				

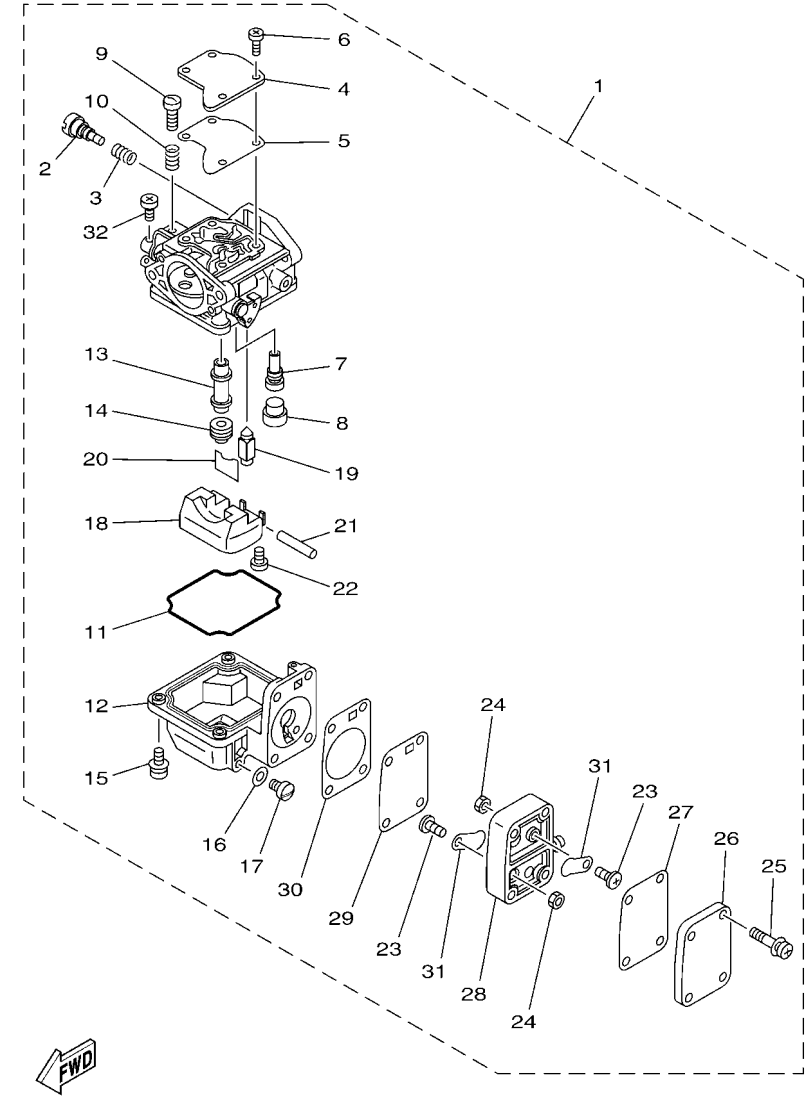

FIG. 6 CARBURETOR — CARBURADOR

REF. NO.	PART NO. CODIGO Nº	DESCRIPTION DESCRIPCION	6B3P	6B4P				REMARKS OBSERVACIONES
25	97980–04123	.SCREW, WITH WASHER .TORNILLO, CON ARANDELA	4	4				
26	6G1–24452–00	.COVER .CUBIERTA	1	1				
27	63V–24411–00	.DIAPHRAGM .DIAFRAGMA	1	1				
28	6G1–24412–02	.BODY 1 .CUERPO 1	1	1				
29	6G1–24411–00	.DIAPHRAGM .DIAFRAGMA	1	1				
30	6G1–24431–01	.GASKET, FUEL PUMP 1 .EMPAQUE BOMBA COMBUST 1	1	1				
31	6L5–24421–00	.VALVE, CHECK .VALVULA DE RETENCION	2	2				
32	98580–04006	.SCREW, PAN HEAD .TORNILLO DE CABEZA CRUZADA	1	1				

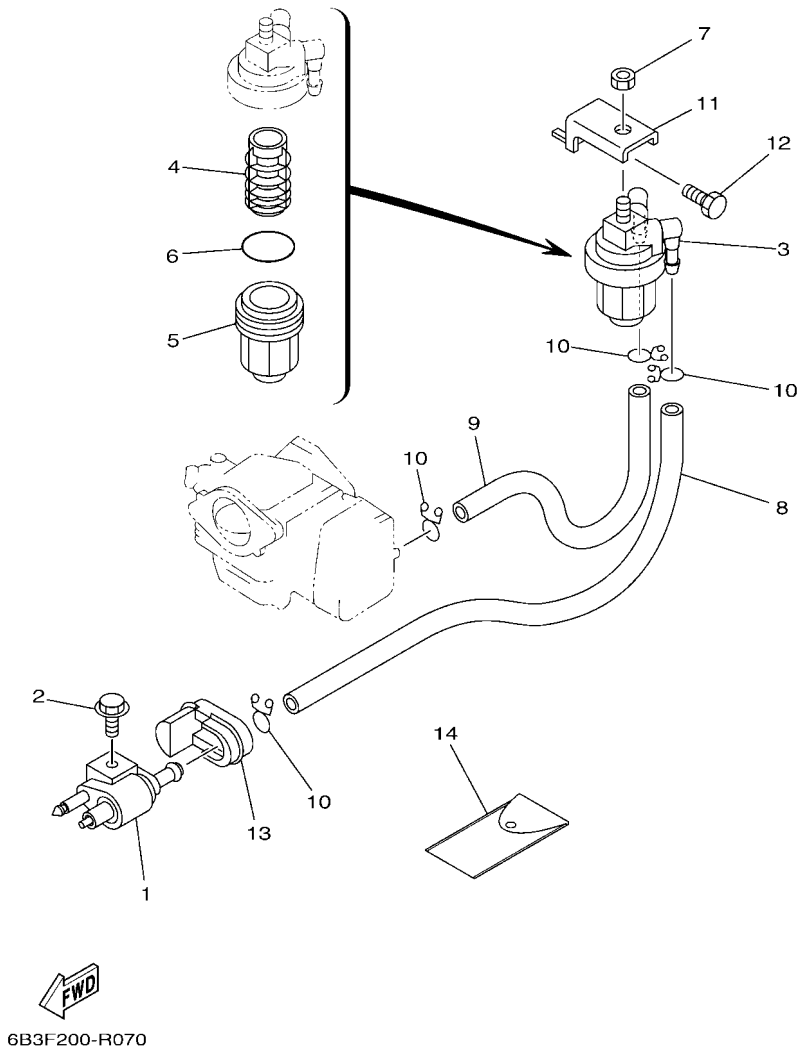

FIG. 7 FUEL — COMBUSTIBLE

REF. NO.	PART NO. CODIGO Nº	DESCRIPTION DESCRIPCION	6B3P	6B4P				REMARKS OBSERVACIONES
1	6G1–24304–10	FUEL PIPE JOINT COMP. 1 CONECTOR MANGUERA COMBUST.1	1	1				
2	97E95–06520	BOLT, HEXAGON W/W DEEP RECESS TORNILLO HEXAGONAL CON RONDONA	1	1				
3	61N–24560–00	FILTER ASSY FILTRO COMPLETO	1	1				
4	61N–24563–00	.ELEMENT, FILTER .ELEMENTO DEL FILTRO	1	1				
5	61N–24521–00	.CUP, FILTER .COPA DE FILTRO	1	1				
6	93210–32738	.O-RING .ANILLO O	1	1				
7	95380–08600	NUT TUERCA	1	1				
8	90445–09104	HOSE (L300) TUBO (L300)	1	1				
9	90445–09M00	HOSE (L180) TUBO (L180)	1	1				
10	90467–08004	CLIP PRESILLA	4	4				
11	648–24566–02	BRACKET, FILTER SOPORTE DEL FILTRO	1	1				
12	97013–06010	BOLT PERNO	1	1				
13	6B4–24329–00	SEAL SELLO	1	1				
14	656–W2810–03	TOOL KIT JUEGO DE HERRAMIENTAS	1	1				

FIG. 8 STARTER ARRANQUE

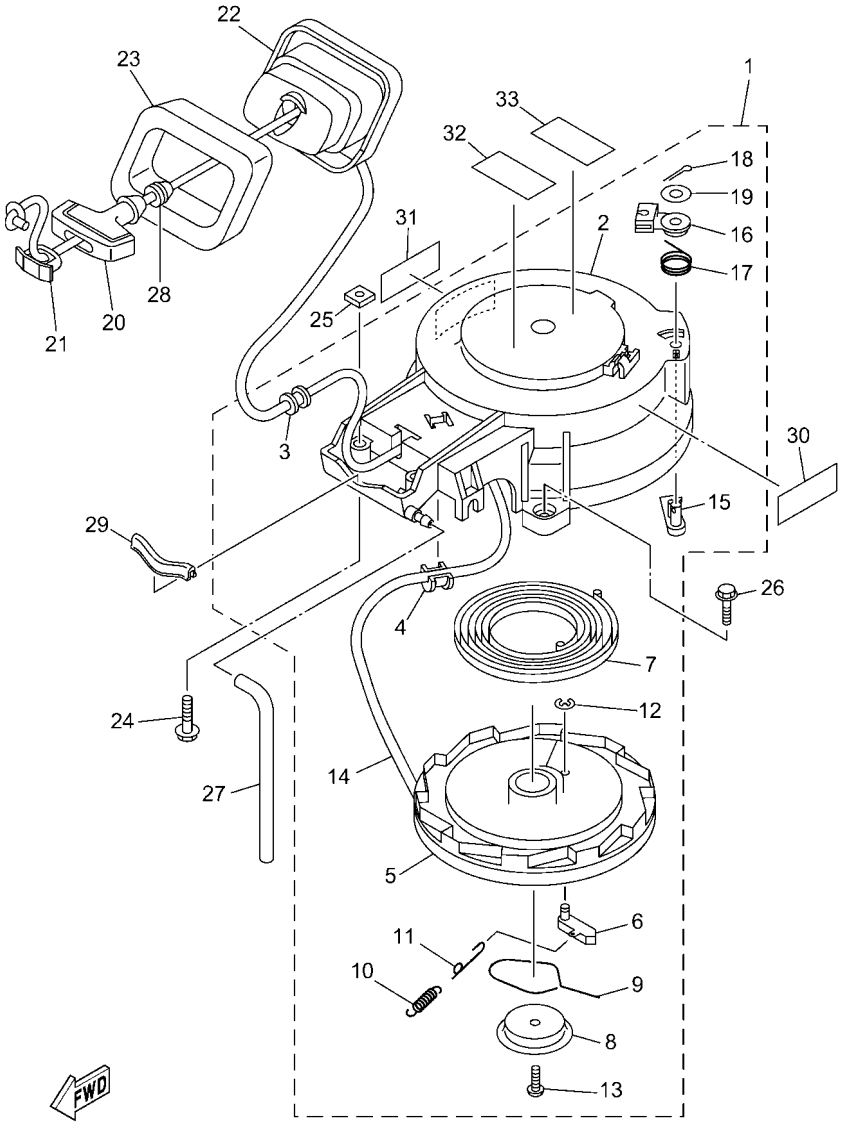

6B3P200-Y080

*1:CUT FROM 50M ROLLS,PART NO.90890-44373,CUTTING LENGTH 1.8M

*1:CORTE DE UN RODILLO DE 50M , PARTS NUMERO 90890-44373, LARGO DEL CORTE 1.8M

REF. NO.	PART NO. CODIGO Nº	DESCRIPTION DESCRIPCION	6B3P	6B4P				REMARKS OBSERVACIONES
1	6B4–15710–10	STARTER ASSY ARRANQUE COMPLETO	1	1				
2	6B4–15711–10	.CASE, STARTER .CAJA DE ARRANQUE	1	1				
3	63V–15764–00	.COLLAR 1 .COLLAR 1	1	1				
4	68T–15764–00	.COLLAR 1 .COLLAR 1	1	1				
5	63V–15714–00	.DRUM, SHEAVE .TAMBOR ROLDANA	1	1				
6	63V–15741–00	.PAWL, DRIVE .TRINQUETE DE TRACCION	1	1				
7	63V–15713–00	.SPRING, STARTER .RESORTE DE ARRANQUE	1	1				
8	63V–15716–10	.PLATE, DRIVE .PLACA DE TRACCION	1	1				
9	63V–15705–10	.SPRING, DRIVE PAWL .RESORTE	1	1				
10	63V–15767–01	.SPRING .RESORTE	1	1				
11	68T–15784–00	.SPRING, RETURN .RESORTE DE RETORNO	1	1				
12	63V–15744–00	.CIRCLIP .SEGURO	1	1				
13	68T–15793–00	.SCREW .TORNILLO	1	1				
14	*	.WIRE, STARTER (L:1800MM) .CUERDA DE ARRANQUE (L:1800MM)	1	1				*1 *1
15	63V–15794–00	.STOPPER .TOPE	1	1				
16	63V–15748–00	.PLUNGER, STARTER STOP .EMBOLO SEGURO DE ARRANQUE	1	1				
17	63V–15734–00	.SPRING, RETURN .RESORTE DE RETORNO	1	1				
18	91490–16018	.PIN. COTTER .CHAVETA	1	1				
19	63V–15726–00	.WASHER, FLAT .ARANDELA PLANA	1	1				
20	6G1–15755–00	HANDLE, STARTER MANIJA DE ARRANQUE	1	1				
21	6G1–15779–00	COVER CUBIERTA	1	1				
22	6B4–15758–A0	GUIDE, WIRE GUIA DE CABLE	1	1				
23	6B4–15762–00	SEAL, RUBBER 2 SELLO DE GOMA 2	1	1				
24	97E95–06535	BOLT, HEXAGON W/W DEEP RECESS TORNILLO HEXAGONAL CON RONDONA	2	2				
25	90173–06009	NUT, SQUARE TUERCA CUADRADA	2	2				
26	90119–06283	BOLT, WITH WASHER TORNILLO CON ARANDELA	3	3				
27	6J8–24311–00	PIPE, FUEL 1 TUBO DE COMBUSTIBLE 1	1	1				

FIG. 8 STARTER — ARRANQUE

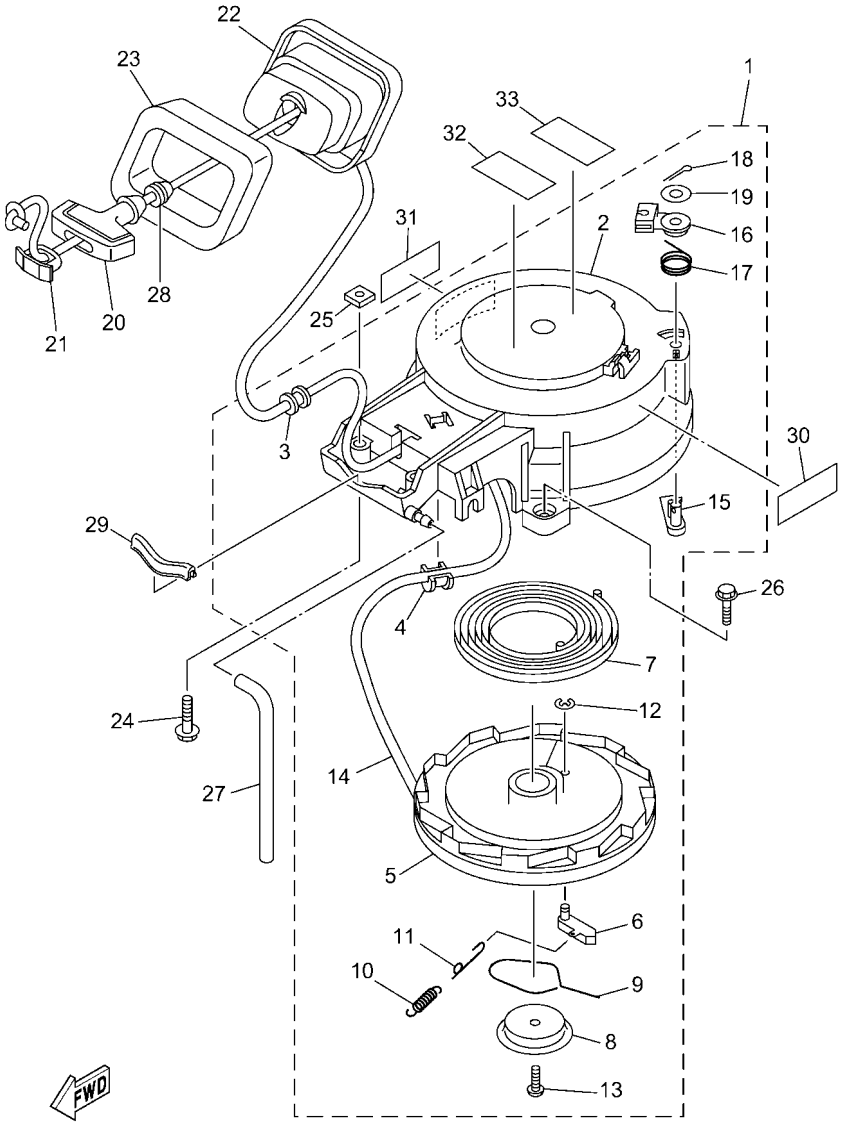

6B3P200-Y080

*1:CUT FROM 50M ROLLS,PART NO.90890-44373,CUTTING LENGTH 1.8M

*1:CORTE DE UN RODILLO DE 50M , PARTS NUMERO 90890-44373, LARGO DEL CORTE 1.8M

REF. NO.	PART NO. CODIGO Nº	DESCRIPTION DESCRIPCION	6B3P	6B4P				REMARKS OBSERVACIONES
28	6A0–15789–01	DAMPER AMORTIGUADOR	1	1				
29	6B4–15663–01	SEAL SELLO	1	1				
30	6EE–81994–40	LABEL, SAFETY ETIQUETA DE SEGURIDAD	1	1				
31	6EE–81994–50	LABEL, SAFETY ETIQUETA DE SEGURIDAD	1	1				
32	6EE–81995–40	LABEL, WARNING ETIQUETA DE PRECAUCION	1	1				
33	6EE–81995–50	LABEL, WARNING ETIQUETA DE PRECAUCION	1	1				

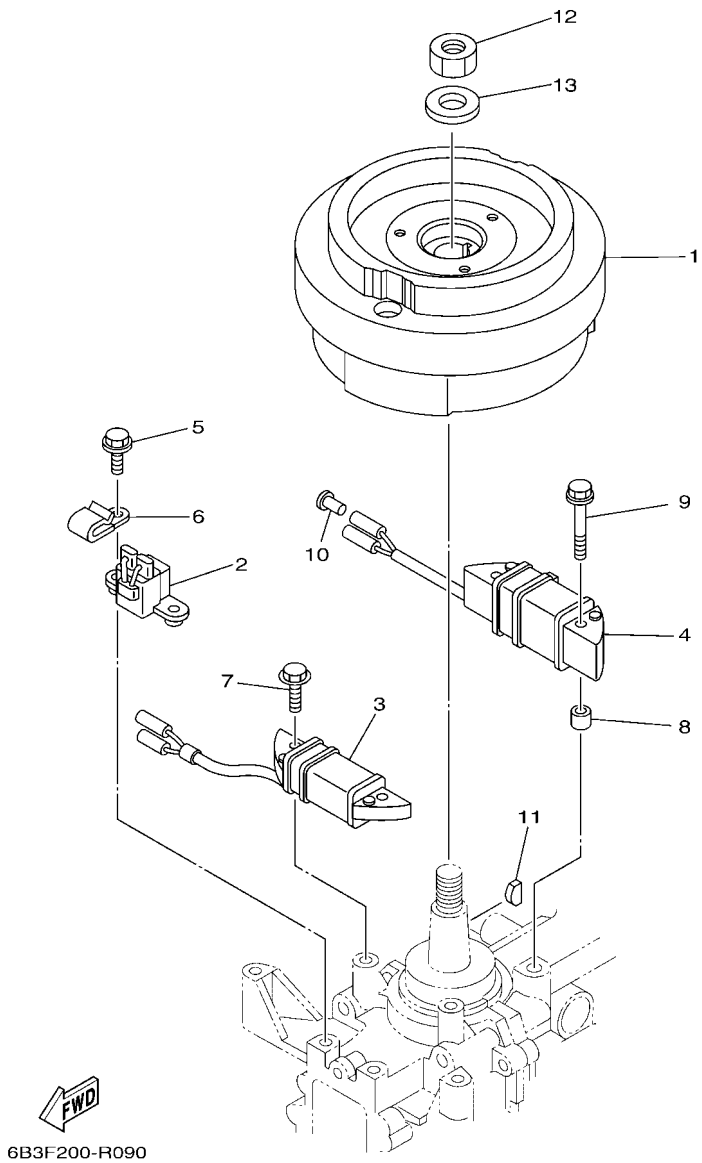

FIG. 9 GENERATOR GENERADOR

REF. NO.	PART NO. CODIGO Nº	DESCRIPTION DESCRIPCION	6B3P	6B4P				REMARKS OBSERVACIONES
1	6B4–85550–01	ROTOR ASSY ROTOR COMPLETO	1	1				UR FOR STD UR FOR STD
	6B4–85550–10	ROTOR ASSY ROTOR COMPLETO	1	1				UR WITH L/COIL UR WITH L/COIL
2	6B4–85580–02	COIL, PULSER BOBINA DE PULSACION	1	1				
3	6B4–85520–01	COIL, CHARGE BOBINA DE CARGA	1	1				
4	63V–85533–01	COIL, LIGHTING BOBINA DE LUZ	1	1				AFR,MEX,MAR,SEN,IND AFR,MEX,MAR,SEN,IND
5	90119–06023	BOLT, WITH WASHER TORNILLO CON ARANDELA	2	2				
6	90465–06M90	CLAMP BRIDA	1	1				
7	97E95–06520	BOLT, HEXAGON W/W DEEP RECESS TORNILLO HEXAGONAL CON RONDONA	2	2				
8	90387–06M24	COLLAR ESPACIADOR	2	2				AFR,MEX,MAR,SEN,IND AFR,MEX,MAR,SEN,IND
9	90119–06302	BOLT, WITH WASHER TORNILLO CON ARANDELA	2	2				AFR,MEX,MAR,SEN,IND AFR,MEX,MAR,SEN,IND
10	703–82119–01	COVER, LEAD WIRE CUBIERTA DE CABLE CONDUCTOR	2	2				AFR,MEX,MAR,SEN,IND AFR,MEX,MAR,SEN,IND
11	90280–05013	KEY, WOODRUFF CUNA WOODRUFF	1	1				
12	90170–12066	NUT TUERCA	1	1				
13	90201–12472	WASHER, PLATE ARANDELA PLANA	1	1				

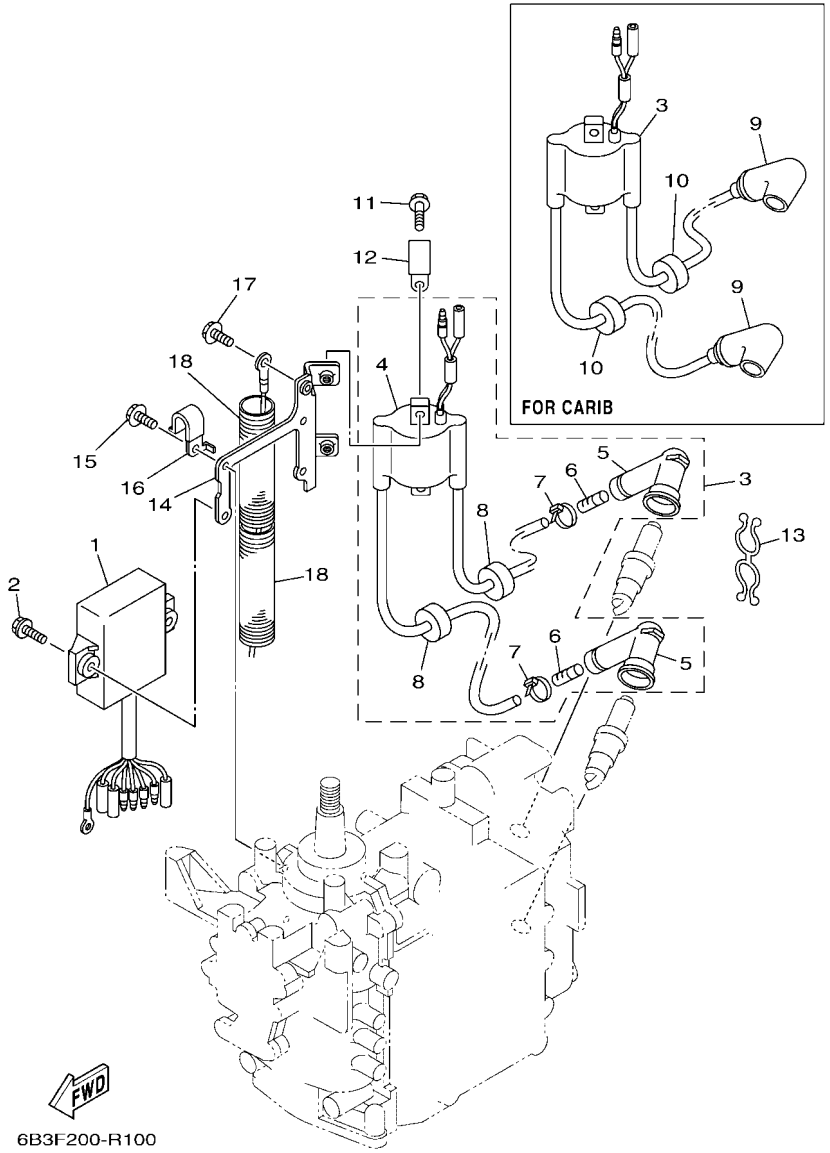

FIG. 10 ELECTRICAL ELECTRICO

REF. NO.	PART NO. CODIGO Nº	DESCRIPTION DESCRIPCION	6B3P	6B4P				REMARKS OBSERVACIONES
1	6B4–85540–06	C.D.I. UNIT ASSY UNIDAD C.D.I. COMPLETA	1	1				
2	90119–06312	BOLT, WITH WASHER TORNILLO CON ARANDELA	2	2				
3	6B4–85530–10	IGNITION COIL ASSY BOBINA DE IGNICION COMPLETO	1	1				
	6B4–85570–10	IGNITION COIL ASSY BOBINA DE IGNICION COMPLETO	1	1				FOR CAR FOR CAR
4	6B4–85570–10	.IGNITION COIL ASSY .BOBINA DE IGNICION COMPLETO	1	1				FOR 6B4-85530-10 FOR 6B4-85530-10
5	62E–82371–11	.CAP, PLUG .TAPON DE BUJIA COMPLT	2	2				FOR 6B4-85530-10 FOR 6B4-85530-10
6	62E–8231X–00	.TERMINAL 1 .TERMINAL 1	2	2				FOR 6B4-85530-10 FOR 6B4-85530-10
7	90465–11M10	.CLAMP .BRIDA	2	2				FOR 6B4-85530-10 FOR 6B4-85530-10
8	90480–25161	.GROMMET .TAPON	2	2				FOR 6B4-85530-10 FOR 6B4-85530-10
9	6E3–82370–21	PLUG CAP ASSY TAPON DE BUJIA COMPLT	2	2				FOR CAR FOR CAR
10	90480–25161	GROMMET TAPON	2	2				FOR CAR FOR CAR
11	97E95–06516	BOLT, HEXAGON W/W DEEP RECESS TORNILLO HEXAGONAL CON RONDONA	2	2				
12	90465–06M90	CLAMP BRIDA	1	1				
13	90464–08M02	CLAMP BRIDA	1	1				
14	6B4–82316–00	BRACKET, IGNITION COIL SOPORTE BOBINA ENCENDIDO	1	1				
15	97E95–06514	BOLT, HEXAGON W/W DEEP RECESS TORNILLO HEXAGONAL CON RONDONA	2	2				
16	90465–08M99	CLAMP BRIDA	1	1				
17	97E95–06512	BOLT, HEXAGON W/W DEEP RECESS TORNILLO HEXAGONAL CON RONDONA	1	1				
18	6N7–83557–00	TUBE (I.DIA:22MM) ENCHUFE DE ACEITE (I.DIA:22MM)	2	2				

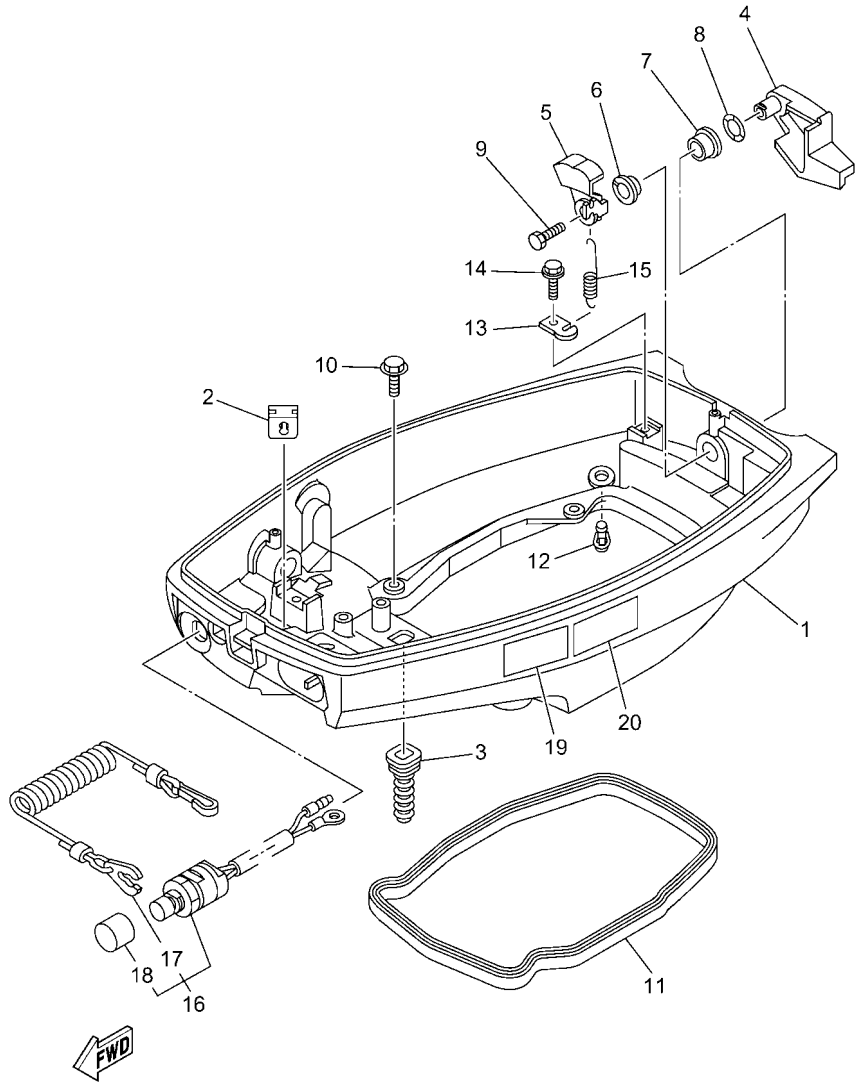

6B3P200-Y110

FIG. 11 BOTTOM COWLING — CUBIERTA INFERIOR

REF. NO.	PART NO. CODIGO Nº	DESCRIPTION DESCRIPCION	6B3P	6B4P				REMARKS OBSERVACIONES
1	6B4–42711–00–8D	COWLING, BOTTOM 1 CUBIERTA INFERIOR 1	1	1				
2	61N–26326–01	GROMMET TAPON PROTECTOR	1	1				
3	6B4–42727–01	GROMMET TAPON	1	1				
4	6B4–42815–00–8D	LEVER, CLAMP 1 PALANCA ABRAZADERA 1	1	1				
5	6B4–42816–00	LEVER, CLAMP 2 PALANCA ABRAZADERA 2	1	1				
6	90386–12M45	BUSH BUJE	1	1				
7	90386–12MA2	BUSH BUJE	1	1				
8	90206–12052	WASHER, WAVE ARANDELA ONDULADA	1	1				
9	97D95–06014	BOLT, HEXAGON DEEP RECESS TORNILLO HEXAGONAL	1	1				
10	97E95–06516	BOLT, HEXAGON W/W DEEP RECESS TORNILLO HEXAGONAL CON RONDONA	4	4				
11	6B4–42716–01	RUBBER SEAL 1 SELLO DE GOMA 1	1	1				
12	6BL–44391–00	NIPPLE, HOSE NIPLE MANGUERA	1	1				
13	66T–43144–00	HOOK, SPRING GANCHO	1	1				
14	90109–06M80	BOLT PERNO	1	1				
15	90506–18009	SPRING, TENSION RESORTE DE TENSION	1	1				
16	689–82575–04	ENGINE STOP SWITCH ASSY INTERRUPTOR DE PARADA COMPL	1	1				
17	682–82556–00	.LANYARD, STOP SWITCH .CORDON DE INTERRUPTOR PARADA	1	1				
18	689–8257Y–00	.CAP .TAPA	1	1				
19	6EE–42794–40	LABEL, WARNING (GENERAL) ETIQUETA DE PRECAUCION	1	1				
20	6EE–42794–50	LABEL, WARNING (GENERAL) ETIQUETA DE PRECAUCION	1	1				

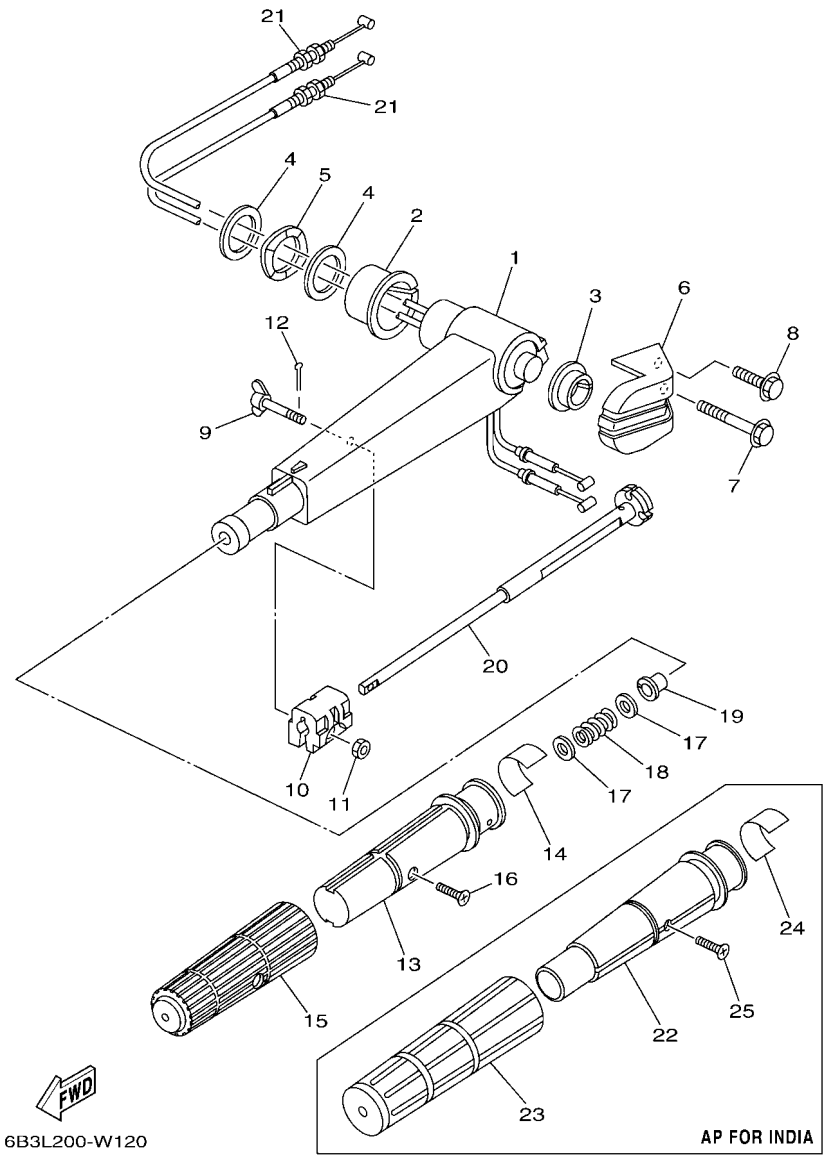

6B3L200-W120

FIG. 12 STEERING — DIRECCION

REF. NO.	PART NO. CODIGO Nº	DESCRIPTION DESCRIPCION	6B3P	6B4P				REMARKS OBSERVACIONES
1	6B4–42111–00–8D	HANDLE, STEERING MANIJA DE DIRECCION	1	1				
2	90381–35001	BUSH, SOLID BUJE SOLIDO	1	1				
3	90381–20001	BUSH, SOLID BUJE SOLIDO	1	1				
4	90201–28013	WASHER, PLATE ARANDELA PLANA	2	2				
5	90206–28001	WASHER, WAVE ARANDELA ONDULADA	1	1				
6	6B4–42131–00–8D	COVER, HANDLE STEERING CUBIERTA MANIJA DIRRECCION	1	1				
7	97E95–08555	BOLT, HEXAGON W/W DEEP RECESS TORNILLO HEXAGONAL CON RONDONA	1	1				
8	97E95–08530	BOLT, HEXAGON W/W DEEP RECESS TORNILLO HEXAGONAL CON RONDONA	1	1				
9	6B4–42125–00	BOLT, FRICTION ADJUSTING TORNILLO FRICCION ADJUSTA	1	1				
10	6B4–42126–00	FRICTION, STEERING HANDLE GRIP FRICCION DE MANGO DIRECCION	1	1				
11	95380–06600	NUT, HEXAGON TUERCA	1	1				
12	91490–16010	PIN. COTTER CHAVETA	1	1				
13	6B4–42119–00	GRIP, STEERING HANDLE MANGO, MANIJA DE DIRRECCION	1	1				
14	6F5–42137–20	INDICATOR, THROTTLE INDICADOR ACELERADOR	1	1				
15	6G1–42177–01	RUBBER, HANDLE HULE DE MANIJA	1	1				
16	90152–05011	SCREW, COUNTERSUNK TORNILLO EMBUTIDO	1	1				
17	90201–10M02	WASHER, PLATE ARANDELA PLANA	2	2				
18	90501–23215	SPRING, COMPRESSION RESORTE DE COMPRESION	1	1				
19	90386–08032	BUSH BUJE	1	1				
20	6B4–42138–00	LEVER, THROTTLE PLANCA DE ACELERACION	1	1				
21	6B4–26301–00	THROTTLE CABLE ASSY CABLE DE ACELERADOR COMPLETO	2	2				
22	6B4–42119–10	GRIP, STEERING HANDLE MANGO, MANIJA DE DIRRECCION	1					AP FOR IND AP FOR IND
23	67D–42177–01	RUBBER, HANDLE HULE DE MANIJA	1					AP FOR IND AP FOR IND
24	6F5–42137–20	INDICATOR, THROTTLE INDICADOR ACELERADOR	1					AP FOR IND AP FOR IND
25	90152–05011	SCREW, COUNTERSUNK TORNILLO EMBUTIDO	1					AP FOR IND AP FOR IND

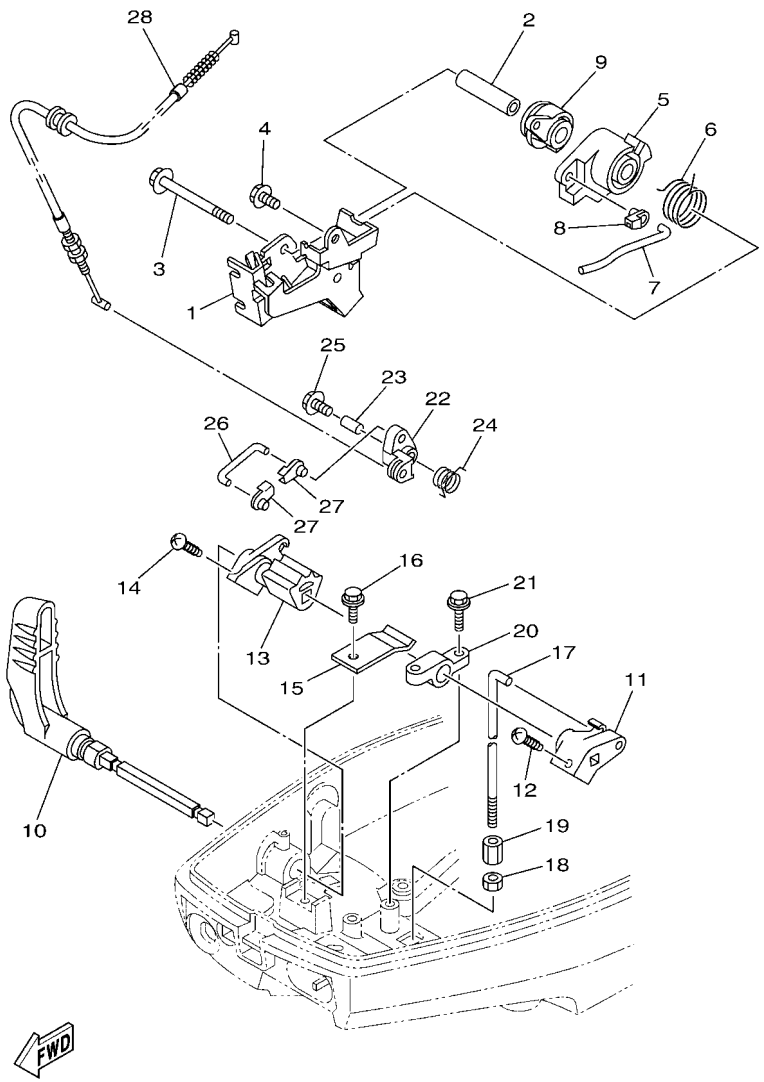

6B3F200-R130

FIG. 13 CONTROL

CONTROL

REF. NO.	PART NO. CODIGO Nº	DESCRIPTION DESCRIPCION	6B3P	6B4P				REMARKS OBSERVACIONES
1	63V–14497–02	STAY, THROTTLE WIRE SOPORTE VALVULA DE OBTURACION	1	1				
2	90387–06M50	COLLAR ESPACIADOR	1	1				
3	95D95–06065	BOLT, FLANGE DEEP RECESS CERROJO, REBORDE HUECO PROFUND	1	1				
4	97E95–06512	BOLT, HEXAGON W/W DEEP RECESS TORNILLO HEXAGONAL CON RONDONA	1	1				
5	6B4–41283–00	LEVER, FREE ACCEL. PALANCA	1	1				
6	90508–20M38	SPRING, TORSION RESORTE DE TORSION	1	1				
7	63V–41211–00	LINK, ACCEL. ESLABON, ACELERADOR	1	1				
8	6J8–41262–00	JOINT, CHOKE LEVER CONECTOR DE AHOGADOR	1	1				
9	6B4–41638–00	PULLEY POLEA	1	1				
10	6B4–44111–01–8D	HANDLE, GEAR SHIFT MANIJA DE CAMBIO DE MARCHAS	1	1				
11	6B4–44121–00	LEVER, SHIFT ROD PALANCA VARILLA CAMBIOS	1	1				
12	97780–40520	SCREW, TAPPING TORNILLO DE CABEZA DE CONO ACH	1	1				
13	6B4–44125–00	LEVER, SHIFT ROD PALANCA VARILLA CAMBIOS	1	1				
14	97780–40520	SCREW, TAPPING TORNILLO DE CABEZA DE CONO ACH	1	1				
15	6B4–44116–00	SPRING RESORTE	1	1				
16	90109–06M80	BOLT PERNO	1	1				
17	6B4–44143–00	ROD, SHIFT 1 VARILLA DE CAMBIO 1	1	1				
18	95380–06700	NUT TUERCA	1	1				
19	61N–44146–00	CONNECTOR, SHIFT ROD 2 CONECTOR VARILLA DE CAMBIO 2	1	1				
20	6B4–41662–00	BRACKET 2 SOPORTE 2	1	1				
21	90109–06M81	BOLT PERNO	2	2				
22	6B4–15746–00	ARM BRAZO	1	1				
23	90387–06M06	COLLAR ESPACIADOR	1	1				
24	90508–08M39	SPRING, TORSION RESORTE DE TORSION	1	1				
25	97E95–06520	BOLT, HEXAGON W/W DEEP RECESS TORNILLO HEXAGONAL CON RONDONA	1	1				
26	6L2–15747–00	LINK ESLABON	1	1				
27	6J8–41262–00	JOINT, CHOKE LEVER CONECTOR DE AHOGADOR	2	2				

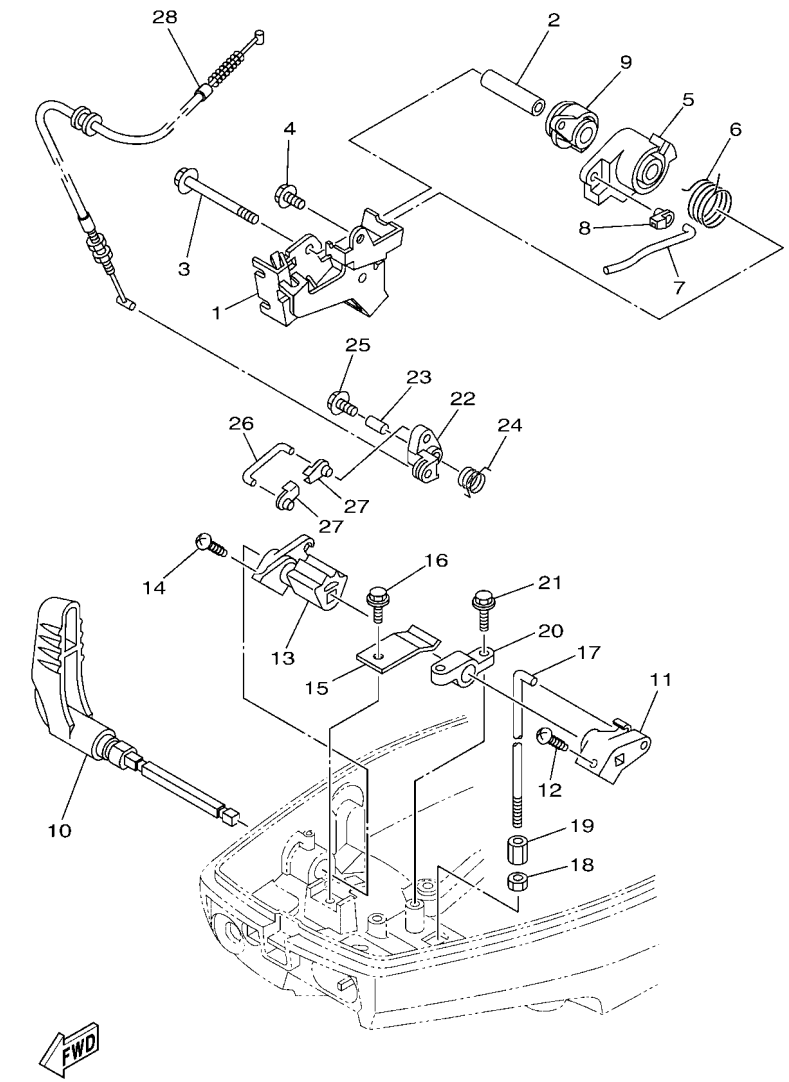

6B3F200-R130

FIG. 13 CONTROL — CONTROL

REF. NO.	PART NO. CODIGO Nº	DESCRIPTION DESCRIPCION	6B3P	6B4P				REMARKS OBSERVACIONES
28	6B4–15770–00	CABLE COMP., STARTER STOP CABLECOMPL DE SEGURO ARRANQUE	1	1				

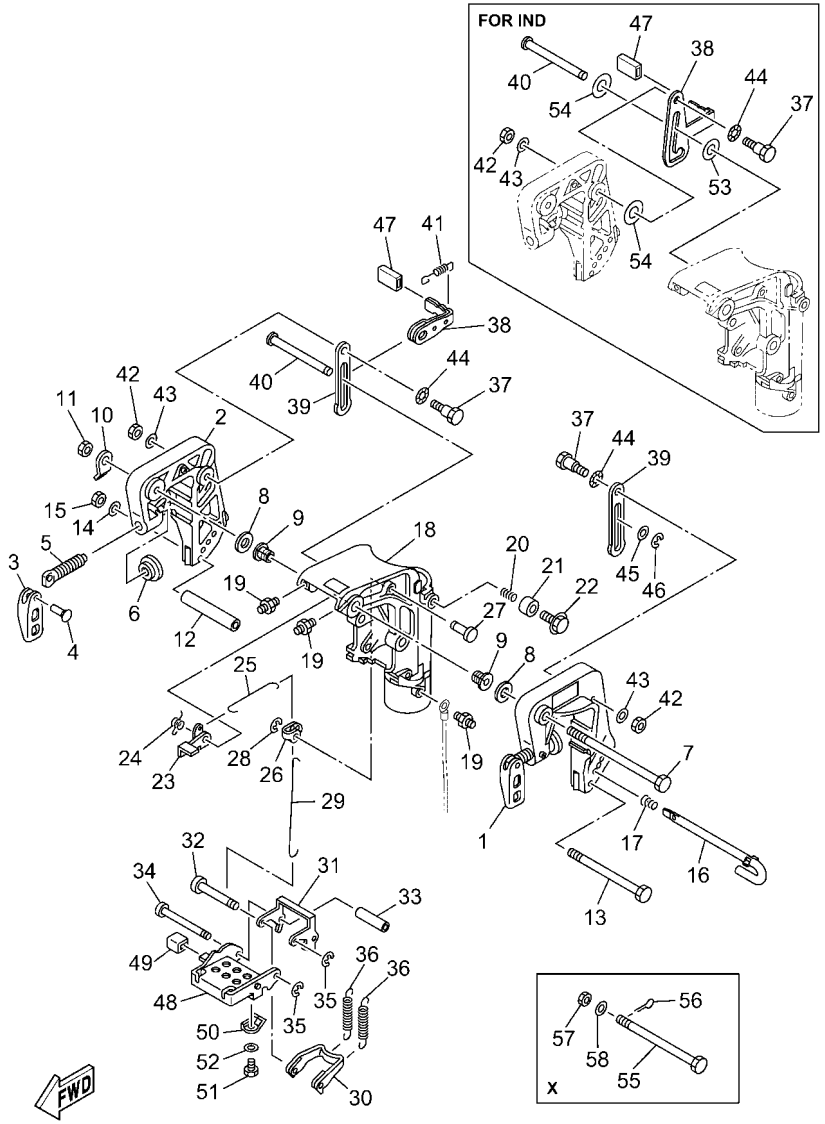

FIG. 14 BRACKET 1 — SOPORTE 1

REF. NO.	PART NO. CODIGO Nº	DESCRIPTION DESCRIPCION	6B3P	6B4P				REMARKS OBSERVACIONES
1	682–43111–05–8D	BRACKET, CLAMP 1 SOPORTE DE LA ABRAZADERA 1	1	1				
2	682–43112–05–8D	BRACKET, CLAMP 2 SOPORTE DE LA ABRAZADERA 2	1	1				
3	663–43118–01–8D	HANDLE, TRANSOM CLAMP MANIJA DE LA ABRAZADERA DEL ES	2	2				
4	90243–04007	PIN PASADOR	2	2				
5	6E7–43116–00	SCREW, TRANSOM CLAMP TORNILLO DE ABRAZADERA	2	2				
6	648–43114–01	PAD, TRANSOM CLAMP ARANDELA DE ABRAZADERA	2	2				
7	90101–12013	BOLT TORNILLO	1	1				
8	90201–12018	WASHER, PLATE ARANDELA PLANA	2	2				
9	90381–12001	BUSH, SOLID BUJE SOLIDO	2	2				
10	6B4–43113–00	PLATE, CLAMP BRACKET PLACA ABRAZADERA SOPORTE	1	1				
11	95780–12300	NUT, FLANGE TUERCA	1	1				
12	90387–06369	COLLAR ESPACIADOR	1	1				
13	90101–06M29	BOLT TORNILLO	1	1				
14	92995–06600	WASHER ARANDELA	1	1				
15	95380–06700	NUT TUERCA	1	1				
16	689–43160–00	TILT ROD ASSY VARILLA DE BASCULACION COMPL.	1	1				S(17.4"),L(22.4") S(17.4"),L(22.4")
17	90502–10M07	SPRING, CONICAL RESORTE CONICO	1	1				S(17.4"),L(22.4") S(17.4"),L(22.4")
18	682–43311–07–8D	BRACKET, SWIVEL 1 SOPORTE GIRATORIO 1	1	1				
19	93700–06004	NIPPLE, GREASE BOQUILLA DE ENGRASAR	3	3				
20	90501–18M00	SPRING, COMPRESSION RESORTE DE COMPRESION	1	1				
21	676–43373–01	SEAL, DAMPER SELLO DE GOMA	1	1				
22	97E75–08525	BOLT, HEXAGON W/W DEEP RECESS TORNILLO HEXAGONAL CON RONDONA	1	1				
23	6B4–43631–01	LEVER, TILT PALANCA DE INCLINACION	1	1				
24	90508–14018	SPRING, TORSION RESORTE DE TORSION	1	1				
25	682–43616–00	ROD, TILT LOCK VARILLA SEGURO DE INCLINACION	1	1				
26	682–43641–01	LEVER, TILT PALANCA DE INCLINACION	1	1				
27	90249–06M23	PIN PASADOR	1	1				

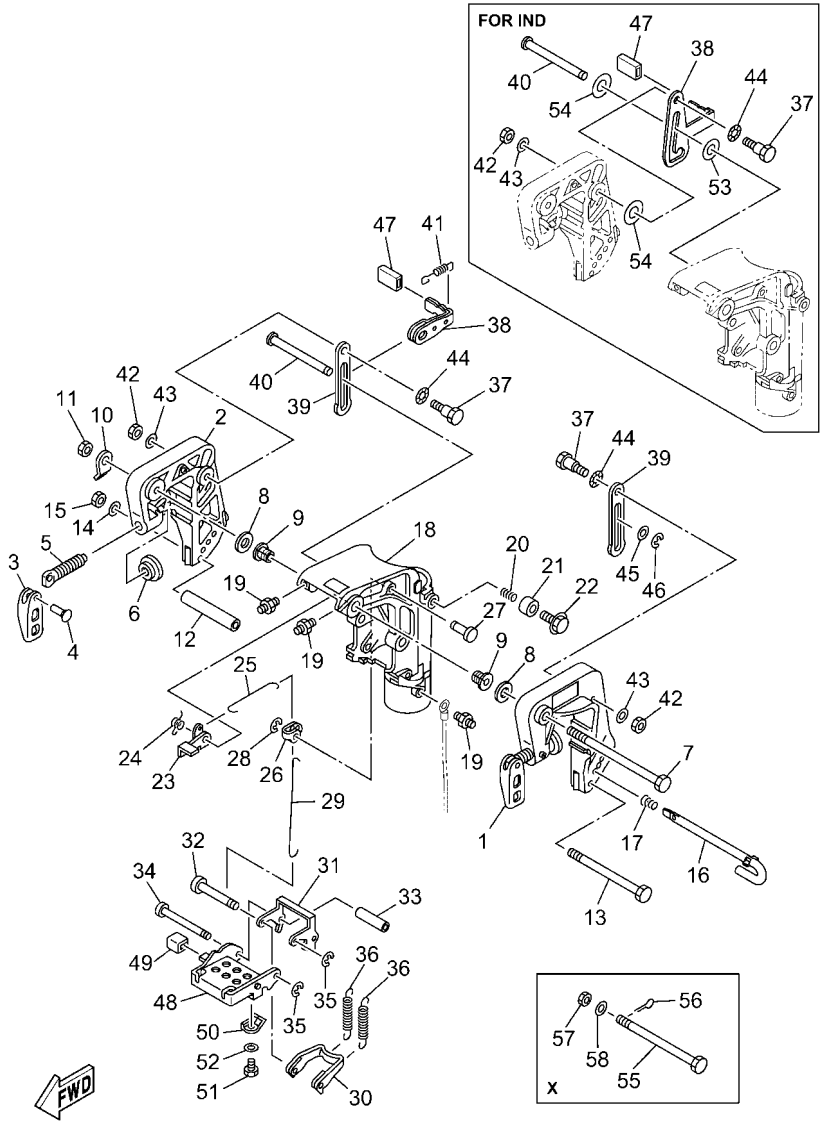

6B3P200-Y140

FIG. 14 BRACKET 1 SOPORTE 1

REF. NO.	PART NO. CODIGO Nº	DESCRIPTION DESCRIPCION	6B3P	6B4P				REMARKS OBSERVACIONES
28	99080–05600	CIRCLIP PRESILLA REDONDA	1	1				
29	682–43617–00	ROD, TILT LOCK VARILLA SEGURO DE INCLINACION	1	1				
30	682–43614–01	PLATE, TILT LOCK PLACA DE SEGURO DE INCLINACION	1	1				
31	682–43615–02	PLATE, TILT LOCK PLACA DE SEGURO DE INCLINACION	1	1				
32	682–43611–01	SHAFT, TILT LOCK EJE SEGURO INCLINACION	1	1				
33	90387–06M20	COLLAR ESPACIADOR	1	1				
34	682–43659–01	SHAFT, REVERSE LOCK EJE SEGURO DE REVERSA	1	1				
35	99080–05600	CIRCLIP PRESILLA REDONDA	2	2				
36	90506–26M01	SPRING, TENSION RESORTE DE TENSION	2	2				S(17.4"),L(22.4") S(17.4"),L(22.4")
	90506–26M07	SPRING, TENSION RESORTE DE TENSION		2				X(28.0") X(28.0")
37	90109–06M05	BOLT PERNO	2	2				
38	6B4–43181–00	LEVER, TILT STOP 1 PALANCA TOPE INCLINACION 1	1	1				EXCEPT FOR IND EXCEPT FOR IND
	6B4–43181–10	LEVER, TILT STOP 1 PALANCA TOPE INCLINACION 1	1					FOR IND FOR IND
39	6B4–43627–00	STOPPER RETEN	2	2				EXCEPT FOR IND EXCEPT FOR IND
	6B4–43627–00	STOPPER RETEN	1					FOR IND FOR IND
40	90249–10003	PIN PASADOR	1	1				
41	90506–12002	SPRING, TENSION RESORTE DE TENSION	1	1				EXCEPT FOR IND EXCEPT FOR IND
42	95680–06100	NUT, U TUERCA U	2	2				
43	92990–06600	WASHER, PLATE ARANDELA PLANA	2	2				
44	90206–10M24	WASHER, WAVE ARANDELA ONDULADA	2	2				
45	90202–10M56	WASHER, PLATE ARANDELA DE PLANA	1	1				
46	99080–09600	CIRCLIP PRESILLA REDONDA	1	1				
47	682–43318–01	COVER CUBIERTA	1	1				
48	6B4–43681–10	LEVER, SHALLOW WATER DRIVE 1 PALANCA 1	1	1				
49	682–43318–01	COVER CUBIERTA	1	1				
50	682–43643–00	SPRING RESORTE	1	1				
51	97D95–06008	BOLT, HEXAGON DEEP RECESS TORNILLO HEXAGONAL	1	1				

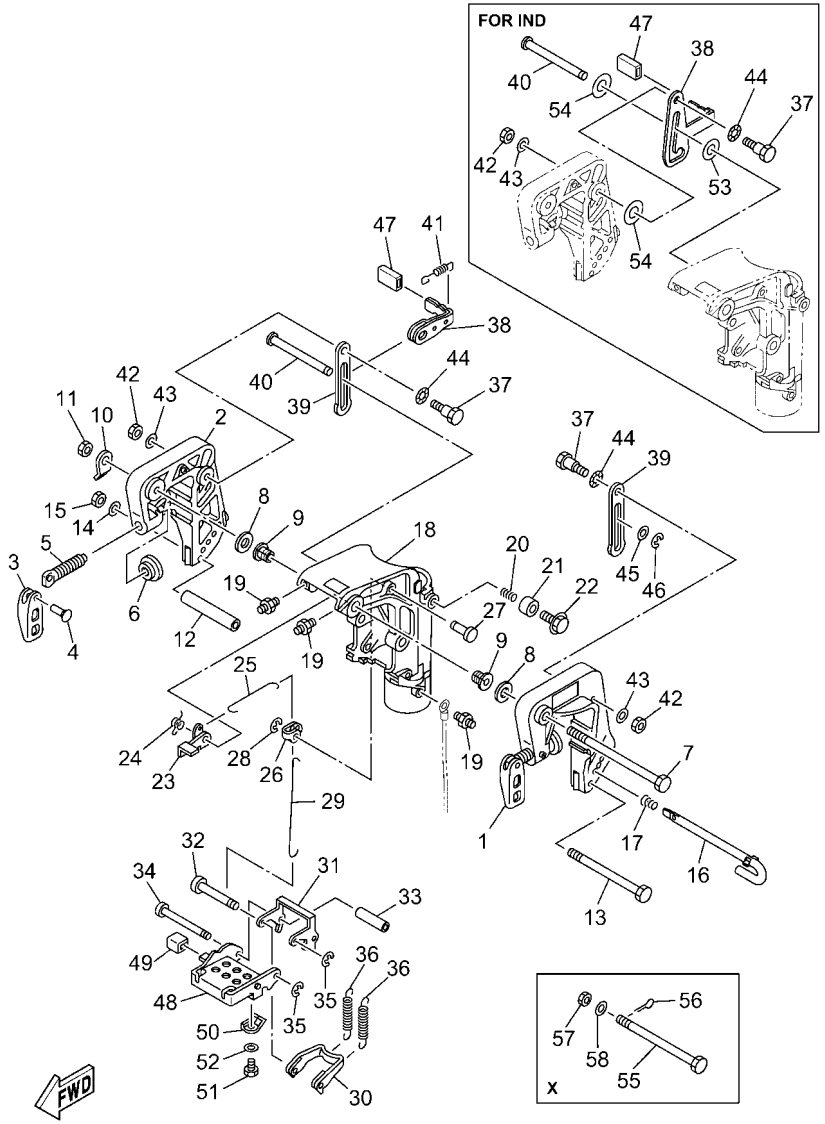

FIG. 14 BRACKET 1 SOPORTE 1

REF. NO.	PART NO. CODIGO Nº	DESCRIPTION DESCRIPCION	6B3P	6B4P				REMARKS OBSERVACIONES
52	92990–06600	WASHER, PLATE ARANDELA PLANA	1	1				
53	90201–106M5	WASHER, PLATE ARANDELA PLANA	1					FOR IND FOR IND
54	90201–10M76	WASHER, PLATE ARANDELA PLANA	2					FOR IND FOR IND
55	90102–08M01	BOLT, WITH HOLE PERNO CON ORIFICIO		1				X(28.0") X(28.0")
56	91490–20015	PIN. COTTER CHAVETA		1				X(28.0") X(28.0")
57	90171–08M00	NUT, CASTLE TUERCA ENTALLADA		1				X(28.0") X(28.0")
58	92990–08600	WASHER, PLATE ARANDELA PLANA		1				X(28.0") X(28.0")

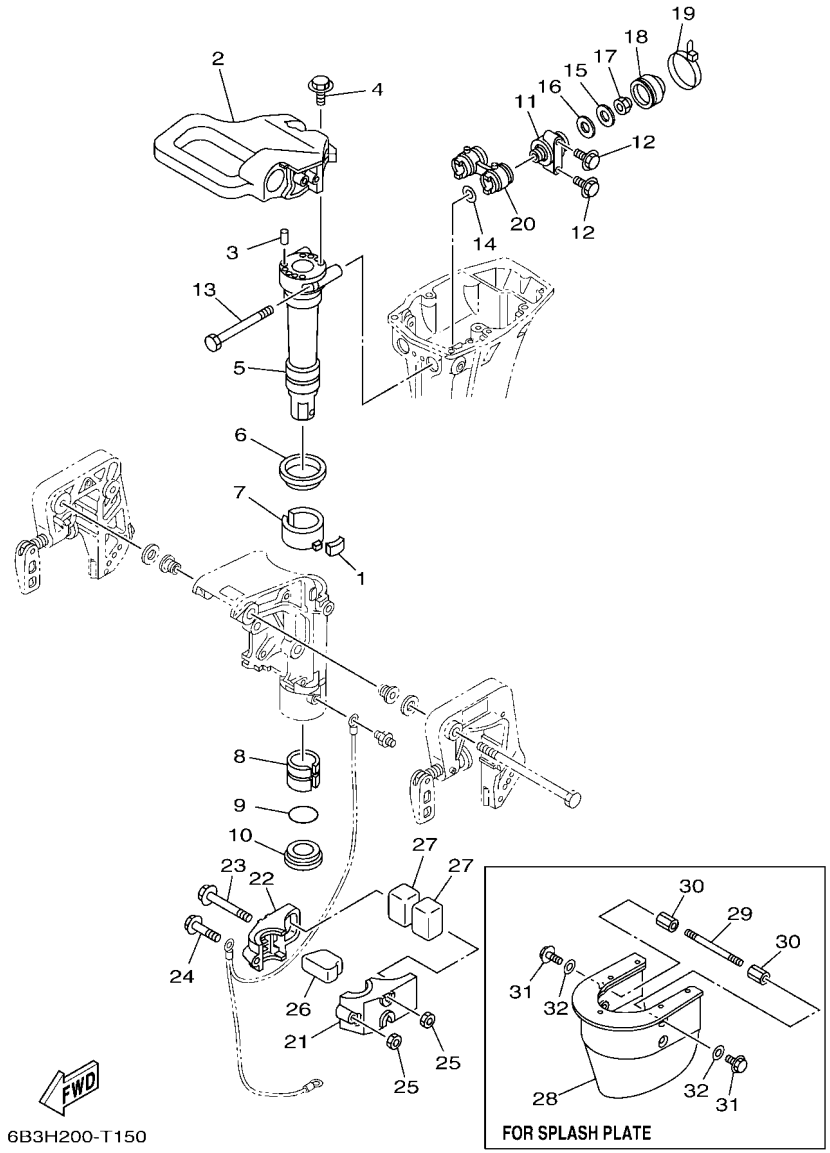

FIG. 15 BRACKET 2 — SOPORTE 2

REF. NO.	PART NO. CODIGO Nº	DESCRIPTION DESCRIPCION	6B3P	6B4P				REMARKS OBSERVACIONES
1	648–42528–01	PLATE, FRICTION PIEZA DE FRICCION	1	1				
2	6B4–42511–00–8D	BRACKET, STEERING SOPORTE DE DIRECCION	1	1				
3	93606–12019	PIN, DOWEL PASADOR DE CLAVIJA	2	2				
4	97E95–06525	BOLT, HEXAGON W/W DEEP RECESS TORNILLO HEXAGONAL CON RONDONA	3	3				
5	682–42521–00	SHAFT, STEERING PIVOT EJE PIVOTE DE DIRECCION	1	1				
6	90209–52M01	WASHER ARANDELA DE SEPARACION	1	1				
7	682–42537–01	BUSHING, PIVOT SHAFT BUJE DEL PIVOTE DE LA FLECHA	1	1				
8	90386–40M09	BUSH BUJE	1	1				
9	93210–40M10	O-RING ANILLO O	1	1				
10	90386–40M08	BUSH BUJE	1	1				
11	682–44514–01–CA	MOUNT DAMPER, UPPER SIDE AMORTIGUADOR LADO SUPERIOR	2	2				S(17.4"),L(22.4") S(17.4"),L(22.4")
	682–44514–31–CA	MOUNT DAMPER, UPPER SIDE AMORTIGUADOR LADO SUPERIOR		2				X(28.0") X(28.0")
12	97E95–06525	BOLT, HEXAGON W/W DEEP RECESS TORNILLO HEXAGONAL CON RONDONA	4	4				
13	90101–08M30	BOLT TORNILLO	2	2				
14	90201–08M12	WASHER, PLATE ARANDELA PLANA	2	2				
15	90201–08M13	WASHER, PLATE ARANDELA PLANA	2	2				
16	90202–13M02	WASHER, PLATE ARANDELA DE PLANA	2	2				
17	90185–08057	NUT, SELF-LOCKING TUERCA AUTOBLOCANTE	2	2				
18	682–44522–01	SEAL SELLO DE GOMA	2	2				
19	90465–11M52	CLAMP BRIDA	2	2				
20	682–44521–02	SEAL SELLO DE GOMA	1	1				
21	682–44551–02–8D	HOUSING, LOWER MOUNT RUBBER 1 CAJA AMORTIGUADOR INFERIOR HU	1	1				
22	682–44552–02–8D	HOUSING, LOWER MOUNT RUBBER 2 CAJA AMORTIGUADOR INFERIOR HU	1	1				
23	90119–08204	BOLT, WITH WASHER TORNILLO CON ARANDELA	2	2				EXCEPT SPLASH PLATE EXCEPT SPLASH PLATE
24	97E75–08555	BOLT, HEXAGON W/W DEEP RECESS TORNILLO HEXAGONAL CON RONDONA	1	1				
25	95380–08700	NUT TUERCA	3	3				EXCEPT SPLASH PLATE EXCEPT SPLASH PLATE
	95380–08700	NUT TUERCA		1				FOR SPLASH PLATE FOR SPLASH PLATE

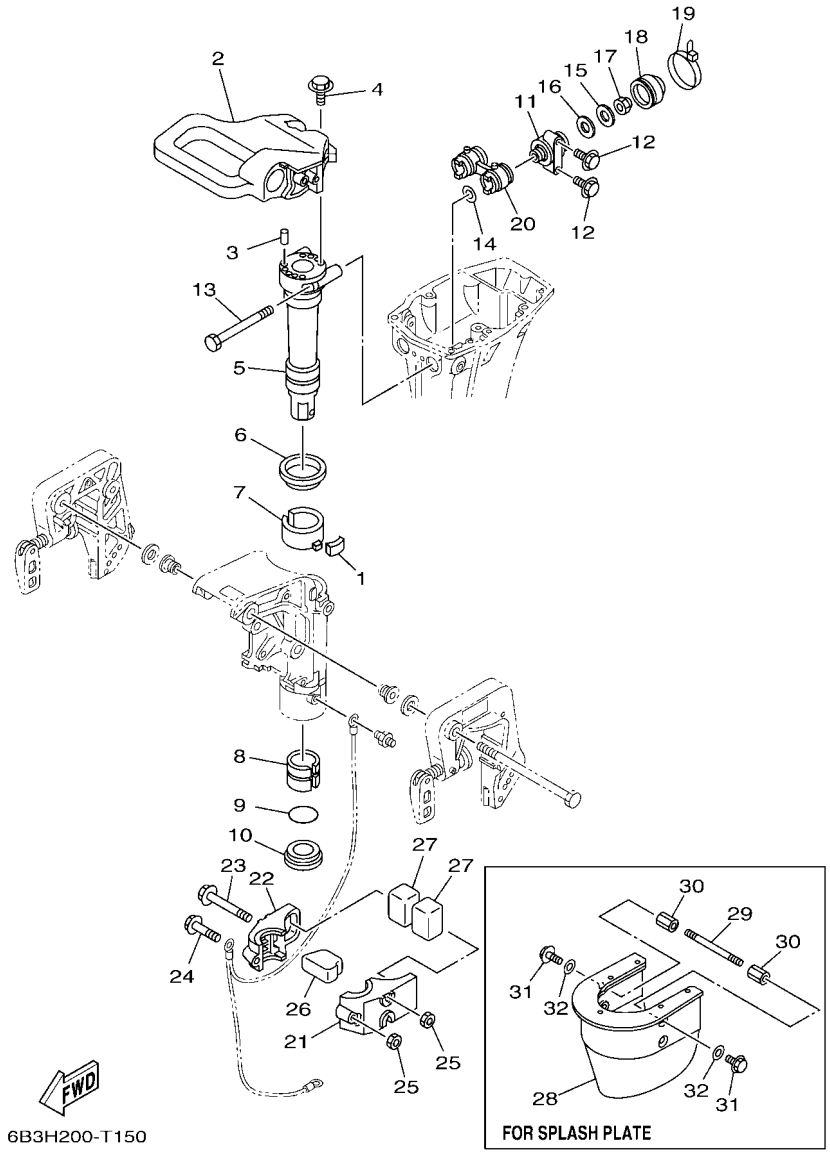

FIG. 15 BRACKET 2 SOPORTE 2

REF. NO.	PART NO. CODIGO Nº	DESCRIPTION DESCRIPCION	6B3P	6B4P				REMARKS OBSERVACIONES
26	682–44557–00	MOUNT DAMPER, LOWER FRONT AMORTIGUADOR DE HULE FRENTE IN	1	1				
27	682–44555–30	MOUNT DAMPER, LOWER SIDE AMORTIGUADOR DE HULE LADO INFE	2	2				S(17.4") S(17.4")
	6B4–44555–30	MOUNT DAMPER, LOWER SIDE AMORTIGUADOR DE HULE LADO INFE	2	2				L(22.4"),X(28.0") L(22.4"),X(28.0")
28	6B4–45151–00–8D	COVER, UPPER CASING CUBIERTA FUNDA SUPERIOR		1				FOR SPLASH PLATE FOR SPLASH PLATE
29	90116–08013	BOLT, STUD ESPARRAGO		2				FOR SPLASH PLATE FOR SPLASH PLATE
30	90170–08009	NUT TUERCA		4				FOR SPLASH PLATE FOR SPLASH PLATE
31	97E95–08412	BOLT, HEXAGON W/W DEEP RECESS TORNILLO HEXAGONAL CON RONDONA		4				FOR SPLASH PLATE FOR SPLASH PLATE
32	92990–08600	WASHER, PLATE ARANDELA PLANA		4				FOR SPLASH PLATE FOR SPLASH PLATE

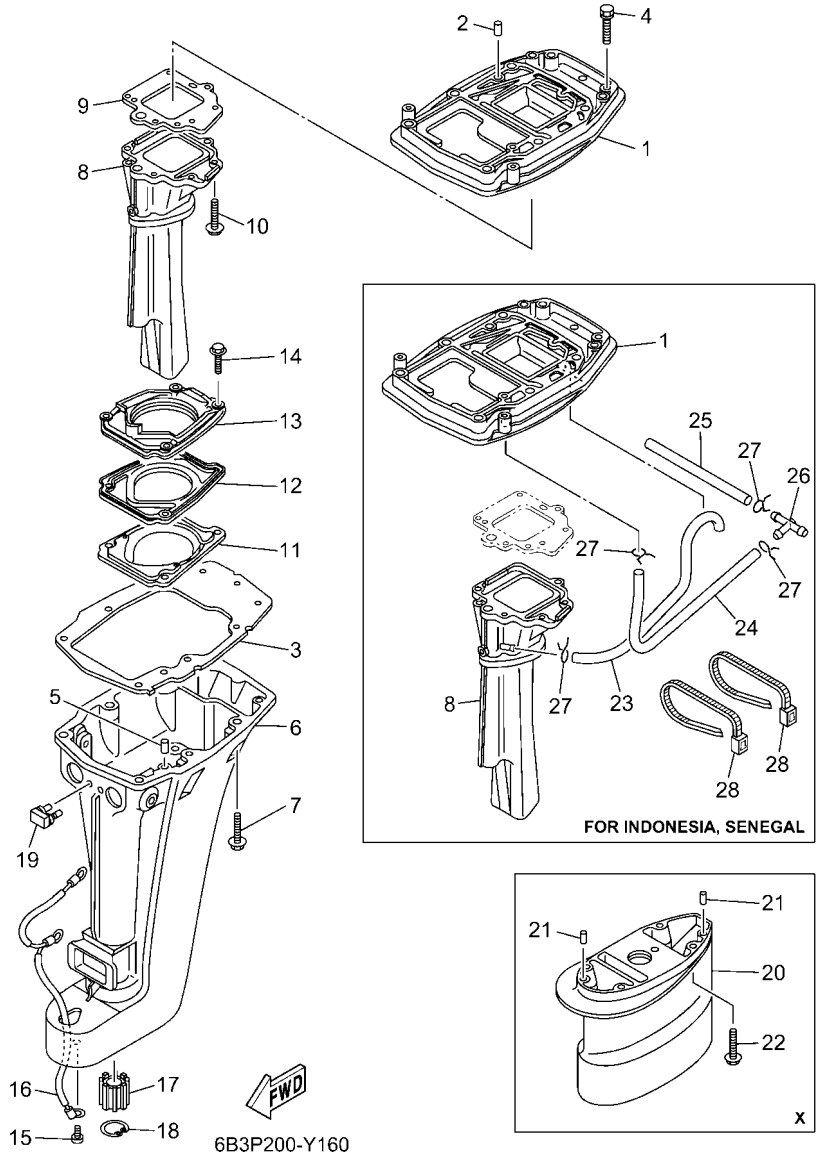

FIG. 16 UPPER CASING — FUNDA SUPERIOR

REF. NO.	PART NO. CODIGO Nº	DESCRIPTION DESCRIPCION	6B3P	6B4P				REMARKS OBSERVACIONES
1	6B4–41137–A0–CA	GUIDE, EXHAUST GUIA DE ESCAPE	1	1				
	6B4–41137–B0–CA	GUIDE, EXHAUST GUIA DE ESCAPE		1				FOR IDN,SEN FOR IDN,SEN
2	93606–12019	PIN, DOWEL PASADOR DE CLAVIJA	2	2				
3	682–45113–A3	GASKET, UPPER CASING EMPAQUE	1	1				
	6B4–45113–01	GASKET, UPPER CASING EMPAQUE		1				FOR IDN,SEN FOR IDN,SEN
4	90119–06MA4	BOLT, WITH WASHER TORNILLO CON ARANDELA	2	2				
5	93606–12019	PIN, DOWEL PASADOR DE CLAVIJA	2	2				
6	682–45111–05–8D	CASING, UPPER CAJA SUPERIOR	1	1				S(17.4") S(17.4")
	682–45111–15–8D	CASING, UPPER CAJA SUPERIOR	1	1				L(22.4"),X(28.0") L(22.4"),X(28.0")
7	97E75–08550	BOLT, HEXAGON W/W DEEP RECESS TORNILLO HEXAGONAL CON RONDONA	6	6				
8	6B4–41131–01–CA	MANIFOLD, EXT. 1 TUBO MULTIPLE DE ESCAPE	1	1				UR UR
	6B4–41131–11–CA	MANIFOLD, EXT. 1 TUBO MULTIPLE DE ESCAPE	1	1				UR ANTI-CORROSIVE UR ANTI-CORROSIVE
	6B4–41131–21–CA	MANIFOLD, EXT. 1 TUBO MULTIPLE DE ESCAPE		1				UR FOR IDN,SEN UR FOR IDN,SEN
9	682–41133–A0	GASKET, EXHAUST MANIFOLD 1 EMPAQUE ESCAPE MULTIPLE	1	1				
10	97E95–06520	BOLT, HEXAGON W/W DEEP RECESS TORNILLO HEXAGONAL CON RONDONA	6	6				
11	682–45126–01–CA	PLATE, SEAL DAMPER PLACA DE SELLO DE HULE	1	1				
12	682–45127–00	SEAL SELLO DE GOMA	1	1				
13	682–41116–00–CA	PROTECTOR PROTECTOR	1	1				S(17.4") S(17.4")
	6B4–41116–A0–CA	PROTECTOR PROTECTOR	1	1				L(22.4"),X(28.0") L(22.4"),X(28.0")
14	90105–06M01	BOLT, FLANGE TORNILLO	4	4				
15	90157–06M06	SCREW, PAN HEAD TORNILLO CABEZA CONICA PLANA	1	1				
16	6E7–82127–00	WIRE, LEAD 2 CABLE CONDUCTOR 2	1	1				
17	6B4–45318–00	BUSHING, DRIVE SHAFT BUJE, EJE DE MANDO	1	1				L(22.4"),X(28.0") L(22.4"),X(28.0")
18	93420–30042	CIRCLIP SEGURO	1	1				L(22.4"),X(28.0") L(22.4"),X(28.0")
19	682–44532–01	STOPPER, UPPER MOUNT RETEN	1	1				
20	682–45211–31–8D	EXTENSION EXTENSION		1				X(28.0") X(28.0")
21	93606–12019	PIN, DOWEL PASADOR DE CLAVIJA		2				X(28.0") X(28.0")

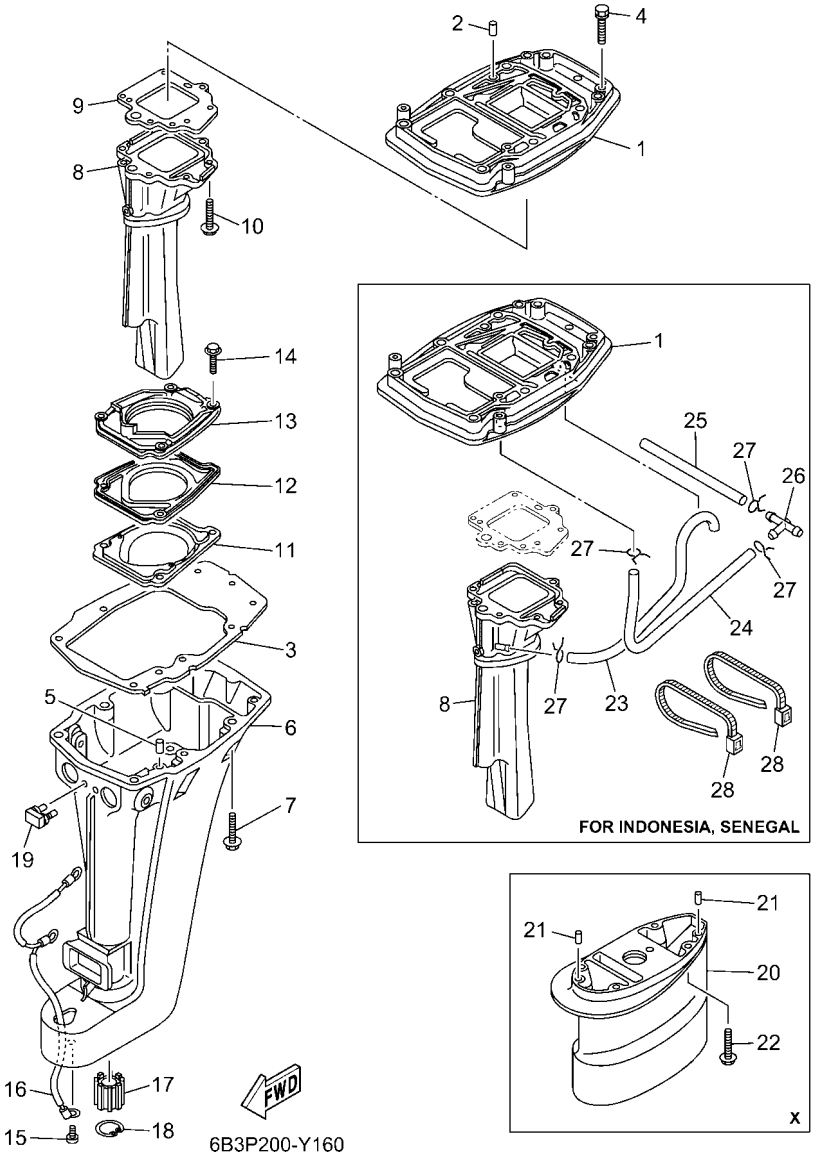

FIG. 16 UPPER CASING — FUNDA SUPERIOR

REF. NO.	PART NO. CODIGO Nº	DESCRIPTION DESCRIPCION	6B3P	6B4P				REMARKS OBSERVACIONES
22	97E75–08535	BOLT, HEXAGON W/W DEEP RECESS TORNILLO HEXAGONAL CON RONDONA		4				X(28.0") X(28.0")
23	6B4–45135–00	PIPE TUBO 1		1				FOR IDN,SEN FOR IDN,SEN
24	90445–07022	HOSE (L110) TUBO (L110)		1				FOR IDN,SEN FOR IDN,SEN
25	90445–07MA6	HOSE (L90) TUBO (L90)		1				FOR IDN,SEN FOR IDN,SEN
26	6E0–24378–00	PIPE, JOINT 3 TUBO DE UNION 3		1				FOR IDN,SEN FOR IDN,SEN
27	90467–06016	CLIP PRESILLA		4				FOR IDN,SEN FOR IDN,SEN
28	90465–13M36	CLAMP BRIDA		2				FOR IDN,SEN FOR IDN,SEN

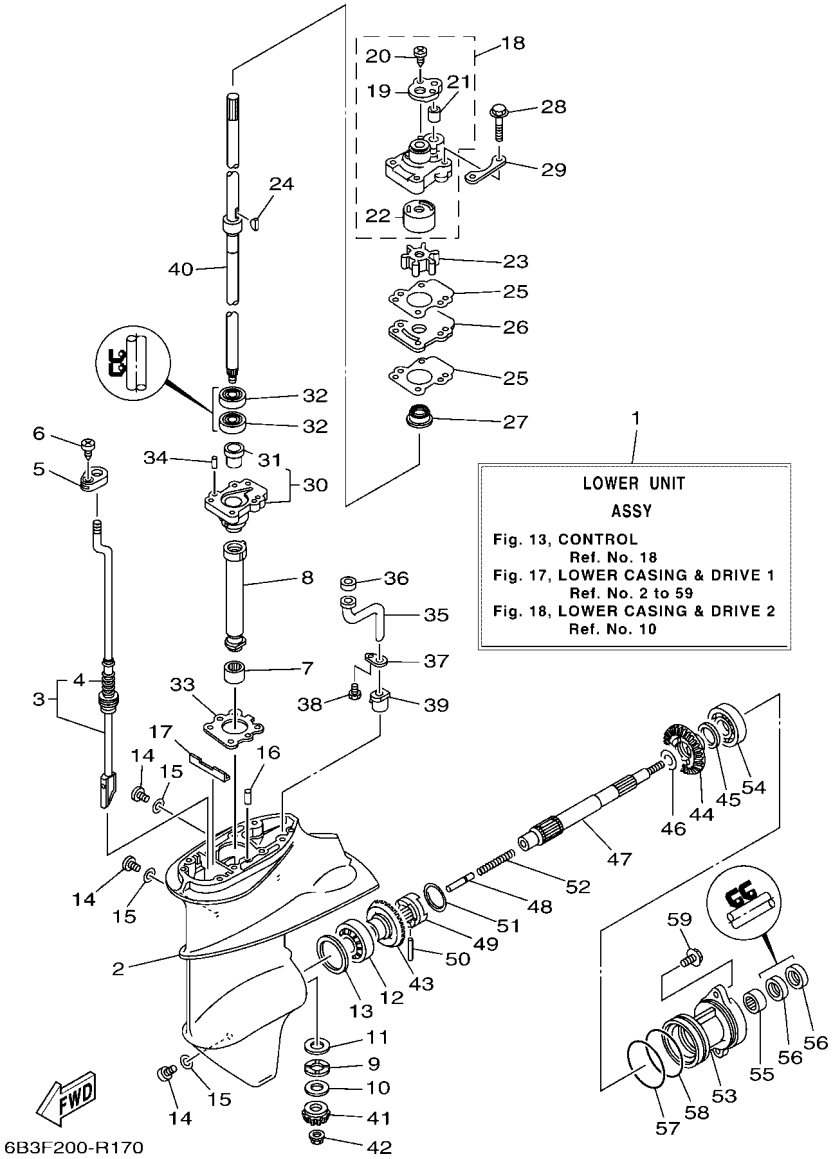

FIG. 17 LOWER CASING & DRIVE 1 — IMPULSOR E INFERIOR 1

REF. NO.	PART NO. CODIGO Nº	DESCRIPTION DESCRIPCION	6B3P	6B4P				REMARKS OBSERVACIONES
1	6B4–45300–03–8D	LOWER UNIT ASSY CONJUNTO UNIDAD INFERIOR	1	1				S(17.4") S(17.4")
	6B4–45300–13–8D	LOWER UNIT ASSY CONJUNTO UNIDAD INFERIOR	1	1				L(22.4") L(22.4")
	6B4–45300–33–8D	LOWER UNIT ASSY CONJUNTO UNIDAD INFERIOR		1				X(28.0") X(28.0")
2	6E8–45311–01–8D	CASING, LOWER FUNDA INFERIOR	1	1				
3	6B4–44150–00	SHIFT CAM ASSY CONJUNTO EJE LEVA COMPL.	1	1				S(17.4") S(17.4")
	6B4–44150–10	SHIFT CAM ASSY CONJUNTO EJE LEVA COMPL.	1	1				L(22.4") L(22.4")
	6B4–44150–30	SHIFT CAM ASSY CONJUNTO EJE LEVA COMPL.		1				X(28.0") X(28.0")
4	6B4–44147–00	.BOOT, SHIFT ROD .HULE DE VARILLA	1	1				
5	682–44176–00	BRACKET SOPORTE	1	1				
6	97780–50110	SCREW, TAPPING TORNILLO DE CABEZA DE CONO ACH	1	1				
7	93315–314V8	BEARING COJINETE DE RODILLOS	1	1				
8	6E7–45536–00	SLEEVE, DRIVE SHAFT CAMISA EJE DE MANDO	1	1				
9	90209–14011	WASHER ARANDELA DE SEPARACION	1	1				
10	6E8–45587–10	SHIM (T:1.13MM) LAINA (T:1.13MM)	1	1				UR UR
	6E8–45587–30	SHIM (T:1.20MM) LAINA (T:1.20MM)	1	1				UR UR
11	90201–15017	WASHER, PLATE ARANDELA PLANA	1	1				
12	93332–00005	BEARING COJINETE	1	1				
13	664–45567–01	SHIM (T:0.10MM) LAINA (T:0.10MM)	1	1				UR UR
	664–45567–10	SHIM (T:0.12MM) LAINA (T:0.12MM)	1	1				UR UR
	664–45567–20	SHIM (T:0.15MM) LAINA (T:0.15MM)	1	1				UR UR
	664–45567–30	SHIM (T:0.18MM) LAINA (T:0.18MM)	1	1				UR UR
	664–45567–40	SHIM (T:0.30MM) LAINA (T:0.30MM)	1	1				UR UR
	664–45567–50	SHIM (T:0.40MM) LAINA (T:0.40MM)	1	1				UR UR
	664–45567–60	SHIM (T:0.50MM) LAINA (T:0.50MM)	1	1				UR UR
14	90340–08002	PLUG, STRAIGHT SCREW TORNILLO, DE DRENAJE	3	3				
15	90430–08003	GASKET JUNTA	3	3				
16	93604–08062	PIN, DOWEL PASADOR DE CLAVIJA	1	1				

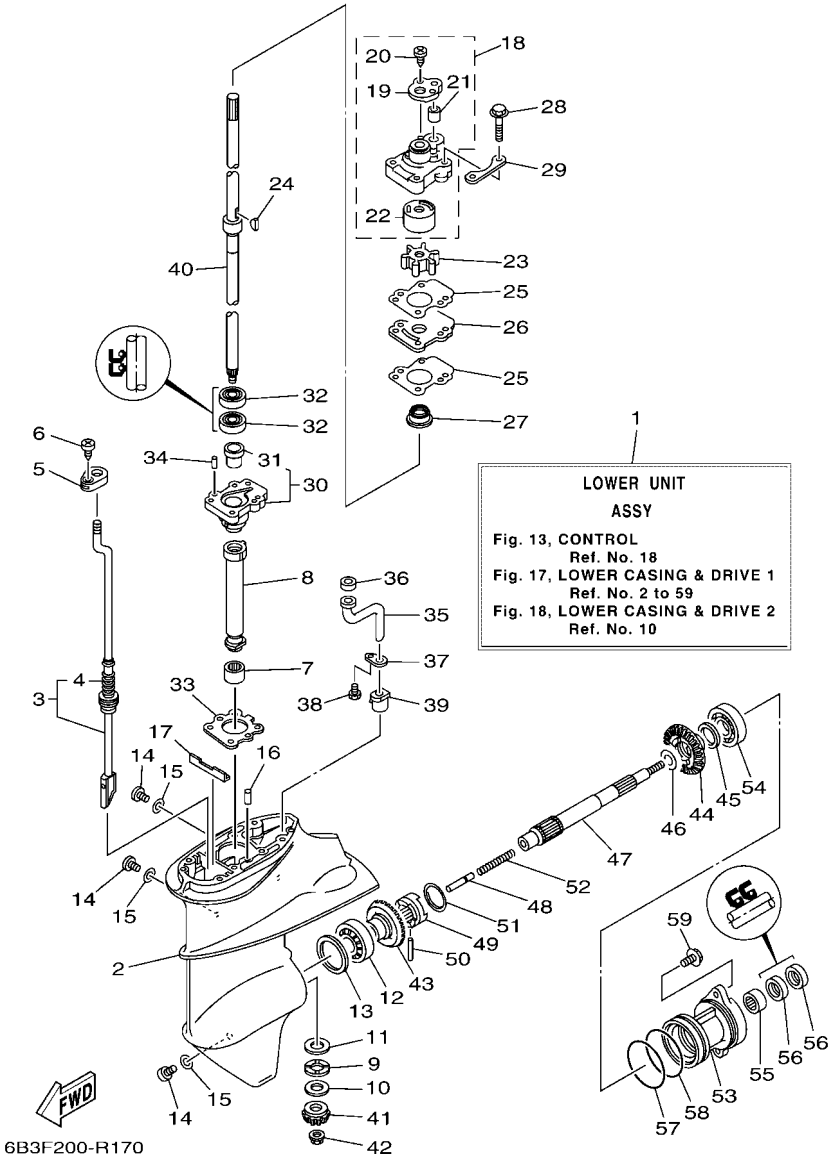

FIG. 17 LOWER CASING & DRIVE 1 — IMPULSOR E INFERIOR 1

REF. NO.	PART NO. CODIGO Nº	DESCRIPTION DESCRIPCION	6B3P	6B4P				REMARKS OBSERVACIONES
17	682–45376–01	GUIDE, SEAL DAMPER GUIA DE SELLO GOMA	1	1				
18	682–44300–41	HOUSING WATER PUMP ASSY BOMBA DE AGUA	1	1				
19	682–44312–00	.COVER, WATER PUMP HOUSING .CUBIERTA CAJA BOMBA DE AGUA	1	1				
20	97780–40112	.SCREW, OVAL HEAD TAPPING .TORNILLO DE CABEZA DE CONO ACH	2	2				
21	682–44365–01	.DAMPER, WATER SEAL 1 .HULE DE SELLO DE AGUA 1	1	1				
22	682–44322–41	.INSERT, CARTRIDGE .CARTUCHO	1	1				
23	682–44352–03	IMPELLER IMPULSOR	1	1				
24	90280–03005	KEY, WOODRUFF CUNA WOODRUFF	1	1				
25	682–44315–A0	GASKET, WATER PUMP EMPAQUE	2	2				
26	682–44323–40	OUTER PLATE, CARTRIDGE PLACA EXTERIOR DEL CARTUCHO	1	1				
27	682–45344–00	COVER, OIL SEAL CUBIERTA SELLO ACEITE	1	1				
28	97E95–06545	BOLT, HEXAGON W/W DEEP RECESS TORNILLO HEXAGONAL CON RONDONA	4	4				
29	682–44328–00	PLATE PLACA	2	2				
30	6E7–45331–00–CA	HOUSING, BEARING CAJA DE COJINETE	1	1				
31	626–45316–09	.BUSHING, DRIVE SHAFT .BUJE, EJE DE MANDO	1	1				
32	93101–20001	OIL SEAL SELLO ACEITE	2	2				
33	683–45315–A0	PACKING, LOWER CASING EMPAQUE	1	1				
34	93606–12019	PIN, DOWEL PASADOR DE CLAVIJA	2	2				
35	683–44362–01	TUBE, WATER 2 TUBO DE AGUA 2	1	1				
36	683–44365–02	DAMPER, WATER SEAL 1 HULE DE SELLO DE AGUA 1	1	1				
37	683–44373–00	SET PLATE, WATER TUBE PLACA PARA FIJAR TUBO	1	1				
38	97D95–06010	BOLT, HEXAGON DEEP RECESS TORNILLO HEXAGONAL	1	1				
39	6E7–44366–01	DAMPER, WATER SEAL 2 GOMA DEL SELLO DE AGUA 2	1	1				
40	6B4–45501–00	DRIVE SHAFT COMP. EJE DE MANDO COMPL.	1	1				S(17.4") S(17.4")
	6B4–45501–10	DRIVE SHAFT COMP. EJE DE MANDO COMPL.	1	1				L(22.4") L(22.4")
	6B4–45501–30	DRIVE SHAFT COMP. EJE DE MANDO COMPL.		1				X(28.0") X(28.0")
41	63V–45551–00	PINION (13T) PINON (13T)	1	1				

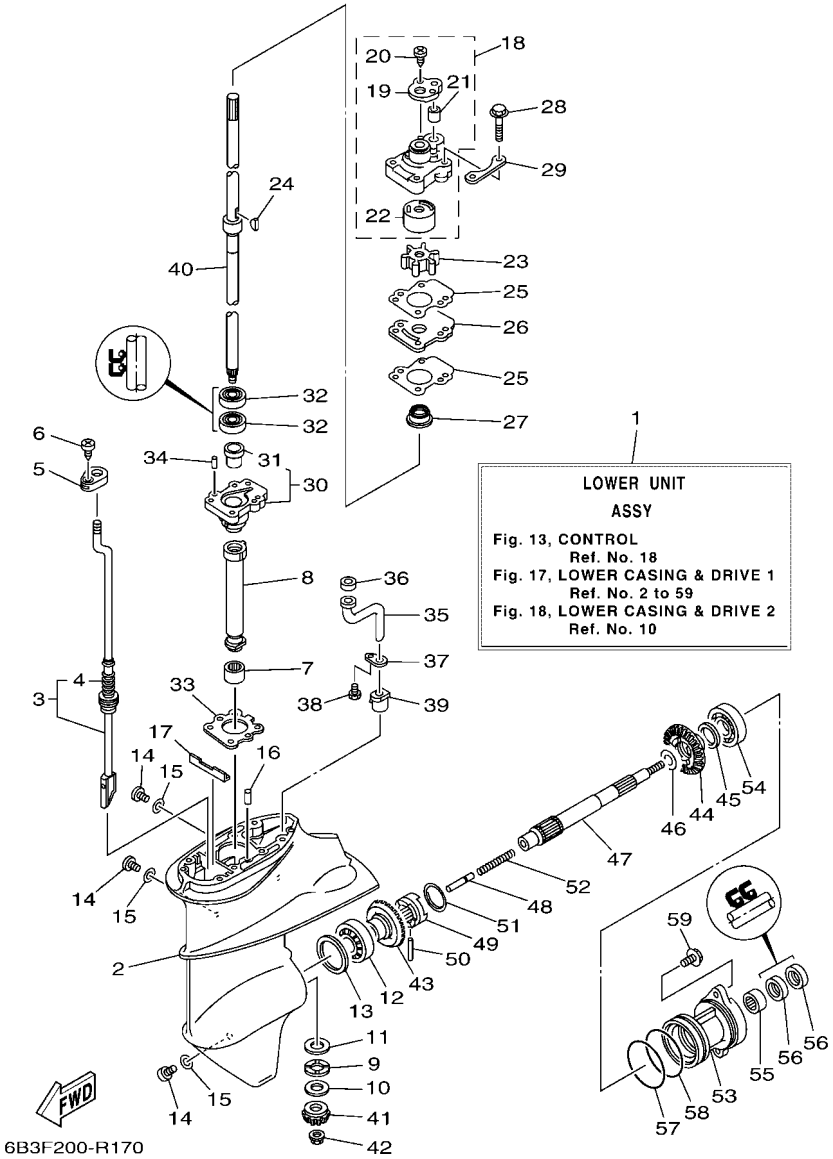

FIG. 17 LOWER CASING & DRIVE 1 — IMPULSOR E INFERIOR 1

REF. NO.	PART NO. CODIGO Nº	DESCRIPTION DESCRIPCION	6B3P	6B4P				REMARKS OBSERVACIONES
42	90179–08M06	NUT TUERCA	1	1				
43	6E7–45560–01	GEAR 1 (27T) ENGRANAJE 1 (27T)	1	1				
44	6E7–45571–00	GEAR 2 (27T) ENGRANAJE 2 (27T)	1	1				
45	626–45577–00	SHIM (T:0.10MM) LAINA (T:0.10MM)	1	1				UR UR
	626–45577–10	SHIM (T:0.20MM) LAINA (T:0.20MM)	1	1				UR UR
	626–45577–20	SHIM (T:0.30MM) LAINA (T:0.30MM)	1	1				UR UR
	626–45577–30	SHIM (T:0.40MM) LAINA (T:0.40MM)	1	1				UR UR
	626–45577–40	SHIM (T:0.50MM) LAINA (T:0.50MM)	1	1				UR UR
46	90201–17682	WASHER, PLATE ARANDELA PLANA	1	1				
47	683–45611–00	SHAFT, PROPELLER EJE PROPUSOR	1	1				
48	650–45635–00	PLUNGER, SHIFT EMBOLO DE CAMBIO	1	1				
49	682–45631–00	CLUTCH, DOG EMBRAGUE DE GARRA	1	1				
50	90250–05010	PIN, STRAIGHT PASADOR CILINDRICO	1	1				
51	648–45633–11	RING, CROSS PIN ANILLO DE PASADOR	1	1				
52	90501–14M06	SPRING, COMPRESSION RESORTE DE COMPRESION	1	1				
53	683–45361–02–8D	CAP, LOWER CASING FUNDA INFERIOR	1	1				UR UR
	6B4–45361–00–8D	CAP, LOWER CASING FUNDA INFERIOR	1	1				UR ANTI-CORROSIVE UR ANTI-CORROSIVE
54	93306–00501	BEARING COJINETE	1	1				
55	93315–317U2	BEARING COJINETE DE RODILLOS	1	1				
56	93101–17001	OIL SEAL SELLO ACEITE	2	2				
57	93210–57M09	O-RING ANILLO O	1	1				
58	93210–56M80	O-RING ANILLO O	1	1				
59	97E95–06520	BOLT, HEXAGON W/W DEEP RECESS TORNILLO HEXAGONAL CON RONDONA	2	2				

FIG. 18 LOWER CASING & DRIVE 2 — IMPULSOR E INFERIOR 2

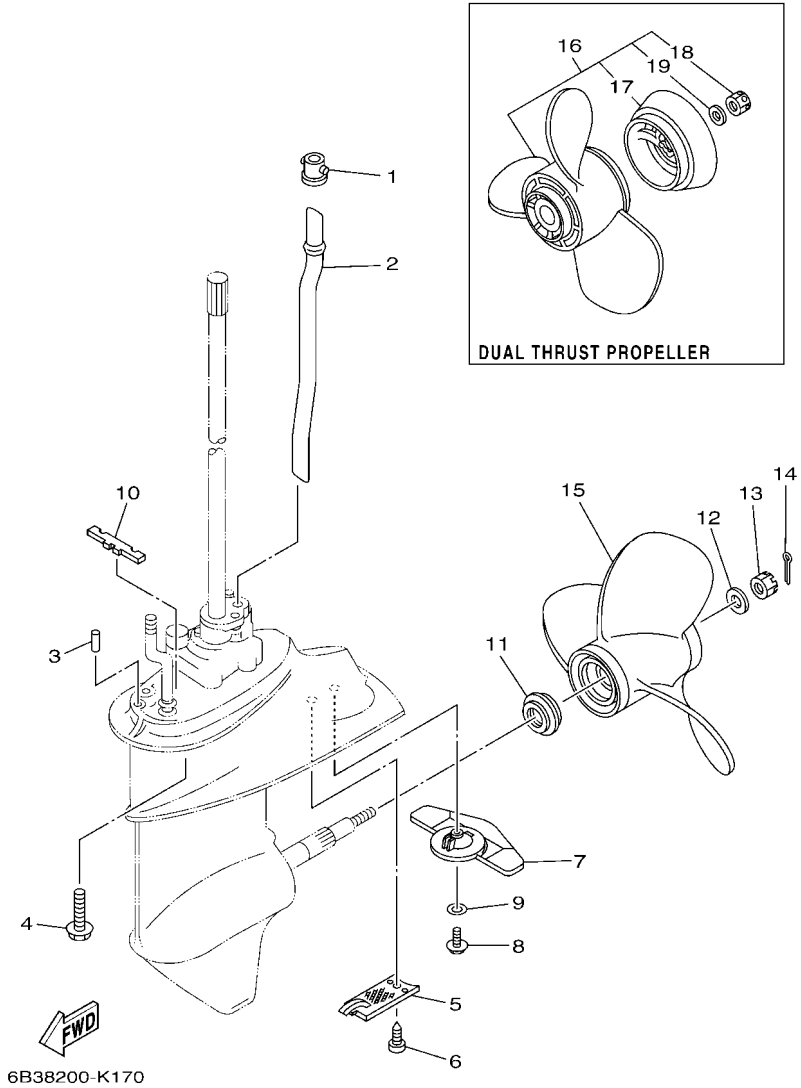

REF. NO.	PART NO. CODIGO Nº	DESCRIPTION DESCRIPCION	6B3P	6B4P				REMARKS OBSERVACIONES
1	626–44365–02	DAMPER, WATER SEAL 1 HULE DE SELLO DE AGUA 1	1	1				
2	682–44361–01	TUBE, WATER 1 TUBO DE AGUA 1	1	1				S(17.4") S(17.4")
	6B4–44361–10	TUBE, WATER 1 TUBO DE AGUA 1	1	1				L(22.4") L(22.4")
	6B4–44361–30	TUBE, WATER 1 TUBO DE AGUA 1		1				X(28.0") X(28.0")
3	93606–12019	PIN, DOWEL PASADOR DE CLAVIJA	2	2				
4	97E75–08535	BOLT, HEXAGON W/W DEEP RECESS TORNILLO HEXAGONAL CON RONDONA	4	4				
5	6E7–45214–00	COVER, WATER INLET 1 CUBIERTA, ENTRADA AGUA 1	1	1				
6	97880–05012	SCREW, PAN HEAD TORNILLO DE CABEZA CON PLANA	1	1				
7	6B4–45251–00	ANODE CATODE	1	1				
8	95D95–06020	BOLT, FLANGE DEEP RECESS CERROJO, REBORDE HUECO PROFUND	1	1				
9	92990–06300	WASHER, INTERNAL TOOTH ARANDELA PLANA	1	1				
10	682–45375–02	DAMPER, SEAL GOMA DE SELLO	1	1				
11	6E7–45987–01	SPACER 1 ESPACIADOR 1	1	1				
12	90201–10M01	WASHER, PLATE ARANDELA PLANA	1	1				
13	90171–10M01	NUT, CASTLE TUERCA ENTALLADA	1	1				
14	91490–30025	PIN. COTTER CHAVETA	1	1				
15	683–45949–00	PROPELLER (3X9-1/2"X6-1/2"-J) PROPELA (3X9-1/2"X6-1/2"-J)	1	1				UR UR
	63V–45947–00	PROPELLER (3X9-1/4"X8"-J) PROPELA (3X9-1/4"X8"-J)	1	1				UR UR
	683–45947–00	PROPELLER (3X9-1/4"X8"-J) PROPELA (3X9-1/4"X8"-J)	1	1				UR UR
	63V–45945–10	PROPELLER (3X9-1/4"X9"-J1) PROPELA (3X9-1/4"X9"-J1)	1	1				UR UR
	683–45952–00	PROPELLER (3X9-1/4"X9-3/4"-J) PROPELA (3X9-1/4"X9-3/4"-J)	1	1				UR UR
	683–45943–00	PROPELLER (3X9-1/4"X10-1/2"-J) PROPERA (3X9-1/4"X10-1/2"-J)	1	1				UR UR
	63V–45952–10	PROPELLER (3X9-1/4"X10"-J1) PROPELA (3X9-1/4"X10"-J1)	1	1				UR UR
	63V–45943–10	PROPELLER (3X9-1/4"X11"-J1) PROPELA (3X9-1/4"X11"-J1)	1	1				UR UR
	683–45941–00	PROPELLER (3X9-1/4"X12"-J) PROPERA (3X9-1/4"X12"-J)	1	1				UR UR
16	683–W4592–02	PROPELLER (3X9-3/4"X6-1/2"-J) PROPELA (3X9-3/4"X6-1/2"-J)	1	1				UR UR
	683–W4591–02	PROPELLER (3X9-3/4"X8"-J) PROPELA (3X9-3/4"X8"-J)	1	1				UR UR

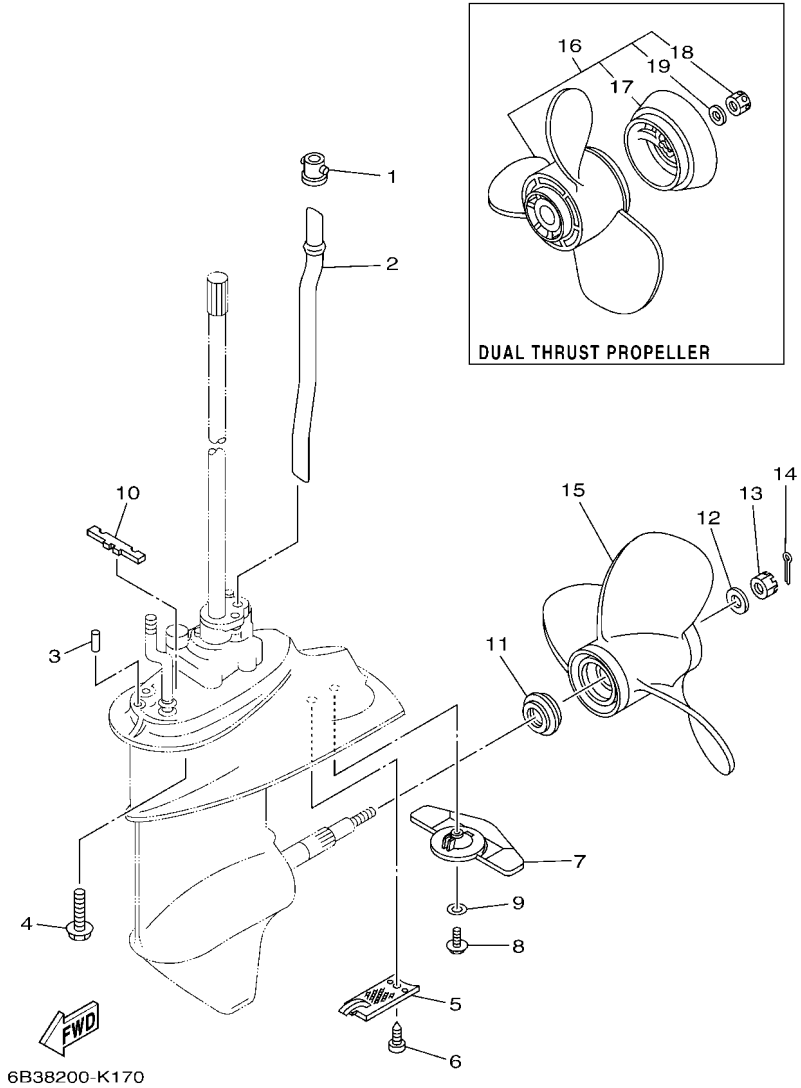

FIG. 18 LOWER CASING & DRIVE 2 — IMPULSOR E INFERIOR 2

REF. NO.	PART NO. CODIGO Nº	DESCRIPTION DESCRIPCION	6B3P	6B4P				REMARKS OBSERVACIONES
17	6E7–45986–00	.RING, DEFLECTOR .ANILLO REFLECTOR	1	1				
18	90171–10M07	.NUT, CASTLE .TUERCA ENTALLADA	1	1				
19	90201–10M02	.WASHER, PLATE .ARANDELA PLANA	1	1				

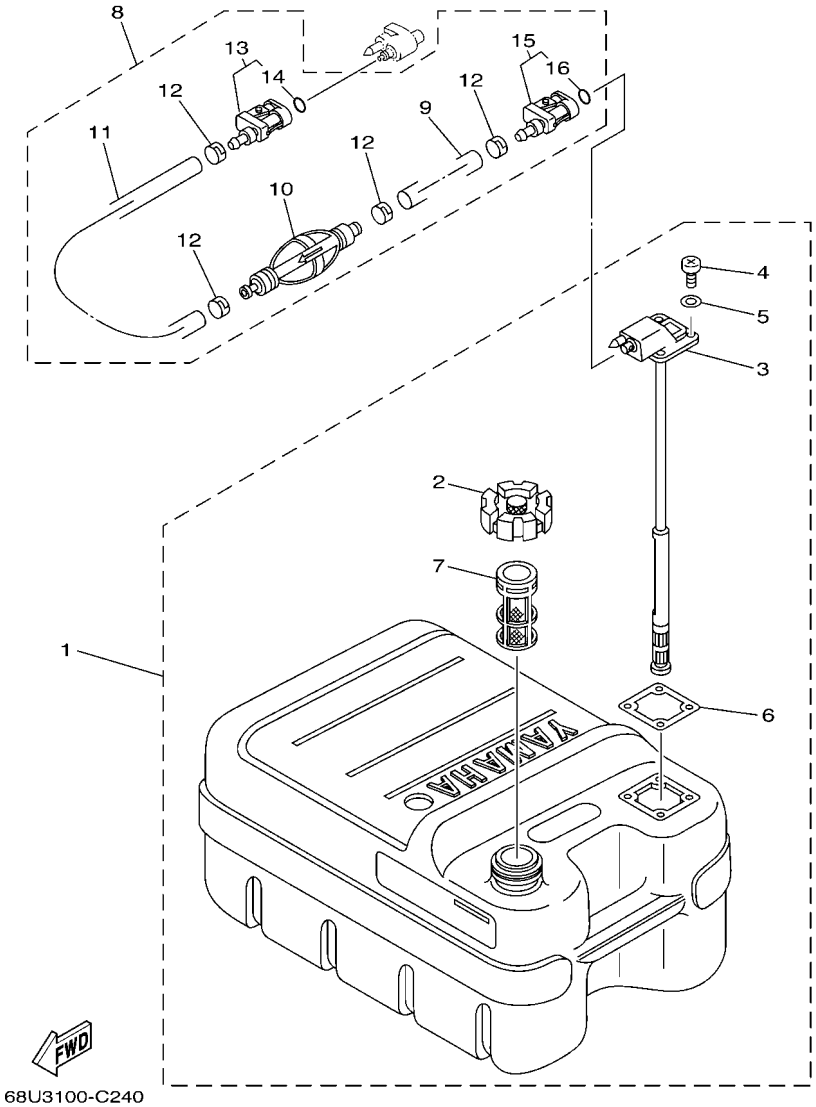

FIG. 19 FUEL TANK — DEPOSITO DE COMBUSTIBLE

REF. NO.	PART NO. CODIGO Nº	DESCRIPTION DESCRIPCION	6B3P	6B4P				REMARKS OBSERVACIONES
1	6YJ–24201–21	FUEL TANK ASSY (24L) TANQUE DEL COMBUSTIBLE (24L)	1	1				AP AP
2	6YJ–24610–01	.CAP ASSY .TAPA COMPLETA	1	1				
3	6YJ–24260–11	.FUEL METER ASSY .MEDIDOR DE COMBUSTIBLE COMPL.	1	1				
4	90157–05M19	.SCREW, PAN HEAD .TORNILLO CABEZA CONICA PLANA	4	4				
5	6Y1–24329–00	.SEAL .SELLO	4	4				
6	6Y1–24268–01	.GASKET, FUEL METER .EMPAQ MEDIDOR DE COMBUSTIBLE	1	1				
7	6YJ–24167–00	.STRAINER .COLADOR	1	1				
8	61J–24306–05	FUEL PIPE COMP. 1 TUBO COMBUST. COMPL 1	1	1				AP AP
9	90445–11M58	.HOSE (L2050) .MANGUERA (L2050)	1	1				
10	61J–24360–00	.PRIMER PUMP ASSY .SOPORTE BOMBA	1	1				
11	90445–11M57	.HOSE (L850) .TUBO (L850)	1	1				
12	650–24351–51	.BAND 1 .ABRAZADERA 1	4	4				
13	6G1–24305–05	.FUEL PIPE JOINT COMP. 2 .CONECTOR MANGUERA COMBUST. 2	1	1				
14	93210–08287	..O-RING ..ANILLO O	1	1				
15	6Y1–24305–06	.FUEL PIPE JOINT COMP. 2 .CONECTOR MANGUERA COMBUST. 2	1	1				
16	93210–08287	..O-RING ..ANILLO O	1	1				

FIG. 20 OPTIONAL PARTS — PARTES OPCIONALES

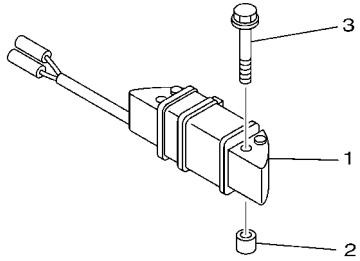

6B39200-L190

REF. NO.	PART NO. CODIGO Nº	DESCRIPTION DESCRIPCION	6B3P	6B4P				REMARKS OBSERVACIONES
1	63V–85533–01	COIL, LIGHTING BOBINA DE LUZ	1	1				
2	90387–06M24	COLLAR ESPACIADOR	2	2				
3	90119–06302	BOLT, WITH WASHER TORNILLO CON ARANDELA	2	2				

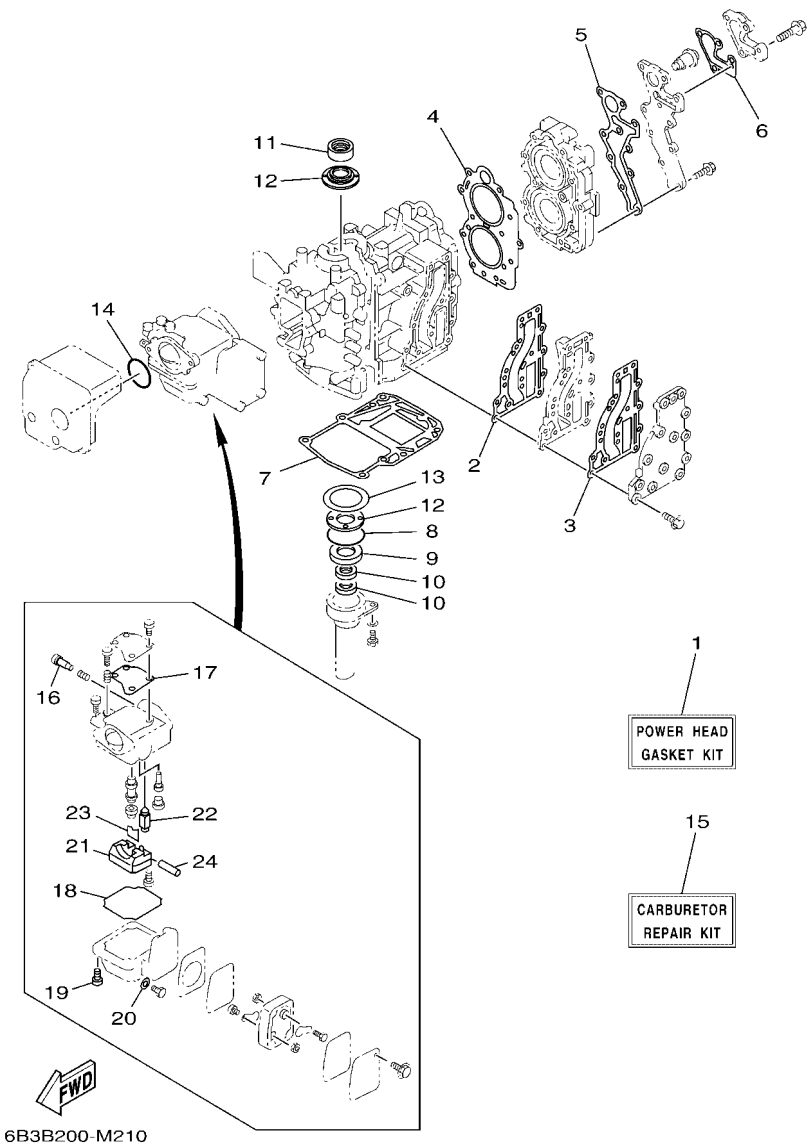

FIG. 21 REPAIR KIT 1 — ESTUCHE REPARATION 1

REF. NO.	PART NO. CODIGO Nº	DESCRIPTION DESCRIPCION	6B3P	6B4P				REMARKS OBSERVACIONES
1	6B4–W0001–00	POWER HEAD GASKET KIT JUEGO DE EMPAQUE DE MOTOR	1	1				
2	6B4–41112–A0	.GASKET, EXHAUST INNER COVER .EMPAQUE	1	1				
3	63V–41112–A0	.GASKET, EXHAUST INNER COVER .EMPAQUE	1	1				
4	63V–11181–A2	.GASKET, CYLINDER HEAD 1 .JUNTA, DE CULATA 1	1	1				
5	6B4–11193–A1	.GASKET, HEAD COVER 1 .EMPAQUE	1	1				
6	682–12414–A1	.GASKET, COVER .EMPAQUE	1	1				
7	6B4–11351–A1	.GASKET, CYLINDER .JUNTA, DE CILINDRO	1	1				
8	93210–46M16	.O-RING .ANILLO O	1	1				
9	93102–25010	.OIL SEAL .SELLO ACEITE	1	1				
10	93101–13M27	.OIL SEAL .SELLO ACEITE	2	2				
11	93110–23M00	.OIL SEAL .SELLO ACEITE	1	1				
12	63V–11445–00	.SPACER .ESPACIADOR	2	2				
13	90201–46M29	.WASHER, PLATE .ARANDELA PLANA	1	1				
14	93210–35M86	.O-RING .ANILLO O	1	1				
15	63V–W0093–02	CARBURETOR REPAIR KIT KIT REPARACION CARBURADOR	1	1				
16	679–14923–01	.SCREW, PILOT .TORNILLO DE AJUSTE	1	1				
17	63V–14126–00	.GASKET .EMPAQUE	1	1				
18	63V–14984–00	.GASKET, FLOAT CHAMBER .EMPAQUE CAMARA DE BOIA	1	1				
19	97980–04114	.SCREW, WITH WASHER .TORNILLO, CON ARANDELA	4	4				
20	65W–14398–00	.GASKET .EMPAQUE	1	1				
21	63V–14985–00	.FLOAT .BOIA	1	1				
22	6AH–14546–00	.VALVE, NEEDLE .VALVULA DE AGUJA	1	1				
23	633–14159–00	.CLIP .PRESILLA	1	1				
24	6H4–14548–00	.PIN, FLOAT ARM .PASADOR DE BRAZO DE BOIA	1	1				

FIG. 22 REPAIR KIT 2 — ESTUCHE REPARATION 2

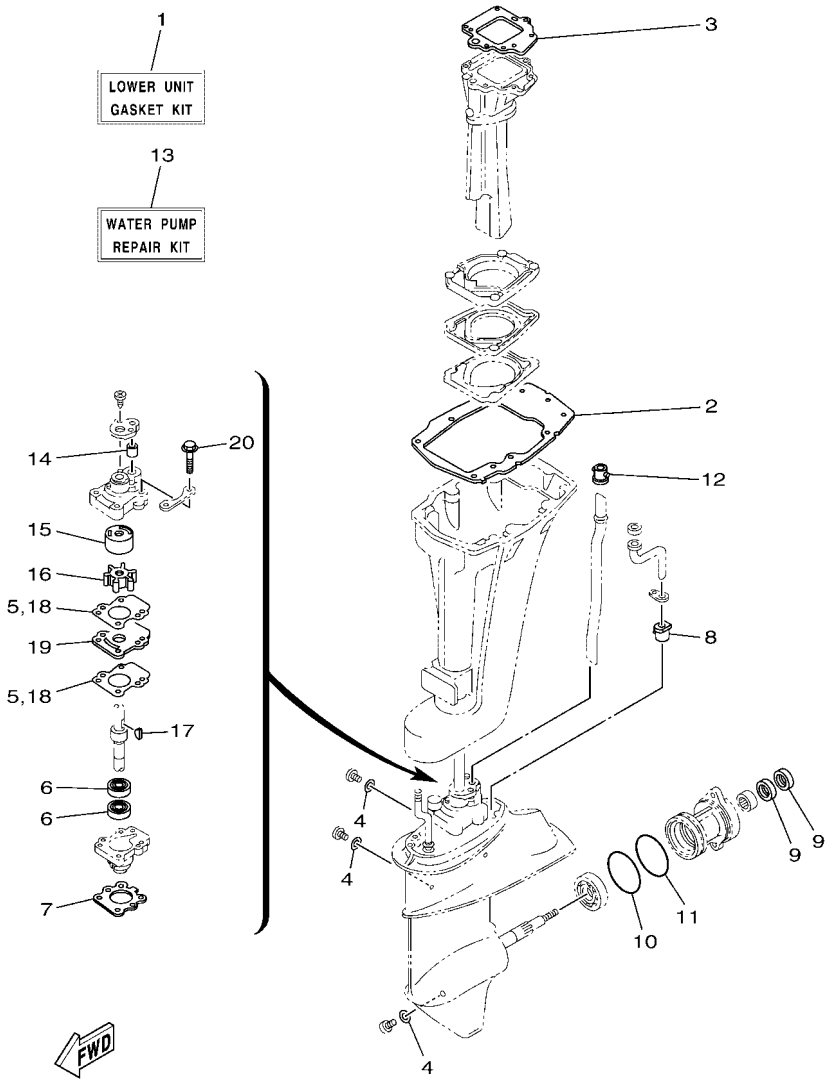

REF. NO.	PART NO. CODIGO Nº	DESCRIPTION DESCRIPCION	6B3P	6B4P				REMARKS OBSERVACIONES
1	6B4–W0001–21	LOWER UNIT GASKET KIT JUEGO DE EMPAQUE UNIDAD INFER.	1	1				
2	682–45113–A3	.GASKET, UPPER CASING .EMPAQUE	1	1				
3	682–41133–A0	.GASKET, EXHAUST MANIFOLD 1 .EMPAQUE ESCAPE MULTIPLE	1	1				
4	90430–08003	.GASKET .JUNTA	3	3				
5	682–44315–A0	.GASKET, WATER PUMP .EMPAQUE	2	2				
6	93101–20001	.OIL SEAL .SELLO ACEITE	2	2				
7	683–45315–A0	.PACKING, LOWER CASING .EMPAQUE	1	1				
8	6E7–44366–01	.DAMPER, WATER SEAL 2 .GOMA DEL SELLO DE AGUA 2	1	1				
9	93101–17001	.OIL SEAL .SELLO ACEITE	2	2				
10	93210–57M09	.O-RING .ANILLO O	1	1				
11	93210–56M80	.O-RING .ANILLO O	1	1				
12	626–44365–02	.DAMPER, WATER SEAL 1 .HULE DE SELLO DE AGUA 1	1	1				
13	6B4–W0078–0C	WATER PUMP REPAIR KIT ESTUCHE REPARACION BOMBA AGUA	1	1				
14	682–44365–01	.DAMPER, WATER SEAL 1 .HULE DE SELLO DE AGUA 1	1	1				
15	682–44322–41	.INSERT, CARTRIDGE .CARTUCHO	1	1				
16	682–44352–03	.IMPELLER .IMPULSOR	1	1				
17	90280–03005	.KEY, WOODRUFF .CUNA WOODRUFF	1	1				
18	682–44315–A0	.GASKET, WATER PUMP .EMPAQUE	2	2				
19	682–44323–40	.OUTER PLATE, CARTRIDGE .PLACA EXTERIOR DEL CARTUCHO	1	1				
20	97E95–06545	.BOLT, HEXAGON W/W DEEP RECESS .TORNILLO HEXAGONAL CON RONDONA	4	4				

NUMERICAL INDEX
INDICE NUMERICO

PART NO. CODIGO Nº	REF. NO.
6B4–11111–00–1S	3 – 18
63V–11181–A2	3 – 19
	21 – 4
6B4–11191–00–1S	3 – 21
6B4–11193–A1	3 – 22
	21 – 5
682–11325–00	1 – 1
	3 – 7
6B4–11351–A1	3 – 29
	21 – 7
676–11372–00	3 – 15
6B4–11400–00	4 – 6
63V–11412–02	4 – 7
63V–11422–02	4 – 8
63V–11432–02	4 – 9
63V–11442–02	4 – 10
63V–11445–00	4 – 27
	21 – 12
63V–11515–02	4 – 12
682–11610–01	4 – 21
682–11610–11	4 – 21
682–11610–21	4 – 21
6E7–11631–00–97	4 – 20
634–11633–00	4 – 22
6E7–11635–00	4 – 20
6E7–11636–00	4 – 20
6K4–11651–00	4 – 14
682–11681–00	4 – 13
6E5–12411–30	1 – 2
	3 – 25
688–12412–00	3 – 26
682–12413–00–1S	3 – 24
682–12414–A1	1 – 3
	3 – 27
	21 – 6
63W–13610–01	5 – 1
63V–13610–11	5 – 1
63V–14126–00	6 – 5
	21 – 17
633–14159–00	6 – 20
	21 – 23
6B3–14301–04	6 – 1
6B4–14301–04	6 – 1
65W–14398–00	6 – 16
	21 – 20
6B4–14440–A0	5 – 4
624–14485–00	3 – 3
650–14485–03	3 – 4

PART NO. CODIGO Nº	REF. NO.
63V–14497–02	13 – 1
63V–14523–00	6 – 9
63V–14527–00	6 – 4
6AH–14546–00	6 – 19
	21 – 22
6H4–14548–00	6 – 21
	21 – 24
697–14555–00	6 – 3
65L–14565–00	6 – 6
679–14923–01	6 – 2
	21 – 16
676–14943–29	6 – 14
6G1–14943–79	6 – 14
63V–14947–00	6 – 13
6B3–14947–00	6 – 13
676–14948–06	6 – 7
679–14966–00	6 – 8
63V–14980–02	6 – 12
63V–14984–00	6 – 11
	21 – 18
63V–14985–00	6 – 18
	21 – 21
65W–14992–09	6 – 17
6B4–15100–01	3 – 2
6B4–15396–00–CA	4 – 1
6B4–15663–01	8 – 29
63V–15705–10	8 – 9
6B4–15710–10	8 – 1
6B4–15711–10	8 – 2
63V–15713–00	8 – 7
63V–15714–00	8 – 5
63V–15716–10	8 – 8
63V–15726–00	8 – 19
63V–15734–00	8 – 17
63V–15741–00	8 – 6
63V–15744–00	8 – 12
6B4–15746–00	13 – 22
6L2–15747–00	13 – 26
63V–15748–00	8 – 16
6G1–15755–00	8 – 20
6B4–15758–A0	8 – 22
6B4–15761–00	2 – 8
6B4–15762–00	8 – 23
63V–15764–00	8 – 3
68T–15764–00	8 – 4
63V–15767–01	8 – 10
6B4–15770–00	13 – 28
6G1–15779–00	8 – 21

PART NO. CODIGO Nº	REF. NO.
68T–15784–00	8 – 11
6A0–15789–01	8 – 28
68T–15793–00	8 – 13
63V–15794–00	8 – 15
6YJ–24167–00	19 – 7
6YJ–24201–21	19 – 1
6YJ–24260–11	19 – 3
6Y1–24268–01	19 – 6
6G1–24304–10	7 – 1
6G1–24305–05	19 – 13
6Y1–24305–06	19 – 15
61J–24306–05	19 – 8
6J8–24311–00	8 – 27
6B4–24329–00	7 – 13
6Y1–24329–00	19 – 5
650–24351–51	19 – 12
61J–24360–00	19 – 10
6E0–24378–00	16 – 26
63V–24411–00	6 – 27
6G1–24411–00	6 – 29
6G1–24412–02	6 – 28
6L5–24421–00	6 – 31
6G1–24431–01	6 – 30
6G1–24452–00	6 – 26
61N–24521–00	7 – 5
61N–24560–00	7 – 3
61N–24563–00	1 – 5
	7 – 4
648–24566–02	7 – 11
6YJ–24610–01	19 – 2
6B4–26301–00	12 – 21
61N–26326–01	11 – 2
63V–41111–00–1S	3 – 11
63V–41112–A0	3 – 13
	21 – 3
6B4–41112–A0	3 – 12
	21 – 2
63V–41113–00–1S	3 – 14
682–41116–00–CA	16 – 13
6B4–41116–A0–CA	16 – 13
6B4–41131–01–CA	16 – 8
6B4–41131–11–CA	16 – 8
6B4–41131–21–CA	16 – 8
682–41133–A0	16 – 9
	22 – 3
6B4–41137–A0–CA	16 – 1
6B4–41137–B0–CA	16 – 1
63V–41211–00	13 – 7

PART NO. CODIGO Nº	REF. NO.
6B4–41252–00	5 – 12
6B4–41262–00	5 – 11
6J8–41262–00	13 – 8
	13 – 27
6B4–41271–01	5 – 8
6B4–41273–00	5 – 9
6B4–41274–00	5 – 10
6B4–41283–00	13 – 5
6B4–41638–00	13 – 9
6B4–41662–00	13 – 20
6B4–42111–00–8D	12 – 1
6B4–42119–00	12 – 13
6B4–42119–10	12 – 22
6B4–42125–00	12 – 9
6B4–42126–00	12 – 10
6B4–42131–00–8D	12 – 6
6F5–42137–20	12 – 14
	12 – 24
6B4–42138–00	12 – 20
67D–42177–01	12 – 23
6G1–42177–01	12 – 15
6B4–42511–00–8D	15 – 2
682–42521–00	15 – 5
648–42528–01	15 – 1
682–42537–01	15 – 7
6B3–42610–23	2 – 1
6B4–42610–43	2 – 1
6B4–42610–53	2 – 1
6B4–42615–01	2 – 3
6B4–4261A–03	2 – 2
6B4–4261A–13	2 – 2
6B4–42646–00	2 – 9
6B4–42647–00	2 – 6
6B4–42651–00	2 – 4
677–42675–10	2 – 10
677–42676–10	2 – 11
63W–42678–40	2 – 12
	2 – 13
63V–42678–41	2 – 12
	2 – 13
6E0–42681–41	2 – 14
	2 – 15
6B4–42711–00–8D	11 – 1
6B4–42716–01	11 – 11
6B4–42727–01	11 – 3
6EE–42794–40	11 – 19
6EE–42794–50	11 – 20
6B4–42815–00–8D	11 – 4

PART NO. CODIGO Nº	REF. NO.
6B4–42816–00	11 – 5
682–43111–05–8D	14 – 1
682–43112–05–8D	14 – 2
6B4–43113–00	14 – 10
648–43114–01	14 – 6
6E7–43116–00	14 – 5
663–43118–01–8D	14 – 3
66T–43144–00	11 – 13
689–43160–00	14 – 16
6B4–43181–00	14 – 38
6B4–43181–10	14 – 38
682–43311–07–8D	14 – 18
682–43318–01	14 – 47
	14 – 49
676–43373–01	14 – 21
682–43611–01	14 – 32
682–43614–01	14 – 30
682–43615–02	14 – 31
682–43616–00	14 – 25
682–43617–00	14 – 29
6B4–43627–00	14 – 39
	14 – 39
6B4–43631–01	14 – 23
682–43641–01	14 – 26
682–43643–00	14 – 50
682–43659–01	14 – 34
6B4–43681–10	14 – 48
6B4–44111–01–8D	13 – 10
6B4–44116–00	13 – 15
6B4–44121–00	13 – 11
6B4–44125–00	13 – 13
6B4–44143–00	13 – 17
61N–44146–00	13 – 19
6B4–44147–00	17 – 4
6B4–44150–00	17 – 3
6B4–44150–10	17 – 3
6B4–44150–30	17 – 3
682–44176–00	17 – 5
682–44300–41	17 – 18
682–44312–00	17 – 19
682–44315–A0	17 – 25
	22 – 5
	22 – 18
682–44322–41	17 – 22
	22 – 15
682–44323–40	17 – 26
	22 – 19
682–44328–00	17 – 29

PART NO. CODIGO Nº	REF. NO.
682–44352–03	17 – 23
	22 – 16
682–44361–01	18 – 2
6B4–44361–10	18 – 2
6B4–44361–30	18 – 2
683–44362–01	17 – 35
682–44365–01	17 – 21
	22 – 14
626–44365–02	18 – 1
	22 – 12
683–44365–02	17 – 36
6E7–44366–01	17 – 39
	22 – 8
683–44373–00	17 – 37
6BL–44391–00	11 – 12
682–44514–01–CA	15 – 11
682–44514–31–CA	15 – 11
682–44521–02	15 – 20
682–44522–01	15 – 18
682–44532–01	16 – 19
682–44551–02–8D	15 – 21
682–44552–02–8D	15 – 22
682–44555–30	15 – 27
6B4–44555–30	15 – 27
682–44557–00	15 – 26
682–45111–05–8D	16 – 6
682–45111–15–8D	16 – 6
6B4–45113–01	16 – 3
682–45113–A3	16 – 3
	22 – 2
682–45126–01–CA	16 – 11
682–45127–00	16 – 12
6B4–45135–00	16 – 23
6B4–45151–00–8D	15 – 28
682–45211–31–8D	16 – 20
6E7–45214–00	18 – 5
6B4–45251–00	1 – 8
	18 – 7
6B4–45300–03–8D	17 – 1
6B4–45300–13–8D	17 – 1
6B4–45300–33–8D	17 – 1
6E8–45311–01–8D	17 – 2
683–45315–A0	17 – 33
	22 – 7
626–45316–09	17 – 31
6B4–45318–00	16 – 17
6E7–45331–00–CA	17 – 30
682–45344–00	17 – 27

NUMERICAL INDEX
INDICE NUMERICO

PART NO. CODIGO Nº	REF. NO.
6B4–45361–00–8D	17 – 53
683–45361–02–8D	17 – 53
682–45375–02	18 – 10
682–45376–01	17 – 17
6B4–45501–00	17 – 40
6B4–45501–10	17 – 40
6B4–45501–30	17 – 40
6E7–45536–00	17 – 8
63V–45551–00	17 – 41
6E7–45560–01	17 – 43
664–45567–01	17 – 13
664–45567–10	17 – 13
664–45567–20	17 – 13
664–45567–30	17 – 13
664–45567–40	17 – 13
664–45567–50	17 – 13
664–45567–60	17 – 13
6E7–45571–00	17 – 44
626–45577–00	17 – 45
626–45577–10	17 – 45
626–45577–20	17 – 45
626–45577–30	17 – 45
626–45577–40	17 – 45
6E8–45587–10	17 – 10
6E8–45587–30	17 – 10
683–45611–00	17 – 47
682–45631–00	17 – 49
648–45633–11	17 – 51
650–45635–00	17 – 48
683–45941–00	18 – 15
683–45943–00	18 – 15
63V–45943–10	18 – 15
63V–45945–10	18 – 15
63V–45947–00	18 – 15
683–45947–00	18 – 15
683–45949–00	18 – 15
683–45952–00	18 – 15
63V–45952–10	18 – 15
6E7–45986–00	18 – 17
6E7–45987–01	18 – 11
6EE–81994–40	8 – 30
6EE–81994–50	8 – 31
6EE–81995–40	8 – 32
6EE–81995–50	8 – 33
703–82119–01	9 – 10
6E7–82127–00	16 – 16
6B4–82316–00	10 – 14
62E–8231X–00	10 – 6

PART NO. CODIGO Nº	REF. NO.
6E3–82370–21	10 – 9
62E–82371–11	10 – 5
682–82556–00	11 – 17
689–82575–04	11 – 16
689–8257Y–00	11 – 18
6N7–83557–00	10 – 18
6B4–85520–01	9 – 3
6B4–85530–10	10 – 3
63V–85533–01	9 – 4
	20 – 1
6B4–85540–06	10 – 1
6B4–85550–01	9 – 1
6B4–85550–10	9 – 1
6B4–85570–10	10 – 3
	10 – 4
6B4–85580–02	9 – 2
6B4–W0001–00	21 – 1
6B4–W0001–21	22 – 1
682–W0004–01	5 – 2
6B4–W0078–0C	1 – 9
	22 – 13
6B4–W0090–01–1S	3 – 1
63V–W0093–02	21 – 15
656–W2810–03	7 – 14
683–W4591–02	18 – 16
683–W4592–02	18 – 16
90101–06M29	14 – 13
90101–08M30	15 – 13
90101–12013	14 – 7
90102–08M01	14 – 55
90105–06M01	16 – 14
90105–07M05	3 – 20
90109–06M05	14 – 37
90109–06M80	11 – 14
	13 – 16
90109–06M81	13 – 21
90116–08013	15 – 29
90119–06023	3 – 23
	9 – 5
90119–06283	8 – 26
90119–06302	9 – 9
	20 – 3
90119–06312	10 – 2
90119–06MA3	3 – 28
90119–06MA4	3 – 17
	16 – 4
90119–08204	15 – 23
90119–08M07	3 – 10

PART NO. CODIGO Nº	REF. NO.
90152–05011	12 – 16
	12 – 25
90157–05M19	19 – 4
90157–06M06	16 – 15
90159–05007	5 – 6
90170–08009	15 – 30
90170–12066	9 – 12
90171–08M00	14 – 57
90171–10M01	18 – 13
90171–10M07	18 – 18
90173–06009	8 – 25
90179–08M06	17 – 42
90185–08057	15 – 17
90201–08M12	15 – 14
90201–08M13	15 – 15
90201–106M5	14 – 53
90201–10M01	18 – 12
90201–10M02	12 – 17
	18 – 19
90201–10M76	14 – 54
90201–12018	14 – 8
90201–12472	9 – 13
90201–14377	4 – 24
90201–15017	17 – 11
90201–17682	17 – 46
90201–28013	12 – 4
90201–46M29	4 – 28
	21 – 13
90202–10M56	14 – 45
90202–13M02	15 – 16
90206–10M24	14 – 44
90206–12052	11 – 8
90206–28001	12 – 5
90209–14011	17 – 9
90209–20M23	4 – 16
90209–52M01	15 – 6
90243–04007	14 – 4
90249–06M23	14 – 27
90249–10003	14 – 40
90250–05010	17 – 50
90266–04005	2 – 7
90266–04M00	2 – 5
90280–03005	17 – 24
	22 – 17
90280–05013	9 – 11
90340–08002	17 – 14
90381–12001	14 – 9
90381–20001	12 – 3

PART NO. CODIGO Nº	REF. NO.
90381–35001	12 – 2
90386–08032	12 – 19
90386–12M45	11 – 6
90386–12MA2	11 – 7
90386–40M08	15 – 10
90386–40M09	15 – 8
90387–06369	14 – 12
90387–06M06	13 – 23
90387–06M20	14 – 33
90387–06M24	9 – 8
	20 – 2
90387–06M50	13 – 2
90430–08003	1 – 7
	17 – 15
	22 – 4
90445–07022	16 – 24
90445–07M08	3 – 5
90445–07MA6	16 – 25
90445–09104	3 – 16
	7 – 8
90445–09M00	7 – 9
90445–11M57	19 – 11
90445–11M58	19 – 9
90464–08M02	10 – 13
90465–06M90	9 – 6
	10 – 12
90465–08M99	10 – 16
90465–11M10	10 – 7
90465–11M52	15 – 19
90465–13M36	16 – 28
90467–06016	3 – 6
	16 – 27
90467–08004	7 – 10
90480–25161	10 – 8
	10 – 10
90501–10326	6 – 10
90501–14M06	17 – 52
90501–18M00	14 – 20
90501–23215	12 – 18
90502–10M07	14 – 17
90506–12002	14 – 41
90506–18009	11 – 15
90506–26M01	14 – 36
90506–26M07	14 – 36
90508–08M39	13 – 24
90508–14018	14 – 24
90508–20M38	13 – 6
91490–16010	12 – 12

PART NO. CODIGO Nº	REF. NO.
91490–16018	8 – 18
91490–20015	14 – 56
91490–30025	18 – 14
91609–20008	4 – 17
91690–20010	5 – 13
92990–06300	18 – 9
92990–06600	14 – 43
	14 – 52
92990–08600	14 – 58
	15 – 32
92995–06600	14 – 14
93101–13M27	4 – 4
	21 – 10
93101–17001	17 – 56
	22 – 9
93101–20001	17 – 32
	22 – 6
93102–25010	4 – 3
	21 – 9
93110–23M00	4 – 26
	21 – 11
93210–08287	19 – 14
	19 – 16
93210–32738	1 – 6
	7 – 6
93210–35M86	5 – 7
	21 – 14
93210–40M10	15 – 9
93210–46M16	4 – 2
	21 – 8
93210–56M80	17 – 58
	22 – 11
93210–57M09	17 – 57
	22 – 10
93306–00501	17 – 54
93306–205A1	4 – 11
93310–620W5	4 – 15
93315–314V8	17 – 7
93315–317U2	17 – 55
93332–00005	17 – 12
93390–00029	4 – 19
93420–30042	16 – 18
93440–52009	4 – 18
93450–15023	4 – 25
93602–14104	4 – 23
93604–08062	17 – 16
93606–12019	3 – 9
	15 – 3

PART NO. CODIGO Nº	REF. NO.
93606–12019	16 – 2
	16 – 5
	16 – 21
	17 – 34
	18 – 3
93700–06004	14 – 19
94702–00160	1 – 4
	3 – 30
94702–00247	1 – 4
	3 – 30
95380–03600	6 – 24
95380–06600	12 – 11
95380–06700	13 – 18
	14 – 15
95380–08600	7 – 7
95380–08700	15 – 25
	15 – 25
95680–06100	14 – 42
95780–12300	14 – 11
95D95–06020	18 – 8
95D95–06065	13 – 3
97013–06010	7 – 12
97780–40112	17 – 20
97780–40520	13 – 12
	13 – 14
97780–50110	17 – 6
97880–05012	18 – 6
97980–04114	6 – 15
	21 – 19
97980–04123	6 – 25
97D95–06008	14 – 51
97D95–06010	17 – 38
97D95–06014	11 – 9
97E75–08525	14 – 22
97E75–08535	16 – 22
	18 – 4
97E75–08550	16 – 7
97E75–08555	15 – 24
97E95–06512	10 – 17
	13 – 4
97E95–06514	10 – 15
97E95–06516	4 – 5
	10 – 11
	11 – 10
97E95–06520	5 – 3
	7 – 2
	9 – 7
	13 – 25

PART NO. CODIGO Nº	REF. NO.
97E95–06520	16 – 10
	17 – 59
97E95–06525	15 – 4
	15 – 12
97E95–06535	8 – 24
97E95–06545	17 – 28
	22 – 20
97E95–06595	5 – 5
97E95–08412	15 – 31
97E95–08530	12 – 8
97E95–08555	12 – 7
98580–04006	6 – 32
98580–04008	6 – 22
98780–05015	3 – 8
98980–03006	6 – 23
99080–05600	14 – 28
	14 – 35
99080–09600	14 – 46