YAMAHA

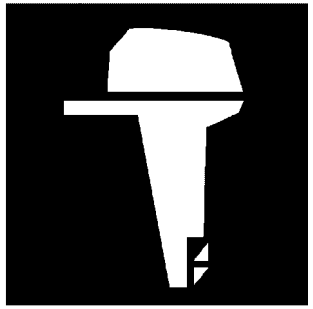

PARTS CATALOGUE
CATALOGO DE REPUESTOS

9.9FMH'23 (6MR1)
15FMH'23 (63WP)

YAMAHA
GENUINE
Parts & Accessories

1X6MR-200SA

( )

9.9FMH/15FMH
PARTS CATALOGUE
©2023 by Yamaha Motor Co., Ltd.
1st edition, August 2023
All rights reserved.
Any reprinting or unauthorized use
without the written permission of
Yamaha Motor Co., Ltd.
is expressly prohibited.
Printed in Japan.

9.9FMH/15FMH
CATALOGO DE REPUESTOS
©2023 por Yamaha Motor Co., Ltd.
1ª edición, agosto 2023
Todos los derechos reservados.
Toda reproducción o uso no autorizado
sin el consentimiento escrito de
Yamaha Motor Co., Ltd.
quedan expresamente prohibidos
Impreso en Japón.

FOREWORD

This Parts Catalogue is related to the parts for the model(s) on the cover page. When you are ordering replacement parts, please refer to this Parts Catalogue and quote both part numbers and part names correctly.

1. Modifications or additions which have been made after the issue of the Parts Catalogue will be announced in the Parts News.
   It is advisable that you make the necessary corrections to the Parts Catalogue according to the Parts News.

2. Abbreviations
   The following abbreviations are used in this Parts Catalogue.
   "UR" Use specified parts number.
   "UN" Use as many as needed.
   "AP" Alternate Parts
   "LM" Locally Made (Parts need to be ordered locally)
   "F#" Frame No. (Applicable machine No.)
   "O/S" Over Size

3. The number of components for assembly
   - Parts, which are to be supplied in an assembly, are listed with a dot (.) in front of the part name as shown below.
   - The numeral appearing to the right of each component part indicates the quantity of parts for each assembly unit.

PART NO.	DESCRIPTION	Q'TY	REMARKS
2F5–83310–60	FRONT FLASHER LIGHT ASSY	2	
115–83311–60	.BULB (6V–18W)	1	

4. Applicable colours of graphics are represented in the "REMARKS" as shown below.

PART NO.	DESCRIPTION	Q'TY	REMARKS
2N4–24110–00–X5	FUEL TANK COMP.	2	MXR
3J1–24240–10	.GRAPHIC, FUEL TANK	1	FOR MXR

5. Note that the illustrations for reference in finding parts numbers are not to be used for assembling. When assembling, please use the applicable service manual.

6. The asterisk (*) before a reference number indicates modified items after the first edition.

7. Applicable Serial No.
   Engine Serial No.

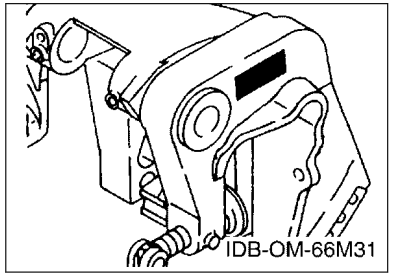

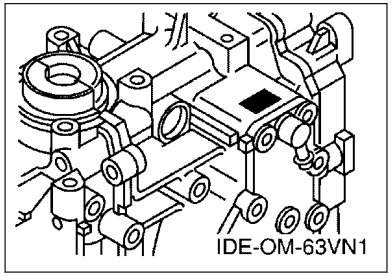

8. Applicable Engine Starting Serial No.

Model	Serial No.	Model	Serial No.
9.9F	682K-1063724	15F	684K-1193084

9. Applicable Colour Code

Abbreviation	Colour Name	Colour Code
DBN1	DARK BLUISH GRAY 1	008D

10. Quantity Column Information

Column No.	Name Of Q'ty Column	Applicable Model
1	6MR1	9.9FMH
2	63WP	15FMH

PROLOGO

Este catálogo de repuestos corresponde a las piezas para el o los modelos que figuran en la página de portada. Al formular el pedido de repuestos, se ruega citar este catálogo y especificar correctamente el número y el nombre de las piezas.

1. Las modificaciones y agregados que se hayan realizado después de la edición de este Catálogo de Repuestos, serán anunciados en las Informaciones de Recambios.
   Es recomendable que se hagan las correcciones necesarias en el Catálogo de Repuestos de acuerdo con las Informaciones de Recambios.

2. Abreviaciones
   En este. Catálogo de Repuestos se emplean las siguientes abreviaciones.
   "UR" Usar el número de partes especificado
   "UN" Usar la cantidad necesaria
   "AP" Piezas sustitutivas
   "LM" Fabricación local (Hay que pedir los repuestos en las cercanías)
   "F#" Nº de bastidor (Nº aplicable a la máquina)
   "O/S" Sobredimensionado

3. La cantidad de componentes para el montaje
   - Los componentes, suministrados como conjunto, se describen con un punto (.) que precede al nombre del parte como se indica a continuación.
   - La numeración que aparece a la derecha de cada descripción indica la cantidad de partes por cada unidad de conjunto.

CODIGO Nº	DESCRIPCION	CANT.	OBSERVACIONES
2F5–83310–60	ENSAMBLAJE DE LA LUZ	2	
115–83311–60	.BOMBILLA (6V–18W)	1	

4. Los colores de los componentes se indican como sigue en la columna de "OBSERVACIONES".

CODIGO Nº	DESCRIPCION	CANT.	OBSERVACIONES
2N4–24110–00–X5	COMP. DEL TANQUE	2	MXR
3J1–24240–10	.GRAFICO, DEL TANQUE	1	PARA MXR

5. Debe tenerse en cuenta que las ilustraciones sirven como guia para la búsqueda de los números de partes y no deben usarse para el montaje. Durante el montaje, se recomienda usar el manual de taller correspondiente.

6. EL asterisco (*) antes del número de referencia indica los elementos modificados después de la primera edición.

7. Números de serie
   Nº de Serie del motor

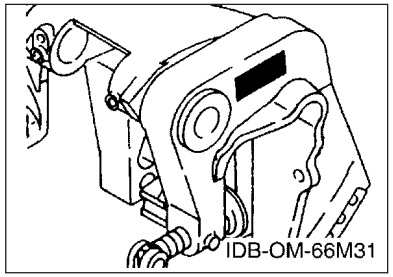

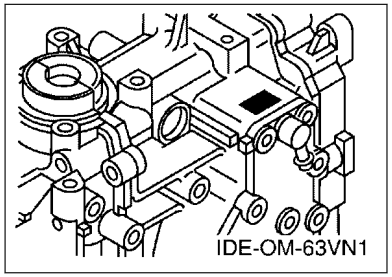

8. Números de serie del motor

Modelo	Nº de serie	Modelo	Nº de serie
9.9F	682K-1063724	15F	684K-1193084

9. Códigos de color aplicables

Abreviatura	Nombre de color	Código de color
DBN1	DARK BLUISH GRAY 1	008D

10. Informacion para la columna de cantidades

Columna Nº	Nombre de la columna de cantidades	Modelo aplicable
1	6MR1	9.9FMH
2	63WP	15FMH

CONTENTS

SCHEDULED SERVICE PARTS.....1
TOP COWLING.....2
CYLINDER & CRANKCASE.....3
CRANKSHAFT & PISTON.....5
INTAKE.....7
CARBURETOR.....8
FUEL.....10
STARTER.....11
GENERATOR.....13
ELECTRICAL.....14
BOTTOM COWLING.....15
STEERING.....16
CONTROL.....18
REMO CON ATTACHMENT.....20
BRACKET 1.....21
BRACKET 2.....23
UPPER CASING.....24
LOWER CASING & DRIVE 1.....25
LOWER CASING & DRIVE 2.....28
FUEL TANK.....30
OPTIONAL PARTS 1.....31
OPTIONAL PARTS 2.....32
REPAIR KIT 1.....33
REPAIR KIT 2.....34

INDEX

NUMERICAL INDEX.....35

CONTENIDO

PARTES DE REPUESTO TEMPORALES..... 1
SOPORTE SUPERIOR..... 2
CYLINDRO & CARTER..... 3
CIGUENAL & PISTON.....5
ADMISION.....7
CARBURADOR..... 8
COMBUSTIBLE..... 10
ARRANQUE..... 11
GENERADOR.....13
ELECTRICO..... 14
CUBIERTA INFERIOR..... 15
DIRECCION.....16
CONTROL..... 18
CONJUNTO ADITAMENTO..... 20
SOPORTE 1..... 21
SOPORTE 2..... 23
FUNDA SUPERIOR.....24
IMPULSOR E INFERIOR 1..... 25
IMPULSOR E INFERIOR 2..... 28
DEPOSITO DE COMBUSTIBLE..... 30
PARTES OPCIONALES 1..... 31
PARTES OPCIONALES 2..... 32
ESTUCHE REPARATION 1..... 33
ESTUCHE REPARATION 2..... 34

INDICE

INDICE NUMERICO..... 35

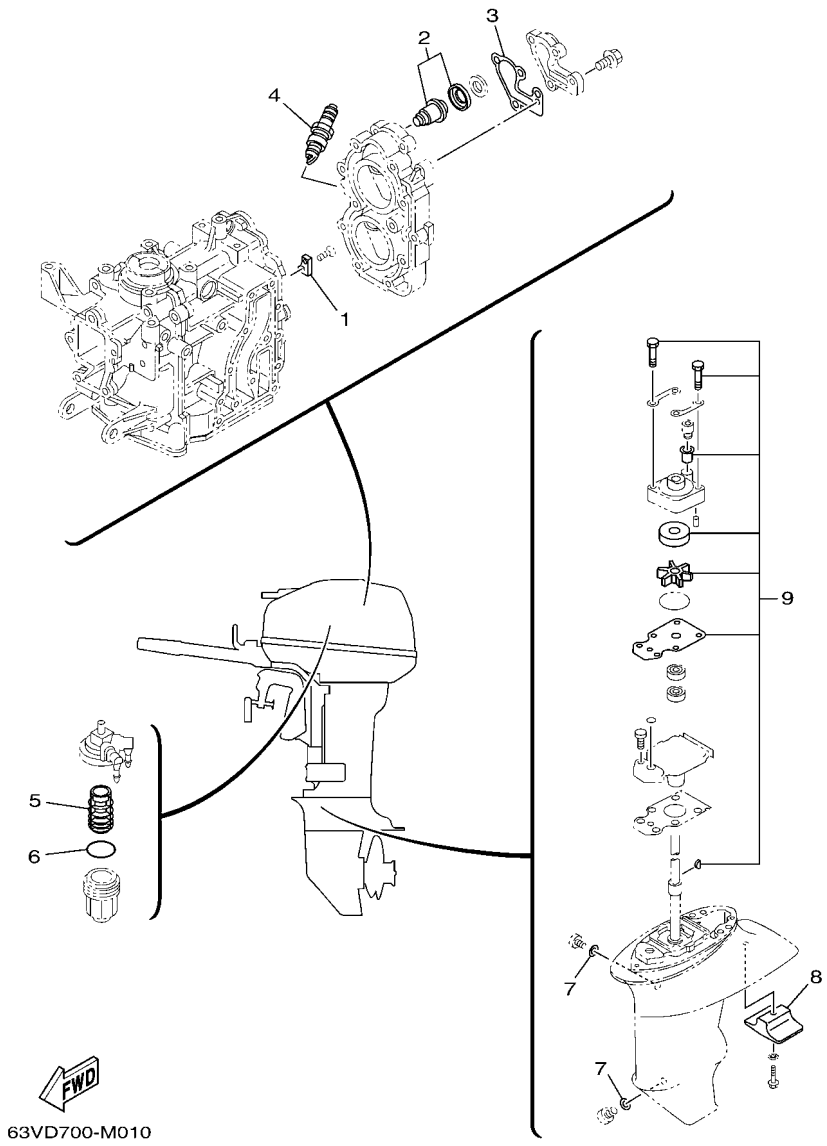

FIG. 1 SCHEDULED SERVICE PARTS — PARTES DE REPUESTO TEMPORALES

REF. NO.	PART NO. CODIGO Nº	DESCRIPTION DESCRIPCION	6MR1	63WP				REMARKS OBSERVACIONES
1	682–11325–00	ANODE ANODO	1	1				
2	6E5–12411–30	THERMOSTAT TERMOSTAT	1	1				
3	682–12414–A1	GASKET, COVER EMPAQUE	1	1				
4	94702–00217	PLUG, SPARK (NGK B7HS-10) BUJIA (NGK B7HS-10)	2	2				UR UR
	94702–00271	PLUG, SPARK (NGK BR7HS-10) BUJIA (NGK BR7HS-10)	2	2				UR FOR CHN,AFR UR FOR CHN,AFR
5	61N–24563–00	ELEMENT, FILTER ELEMENTO DEL FILTRO	1	1				
6	93210–32738	O-RING ANILLO O	1	1				
7	90430–08003	GASKET JUNTA	2	2				
8	61N–45251–01	ANODE CATODE	1	1				
9	63V–W0078–04	WATER PUMP REPAIR KIT ESTUCHE REPARACION BOMBA AGUA	1	1				

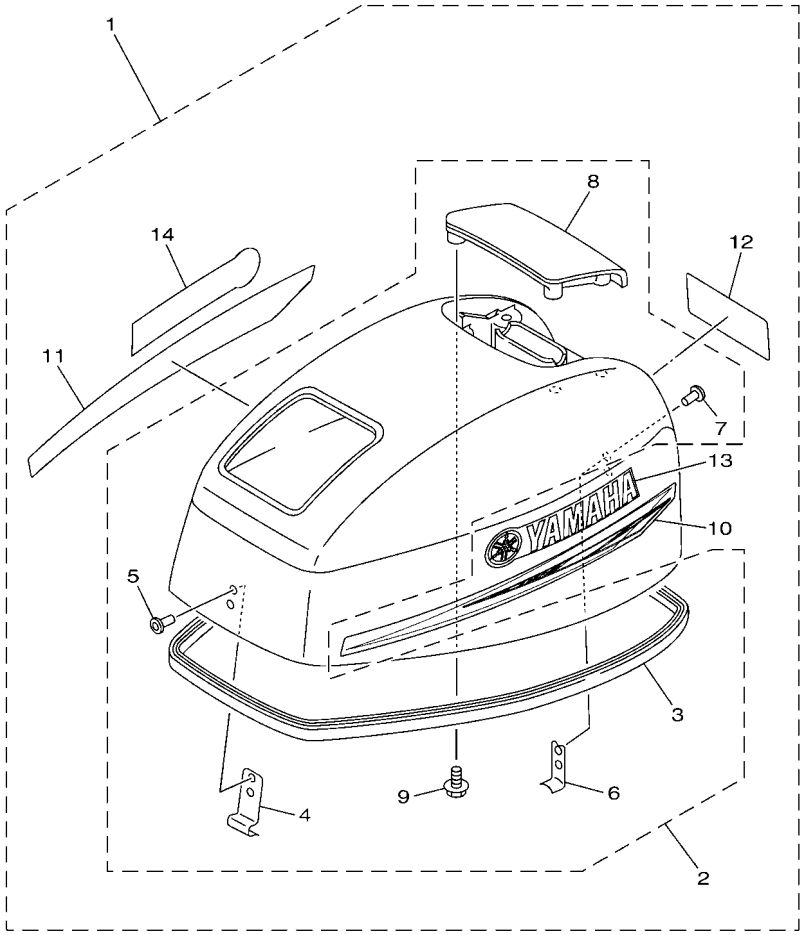

63VL300-R020

FIG. 2 TOP COWLING — SOPORTE SUPERIOR

REF. NO.	PART NO. CODIGO Nº	DESCRIPTION DESCRIPCION	6MR1	63WP				REMARKS OBSERVACIONES
1	63V–42610–03	TOP COWLING ASSY SOPORTE SUPERIOR COMPL.	1					
	63W–42610–03	TOP COWLING ASSY SOPORTE SUPERIOR COMPL.		1				
2	63V–4261A–01	.TOP COWLING W/O GRAPHICS .SOPORTE SUPERIOR SIN GRAFICOS	1	1				
3	63V–42615–00	..SEAL ..SELLO	1	1				
4	6G1–42651–02	..HOOK ..GANCHO	1	1				
5	90266–04M04	..RIVET ..REMACHE	2	2				
6	6L2–42647–00	..HOLDER, CLAMP BAND ..MORDAZA DE ABRAZADERA	1	1				
7	90266–04M04	..RIVET ..REMACHE	2	2				
8	63V–42613–A0–8D	..MOLDING, AIR DUCT ..MOLDURA CONDUCTO AIRE	1	1				
9	97E95–06516	..BOLT, HEXAGON W/W DEEP RECESS ..TORNILLO HEXAGONAL CON RONDONA	4	4				
10	63V–42675–41	.GRAPHIC, SIDE 1 .CALCAMONIA LATERAL 1	1	1				
11	63V–42676–41	.GRAPHIC, SIDE 2 .CALCAMONIA LATERAL 2	1	1				
12	63V–42678–41	.GRAPHIC, REAR .CALCAMONIA TRASERA	1					
	63W–42678–40	.GRAPHIC, REAR .CALCAMONIA TRASERA		1				
13	6E0–42681–41	.MARK, COWLING .MARCA DE CUBIERTA	1	1				
14	6E0–42681–41	.MARK, COWLING .MARCA DE CUBIERTA	1	1				

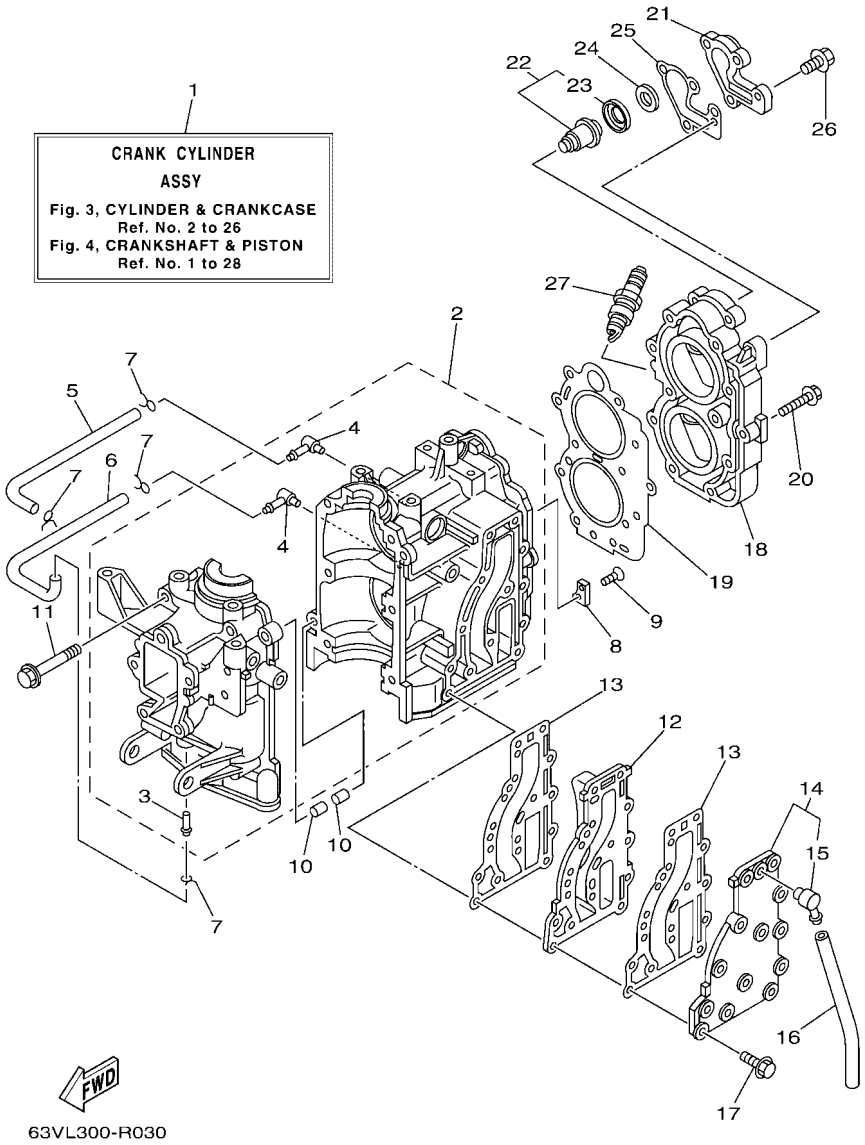

FIG. 3 CYLINDER & CRANKCASE — CYLINDRO & CARTER

REF. NO.	PART NO. CODIGO Nº	DESCRIPTION DESCRIPCION	6MR1	63WP				REMARKS OBSERVACIONES
1	63V–W0090–04–1S	CRANK CYLINDER ASSY BLOQUE MOTOR COMPLETO	1	1				
2	63V–15100–03	CRANKCASE ASSY CARTER COMPLETO	1	1				
3	624–14485–00	.PIPE, JOINT .TUBO DE UNION	1	1				
4	650–14485–03	.PIPE, JOINT .TUBO DE UNION	2	2				
5	90445–07M08	HOSE (L220) TUBO (L220)	1	1				
6	90445–07M08	HOSE (L220) TUBO (L220)	1	1				
7	90467–06016	CLIP PRESILLA	4	4				
8	682–11325–00	ANODE ANODO	1	1				
9	98780–05015	SCREW, FLAT HEAD TORNILLO, CABEZA PLANA	1	1				
10	93606–12019	PIN, DOWEL PASADOR DE CLAVIJA	2	2				
11	90119–08M07	BOLT, WITH WASHER TORNILLO CON ARANDELA	6	6				
12	63V–41111–00–1S	INNER COVER, EXHAUST CUBIERTA INTERIOR DE ESCAPE	1	1				
13	63V–41112–A0	GASKET, EXHAUST INNER COVER EMPAQUE	2	2				
14	63V–41113–00–1S	OUTER COVER, EXHAUST CUBOERTA EXTERIOR DE ESCAPE	1	1				
15	676–11372–00	.NIPPLE, HOSE .NIPLE DE MANGUERA	1	1				
16	90445–09104	HOSE (L300) TUBO (L300)	1	1				
17	90119–06MA4	BOLT, WITH WASHER TORNILLO CON ARANDELA	13	13				
18	6E7–11111–01–1S	HEAD, CYLINDER 1 CULATA CILINDRO 1	1	1				
19	63V–11181–A2	GASKET, CYLINDER HEAD 1 JUNTA, DE CULATA 1	1	1				
20	90105–07M05	BOLT, FLANGE TORNILLO	11	11				
21	682–12413–00–1S	COVER, THERMOSTAT CUBIERTA TERMOSTATO	1	1				
22	6E5–12411–30	THERMOSTAT TERMOSTAT	1	1				
23	688–12412–00	.SEAL, THERMOSTAT .SELLO TERMOSTATO	1	1				
24	90201–16M03	WASHER, PLATE ARANDELA PLANA	1	1				
25	682–12414–A1	GASKET, COVER EMPAQUE	1	1				
26	90119–06MA2	BOLT, WITH WASHER TORNILLO CON ARANDELA	4	4				
27	94702–00217	PLUG, SPARK (NGK B7HS-10) BUJIA (NGK B7HS-10)	2	2				

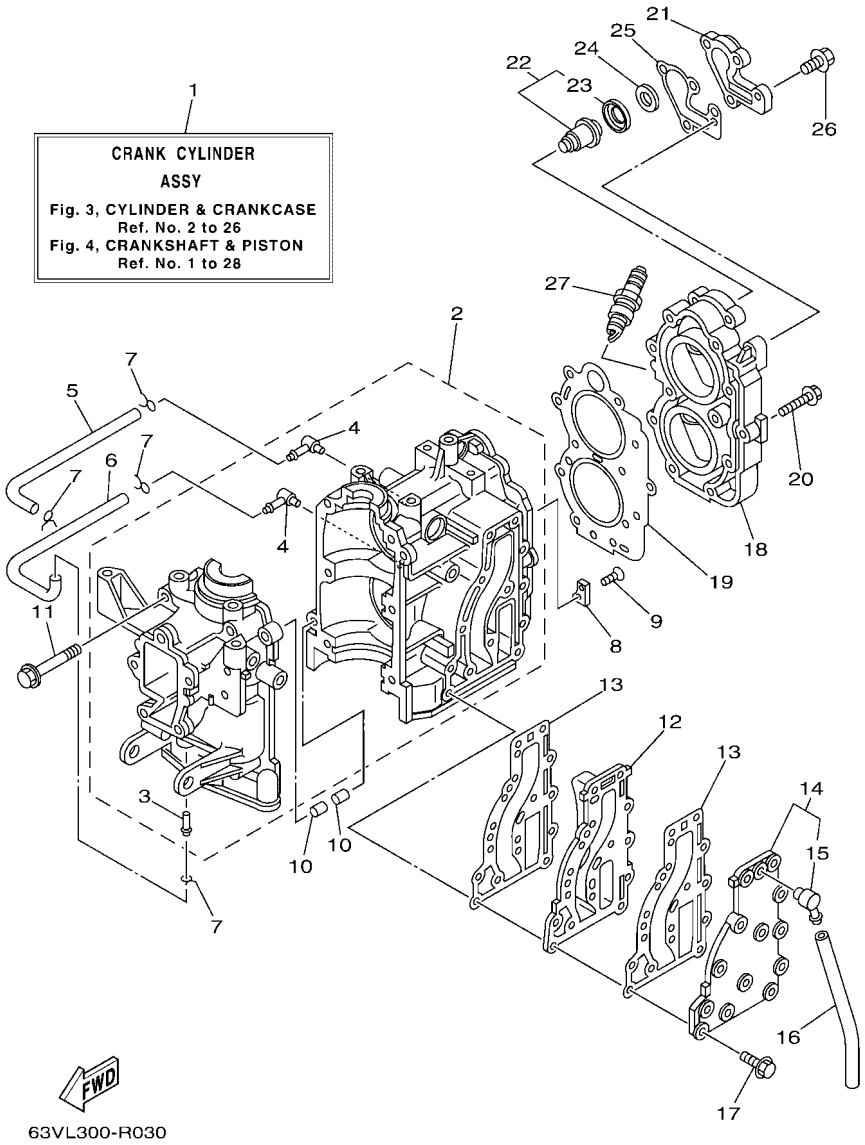

FIG. 3 CYLINDER & CRANKCASE — CYLINDRO & CARTER

REF. NO.	PART NO. CODIGO Nº	DESCRIPTION DESCRIPCION	6MR1	63WP				REMARKS OBSERVACIONES
27	94702–00271	PLUG, SPARK (NGK BR7HS-10) BUJIA (NGK BR7HS-10)	2	2				FOR CHN,AFR FOR CHN,AFR

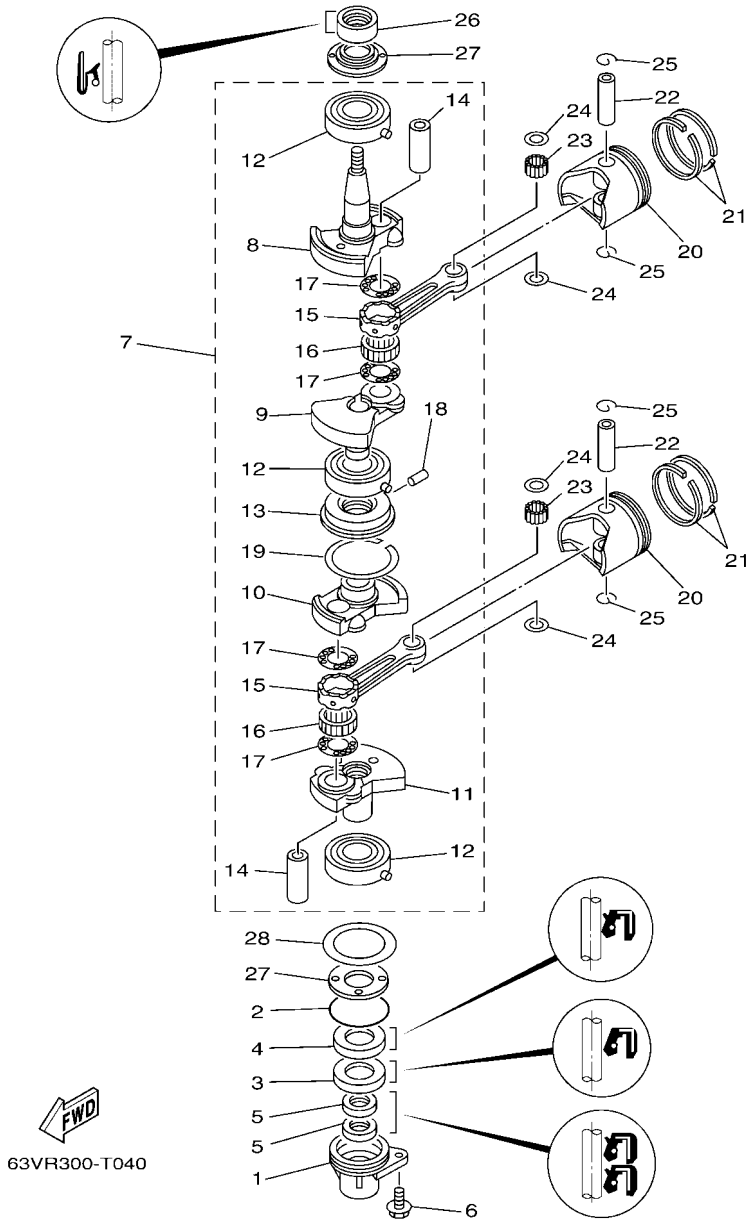

FIG. 4 CRANKSHAFT & PISTON — CIGUENAL & PISTON

REF. NO.	PART NO. CODIGO Nº	DESCRIPTION DESCRIPCION	6MR1	63WP				REMARKS OBSERVACIONES
1	63V–15396–01–CA	HOUSING, OIL SEAL CAJA DE SELLO DE ACEITE	1	1				
2	93210–46M16	O-RING ANILLO O	1	1				
3	93101–25018	OIL SEAL SELLO ACEITE	1	1				
4	93102–25M48	OIL SEAL SELLO ACEITE	1	1				
5	93101–13018	OIL SEAL SELLO ACEITE	2	2				
6	97E95–06516	BOLT, HEXAGON W/W DEEP RECESS TORNILLO HEXAGONAL CON RONDONA	1	1				
7	63V–11400–02	CRANKSHAFT ASSY CIGUENAL COMPLETO	1	1				
8	63V–11412–01	.CRANK 1 .MANIVELA 1	1	1				
9	63V–11422–01	.CRANK 2 .MANIVELA 2	1	1				
10	63V–11432–01	.CRANK 3 .MANIVELA 3	1	1				
11	63V–11442–01	.CRANK 4 .MANIVELA 4	1	1				
12	93306–205U7	.BEARING .COJINETE	3	3				
13	63V–11515–02	.SEAL, LABYRINTH 1 .SELLO LABERINTO 1	1	1				
14	682–11681–00	.PIN, CRANK 1 .PASADOR MANIVELA 1	2	2				
15	6K4–11651–00	.ROD, CONNECTING .BIELA	2	2				
16	93310–620V5	.BEARING .COJINETE DE RODILLOS	2	2				
17	90209–20M23	.WASHER .ARANDELA DE SEPARACION	4	4				
18	91609–20008	.PIN, SPRING .PASADOR DE RESORTE	1	1				
19	93440–52009	.CIRCLIP .SEGURO	1	1				
20	6E7–11631–00–97	PISTON (STD) PISTON (NORMA)	2	2				
	6E7–11635–00	PISTON (0.25MM O/S) PISTON (0.25MM O/S)	2	2				AP AP
	6E7–11636–00	PISTON (0.50MM O/S) PISTON (0.50MM O/S)	2	2				AP AP
21	682–11610–01	PISTON RING SET (STD) JUEGO DE ANILLOS (NORMA)	2	2				
	682–11610–11	PISTON RING SET (0.25MM O/S) JUEGO DE ANILLOS (0.25MM O/S)	2	2				AP AP
	682–11610–21	PISTON RING SET (0.50MM O/S) JUEGO DE ANILLOS (0.50MM O/S)	2	2				AP AP
22	634–11633–00	PIN, PISTON PASADOR, PISTON	2	2				
23	93602–14104	PIN, DOWEL PASADOR DE CLAVIJA	50	50				

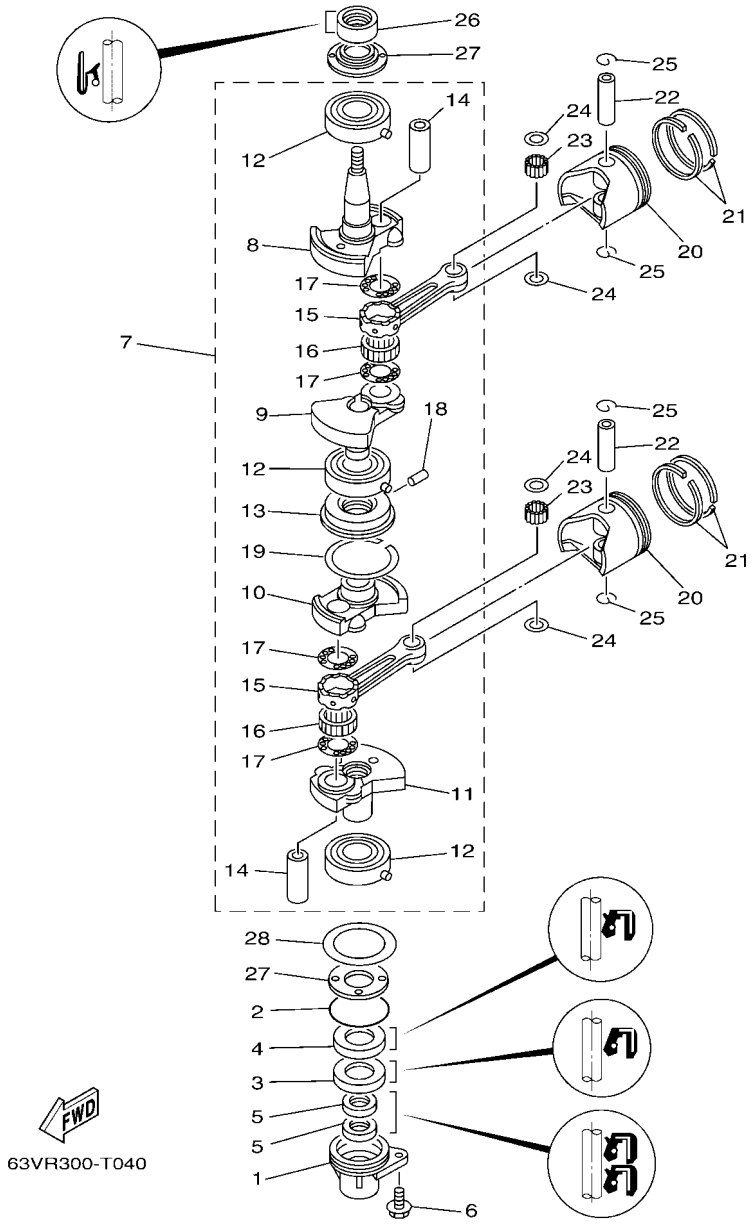

FIG. 4 CRANKSHAFT & PISTON — CIGUENAL & PISTON

REF. NO.	PART NO. CODIGO Nº	DESCRIPTION DESCRIPCION	6MR1	63WP				REMARKS OBSERVACIONES
24	90201–14377	WASHER, PLATE ARANDELA PLANA	4	4				
25	93450–15023	CIRCLIP SEGURO	4	4				
26	93110–23M00	OIL SEAL SELLO ACEITE	1	1				
27	63V–11445–00	SPACER ESPACIADOR	2	2				
28	90201–46M29	WASHER, PLATE ARANDELA PLANA	1	1				

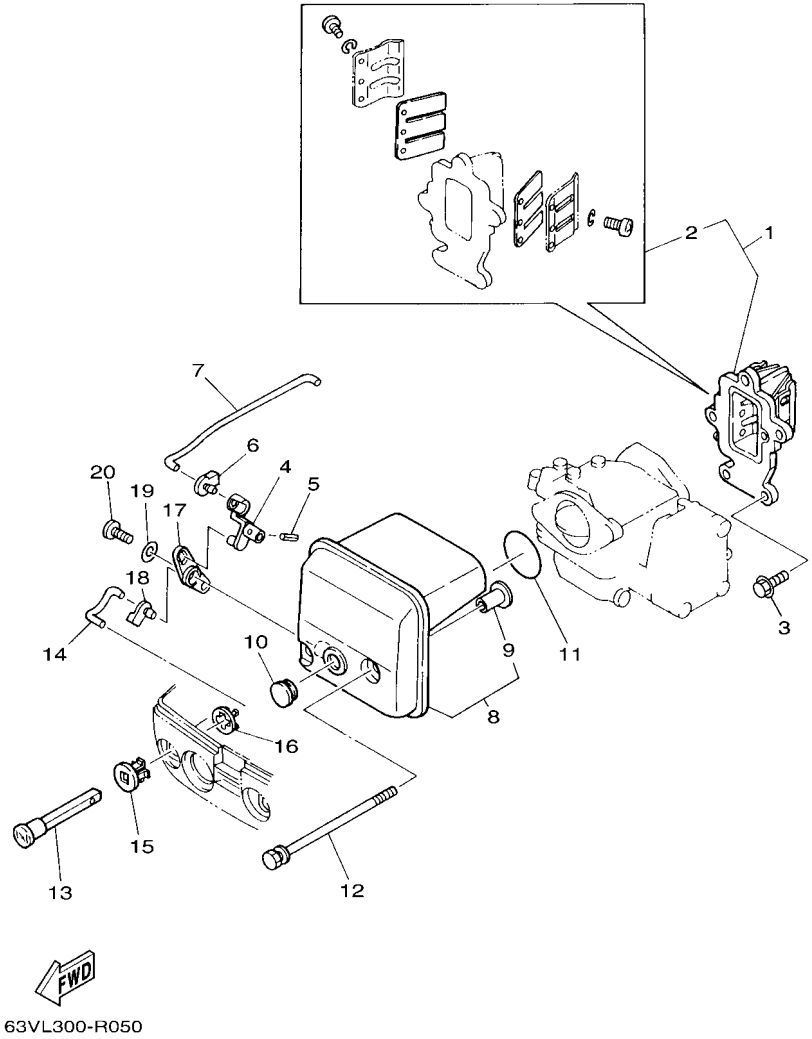

FIG. 5 INTAKE — ADMISION

REF. NO.	PART NO. CODIGO Nº	DESCRIPTION DESCRIPCION	6MR1	63WP				REMARKS OBSERVACIONES
1	63V–13610–10	REED VALVE ASSY VALVULA DE LAMINAS COMPLETA	1					
	63W–13610–00	REED VALVE ASSY VALVULA DE LAMINAS COMPLETA		1				
2	682–W0004–00	.REED SET .JUEGO DE VALVULAS DE LENGUETA	1	1				
3	97E95–06520	BOLT, HEXAGON W/W DEEP RECESS TORNILLO HEXAGONAL CON RONDONA	3	3				
4	63V–41253–00	LEVER, CHOKE PALANCA AHOGADOR	1	1				
5	91690–20010	PIN, SPRING PASADOR DE RESORTE	1	1				
6	63V–41262–00	JOINT, CHOKE LEVER CONECTOR DE AHOGADOR	1	1				
7	63V–41257–00	ROD, CHOKE 2 VARILLA DE AHOGADOR	1	1				
8	63V–14440–A0	SILENCER ASSY, INTAKE SILENCIADOR COMPL DE ADMISION	1	1				
9	90387–06M15	.COLLAR .ESPACIADOR	2	2				
10	90480–12M25	GROMMET TAPON	1	1				
11	93210–35M86	O-RING ANILLO O	1	1				
12	90119–06308	BOLT, WITH WASHER TORNILLO CON ARANDELA	2	2				
13	6H4–41271–02	KNOB, CHOKE PERILLA AHOGADOR	1	1				
14	63V–41256–00	ROD, CHOKE 1 VARILLA DE AHOGADOR	1	1				
15	689–41273–00	GROMMET TAPON PROTECTOR	1	1				
16	6J8–41274–01	GROMMET 2 TAPON 2	1	1				
17	63V–41252–00	LEVER, CHOKE 1 PALANCA AHOGADOR 1	1	1				
18	661–41262–02	JOINT, CHOKE LEVER CONECTOR DE AHOGADOR	1	1				
19	90201–05M09	WASHER, PLATE ARANDELA PLANA	1	1				
20	90164–05M03	SCREW, TAPPING TORNILLO ROSCA HEMBRA	1	1				

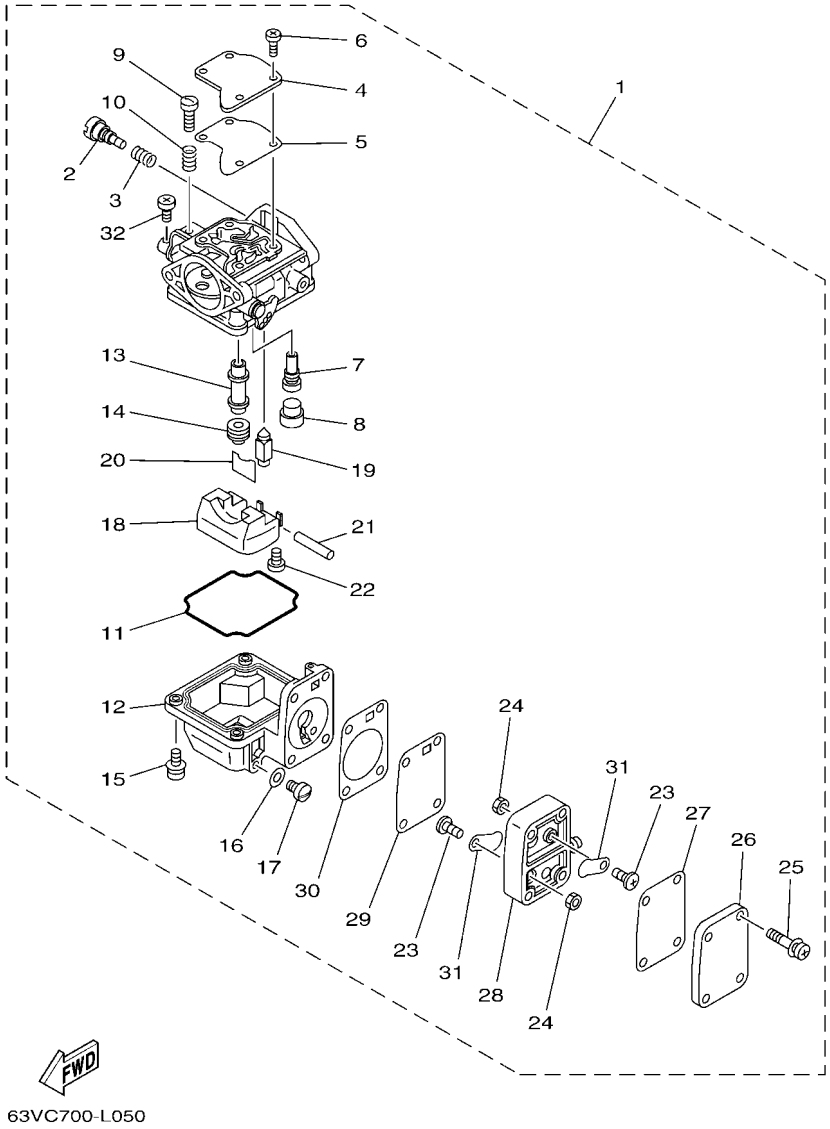

FIG. 6 CARBURETOR — CARBURADOR

REF. NO.	PART NO. CODIGO Nº	DESCRIPTION DESCRIPCION	6MR1	63WP				REMARKS OBSERVACIONES
1	63V–14301–03	CARBURETOR ASSY 1 CARBURADOR COMPLETO 1	1	1				
2	679–14923–01	.SCREW, PILOT .TORNILLO DE AJUSTE	1	1				
3	697–14555–00	.SPRING .RESORTE	1	1				
4	63V–14527–00	.PLATE .PLACA	1	1				
5	63V–14126–00	.GASKET .EMPAQUE	1	1				
6	65L–14565–00	.SCREW .TORNILLO	4	4				
7	6G1–14948–06	.JET (#48) .INYECTOR (#48)	1	1				
8	679–14966–00	.RUBBER CAP .TAPA	1	1				
9	63V–14523–00	.SCREW, STOP .TORNILLO DE TOPE	1	1				
10	90501–10326	.SPRING, COMPRESSION .RESORTE DE COMPRESION	1	1				
11	63V–14984–00	.GASKET, FLOAT CHAMBER .EMPAQUE CAMARA DE BOIA	1	1				
12	63V–14980–02	.BODY, FLOAT CHAMBER .CUERPO CAMARA DE BOIA	1	1				
13	63V–14947–00	.JET, NEEDLE .INYECTOR DE AGUJA	1	1				
14	676–14943–29	.JET, MAIN (#110) .INYECTOR PRINCIPAL (#110)	1	1				
15	97980–04114	.SCREW, WITH WASHER .TORNILLO, CON ARANDELA	4	4				
16	65W–14398–00	.GASKET .EMPAQUE	1	1				
17	65W–14992–09	.SCREW, DRAIN .TORNILLO DE DRENAJE	1	1				
18	63V–14985–00	.FLOAT .BOIA	1	1				
19	6AH–14546–00	.VALVE, NEEDLE .VALVULA DE AGUJA	1	1				
20	633–14159–00	.CLIP .PRESILLA	1	1				
21	6H4–14548–00	.PIN, FLOAT ARM .PASADOR DE BRAZO DE BOIA	1	1				
22	98580–04008	.SCREW, PAN HEAD .TORNILLO DE CABEZA CRUZADA	1	1				
23	98980–03006	.SCREW, BIND .TORNILLO DE LIGAR	2	2				
24	95380–03600	.NUT .TUERCA	2	2				
25	97980–04123	.SCREW, WITH WASHER .TORNILLO, CON ARANDELA	4	4				
26	6G1–24452–00	.COVER .CUBIERTA	1	1				
27	63V–24411–00	.DIAPHRAGM .DIAFRAGMA	1	1				

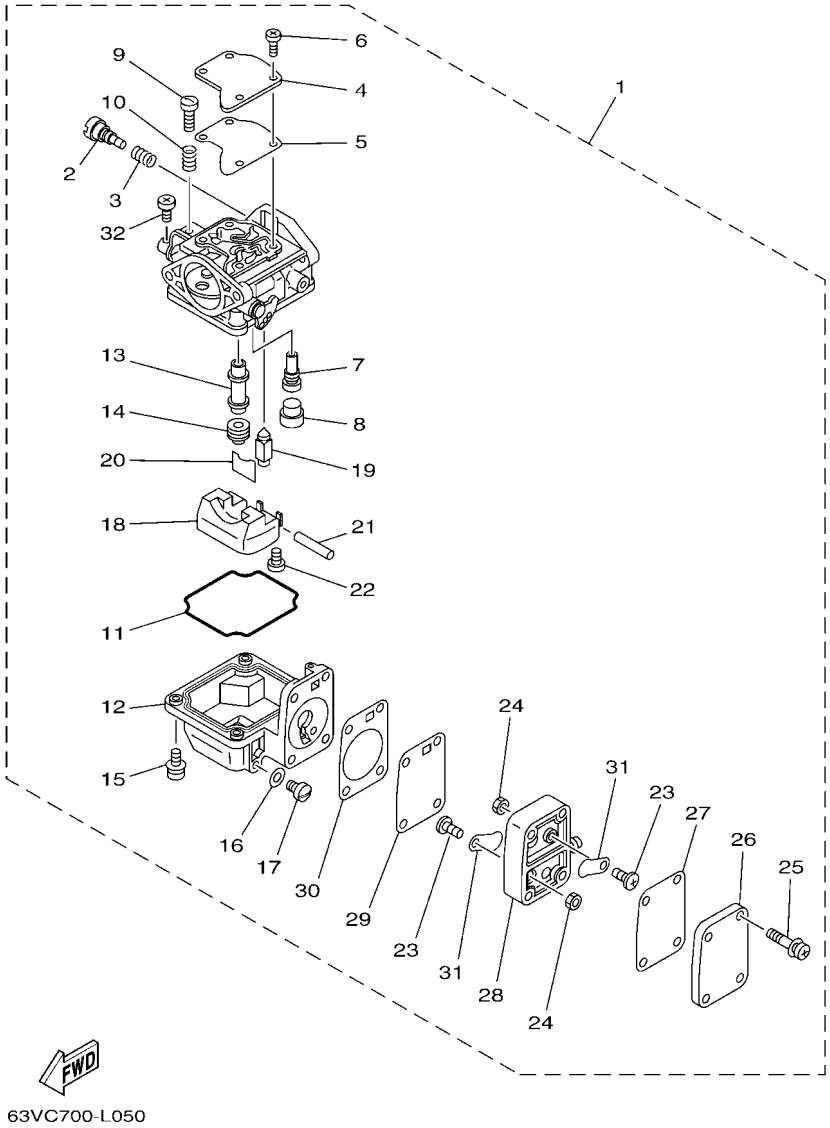

FIG. 6 CARBURETOR — CARBURADOR

REF. NO.	PART NO. CODIGO Nº	DESCRIPTION DESCRIPCION	6MR1	63WP				REMARKS OBSERVACIONES
28	6G1–24412–01	.BODY 1 .CUERPO 1	1	1				
29	6G1–24411–00	.DIAPHRAGM .DIAFRAGMA	1	1				
30	6G1–24431–01	.GASKET, FUEL PUMP 1 .EMPAQUE BOMBA COMBUST 1	1	1				
31	6L5–24421–00	.VALVE, CHECK .VALVULA DE RETENCION	2	2				
32	98580–04006	.SCREW, PAN HEAD .TORNILLO DE CABEZA CRUZADA	1	1				

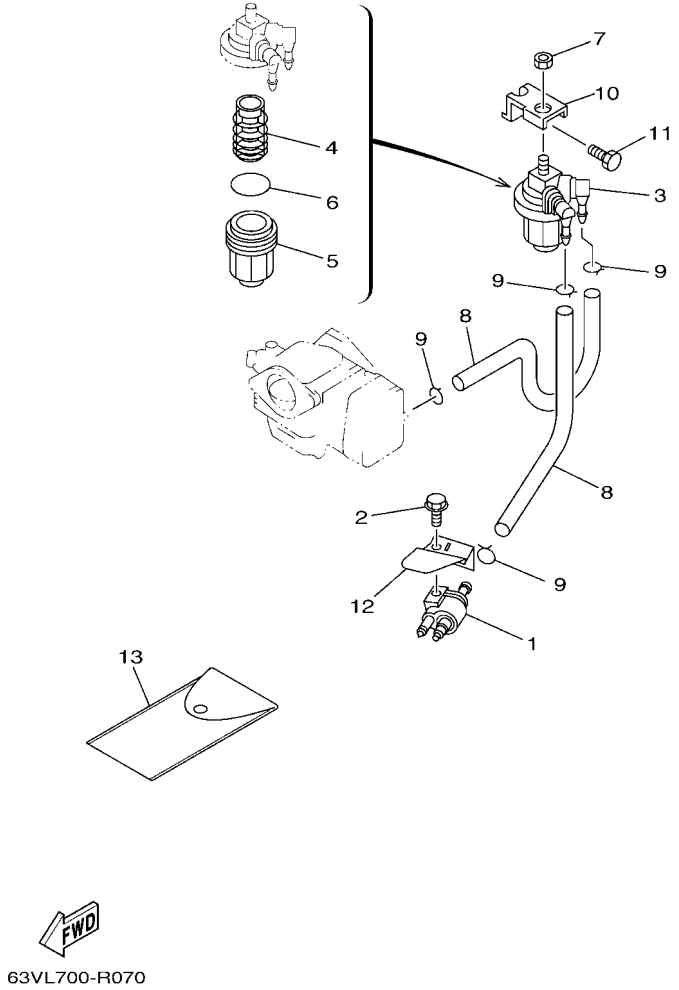

FIG. 7 FUEL COMBUSTIBLE

REF. NO.	PART NO. CODIGO Nº	DESCRIPTION DESCRIPCION	6MR1	63WP				REMARKS OBSERVACIONES
1	6G1–24304–10	FUEL PIPE JOINT COMP. 1 CONECTOR MANGUERA COMBUST.1	1	1				
2	97E95–06520	BOLT, HEXAGON W/W DEEP RECESS TORNILLO HEXAGONAL CON RONDONA	1	1				
3	61N–24560–00	FILTER ASSY FILTRO COMPLETO	1	1				
4	61N–24563–00	.ELEMENT, FILTER .ELEMENTO DEL FILTRO	1	1				
5	61N–24521–00	.CUP, FILTER .COPA DE FILTRO	1	1				
6	93210–32738	.O-RING .ANILLO O	1	1				
7	95380–08600	NUT TUERCA	1	1				
8	90445–09M00	HOSE (L180) TUBO (L180)	2	2				
9	90467–08004	CLIP PRESILLA	4	4				
10	682–24566–01	BRACKET, FILTER SOPORTE DEL FILTRO	1	1				
11	97013–06010	BOLT PERNO	1	1				
12	63V–24396–01	PLATE PLACA	1	1				
13	656–W2810–03	TOOL KIT JUEGO DE HERRAMIENTAS	1	1				

FIG. 8 STARTER ARRANQUE

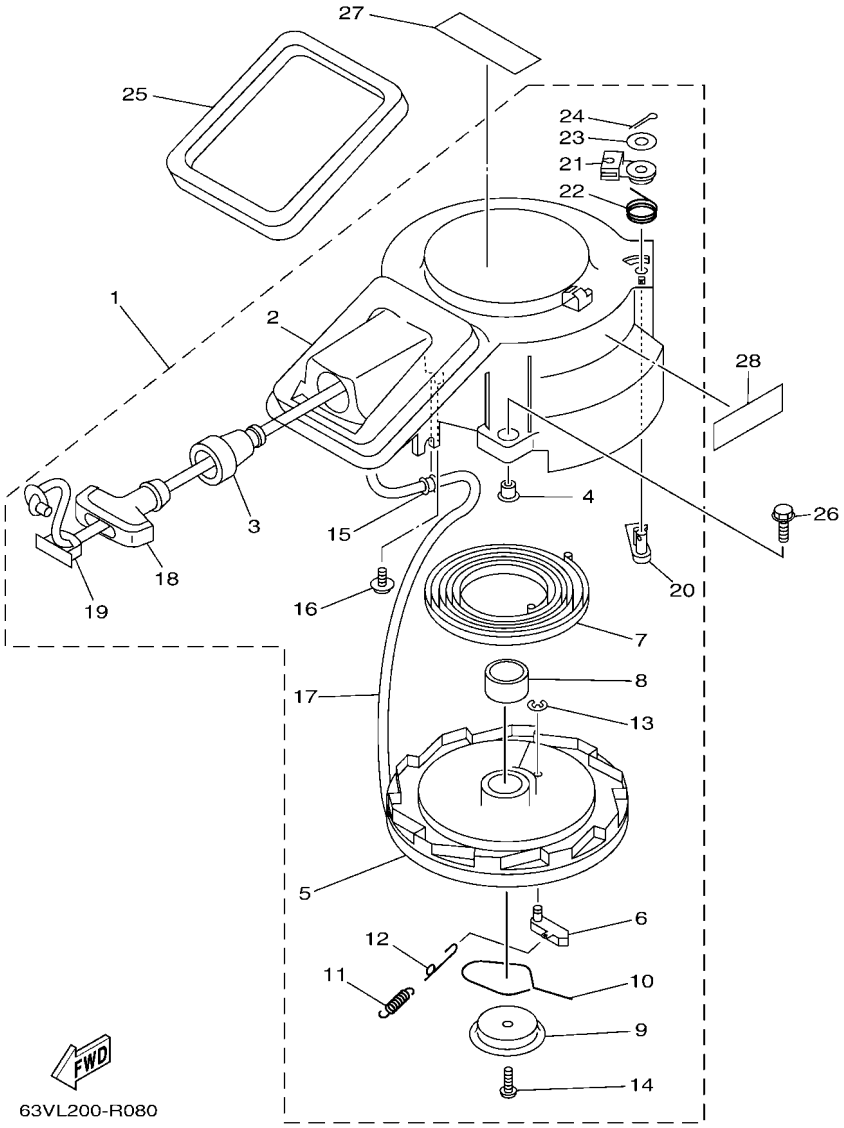

*1:CUT FROM 50M ROLLS,PART NO.90890-44373,CUTTING LENGTH 1.8M

*1:CORTE DE UN RODILLO DE 50M , PARTS NUMERO 90890-44373, LARGO DEL CORTE 1.8M

REF. NO.	PART NO. CODIGO Nº	DESCRIPTION DESCRIPCION	6MR1	63WP				REMARKS OBSERVACIONES
1	63V–15710–21	STARTER ASSY ARRANQUE COMPLETO	1	1				WITH SAFETY DEVICE WITH SAFETY DEVICE
2	63V–15711–10	.CASE, STARTER .CAJA DE ARRANQUE	1	1				
3	63V–15795–01	.GUIDE, ROPE .GUIA DE CUEEDA	1	1				
4	90387–06M05	.COLLAR .ESPACIADOR	3	3				
5	63V–15714–00	.DRUM, SHEAVE .TAMBOR ROLDANA	1	1				
6	63V–15741–00	.PAWL, DRIVE .TRINQUETE DE TRACCION	1	1				
7	63V–15713–00	.SPRING, STARTER .RESORTE DE ARRANQUE	1	1				
8	63V–15753–00	.BUSH .BUJE	1	1				
9	63V–15716–10	.PLATE, DRIVE .PLACA DE TRACCION	1	1				
10	63V–15705–10	.SPRING, DRIVE PAWL .RESORTE	1	1				
11	63V–15767–01	.SPRING .RESORTE	1	1				
12	68T–15784–00	.SPRING, RETURN .RESORTE DE RETORNO	1	1				
13	63V–15744–00	.CIRCLIP .SEGURO	1	1				
14	68T–15793–00	.SCREW .TORNILLO	1	1				
15	63V–15764–00	.COLLAR 1 .COLLAR 1	1	1				
16	63V–15793–00	.SCREW .TORNILLO	1	1				
17	*	.WIRE, STARTER (L:1800MM) .CUERDA DE ARRANQUE (L:1800MM)	1	1				*1 *1
18	6G1–15755–00	.HANDLE, STARTER .MANIJA DE ARRANQUE	1	1				
19	6G1–15779–00	.COVER .CUBIERTA	1	1				
20	63V–15794–00	.STOPPER .TOPE	1	1				
21	63V–15748–00	.PLUNGER, STARTER STOP .EMBOLO SEGURO DE ARRANQUE	1	1				
22	63V–15734–00	.SPRING, RETURN .RESORTE DE RETORNO	1	1				
23	63V–15726–00	.WASHER, FLAT .ARANDELA PLANA	1	1				
24	91490–16018	.PIN. COTTER .CHAVETA	1	1				
25	63V–15762–00	SEAL, RUBBER 2 SELLO DE GOMA 2	1	1				
26	97E95–06520	BOLT, HEXAGON W/W DEEP RECESS TORNILLO HEXAGONAL CON RONDONA	3	3				
27	6EE–81995–40	LABEL, WARNING ETIQUETA DE PRECAUCION	1	1				

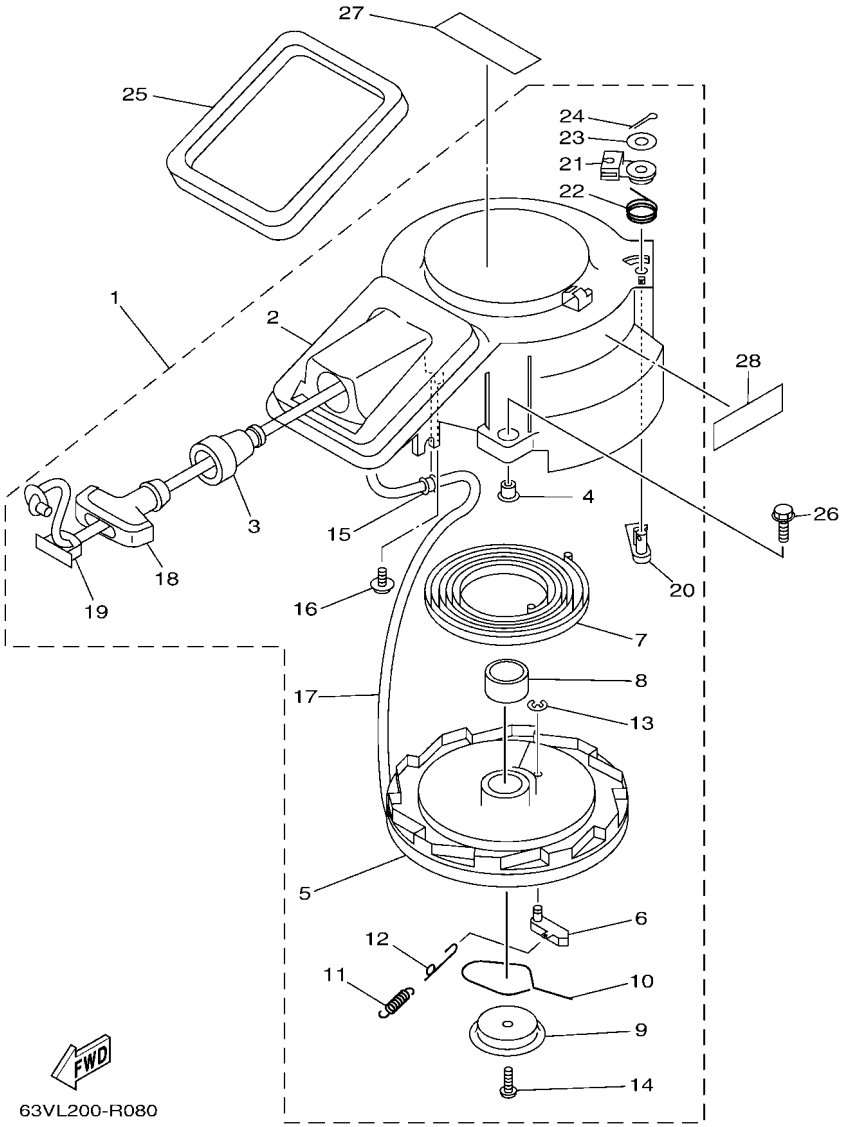

*1:CUT FROM 50M ROLLS,PART NO.90890-44373,CUTTING LENGTH 1.8M

*1:CORTE DE UN RODILLO DE 50M , PARTS NUMERO 90890-44373, LARGO DEL CORTE 1.8M

FIG. 8 STARTER ARRANQUE

REF. NO.	PART NO. CODIGO Nº	DESCRIPTION DESCRIPCION	6MR1	63WP				REMARKS OBSERVACIONES
28	6EE–81994–40	LABEL, SAFETY ETIQUETA DE SEGURIDAD	1	1				

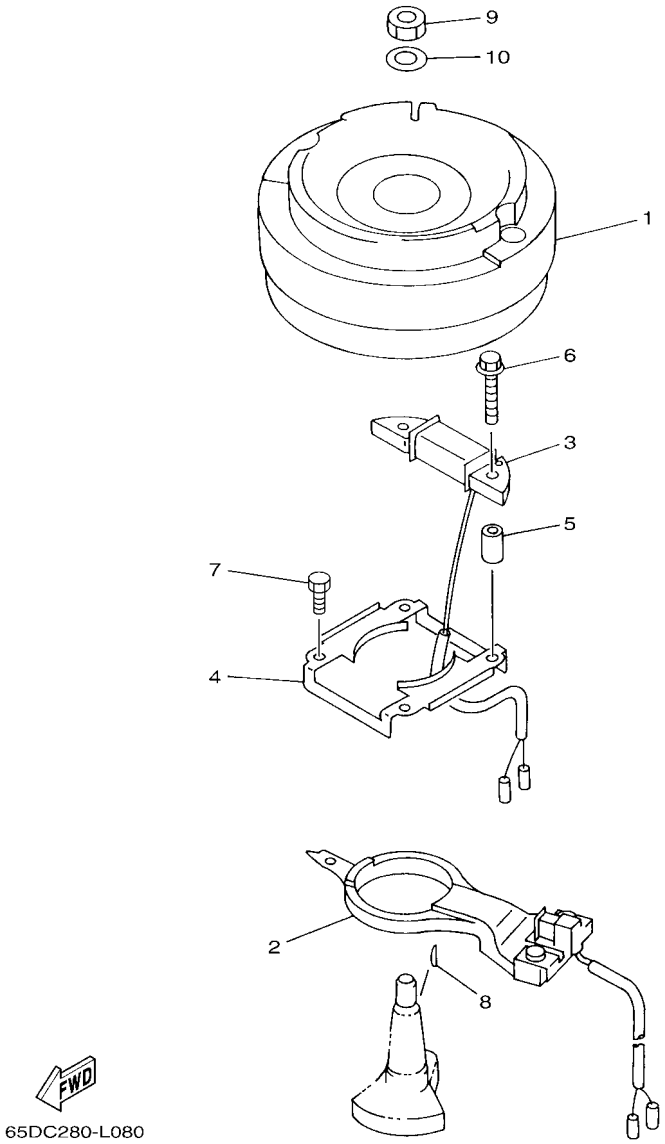

FIG. 9 GENERATOR GENERADOR

REF. NO.	PART NO. CODIGO Nº	DESCRIPTION DESCRIPCION	6MR1	63WP				REMARKS OBSERVACIONES
1	63V–85550–11	ROTOR ASSY ROTOR COMPLETO	1	1				
2	63V–85580–01	COIL, PULSER BOBINA DE PULSACION	1	1				
3	63V–85520–01	COIL, CHARGE BOBINA DE CARGA	1	1				
4	63V–41611–00	RETAINER, MAGNETO BASE RETENEDOR BASE MAGNETO	1	1				
5	90387–06M53	COLLAR ESPACIADOR	2	2				
6	90105–06M68	BOLT, FLANGE TORNILLO	2	2				
7	95023–06012	BOLT TORNILLO	2	2				
8	90280–05013	KEY, WOODRUFF CUNA WOODRUFF	1	1				
9	90170–12066	NUT TUERCA	1	1				
10	90201–12472	WASHER, PLATE ARANDELA PLANA	1	1				

FIG. 10 ELECTRICAL — ELECTRICO

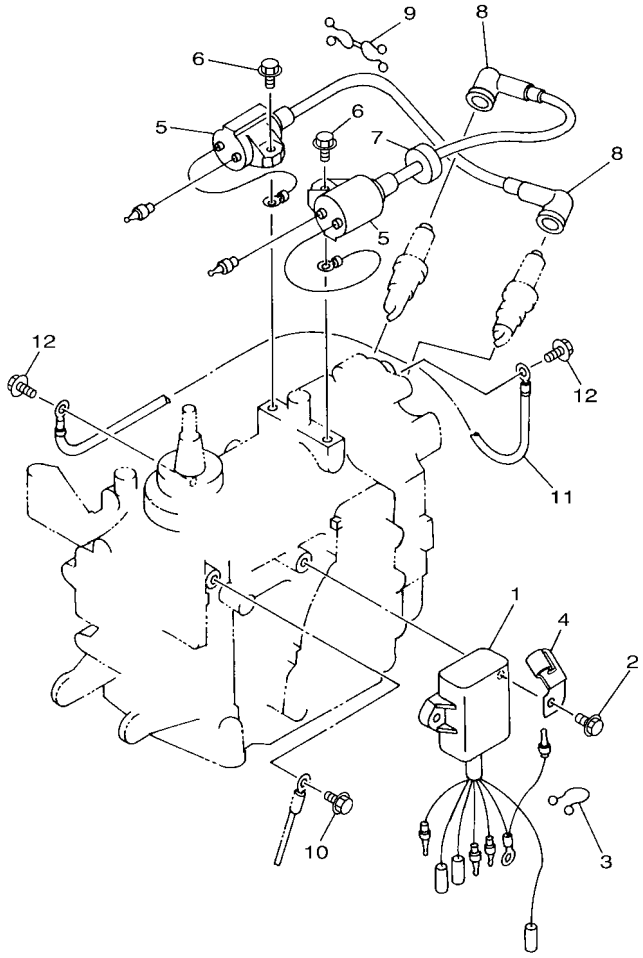

65DM280-T100

REF. NO.	PART NO. CODIGO Nº	DESCRIPTION DESCRIPCION	6MR1	63WP				REMARKS OBSERVACIONES
1	63V–85540–03	C.D.I. UNIT ASSY UNIDAD C.D.I. COMPLETA	1	1				
2	97E95–06520	BOLT, HEXAGON W/W DEEP RECESS TORNILLO HEXAGONAL CON RONDONA	2	2				
3	90464–15M11	CLAMP BRIDA	1	1				
4	90465–08M61	CLAMP BRIDA	1	1				
5	63V–85570–10	IGNITION COIL ASSY BOBINA DE IGNICION COMPLETO	2	2				
6	97E95–06518	BOLT, HEXAGON W/W DEEP RECESS TORNILLO HEXAGONAL CON RONDONA	2	2				
7	90480–25161	GROMMET TAPON	1	1				
8	663–82370–01	PLUG CAP ASSY TAPON DE BUJIA COMPLT	2	2				
9	90464–08M02	CLAMP BRIDA	1	1				
10	97E95–06512	BOLT, HEXAGON W/W DEEP RECESS TORNILLO HEXAGONAL CON RONDONA	1	1				
11	662–82519–00	WIRE, EARTH LEAD CABLE CONDUCTOR A TIERRA	1	1				
12	97E95–06512	BOLT, HEXAGON W/W DEEP RECESS TORNILLO HEXAGONAL CON RONDONA	2	2				

FIG. 11 BOTTOM COWLING — CUBIERTA INFERIOR

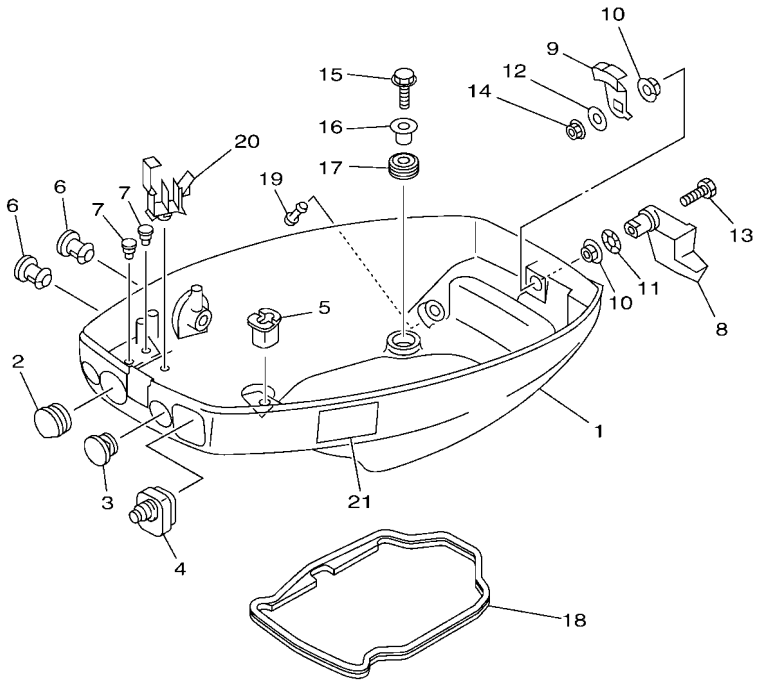

63VL700-R110

REF. NO.	PART NO. CODIGO Nº	DESCRIPTION DESCRIPCION	6MR1	63WP				REMARKS OBSERVACIONES
1	63V–42711–03–8D	COWLING, BOTTOM 1 CUBIERTA INFERIOR 1	1	1				
2	682–42724–01	GROMMET TAPON	1	1				
3	682–42725–02	GROMMET TAPON	1	1				
4	63V–42726–01	GROMMET TAPON	1	1				
5	682–42727–01	GROMMET TAPON	1	1				
6	6G1–42748–01	GROMMET TAPON	2	2				
7	90480–06M19	GROMMET TAPON	2	2				
8	63V–42815–01–8D	LEVER, CLAMP 1 PALANCA ABRAZADERA 1	1	1				
9	6E7–42816–00	LEVER, CLAMP 2 PALANCA ABRAZADERA 2	1	1				
10	90386–12M45	BUSH BUJE	2	2				
11	90206–12052	WASHER, WAVE ARANDELA ONDULADA	1	1				
12	90201–06068	WASHER, PLATE ARANDELA PLANA	1	1				
13	97D95–06025	BOLT, HEXAGON DEEP RECESS TORNILLO HEXAGONAL	1	1				
14	95380–06700	NUT TUERCA	1	1				
15	97E95–06525	BOLT, HEXAGON W/W DEEP RECESS TORNILLO HEXAGONAL CON RONDONA	4	4				
16	90387–06M52	COLLAR ESPACIADOR	4	4				
17	90480–15M31	GROMMET TAPON	4	4				
18	63V–42716–02	RUBBER SEAL 1 SELLO DE GOMA 1	1	1				
19	6BL–44391–00	NIPPLE, HOSE NIPLE MANGUERA	1	1				
20	90465–25M57	CLAMP BRIDA	1	1				
21	6EE–42794–40	LABEL, WARNING (GENERAL) ETIQUETA DE PRECAUCION	1	1				

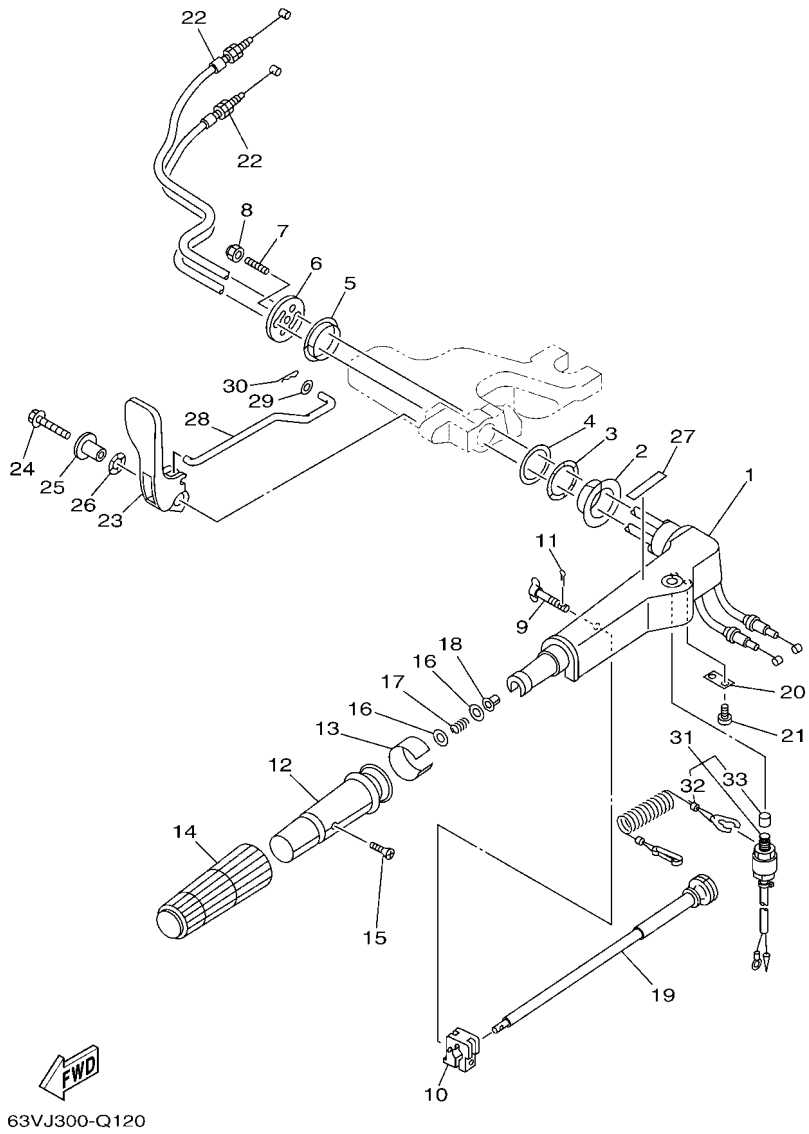

FIG. 12 STEERING — DIRECCION

REF. NO.	PART NO. CODIGO Nº	DESCRIPTION DESCRIPCION	6MR1	63WP				REMARKS OBSERVACIONES
1	63V–42111–01–8D	HANDLE, STEERING MANIJA DE DIRECCION	1	1				
2	90386–34M97	BUSH BUJE	1	1				
3	90206–36M21	WASHER, WAVE ARANDELA ONDULADA	1	1				
4	90202–36M55	WASHER, PLATE ARANDELA DE PLANA	1	1				
5	90386–33M96	BUSH BUJE	1	1				
6	6G1–42131–02	COVER, HANDLE STEERING CUBIERTA MANIJA DIRRECCION	1	1				
7	90116–08016	BOLT, STUD ESPARRAGO	1	1				
8	90185–08057	NUT, SELF-LOCKING TUERCA AUTOBLOCANTE	1	1				
9	6G1–42125–01	BOLT, FRICTION ADJUSTING TORNILLO FRICCION ADJUSTA	1	1				
10	6G1–42126–00	FRICTION, STEERING HANDLE GRIP FRICCION DE MANGO DIRECCION	1	1				
11	91490–16010	PIN. COTTER CHAVETA	1	1				
12	664–42119–00	GRIP, STEERING HANDLE MANGO, MANIJA DE DIRRECCION	1	1				
13	6H2–42137–10	INDICATOR, THROTTLE INDICADOR ACELERADOR	1	1				
14	6G1–42177–01	RUBBER, HANDLE HULE DE MANIJA	1	1				
15	90152–05011	SCREW, COUNTERSUNK TORNILLO EMBUTIDO	1	1				
16	90201–10M02	WASHER, PLATE ARANDELA PLANA	2	2				
17	90501–23215	SPRING, COMPRESSION RESORTE DE COMPRESION	1	1				
18	90386–08032	BUSH BUJE	1	1				
19	6G1–42138–01	LEVER, THROTTLE PLANCA DE ACELERACION	1	1				
20	6E0–42159–02	STAY SOPORTE	1	1				
21	97885–05012	SCREW, PAN HEAD TORNILLO A MUESCA	2	2				
22	6L2–26301–01	THROTTLE CABLE ASSY CABLE DE ACELERADOR COMPLETO	2	2				
23	63V–44111–02	HANDLE, GEAR SHIFT MANIJA DE CAMBIO DE MARCHAS	1	1				
24	90119–06M05	BOLT, WITH WASHER TORNILLO CON ARANDELA	1	1				
25	90387–06M86	COLLAR ESPACIADOR	1	1				
26	90206–15M18	WASHER, WAVE ARANDELA ONDULADA	1	1				
27	6X3–44191–00	INDICATOR, SHIFT INDICADOR DE CAMBIOS	1	1				

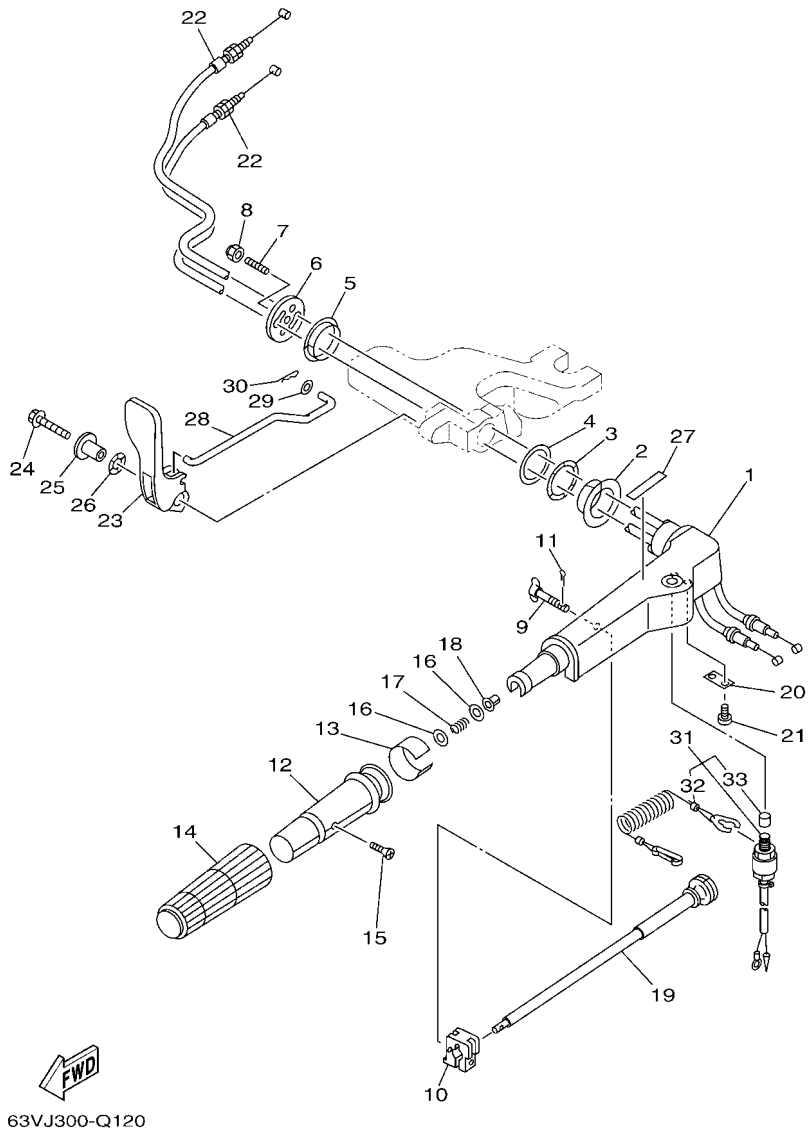

FIG. 12 STEERING — DIRECCION

REF. NO.	PART NO. CODIGO Nº	DESCRIPTION DESCRIPCION	6MR1	63WP				REMARKS OBSERVACIONES
28	63V–44124–02	LINK, SHIFT ROD ESLABON	1	1				
29	90202–06009	WASHER, PLATE ARANDELA DE PLANA	1	1				
30	90468–18008	CLIP PRESILLA	1	1				
31	65W–82575–01	ENGINE STOP SWITCH ASSY INTERRUPTOR DE PARADA COMPL	1	1				
32	682–82556–00	.LANYARD, STOP SWITCH .CORDON DE INTERRUPTOR PARADA	1	1				
33	689–8257Y–00	.CAP .TAPA	1	1				

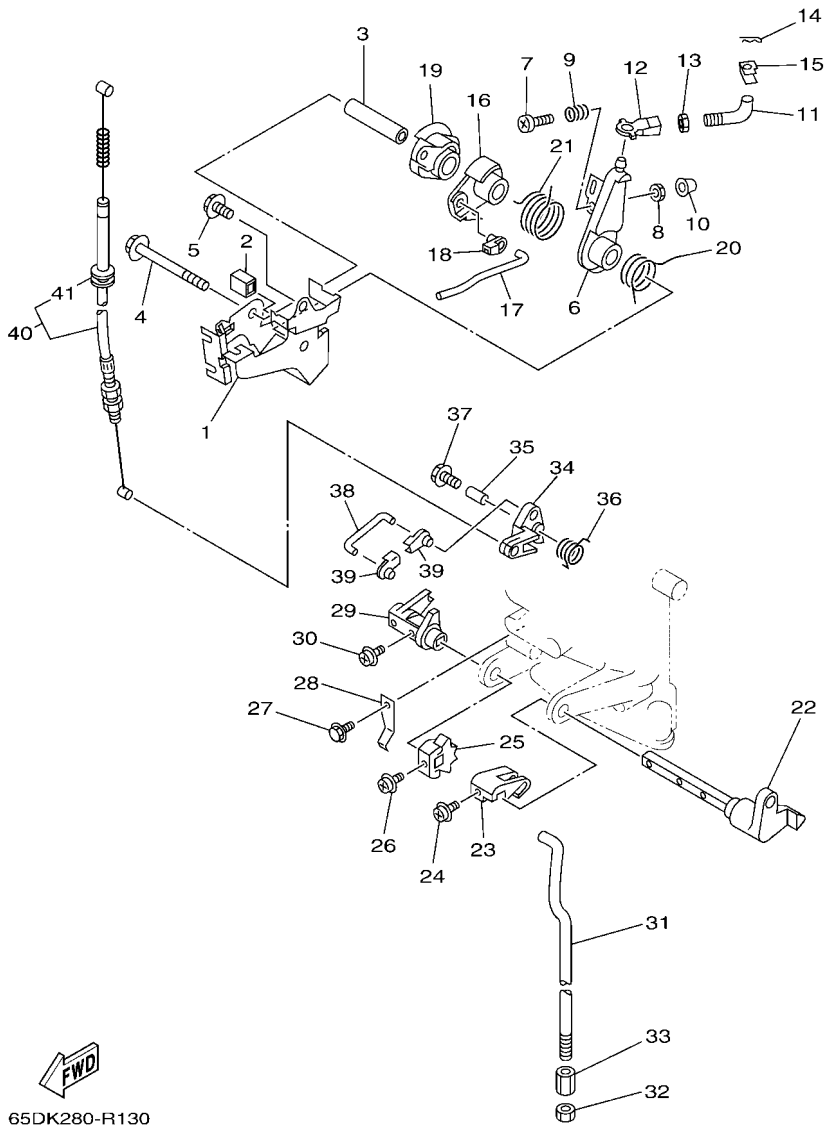

FIG. 13 CONTROL

CONTROL

REF. NO.	PART NO. CODIGO Nº	DESCRIPTION DESCRIPCION	6MR1	63WP				REMARKS OBSERVACIONES
1	63V–14497–02	STAY, THROTTLE WIRE SOPORTE VALVULA DE OBTURACION	1	1				
2	689–44194–01	CAP TAPA	1	1				
3	90387–06M50	COLLAR ESPACIADOR	1	1				
4	95D95–06065	BOLT, FLANGE DEEP RECESS CERROJO, REBORDE HUECO PROFUND	1	1				
5	97E95–06512	BOLT, HEXAGON W/W DEEP RECESS TORNILLO HEXAGONAL CON RONDONA	1	1				
6	63V–41631–01	LEVER, MAGNETO CONTROL PALANCA DE CONTROL DE MAGNETO	1	1				
7	97885–06030	SCREW, PAN HEAD TORNILLO A MUESCA	1	1				
8	95380–06600	NUT, HEXAGON TUERCA	1	1				
9	90501–12M16	SPRING, COMPRESSION RESORTE DE COMPRESION	1	1				
10	688–44194–00	CAP TAPA	1	1				
11	63V–41238–00	JOINT, LINK CONECTOR	1	1				
12	6H4–41237–00	JOINT, LINK CONECTOR	1	1				
13	95380–05700	NUT TUERCA	1	1				
14	90468–10005	CLIP PRESILLA	1	1				
15	63V–41223–00	WASHER, LOCK 1 ARANDERA DE SEGURO1	1	1				
16	63V–41283–01	LEVER, FREE ACCEL. PALANCA	1	1				
17	63V–41211–00	LINK, ACCEL. ESLABON, ACELERADOR	1	1				
18	661–41262–02	JOINT, CHOKE LEVER CONECTOR DE AHOGADOR	1	1				
19	63V–41638–00	PULLEY POLEA	1	1				
20	90508–16M37	SPRING, TORSION RESORTE DE TORSION	1	1				
21	90508–20M38	SPRING, TORSION RESORTE DE TORSION	1	1				
22	63V–44123–02	ARM, SHIFT ROD BRAZO VARILLA DE CAMBIOS	1	1				
23	63V–44121–01	LEVER, SHIFT ROD PALANCA VARILLA CAMBIOS	1	1				
24	90159–05M25	SCREW, WITH WASHER TORNILLO CON VALONA	1	1				
25	63V–44125–00	LEVER, SHIFT ROD PALANCA VARILLA CAMBIOS	1	1				
26	90159–05M25	SCREW, WITH WASHER TORNILLO CON VALONA	1	1				
27	95D95–06012	BOLT, FLANGE DEEP RECESS CERROJO, REBORDE HUECO PROFUND	1	1				

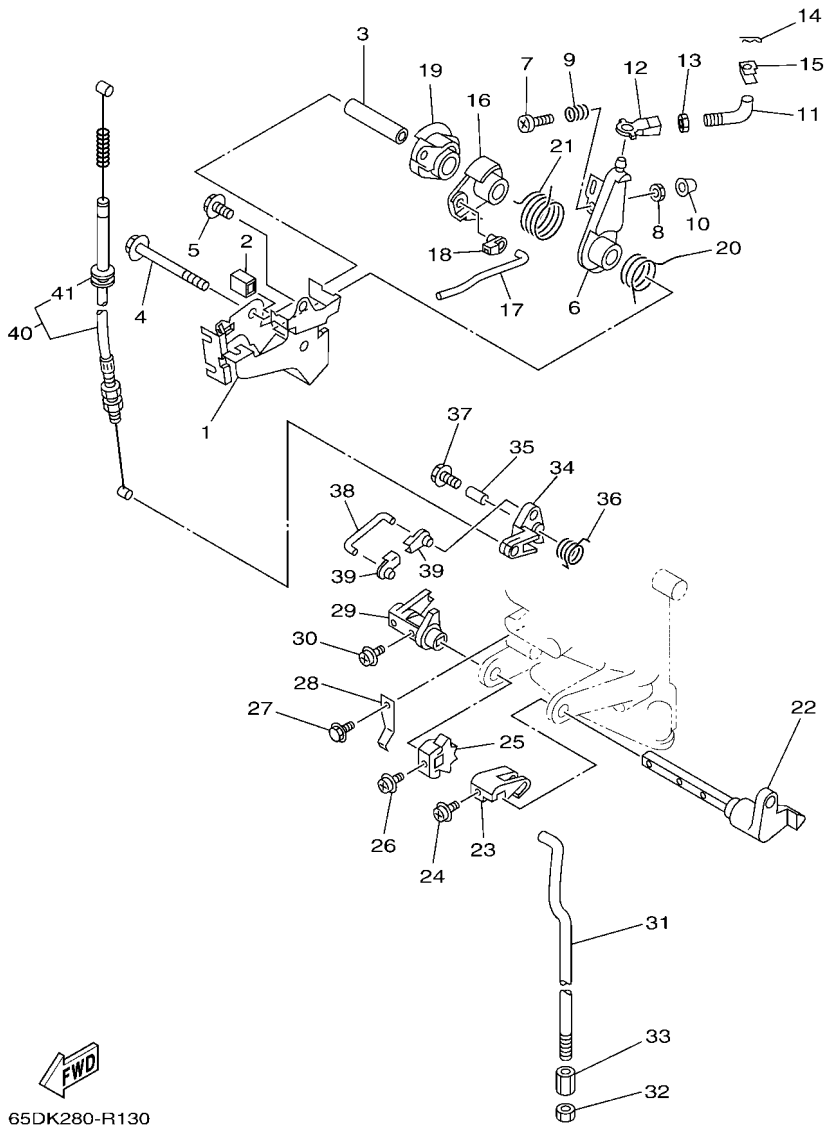

FIG. 13 CONTROL

CONTROL

REF. NO.	PART NO. CODIGO Nº	DESCRIPTION DESCRIPCION	6MR1	63WP				REMARKS OBSERVACIONES
28	63V–44116–00	SPRING RESORTE	1	1				
29	63V–44122–01	BUSHING, SHIFT ROD LEVER BUJE PALANCA VARILLA DE CAMBIO	1	1				
30	90159–05M25	SCREW, WITH WASHER TORNILLO CON VALONA	1	1				
31	63V–44143–01	ROD, SHIFT 1 VARILLA DE CAMBIO 1	1	1				
32	95380–06700	NUT TUERCA	1	1				
33	61N–44146–00	CONNECTOR, SHIFT ROD 2 CONECTOR VARILLA DE CAMBIO 2	1	1				
34	63V–15746–10	ARM BRAZO	1	1				
35	90387–06M06	COLLAR ESPACIADOR	1	1				
36	90508–08M39	SPRING, TORSION RESORTE DE TORSION	1	1				
37	97E95–06520	BOLT, HEXAGON W/W DEEP RECESS TORNILLO HEXAGONAL CON RONDONA	1	1				
38	6L2–15747–00	LINK ESLABON	1	1				
39	661–41262–02	JOINT, CHOKE LEVER CONECTOR DE AHOGADOR	2	2				
40	63V–15770–01	CABLE COMP., STARTER STOP CABLECOMPL DE SEGURO ARRANQUE	1	1				
41	90480–10M16	.GROMMET .TAPON	1	1				

FIG. 14 REMO CON ATTACHMENT — CONJUNTO ADITAMENTO

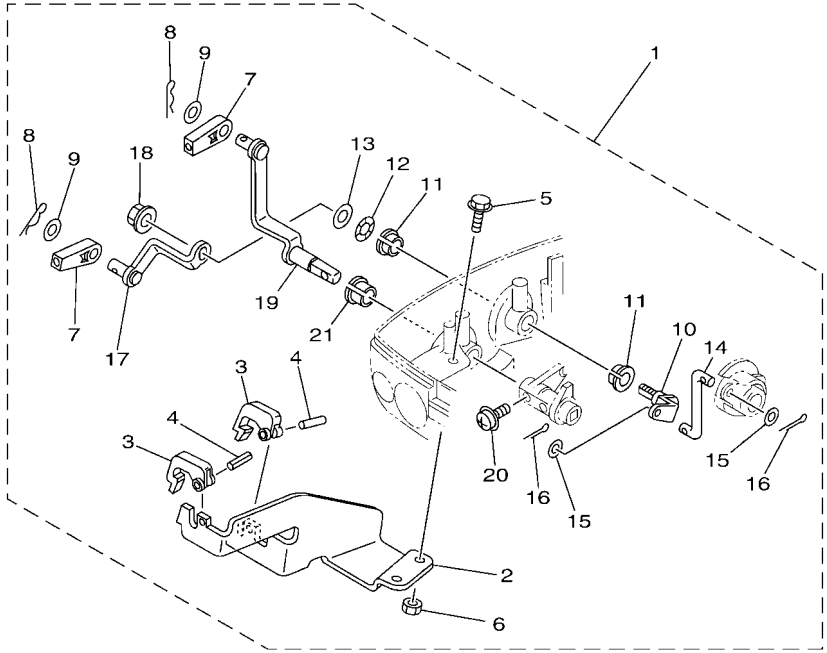

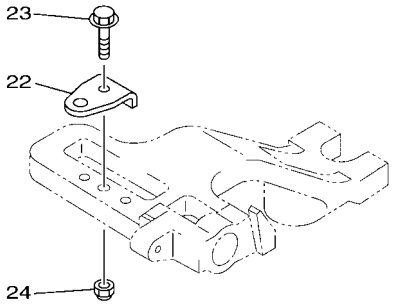

63VN300-S140

REF. NO.	PART NO. CODIGO Nº	DESCRIPTION DESCRIPCION	6MR1	63WP				REMARKS OBSERVACIONES
1	63V–48501–00	REMOTE CONT. ATTACHMENT ASSY. CONJUNTO ADITAMENTO	1	1				AP AP
2	63V–48531–00	.BRACKET, REMOTE CONTROL 1 .SOPORTE DE CONTROL REMOTO	1	1				
3	682–48538–50	.CLAMP, CABLE 1 .GRAMPA DE CABLE	2	2				
4	91690–30012	.PIN, SPRING .PASADOR DE RESORTE	2	2				
5	97595–06516	.BOLT, WITH WASHER .PERNO CON ARANDELA	2	2				
6	95380–06600	.NUT, HEXAGON .TUERCA	2	2				
7	6FM–48344–00	.CABLE END, REMOTE CONTROL .BASE CONTROL	2	2				
8	90468–18008	.CLIP .PRESILLA	2	2				
9	90201–08M12	.WASHER, PLATE .ARANDELA PLANA	2	2				
10	63V–42154–00	.LEVER, THROTTLE CONTROL .PALANCA CONTROL ACELERADOR	1	1				
11	90386–10025	.BUSH .BUJE	2	2				
12	90206–10M04	.WASHER, WAVE .ARANDELA ONDULADA	1	1				
13	90201–10M02	.WASHER, PLATE .ARANDELA PLANA	1	1				
14	63V–42192–00	.ROD 2 .VARILLA 2	1	1				
15	90201–04M06	.WASHER, PLATE .ARANDELA PLANA	2	2				
16	91490–20010	.PIN. COTTER .CHAVETA	2	2				
17	63V–48534–00	.THROTTLE LEVER, CONTROL .PALANCA DE CONTROL DE ACELERAC	1	1				
18	95780–08300	.NUT, FLANGE .TUERCA	1	1				
19	63V–48544–00	.LEVER, SHIFTCONTROL .PALANCA, CONTROL CAMBIOS	1	1				
20	90159–05M25	.SCREW, WITH WASHER .TORNILLO CON VALONA	1	1				
21	90386–10009	.BUSH .BUJE	1	1				
22	63V–48511–01	HOOK, STEERING GANCHO DIRECCION	1	1				AP AP
23	97E75–08535	BOLT, HEXAGON W/W DEEP RECESS TORNILLO HEXAGONAL CON RONDONA	1	1				AP AP
24	90185–08057	NUT, SELF-LOCKING TUERCA AUTOBLOCANTE	1	1				AP AP

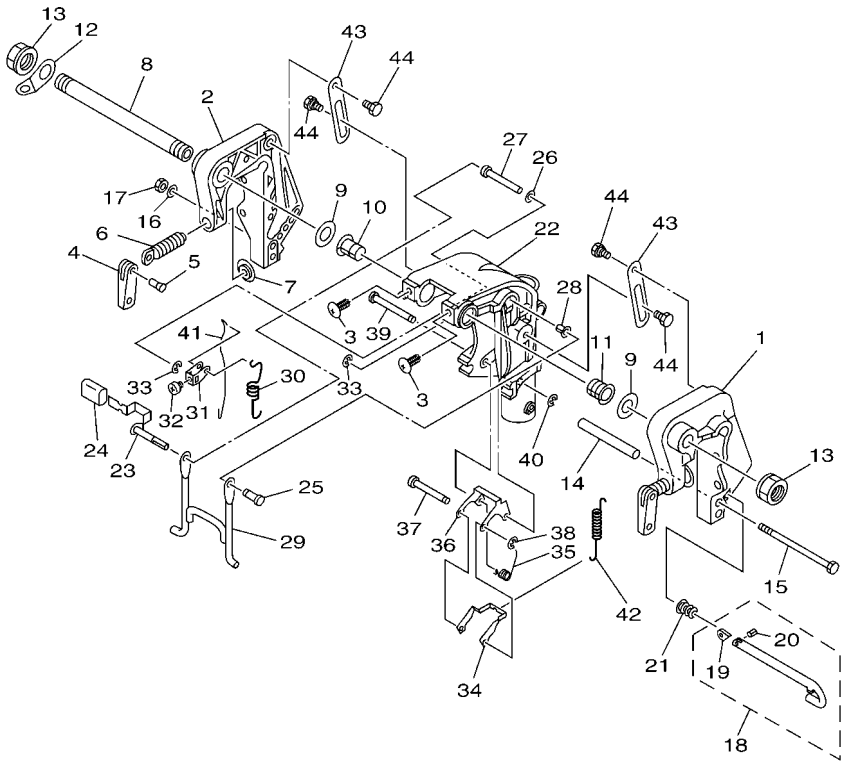

FIG. 15 BRACKET 1 — SOPORTE 1

REF. NO.	PART NO. CODIGO Nº	DESCRIPTION DESCRIPCION	6MR1	63WP				REMARKS OBSERVACIONES
1	63V–43111–07–8D	BRACKET, CLAMP 1 SOPORTE DE LA ABRAZADERA 1	1	1				
2	63V–43112–08–8D	BRACKET, CLAMP 2 SOPORTE DE LA ABRAZADERA 2	1	1				
3	90269–07015	RIVET REMACHE	2	2				
4	6E0–43118–01	HANDLE, TRANSOM CLAMP MANIJA DE LA ABRAZADERA DEL ES	2	2				
5	90243–04M01	PIN PASADOR	2	2				
6	6E7–43116–00	SCREW, TRANSOM CLAMP TORNILLO DE ABRAZADERA	2	2				
7	648–43114–01	PAD, TRANSOM CLAMP ARANDELA DE ABRAZADERA	2	2				
8	63W–43131–01	BOLT, CLAMP BRACKET TORNILLO DE ABRAZADERA DEL SOP	1	1				
9	90202–22M54	WASHER, PLATE ARANDELA DE PLANA	2	2				
10	90386–22M94	BUSH BUJE	1	1				
11	90386–22M94	BUSH BUJE	1	1				
12	6J8–43113–01	PLATE, CLAMP BRACKET PLACA ABRAZADERA SOPORTE	1	1				
13	90185–22043	NUT, SELF-LOCKING TUERCA AUTOBLOCANTE	2	2				
14	90387–06M13	COLLAR ESPACIADOR	1	1				
15	90101–06M29	BOLT TORNILLO	1	1				
16	92995–06600	WASHER ARANDELA	1	1				
17	95380–06700	NUT TUERCA	1	1				
18	689–43160–00	TILT ROD ASSY VARILLA DE BASCULACION COMPL.	1	1				
19	689–43165–00	.PLATE, TILT LOCK .PLACA DE TOPE, VARILLA SEGURID	1	1				
20	91690–30008	.PIN, SPRING .PASADOR DE RESORTE	1	1				
21	90502–10M07	SPRING, CONICAL RESORTE CONICO	1	1				
22	63V–43311–03–8D	BRACKET, SWIVEL 1 SOPORTE GIRATORIO 1	1	1				
23	66M–43630–01	TILT LEVER ASSY PLANCA DE INCLINACION COMPL	1	1				
24	682–43318–01	COVER CUBIERTA	1	1				
25	63V–43191–00	SHAFT, STOPPER EJE DE TOPE	1	1				
26	90202–07M60	WASHER, PLATE ARANDELA DE PLANA	1	1				
27	90387–07M07	COLLAR ESPACIADOR	1	1				

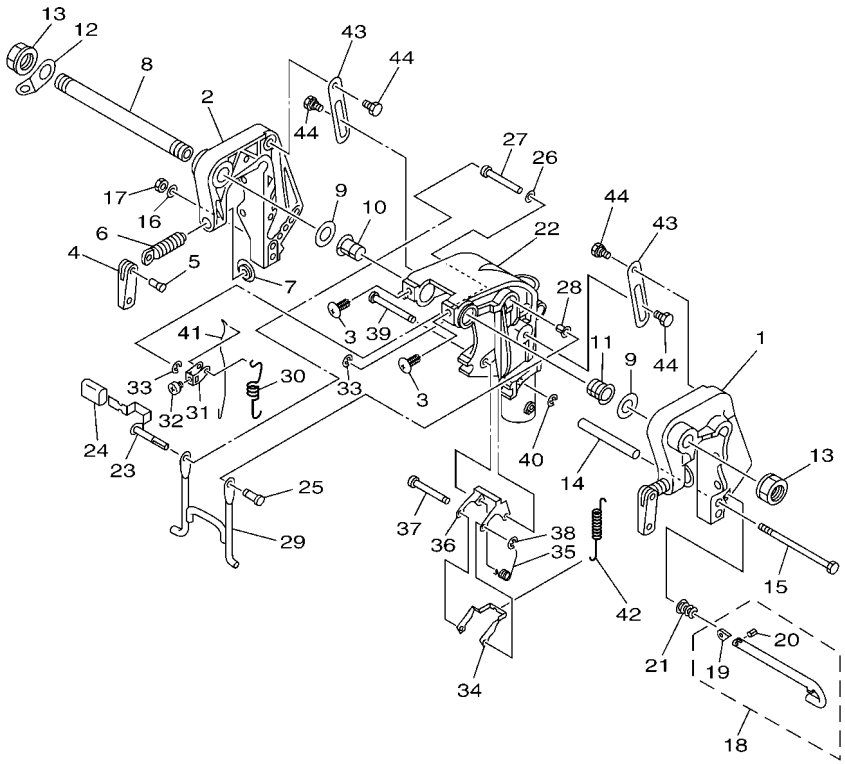

FIG. 15 BRACKET 1 — SOPORTE 1

REF. NO.	PART NO. CODIGO Nº	DESCRIPTION DESCRIPCION	6MR1	63WP				REMARKS OBSERVACIONES
28	90386–07M95	BUSH BUJE	1	1				
29	66M–43350–01	RECEIVER ASSY RECIBIDOR COMPL	1	1				
30	90507–20M00	SPRING, TENSION RESORTE DE TENSION	1	1				
31	63V–43641–01	LEVER, TILT PALANCA DE INCLINACION	1	1				
32	90157–05014	SCREW, PAN HEAD TORNILLO CABEZA CONICA PLANA	1	1				
33	99080–05600	CIRCLIP PRESILLA REDONDA	2	2				
34	63V–43614–10	PLATE, TILT LOCK PLACA DE SEGURO DE INCLINACION	1	1				
35	90508–18M41	SPRING, TORSION RESORTE DE TORSION	1	1				
36	66R–43615–00	PLATE, TILT LOCK PLACA DE SEGURO DE INCLINACION	1	1				
37	66R–43611–00	SHAFT, TILT LOCK EJE SEGURO INCLINACION	1	1				
38	93430–04M03	CIRCLIP SEGURO	1	1				
39	63V–43659–00	SHAFT, REVERSE LOCK EJE SEGURO DE REVERSA	1	1				
40	99080–05600	CIRCLIP PRESILLA REDONDA	1	1				
41	66R–43617–00	ROD, TILT LOCK VARILLA SEGURO DE INCLINACION	1	1				
42	63V–43656–00	SPRING, REVERSE LOCK 1 RESORTE	1	1				
43	63V–43181–00	LEVER, TILT STOP 1 PALANCA TOPE INCLINACION 1	2	2				
44	90109–06M84	BOLT PERNO	4	4				

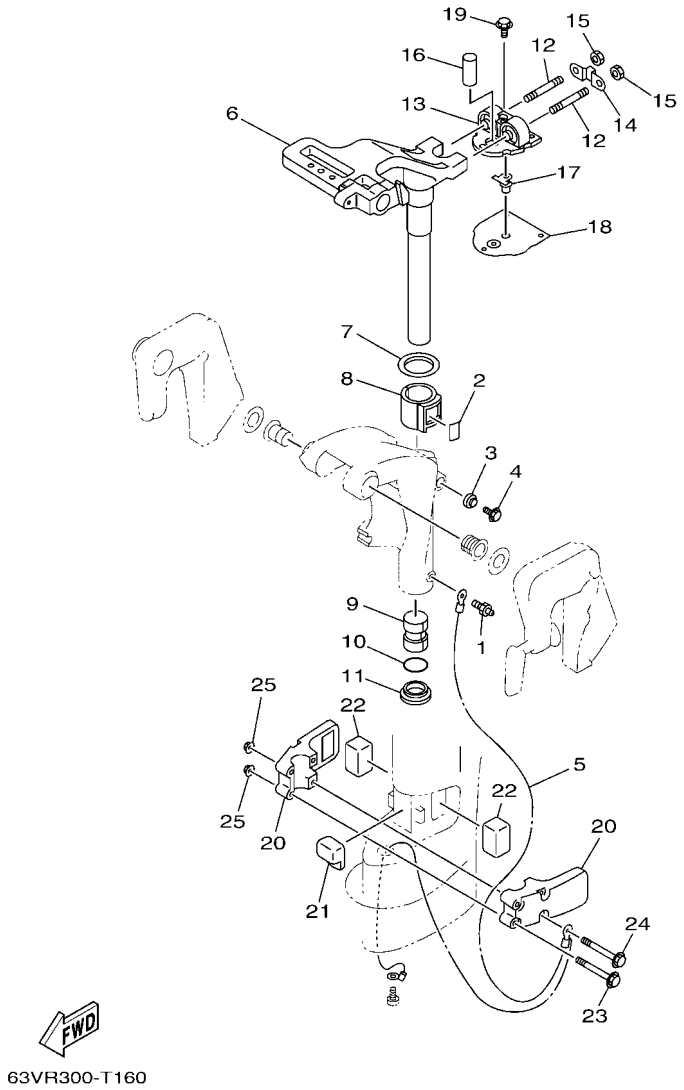

63VR300-T160

FIG. 16 BRACKET 2 — SOPORTE 2

REF. NO.	PART NO. CODIGO Nº	DESCRIPTION DESCRIPCION	6MR1	63WP				REMARKS OBSERVACIONES
1	93700–06M03	NIPPLE, GREASE BOQUILLA DE ENGRASAR	1	1				
2	63V–42528–00	PLATE, FRICTION PIEZA DE FRICCION	1	1				
3	689–43373–02	SEAL, DAMPER SELLO DE GOMA	1	1				
4	90105–06M07	BOLT, FLANGE TORNILLO	1	1				
5	63V–82127–00	WIRE, LEAD 2 CABLE CONDUCTOR 2	1	1				
6	63V–42511–04–8D	BRACKET, STEERING SOPORTE DE DIRECCION	1	1				
7	90209–40008	WASHER ARANDELA DE SEPARACION	1	1				
8	65F–42537–00	BUSHING, PIVOT SHAFT BUJE DEL PIVOTE DE LA FLECHA	1	1				
9	90386–30048	BUSH BUJE	1	1				
10	93210–29M94	O-RING ANILLO O	1	1				
11	90386–30M60	BUSH BUJE	1	1				
12	90116–08M54	BOLT, STUD ESPARRAGO	2	2				
13	63V–44514–01–CA	MOUNT DAMPER, UPPER SIDE AMORTIGUADOR LADO SUPERIOR	1	1				
14	63V–44526–00	PLATE PLACA 1	1	1				
15	95380–08600	NUT TUERCA	2	2				
16	90387–16002	COLLAR ESPACIADOR	1	1				
17	63V–44366–02	DAMPER, WATER SEAL 2 GOMA DEL SELLO DE AGUA 2	1	1				
18	63V–45114–A1	GASKET, UPPER CASING EMPAQUE	1	1				
19	97E95–06518	BOLT, HEXAGON W/W DEEP RECESS TORNILLO HEXAGONAL CON RONDONA	3	3				
20	63V–44551–01–8D	HOUSING, LOWER MOUNT RUBBER 1 CAJA AMORTIGUADOR INFERIOR HU	2	2				
21	63V–44557–01	MOUNT DAMPER, LOWER FRONT AMORTIGUADOR DE HULE FRENTE IN	1	1				
22	682–44555–00	MOUNT DAMPER, LOWER SIDE AMORTIGUADOR DE HULE LADO INFE	2	2				
23	97E75–06555	BOLT, HEXAGON W/W DEEP RECESS TORNILLO HEXAGONAL CON RONDONA	2	2				
24	97E75–06575	BOLT, HEXAGON W/W DEEP RECESS TORNILLO HEXAGONAL CON RONDONA	2	2				
25	90179–06M28	NUT TUERCA	4	4				

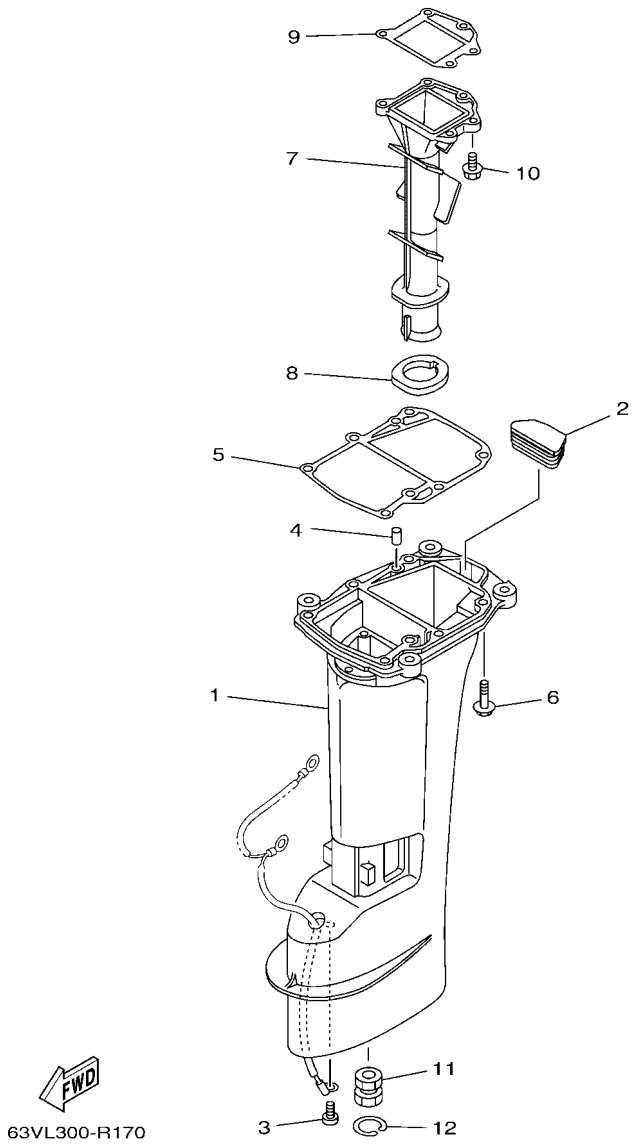

FIG. 17 UPPER CASING — FUNDA SUPERIOR

REF. NO.	PART NO. CODIGO Nº	DESCRIPTION DESCRIPCION	6MR1	63WP				REMARKS OBSERVACIONES
1	63V–45111–05–8D	CASING, UPPER CAJA SUPERIOR	1	1				S(17.3") S(17.3")
	63V–45111–15–8D	CASING, UPPER CAJA SUPERIOR	1	1				L(22.3") L(22.3")
2	63V–45126–01	PLATE, SEAL DAMPER PLACA DE SELLO DE HULE	1	1				
3	90157–06M06	SCREW, PAN HEAD TORNILLO CABEZA CONICA PLANA	1	1				
4	93606–12019	PIN, DOWEL PASADOR DE CLAVIJA	2	2				
5	63V–45113–A1	GASKET, UPPER CASING EMPAQUE	1	1				
6	97E75–08530	BOLT, HEXAGON W/W DEEP RECESS TORNILLO HEXAGONAL CON RONDONA	6	6				
7	65F–41131–00–CA	MANIFOLD, EXT. 1 TUBO MULTIPLE DE ESCAPE	1	1				
8	63V–41135–01	GASKET, EXHAUST MANIFOLD EMPAQUE	1	1				
9	63V–41133–A1	GASKET, EXHAUST MANIFOLD 1 EMPAQUE ESCAPE MULTIPLE	1	1				
10	97E95–06520	BOLT, HEXAGON W/W DEEP RECESS TORNILLO HEXAGONAL CON RONDONA	5	5				
11	682–45318–00	BUSHING, DRIVE SHAFT BUJE, EJE DE MANDO	1	1				L(22.3") L(22.3")
12	93420–30042	CIRCLIP SEGURO	1	1				L(22.3") L(22.3")

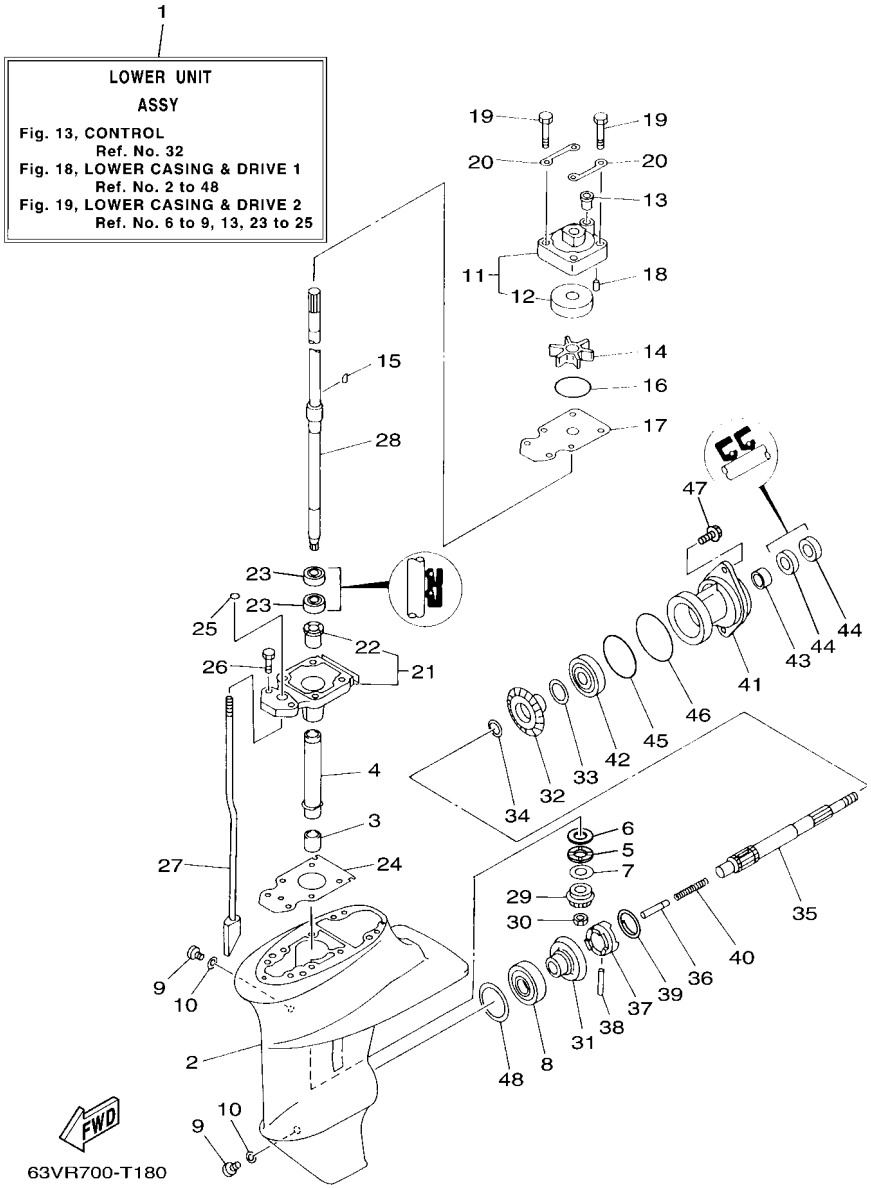

FIG. 18 LOWER CASING & DRIVE 1 — IMPULSOR E INFERIOR 1

REF. NO.	PART NO. CODIGO Nº	DESCRIPTION DESCRIPCION	6MR1	63WP				REMARKS OBSERVACIONES
1	63V–45300–05–8D	LOWER UNIT ASSY CONJUNTO UNIDAD INFERIOR	1	1				S(17.3") S(17.3")
	63V–45300–15–8D	LOWER UNIT ASSY CONJUNTO UNIDAD INFERIOR	1	1				L(22.3") L(22.3")
2	63V–45311–01–8D	CASING, LOWER FUNDA INFERIOR	1	1				
3	93315–314V8	BEARING COJINETE DE RODILLOS	1	1				
4	63V–45536–00	SLEEVE, DRIVE SHAFT CAMISA EJE DE MANDO	1	1				
5	90209–14011	WASHER ARANDELA DE SEPARACION	1	1				
6	90201–15017	WASHER, PLATE ARANDELA PLANA	1	1				
7	6E8–45587–10	SHIM (T:1.13MM) LAINA (T:1.13MM)	1	1				UR UR
	6E8–45587–30	SHIM (T:1.20MM) LAINA (T:1.20MM)	1	1				UR UR
8	93332–00005	BEARING COJINETE	1	1				
9	90340–08002	PLUG, STRAIGHT SCREW TORNILLO, DE DRENAJE	2	2				
10	90430–08003	GASKET JUNTA	2	2				
11	63V–44301–00	WATER PUMP HOUSING COMP. CAJA DE BOMBE DE AGUA COMPL	1	1				FOR STD FOR STD
	63V–44301–40	WATER PUMP HOUSING COMP. CAJA DE BOMBE DE AGUA COMPL	1	1				FOR CHROMATE FOR CHROMATE
12	63V–44322–00	.INSERT, CARTRIDGE .CARTUCHO	1	1				FOR 63V-44301-00 FOR 63V-44301-00
	63V–44322–40	.INSERT, CARTRIDGE .CARTUCHO	1	1				FOR 63V-44301-40 FOR 63V-44301-40
13	647–44366–01	DAMPER, WATER SEAL 2 GOMA DEL SELLO DE AGUA 2	1	1				
14	63V–44352–01	IMPELLER IMPULSOR	1	1				
15	63V–44338–00	KEY, WOODRUFF CUNA WOODRUFF	1	1				
16	93210–44398	O-RING ANILLO O	1	1				
17	63V–44323–00	OUTER PLATE, CARTRIDGE PLACA EXTERIOR DEL CARTUCHO	1	1				FOR STD FOR STD
	63V–44323–40	OUTER PLATE, CARTRIDGE PLACA EXTERIOR DEL CARTUCHO	1	1				FOR CHROMATE FOR CHROMATE
18	93604–12M07	PIN, DOWEL PASADOR DE CLAVIJA	2	2				
19	97D95–08045	BOLT, HEXAGON DEEP RECESS TORNILLO HEXAGONAL	4	4				
20	63V–44328–01	PLATE PLACA	2	2				
21	63V–45331–00–CA	HOUSING, BEARING CAJA DE COJINETE	1	1				
22	626–45316–09	.BUSHING, DRIVE SHAFT .BUJE, EJE DE MANDO	1	1				

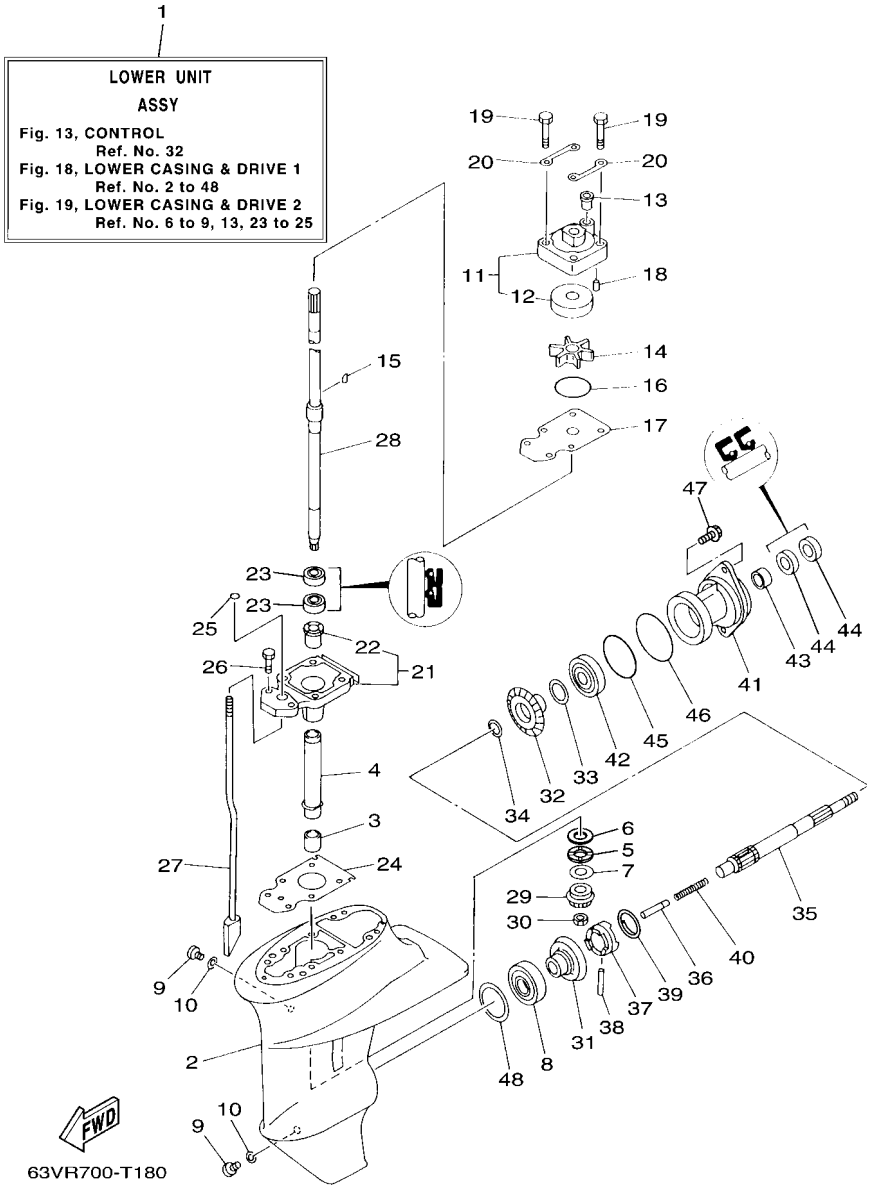

FIG. 18 LOWER CASING & DRIVE 1 — IMPULSOR E INFERIOR 1

REF. NO.	PART NO. CODIGO Nº	DESCRIPTION DESCRIPCION	6MR1	63WP				REMARKS OBSERVACIONES
23	93101–20048	OIL SEAL SELLO ACEITE	2	2				
24	63V–45315–A0	PACKING, LOWER CASING EMPAQUE	1	1				
25	93210–06ME6	O-RING ANILLO O	1	1				
26	97080–08025	BOLT PERNO	2	2				
27	63V–44150–00	SHIFT CAM ASSY CONJUNTO EJE LEVA COMPL.	1	1				S(17.3") S(17.3")
	63V–44150–10	SHIFT CAM ASSY CONJUNTO EJE LEVA COMPL.	1	1				L(22.3") L(22.3")
28	63V–45510–01	DRIVE SHAFT ASSY EJE DE MANDO COMPL.	1	1				S(17.3") S(17.3")
	63V–45510–11	DRIVE SHAFT ASSY EJE DE MANDO COMPL.	1	1				L(22.3") L(22.3")
29	63V–45551–00	PINION (13T) PINON (13T)	1	1				
30	90179–08M06	NUT TUERCA	1	1				
31	6E7–45560–01	GEAR 1 (27T) ENGRANAJE 1 (27T)	1	1				
32	6E7–45571–00	GEAR 2 (27T) ENGRANAJE 2 (27T)	1	1				
33	626–45577–00	SHIM (T:0.10MM) LAINA (T:0.10MM)	1	1				UR UR
	626–45577–10	SHIM (T:0.20MM) LAINA (T:0.20MM)	1	1				UR UR
	626–45577–20	SHIM (T:0.30MM) LAINA (T:0.30MM)	1	1				UR UR
	626–45577–30	SHIM (T:0.40MM) LAINA (T:0.40MM)	1	1				UR UR
	626–45577–40	SHIM (T:0.50MM) LAINA (T:0.50MM)	1	1				UR UR
34	90201–17682	WASHER, PLATE ARANDELA PLANA	1	1				
35	683–45611–00	SHAFT, PROPELLER EJE PROPUSOR	1	1				
36	650–45635–00	PLUNGER, SHIFT EMBOLO DE CAMBIO	1	1				
37	682–45631–00	CLUTCH, DOG EMBRAGUE DE GARRA	1	1				
38	90250–05010	PIN, STRAIGHT PASADOR CILINDRICO	1	1				
39	648–45633–11	RING, CROSS PIN ANILLO DE PASADOR	1	1				
40	90501–14M06	SPRING, COMPRESSION RESORTE DE COMPRESION	1	1				
41	683–45361–02–8D	CAP, LOWER CASING FUNDA INFERIOR	1	1				
42	93306–00501	BEARING COJINETE	1	1				
43	93315–317U2	BEARING COJINETE DE RODILLOS	1	1				

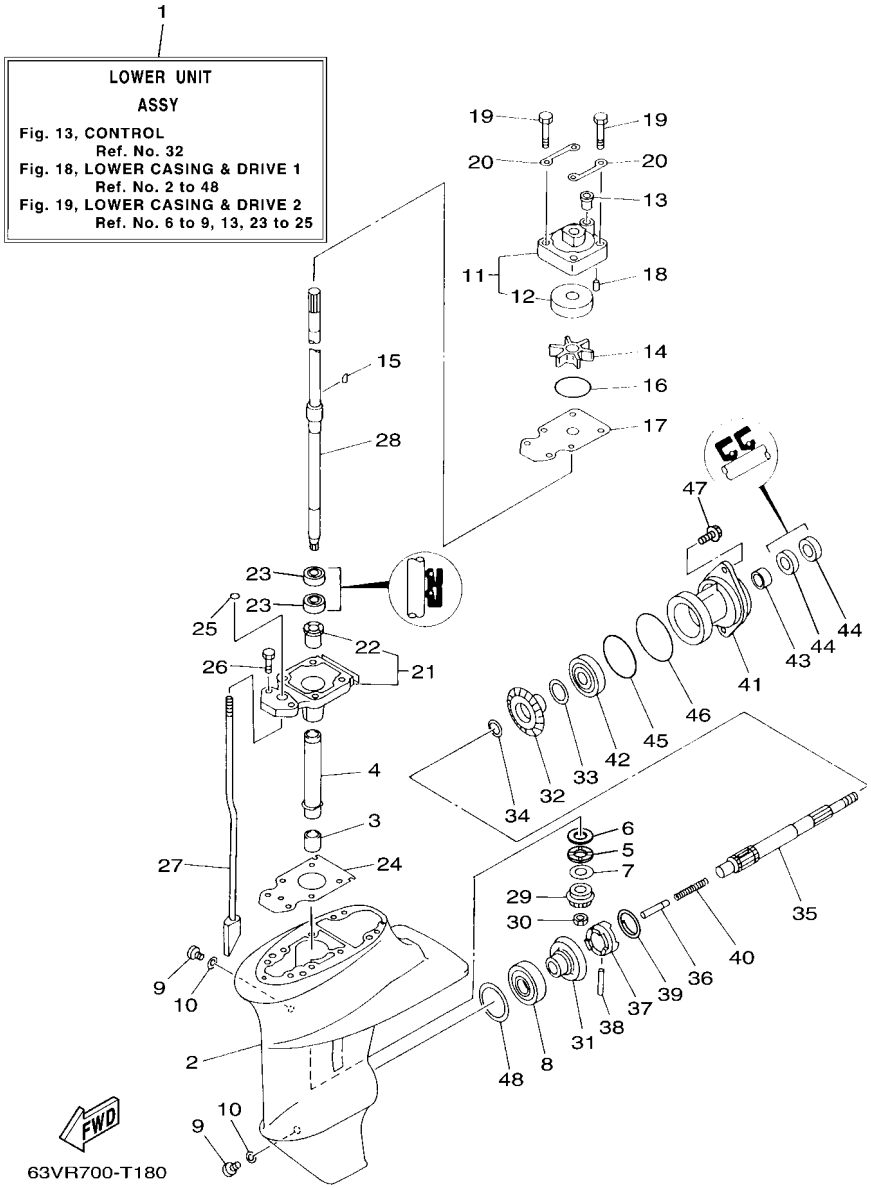

FIG. 18 LOWER CASING & DRIVE 1 — IMPULSOR E INFERIOR 1

REF. NO.	PART NO. CODIGO Nº	DESCRIPTION DESCRIPCION	6MR1	63WP				REMARKS OBSERVACIONES
44	93101–17054	OIL SEAL SELLO ACEITE	2	2				
45	93210–57M09	O-RING ANILLO O	1	1				
46	93210–56M80	O-RING ANILLO O	1	1				
47	97E95–06520	BOLT, HEXAGON W/W DEEP RECESS TORNILLO HEXAGONAL CON RONDONA	2	2				
48	664–45567–01	SHIM (T:0.10MM) LAINA (T:0.10MM)	1	1				UR UR
	664–45567–10	SHIM (T:0.12MM) LAINA (T:0.12MM)	1	1				UR UR
	664–45567–20	SHIM (T:0.15MM) LAINA (T:0.15MM)	1	1				UR UR
	664–45567–30	SHIM (T:0.18MM) LAINA (T:0.18MM)	1	1				UR UR
	664–45567–40	SHIM (T:0.30MM) LAINA (T:0.30MM)	1	1				UR UR
	664–45567–50	SHIM (T:0.40MM) LAINA (T:0.40MM)	1	1				UR UR
	664–45567–60	SHIM (T:0.50MM) LAINA (T:0.50MM)	1	1				UR UR

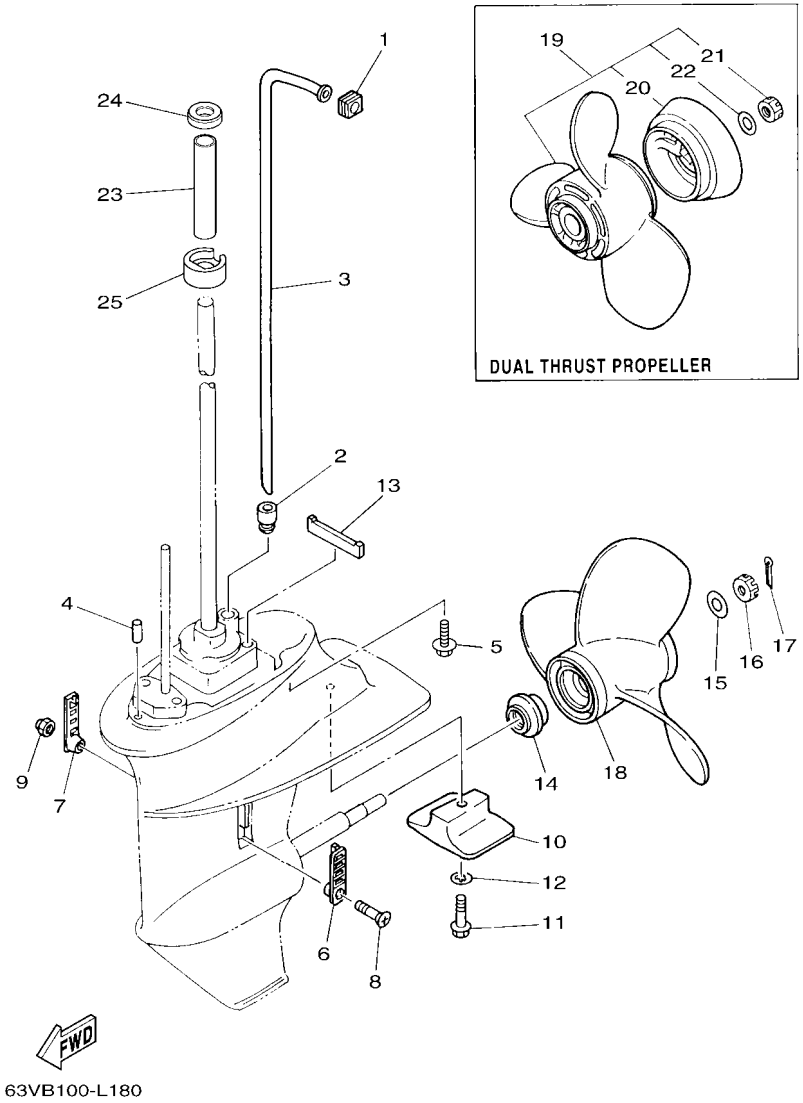

FIG. 19 LOWER CASING & DRIVE 2 — IMPULSOR E INFERIOR 2

REF. NO.	PART NO. CODIGO Nº	DESCRIPTION DESCRIPCION	6MR1	63WP				REMARKS OBSERVACIONES
1	63V–44365–11	DAMPER, WATER SEAL 1 HULE DE SELLO DE AGUA 1	1	1				
2	63V–44368–01	RUBBER, WATER SEAL 4 CAUCHO AGUA SERTISSURE 4	1	1				
3	63V–44361–01	TUBE, WATER 1 TUBO DE AGUA 1	1	1				S(17.3") S(17.3")
	63V–44361–11	TUBE, WATER 1 TUBO DE AGUA 1	1	1				L(22.3") L(22.3")
4	93604–12M07	PIN, DOWEL PASADOR DE CLAVIJA	2	2				
5	97E75–08530	BOLT, HEXAGON W/W DEEP RECESS TORNILLO HEXAGONAL CON RONDONA	4	4				
6	6G1–45214–00	COVER, WATER INLET 1 CUBIERTA, ENTRADA AGUA 1	1	1				
7	63V–45215–00	COVER, WATER INLET 2 CUBIERTA, ENTRADA AGUA 2	1	1				
8	90152–05011	SCREW, COUNTERSUNK TORNILLO EMBUTIDO	1	1				
9	90185–05002	NUT, NYLON TUERCA AUTOBLOCANTE	1	1				
10	61N–45251–01	ANODE CATODE	1	1				
11	95D95–06030	BOLT, FLANGE DEEP RECESS CERROJO, REBORDE HUECO PROFUND	1	1				
12	92990–06300	WASHER, INTERNAL TOOTH ARANDELA PLANA	1	1				
13	63V–45375–00	DAMPER, SEAL GOMA DE SELLO	1	1				
14	6E7–45987–01	SPACER 1 ESPACIADOR 1	1	1				
15	90201–10M01	WASHER, PLATE ARANDELA PLANA	1	1				
16	90171–10M01	NUT, CASTLE TUERCA ENTALLADA	1	1				
17	91490–30025	PIN. COTTER CHAVETA	1	1				
18	683–45949–00	PROPELLER (3X9-1/2"X6-1/2"-J) PROPELA (3X9-1/2"X6-1/2"-J)	1	1				UR UR
	63V–45947–00	PROPELLER (3X9-1/4"X8"-J) PROPELA (3X9-1/4"X8"-J)	1	1				UR UR
	683–45947–00	PROPELLER (3X9-1/4"X8"-J) PROPELA (3X9-1/4"X8"-J)	1	1				UR UR
	683–45945–00	PROPELLER (3X9-1/4"X9"-J) PROPELA (3X9-1/4˚X9˚-J)	1	1				UR UR
	63V–45945–10	PROPELLER (3X9-1/4"X9"-J1) PROPELA (3X9-1/4"X9"-J1)	1	1				UR UR
	683–45952–00	PROPELLER (3X9-1/4"X9-3/4"-J) PROPELA (3X9-1/4"X9-3/4"-J)	1	1				UR UR
	683–45943–00	PROPELLER (3X9-1/4"X10-1/2"-J) PROPERA (3X9-1/4"X10-1/2"-J)	1	1				UR UR
	63V–45952–10	PROPELLER (3X9-1/4"X10"-J1) PROPELA (3X9-1/4"X10"-J1)	1	1				UR UR
	63V–45943–10	PROPELLER (3X9-1/4"X11"-J1) PROPELA (3X9-1/4"X11"-J1)	1	1				UR UR

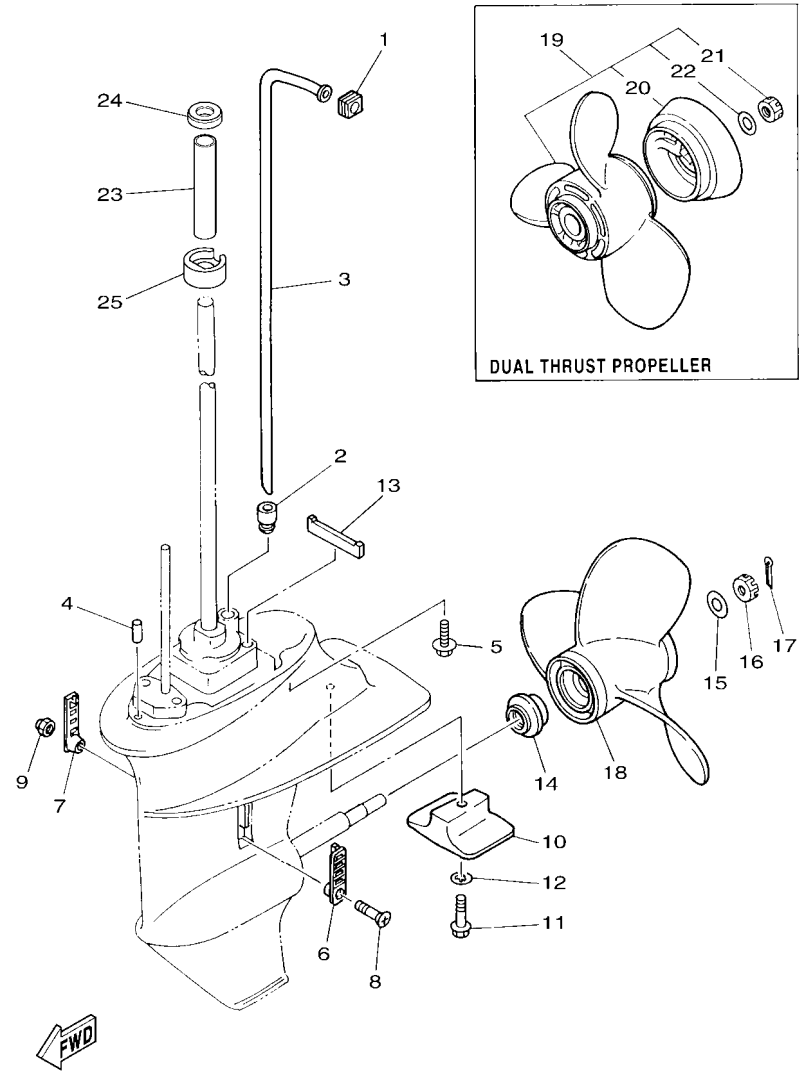

63VB100-L180

FIG. 19 LOWER CASING & DRIVE 2 — IMPULSOR E INFERIOR 2

REF. NO.	PART NO. CODIGO Nº	DESCRIPTION DESCRIPCION	6MR1	63WP				REMARKS OBSERVACIONES
18	683–45941–00	PROPELLER (3X9-1/4"X12"-J) PROPERA (3X9-1/4"X12"-J)	1	1				UR UR
19	683–W4592–02	PROPELLER (3X9-3/4"X6-1/2"-J) PROPELA (3X9-3/4"X6-1/2"-J)	1	1				UR UR
	683–W4591–02	PROPELLER (3X9-3/4"X8"-J) PROPELA (3X9-3/4"X8"-J)	1	1				UR UR
20	6E7–45986–00	.RING, DEFLECTOR .ANILLO REFLECTOR	1	1				
21	90171–10M07	.NUT, CASTLE .TUERCA ENTALLADA	1	1				
22	90201–10M02	.WASHER, PLATE .ARANDELA PLANA	1	1				
23	63V–44362–00	TUBE, WATER 2 TUBO DE AGUA 2	1	1				L(22.3") L(22.3")
24	63V–44375–01	GROMMET, WATER TUBE 1 TAPON, TUBO DE AGUA 1	1	1				L(22.3") L(22.3")
25	63V–44376–01	GROMMET, WATER TUBE 2 TAPON, TUBO DE AGUA 2	1	1				L(22.3") L(22.3")

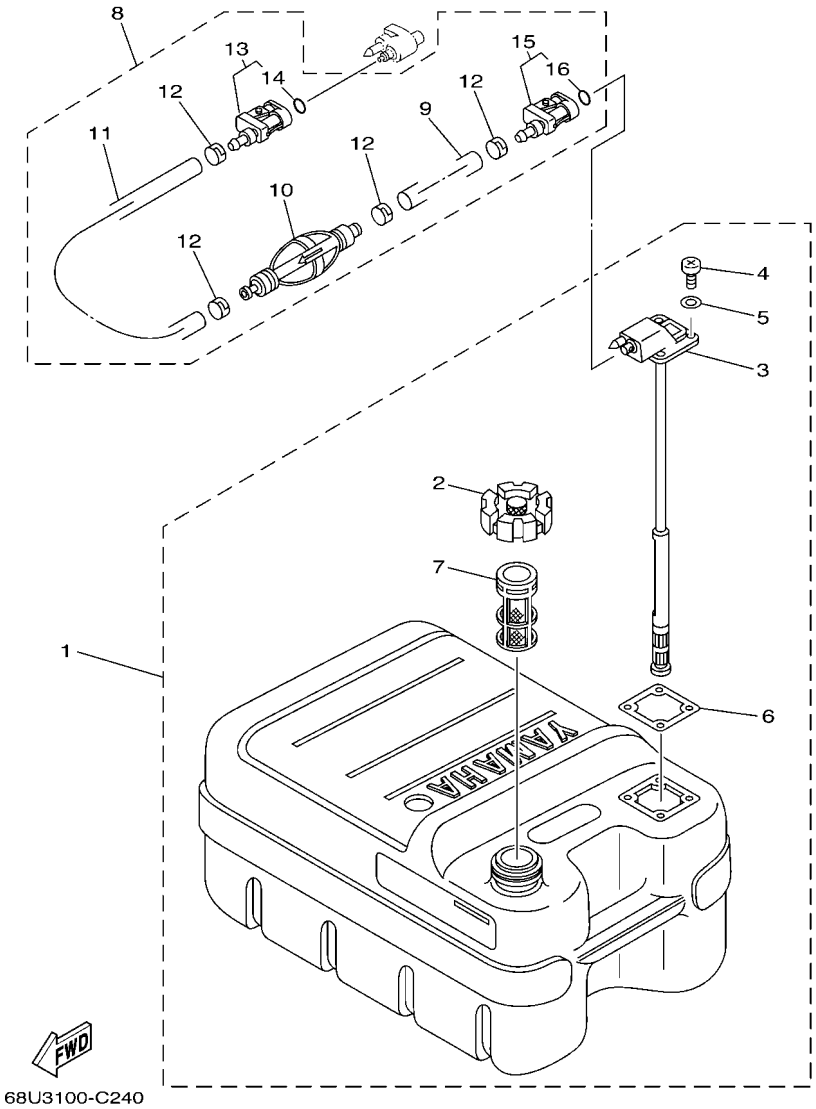

FIG. 20 FUEL TANK — DEPOSITO DE COMBUSTIBLE

REF. NO.	PART NO. CODIGO Nº	DESCRIPTION DESCRIPCION	6MR1	63WP				REMARKS OBSERVACIONES
1	6YJ–24201–21	FUEL TANK ASSY (24L) TANQUE DEL COMBUSTIBLE (24L)	1	1				AP AP
2	6YJ–24610–01	.CAP ASSY .TAPA COMPLETA	1	1				
3	6YJ–24260–11	.FUEL METER ASSY .MEDIDOR DE COMBUSTIBLE COMPL.	1	1				
4	90157–05M19	.SCREW, PAN HEAD .TORNILLO CABEZA CONICA PLANA	4	4				
5	6Y1–24329–00	.SEAL .SELLO	4	4				
6	6Y1–24268–01	.GASKET, FUEL METER .EMPAQ MEDIDOR DE COMBUSTIBLE	1	1				
7	6YJ–24167–00	.STRAINER .COLADOR	1	1				
8	61J–24306–04	FUEL PIPE COMP. 1 TUBO COMBUST. COMPL 1	1	1				AP AP
9	90445–11M06	.HOSE (L2050) .MANGUERA (L2050)	1	1				
10	61J–24360–00	.PRIMER PUMP ASSY .SOPORTE BOMBA	1	1				
11	90445–11M05	.HOSE (L850) .MANGUERA (L850)	1	1				
12	650–24351–51	.BAND 1 .ABRAZADERA 1	4	4				
13	6G1–24305–05	.FUEL PIPE JOINT COMP. 2 .CONECTOR MANGUERA COMBUST. 2	1	1				
14	93210–08287	..O-RING ..ANILLO O	1	1				
15	6Y1–24305–06	.FUEL PIPE JOINT COMP. 2 .CONECTOR MANGUERA COMBUST. 2	1	1				
16	93210–08287	..O-RING ..ANILLO O	1	1				

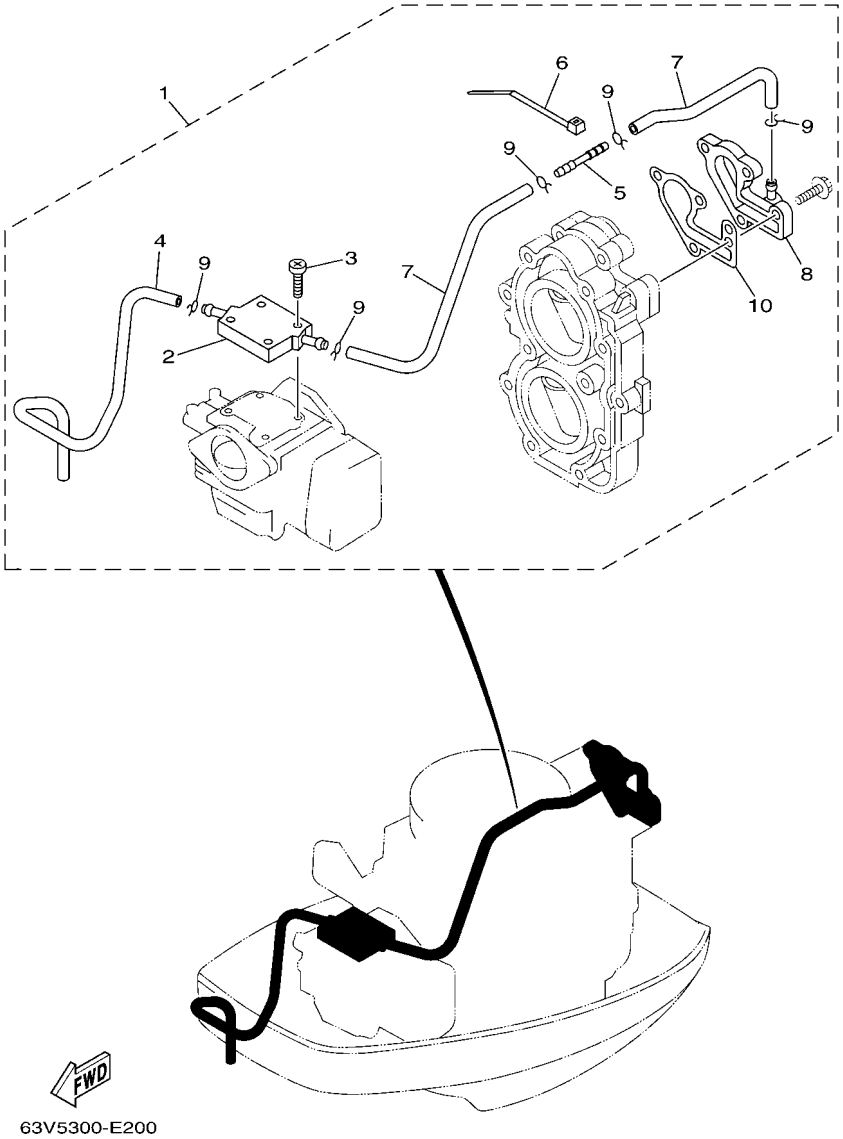

FIG. 21 OPTIONAL PARTS 1 — PARTES OPCIONALES 1

REF. NO.	PART NO. CODIGO Nº	DESCRIPTION DESCRIPCION	6MR1	63WP				REMARKS OBSERVACIONES
1	63V–12440–51	HEAT EXCHANGER ASSY INTERCAMBIADOR DE CALOR COMPL	1	1				
2	63V–12466–50	.EXCHANGER, HEAT .CAMBIADOR DE CALOR	1	1				
3	97885–04020	.SCREW, PAN HEAD .TORNILLO A MUESCA	4	4				
4	90445–09M08	.HOSE (L550) .TUBO (L550)	1	1				
5	6E5–83558–10	.END, NIPPLE .EXTREMO DE NIPLE	1	1				
6	90465–11M10	.CLAMP .BRIDA	1	1				
7	90445–09M54	.HOSE (L225) .TUBO (L225)	2	2				
8	63V–12413–50	.COVER, THERMOSTAT .CUBIERTA TERMOSTATO	1	1				
9	90467–08M10	.CLIP .PRESILLA	5	5				
10	682–12414–A1	.GASKET, COVER .EMPAQUE	1	1				

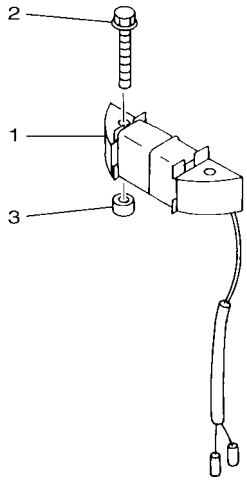

65DC280-L190

FIG. 22 OPTIONAL PARTS 2 — PARTES OPCIONALES 2

REF. NO.	PART NO. CODIGO Nº	DESCRIPTION DESCRIPCION	6MR1	63WP				REMARKS OBSERVACIONES
1	63V–85533–00	COIL, LIGHTING BOBINA DE LUZ	1	1				
2	90105–06M69	BOLT, FLANGE TORNILLO	2	2				
3	90387–06M24	COLLAR ESPACIADOR	2	2				

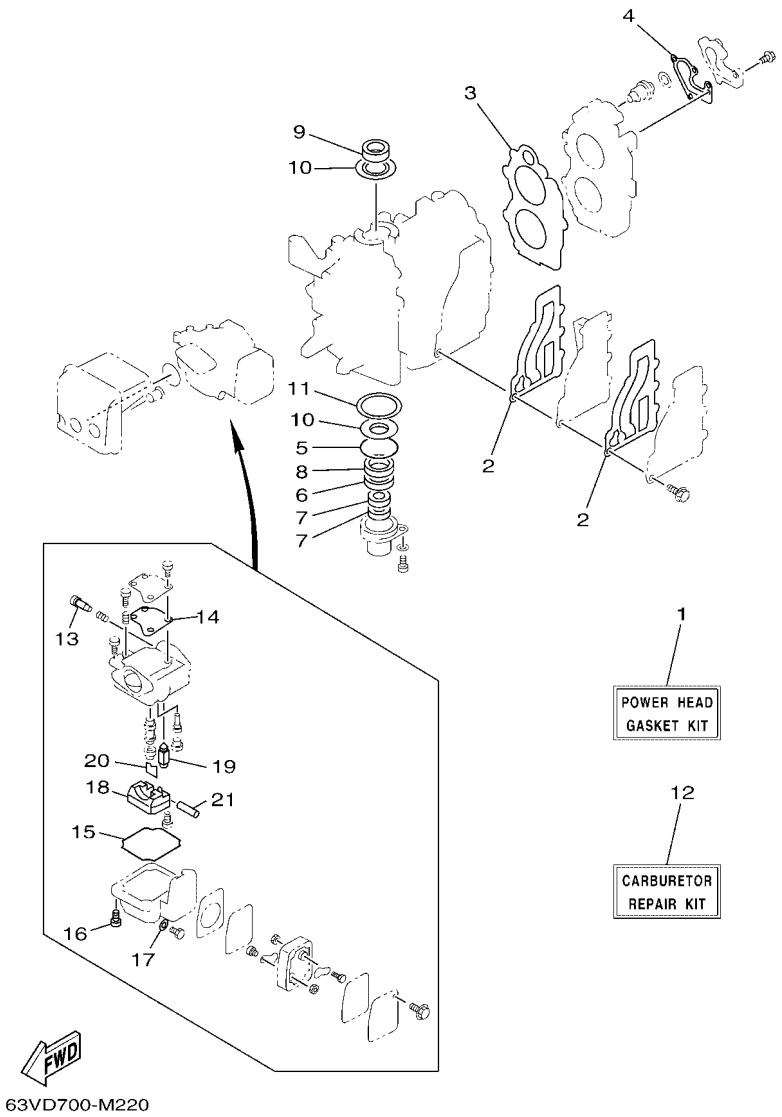

FIG. 23 REPAIR KIT 1 — ESTUCHE REPARATION 1

REF. NO.	PART NO. CODIGO Nº	DESCRIPTION DESCRIPCION	6MR1	63WP				REMARKS OBSERVACIONES
1	63V–W0001–02	POWER HEAD GASKET KIT JUEGO DE EMPAQUE DE MOTOR	1	1				
2	63V–41112–A0	.GASKET, EXHAUST INNER COVER .EMPAQUE	2	2				
3	63V–11181–A2	.GASKET, CYLINDER HEAD 1 .JUNTA, DE CULATA 1	1	1				
4	682–12414–A1	.GASKET, COVER .EMPAQUE	1	1				
5	93210–46M16	.O-RING .ANILLO O	1	1				
6	93101–25018	.OIL SEAL .SELLO ACEITE	1	1				
7	93101–13018	.OIL SEAL .SELLO ACEITE	2	2				
8	93102–25M48	.OIL SEAL .SELLO ACEITE	1	1				
9	93110–23M00	.OIL SEAL .SELLO ACEITE	1	1				
10	63V–11445–00	.SPACER .ESPACIADOR	2	2				
11	90201–46M29	.WASHER, PLATE .ARANDELA PLANA	1	1				
12	63V–W0093–02	CARBURETOR REPAIR KIT KIT REPARACION CARBURADOR	1	1				
13	679–14923–01	.SCREW, PILOT .TORNILLO DE AJUSTE	1	1				
14	63V–14126–00	.GASKET .EMPAQUE	1	1				
15	63V–14984–00	.GASKET, FLOAT CHAMBER .EMPAQUE CAMARA DE BOIA	1	1				
16	97980–04114	.SCREW, WITH WASHER .TORNILLO, CON ARANDELA	4	4				
17	65W–14398–00	.GASKET .EMPAQUE	1	1				
18	63V–14985–00	.FLOAT .BOIA	1	1				
19	6AH–14546–00	.VALVE, NEEDLE .VALVULA DE AGUJA	1	1				
20	633–14159–00	.CLIP .PRESILLA	1	1				
21	6H4–14548–00	.PIN, FLOAT ARM .PASADOR DE BRAZO DE BOIA	1	1				

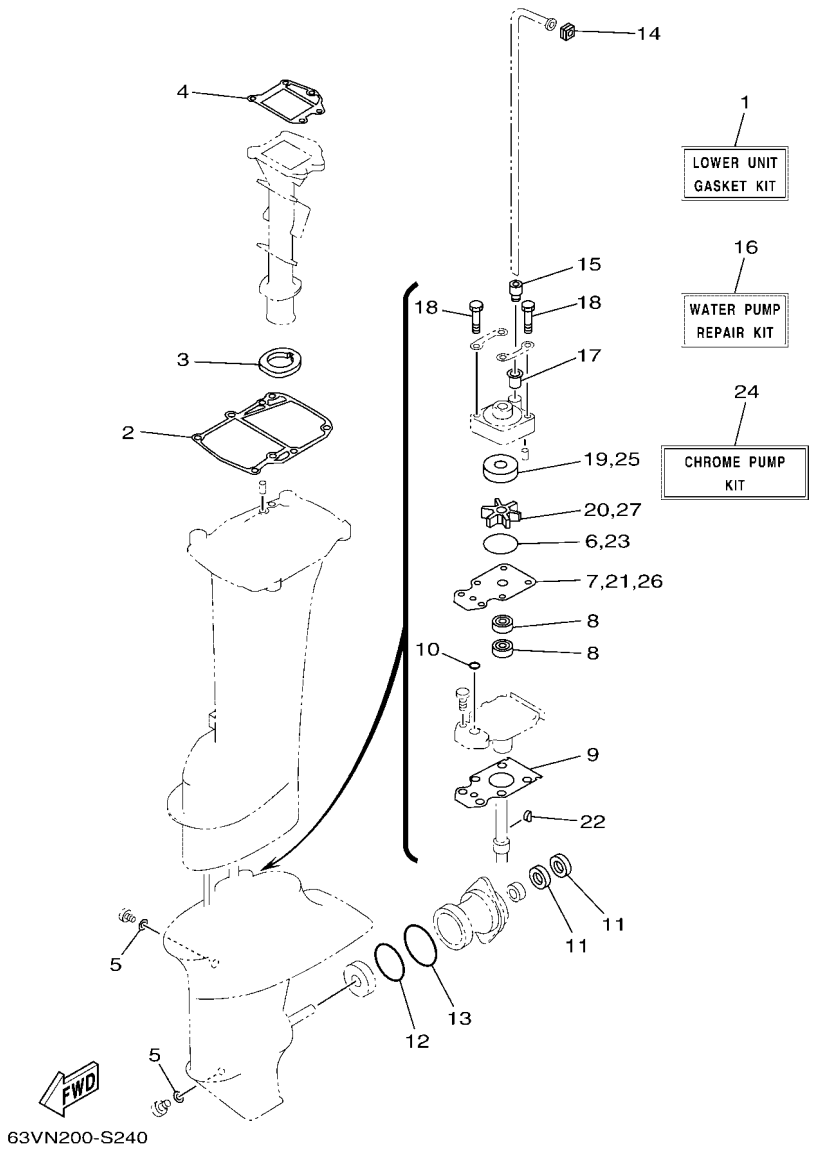

FIG. 24 REPAIR KIT 2 — ESTUCHE REPARATION 2

REF. NO.	PART NO. CODIGO Nº	DESCRIPTION DESCRIPCION	6MR1	63WP				REMARKS OBSERVACIONES
1	63V–W0001–23	LOWER UNIT GASKET KIT JUEGO DE EMPAQUE UNIDAD INFER.	1	1				
2	63V–45113–A1	.GASKET, UPPER CASING .EMPAQUE	1	1				
3	63V–41135–01	.GASKET, EXHAUST MANIFOLD .EMPAQUE	1	1				
4	63V–41133–A1	.GASKET, EXHAUST MANIFOLD 1 .EMPAQUE ESCAPE MULTIPLE	1	1				
5	90430–08003	.GASKET .JUNTA	2	2				
6	93210–44398	.O-RING .ANILLO O	1	1				
7	63V–44323–00	.OUTER PLATE, CARTRIDGE .PLACA EXTERIOR DEL CARTUCHO	1	1				
8	93101–20048	.OIL SEAL .SELLO ACEITE	2	2				
9	63V–45315–A0	.PACKING, LOWER CASING .EMPAQUE	1	1				
10	93210–06ME6	.O-RING .ANILLO O	1	1				
11	93101–17054	.OIL SEAL .SELLO ACEITE	2	2				
12	93210–57M09	.O-RING .ANILLO O	1	1				
13	93210–56M80	.O-RING .ANILLO O	1	1				
14	63V–44365–11	.DAMPER, WATER SEAL 1 .HULE DE SELLO DE AGUA 1	1	1				
15	63V–44368–01	.RUBBER, WATER SEAL 4 .CAUCHO AGUA SERTISSURE 4	1	1				
16	63V–W0078–04	WATER PUMP REPAIR KIT ESTUCHE REPARACION BOMBA AGUA	1	1				
17	647–44366–01	.DAMPER, WATER SEAL 2 .GOMA DEL SELLO DE AGUA 2	1	1				
18	97D95–08045	.BOLT, HEXAGON DEEP RECESS .TORNILLO HEXAGONAL	4	4				
19	63V–44322–00	.INSERT, CARTRIDGE .CARTUCHO	1	1				
20	63V–44352–01	.IMPELLER .IMPULSOR	1	1				
21	63V–44323–00	.OUTER PLATE, CARTRIDGE .PLACA EXTERIOR DEL CARTUCHO	1	1				
22	63V–44338–00	.KEY, WOODRUFF .CUNA WOODRUFF	1	1				
23	93210–44398	.O-RING .ANILLO O	1	1				
24	63V–W0078–0A	CHROME PUMP KIT ESTUCHE REPARACION BOMBA AGUA	1	1				
25	63V–44322–40	.INSERT, CARTRIDGE .CARTUCHO	1	1				
26	63V–44323–40	.OUTER PLATE, CARTRIDGE .PLACA EXTERIOR DEL CARTUCHO	1	1				
27	63V–44352–01	.IMPELLER .IMPULSOR	1	1				

NUMERICAL INDEX
INDICE NUMERICO

PART NO. CODIGO Nº	REF. NO.
6E7–11111–01–1S	3 – 18
63V–11181–A2	3 – 19
	23 – 3
682–11325–00	1 – 1
	3 – 8
676–11372–00	3 – 15
63V–11400–02	4 – 7
63V–11412–01	4 – 8
63V–11422–01	4 – 9
63V–11432–01	4 – 10
63V–11442–01	4 – 11
63V–11445–00	4 – 27
	23 – 10
63V–11515–02	4 – 13
682–11610–01	4 – 21
682–11610–11	4 – 21
682–11610–21	4 – 21
6E7–11631–00–97	4 – 20
634–11633–00	4 – 22
6E7–11635–00	4 – 20
6E7–11636–00	4 – 20
6K4–11651–00	4 – 15
682–11681–00	4 – 14
6E5–12411–30	1 – 2
	3 – 22
688–12412–00	3 – 23
682–12413–00–1S	3 – 21
63V–12413–50	21 – 8
682–12414–A1	1 – 3
	3 – 25
	21 – 10
	23 – 4
63V–12440–51	21 – 1
63V–12466–50	21 – 2
63W–13610–00	5 – 1
63V–13610–10	5 – 1
63V–14126–00	6 – 5
	23 – 14
633–14159–00	6 – 20
	23 – 20
63V–14301–03	6 – 1
65W–14398–00	6 – 16
	23 – 17
63V–14440–A0	5 – 8
624–14485–00	3 – 3
650–14485–03	3 – 4
63V–14497–02	13 – 1
63V–14523–00	6 – 9

PART NO. CODIGO Nº	REF. NO.
63V–14527–00	6 – 4
6AH–14546–00	6 – 19
	23 – 19
6H4–14548–00	6 – 21
	23 – 21
697–14555–00	6 – 3
65L–14565–00	6 – 6
679–14923–01	6 – 2
	23 – 13
676–14943–29	6 – 14
63V–14947–00	6 – 13
6G1–14948–06	6 – 7
679–14966–00	6 – 8
63V–14980–02	6 – 12
63V–14984–00	6 – 11
	23 – 15
63V–14985–00	6 – 18
	23 – 18
65W–14992–09	6 – 17
63V–15100–03	3 – 2
63V–15396–01–CA	4 – 1
63V–15705–10	8 – 10
63V–15710–21	8 – 1
63V–15711–10	8 – 2
63V–15713–00	8 – 7
63V–15714–00	8 – 5
63V–15716–10	8 – 9
63V–15726–00	8 – 23
63V–15734–00	8 – 22
63V–15741–00	8 – 6
63V–15744–00	8 – 13
63V–15746–10	13 – 34
6L2–15747–00	13 – 38
63V–15748–00	8 – 21
63V–15753–00	8 – 8
6G1–15755–00	8 – 18
63V–15762–00	8 – 25
63V–15764–00	8 – 15
63V–15767–01	8 – 11
63V–15770–01	13 – 40
6G1–15779–00	8 – 19
68T–15784–00	8 – 12
63V–15793–00	8 – 16
68T–15793–00	8 – 14
63V–15794–00	8 – 20
63V–15795–01	8 – 3
6YJ–24167–00	20 – 7
6YJ–24201–21	20 – 1

PART NO. CODIGO Nº	REF. NO.
6YJ–24260–11	20 – 3
6Y1–24268–01	20 – 6
6G1–24304–10	7 – 1
6G1–24305–05	20 – 13
6Y1–24305–06	20 – 15
61J–24306–04	20 – 8
6Y1–24329–00	20 – 5
650–24351–51	20 – 12
61J–24360–00	20 – 10
63V–24396–01	7 – 12
63V–24411–00	6 – 27
6G1–24411–00	6 – 29
6G1–24412–01	6 – 28
6L5–24421–00	6 – 31
6G1–24431–01	6 – 30
6G1–24452–00	6 – 26
61N–24521–00	7 – 5
61N–24560–00	7 – 3
61N–24563–00	1 – 5
	7 – 4
682–24566–01	7 – 10
6YJ–24610–01	20 – 2
6L2–26301–01	12 – 22
63V–41111–00–1S	3 – 12
63V–41112–A0	3 – 13
	23 – 2
63V–41113–00–1S	3 – 14
65F–41131–00–CA	17 – 7
63V–41133–A1	17 – 9
	24 – 4
63V–41135–01	17 – 8
	24 – 3
63V–41211–00	13 – 17
63V–41223–00	13 – 15
6H4–41237–00	13 – 12
63V–41238–00	13 – 11
63V–41252–00	5 – 17
63V–41253–00	5 – 4
63V–41256–00	5 – 14
63V–41257–00	5 – 7
63V–41262–00	5 – 6
661–41262–02	5 – 18
	13 – 18
	13 – 39
6H4–41271–02	5 – 13
689–41273–00	5 – 15
6J8–41274–01	5 – 16
63V–41283–01	13 – 16

PART NO. CODIGO Nº	REF. NO.
63V–41611–00	9 – 4
63V–41631–01	13 – 6
63V–41638–00	13 – 19
63V–42111–01–8D	12 – 1
664–42119–00	12 – 12
6G1–42125–01	12 – 9
6G1–42126–00	12 – 10
6G1–42131–02	12 – 6
6H2–42137–10	12 – 13
6G1–42138–01	12 – 19
63V–42154–00	14 – 10
6E0–42159–02	12 – 20
6G1–42177–01	12 – 14
63V–42192–00	14 – 14
63V–42511–04–8D	16 – 6
63V–42528–00	16 – 2
65F–42537–00	16 – 8
63V–42610–03	2 – 1
63W–42610–03	2 – 1
63V–42613–A0–8D	2 – 8
63V–42615–00	2 – 3
63V–4261A–01	2 – 2
6L2–42647–00	2 – 6
6G1–42651–02	2 – 4
63V–42675–41	2 – 10
63V–42676–41	2 – 11
63W–42678–40	2 – 12
63V–42678–41	2 – 12
6E0–42681–41	2 – 13
	2 – 14
63V–42711–03–8D	11 – 1
63V–42716–02	11 – 18
682–42724–01	11 – 2
682–42725–02	11 – 3
63V–42726–01	11 – 4
682–42727–01	11 – 5
6G1–42748–01	11 – 6
6EE–42794–40	11 – 21
63V–42815–01–8D	11 – 8
6E7–42816–00	11 – 9
63V–43111–07–8D	15 – 1
63V–43112–08–8D	15 – 2
6J8–43113–01	15 – 12
648–43114–01	15 – 7
6E7–43116–00	15 – 6
6E0–43118–01	15 – 4
63W–43131–01	15 – 8
689–43160–00	15 – 18

PART NO. CODIGO Nº	REF. NO.
689–43165–00	15 – 19
63V–43181–00	15 – 43
63V–43191–00	15 – 25
63V–43311–03–8D	15 – 22
682–43318–01	15 – 24
66M–43350–01	15 – 29
689–43373–02	16 – 3
66R–43611–00	15 – 37
63V–43614–10	15 – 34
66R–43615–00	15 – 36
66R–43617–00	15 – 41
66M–43630–01	15 – 23
63V–43641–01	15 – 31
63V–43656–00	15 – 42
63V–43659–00	15 – 39
63V–44111–02	12 – 23
63V–44116–00	13 – 28
63V–44121–01	13 – 23
63V–44122–01	13 – 29
63V–44123–02	13 – 22
63V–44124–02	12 – 28
63V–44125–00	13 – 25
63V–44143–01	13 – 31
61N–44146–00	13 – 33
63V–44150–00	18 – 27
63V–44150–10	18 – 27
6X3–44191–00	12 – 27
688–44194–00	13 – 10
689–44194–01	13 – 2
63V–44301–00	18 – 11
63V–44301–40	18 – 11
63V–44322–00	18 – 12
	24 – 19
63V–44322–40	18 – 12
	24 – 25
63V–44323–00	18 – 17
	24 – 7
	24 – 21
63V–44323–40	18 – 17
	24 – 26
63V–44328–01	18 – 20
63V–44338–00	18 – 15
	24 – 22
63V–44352–01	18 – 14
	24 – 20
	24 – 27
63V–44361–01	19 – 3
63V–44361–11	19 – 3

PART NO. CODIGO Nº	REF. NO.
63V–44362–00	19 – 23
63V–44365–11	19 – 1
	24 – 14
647–44366–01	18 – 13
	24 – 17
63V–44366–02	16 – 17
63V–44368–01	19 – 2
	24 – 15
63V–44375–01	19 – 24
63V–44376–01	19 – 25
6BL–44391–00	11 – 19
63V–44514–01–CA	16 – 13
63V–44526–00	16 – 14
63V–44551–01–8D	16 – 20
682–44555–00	16 – 22
63V–44557–01	16 – 21
63V–45111–05–8D	17 – 1
63V–45111–15–8D	17 – 1
63V–45113–A1	17 – 5
	24 – 2
63V–45114–A1	16 – 18
63V–45126–01	17 – 2
6G1–45214–00	19 – 6
63V–45215–00	19 – 7
61N–45251–01	1 – 8
	19 – 10
63V–45300–05–8D	18 – 1
63V–45300–15–8D	18 – 1
63V–45311–01–8D	18 – 2
63V–45315–A0	18 – 24
	24 – 9
626–45316–09	18 – 22
682–45318–00	17 – 11
63V–45331–00–CA	18 – 21
683–45361–02–8D	18 – 41
63V–45375–00	19 – 13
63V–45510–01	18 – 28
63V–45510–11	18 – 28
63V–45536–00	18 – 4
63V–45551–00	18 – 29
6E7–45560–01	18 – 31
664–45567–01	18 – 48
664–45567–10	18 – 48
664–45567–20	18 – 48
664–45567–30	18 – 48
664–45567–40	18 – 48
664–45567–50	18 – 48
664–45567–60	18 – 48

NUMERICAL INDEX
INDICE NUMERICO

PART NO. CODIGO Nº	REF. NO.
6E7–45571–00	18 – 32
626–45577–00	18 – 33
626–45577–10	18 – 33
626–45577–20	18 – 33
626–45577–30	18 – 33
626–45577–40	18 – 33
6E8–45587–10	18 – 7
6E8–45587–30	18 – 7
683–45611–00	18 – 35
682–45631–00	18 – 37
648–45633–11	18 – 39
650–45635–00	18 – 36
683–45941–00	19 – 18
683–45943–00	19 – 18
63V–45943–10	19 – 18
683–45945–00	19 – 18
63V–45945–10	19 – 18
63V–45947–00	19 – 18
683–45947–00	19 – 18
683–45949–00	19 – 18
683–45952–00	19 – 18
63V–45952–10	19 – 18
6E7–45986–00	19 – 20
6E7–45987–01	19 – 14
6FM–48344–00	14 – 7
63V–48501–00	14 – 1
63V–48511–01	14 – 22
63V–48531–00	14 – 2
63V–48534–00	14 – 17
682–48538–50	14 – 3
63V–48544–00	14 – 19
6EE–81994–40	8 – 28
6EE–81995–40	8 – 27
63V–82127–00	16 – 5
663–82370–01	10 – 8
662–82519–00	10 – 11
682–82556–00	12 – 32
65W–82575–01	12 – 31
689–8257Y–00	12 – 33
6E5–83558–10	21 – 5
63V–85520–01	9 – 3
63V–85533–00	22 – 1
63V–85540–03	10 – 1
63V–85550–11	9 – 1
63V–85570–10	10 – 5
63V–85580–01	9 – 2
63V–W0001–02	23 – 1
63V–W0001–23	24 – 1

PART NO. CODIGO Nº	REF. NO.
682–W0004–00	5 – 2
63V–W0078–04	1 – 9
	24 – 16
63V–W0078–0A	24 – 24
63V–W0090–04–1S	3 – 1
63V–W0093–02	23 – 12
656–W2810–03	7 – 13
683–W4591–02	19 – 19
683–W4592–02	19 – 19
90101–06M29	15 – 15
90105–06M07	16 – 4
90105–06M68	9 – 6
90105–06M69	22 – 2
90105–07M05	3 – 20
90109–06M84	15 – 44
90116–08016	12 – 7
90116–08M54	16 – 12
90119–06308	5 – 12
90119–06M05	12 – 24
90119–06MA2	3 – 26
90119–06MA4	3 – 17
90119–08M07	3 – 11
90152–05011	12 – 15
	19 – 8
90157–05014	15 – 32
90157–05M19	20 – 4
90157–06M06	17 – 3
90159–05M25	13 – 24
	13 – 26
	13 – 30
	14 – 20
90164–05M03	5 – 20
90170–12066	9 – 9
90171–10M01	19 – 16
90171–10M07	19 – 21
90179–06M28	16 – 25
90179–08M06	18 – 30
90185–05002	19 – 9
90185–08057	12 – 8
	14 – 24
90185–22043	15 – 13
90201–04M06	14 – 15
90201–05M09	5 – 19
90201–06068	11 – 12
90201–08M12	14 – 9
90201–10M01	19 – 15
90201–10M02	12 – 16
	14 – 13

PART NO. CODIGO Nº	REF. NO.
90201–10M02	19 – 22
90201–12472	9 – 10
90201–14377	4 – 24
90201–15017	18 – 6
90201–16M03	3 – 24
90201–17682	18 – 34
90201–46M29	4 – 28
	23 – 11
90202–06009	12 – 29
90202–07M60	15 – 26
90202–22M54	15 – 9
90202–36M55	12 – 4
90206–10M04	14 – 12
90206–12052	11 – 11
90206–15M18	12 – 26
90206–36M21	12 – 3
90209–14011	18 – 5
90209–20M23	4 – 17
90209–40008	16 – 7
90243–04M01	15 – 5
90250–05010	18 – 38
90266–04M04	2 – 5
	2 – 7
90269–07015	15 – 3
90280–05013	9 – 8
90340–08002	18 – 9
90386–07M95	15 – 28
90386–08032	12 – 18
90386–10009	14 – 21
90386–10025	14 – 11
90386–12M45	11 – 10
90386–22M94	15 – 10
	15 – 11
90386–30048	16 – 9
90386–30M60	16 – 11
90386–33M96	12 – 5
90386–34M97	12 – 2
90387–06M05	8 – 4
90387–06M06	13 – 35
90387–06M13	15 – 14
90387–06M15	5 – 9
90387–06M24	22 – 3
90387–06M50	13 – 3
90387–06M52	11 – 16
90387–06M53	9 – 5
90387–06M86	12 – 25
90387–07M07	15 – 27
90387–16002	16 – 16

PART NO. CODIGO Nº	REF. NO.
90430–08003	1 – 7
	18 – 10
	24 – 5
90445–07M08	3 – 5
	3 – 6
90445–09104	3 – 16
90445–09M00	7 – 8
90445–09M08	21 – 4
90445–09M54	21 – 7
90445–11M05	20 – 11
90445–11M06	20 – 9
90464–08M02	10 – 9
90464–15M11	10 – 3
90465–08M61	10 – 4
90465–11M10	21 – 6
90465–25M57	11 – 20
90467–06016	3 – 7
90467–08004	7 – 9
90467–08M10	21 – 9
90468–10005	13 – 14
90468–18008	12 – 30
	14 – 8
90480–06M19	11 – 7
90480–10M16	13 – 41
90480–12M25	5 – 10
90480–15M31	11 – 17
90480–25161	10 – 7
90501–10326	6 – 10
90501–12M16	13 – 9
90501–14M06	18 – 40
90501–23215	12 – 17
90502–10M07	15 – 21
90507–20M00	15 – 30
90508–08M39	13 – 36
90508–16M37	13 – 20
90508–18M41	15 – 35
90508–20M38	13 – 21
91490–16010	12 – 11
91490–16018	8 – 24
91490–20010	14 – 16
91490–30025	19 – 17
91609–20008	4 – 18
91690–20010	5 – 5
91690–30008	15 – 20
91690–30012	14 – 4
92990–06300	19 – 12
92995–06600	15 – 16
93101–13018	4 – 5

PART NO. CODIGO Nº	REF. NO.
93101–13018	23 – 7
93101–17054	18 – 44
	24 – 11
93101–20048	18 – 23
	24 – 8
93101–25018	4 – 3
	23 – 6
93102–25M48	4 – 4
	23 – 8
93110–23M00	4 – 26
	23 – 9
93210–06ME6	18 – 25
	24 – 10
93210–08287	20 – 14
	20 – 16
93210–29M94	16 – 10
93210–32738	1 – 6
	7 – 6
93210–35M86	5 – 11
93210–44398	18 – 16
	24 – 6
	24 – 23
93210–46M16	4 – 2
	23 – 5
93210–56M80	18 – 46
	24 – 13
93210–57M09	18 – 45
	24 – 12
93306–00501	18 – 42
93306–205U7	4 – 12
93310–620V5	4 – 16
93315–314V8	18 – 3
93315–317U2	18 – 43
93332–00005	18 – 8
93420–30042	17 – 12
93430–04M03	15 – 38
93440–52009	4 – 19
93450–15023	4 – 25
93602–14104	4 – 23
93604–12M07	18 – 18
	19 – 4
93606–12019	3 – 10
	17 – 4
93700–06M03	16 – 1
94702–00217	1 – 4
	3 – 27
94702–00271	1 – 4
	3 – 27

PART NO. CODIGO Nº	REF. NO.
95023–06012	9 – 7
95380–03600	6 – 24
95380–05700	13 – 13
95380–06600	13 – 8
	14 – 6
95380–06700	11 – 14
	13 – 32
	15 – 17
95380–08600	7 – 7
	16 – 15
95780–08300	14 – 18
95D95–06012	13 – 27
95D95–06030	19 – 11
95D95–06065	13 – 4
97013–06010	7 – 11
97080–08025	18 – 26
97595–06516	14 – 5
97885–04020	21 – 3
97885–05012	12 – 21
97885–06030	13 – 7
97980–04114	6 – 15
	23 – 16
97980–04123	6 – 25
97D95–06025	11 – 13
97D95–08045	18 – 19
	24 – 18
97E75–06555	16 – 23
97E75–06575	16 – 24
97E75–08530	17 – 6
	19 – 5
97E75–08535	14 – 23
97E95–06512	10 – 10
	10 – 12
	13 – 5
97E95–06516	2 – 9
	4 – 6
97E95–06518	10 – 6
	16 – 19
97E95–06520	5 – 3
	7 – 2
	8 – 26
	10 – 2
	13 – 37
	17 – 10
	18 – 47
97E95–06525	11 – 15
98580–04006	6 – 32
98580–04008	6 – 22

NUMERICAL INDEX
INDICE NUMERICO

PART NO. CODIGO Nº	REF. NO.	PART NO. CODIGO Nº	REF. NO.	PART NO. CODIGO Nº	REF. NO.	PART NO. CODIGO Nº	REF. NO.	PART NO. CODIGO Nº	REF. NO.	PART NO. CODIGO Nº	REF. NO.
98780–05015	3 – 9										
98980–03006	6 – 23										
99080–05600	15 – 33										
	15 – 40										