YAMAHA

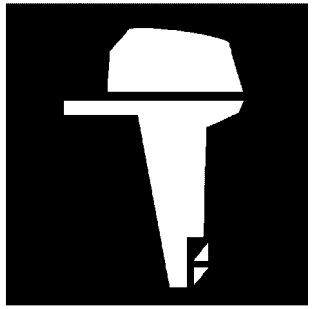

PARTS CATALOGUE
CATALOGO DE REPUESTOS

E60H'20 (69DL)

YAMAHA GENUINE Parts & Accessories

1U69D-200SA

( )

E60H
PARTS CATALOGUE
©2020 by Yamaha Motor Co., Ltd.
1st edition, July 2020
All rights reserved.
Any reprinting or unauthorized use
without the written permission of
Yamaha Motor Co., Ltd.
is expressly prohibited.
Printed in Japan.

E60H
CATALOGO DE REPUESTOS
©2020 por Yamaha Motor Co., Ltd.
1ª edición, julio 2020
Todos los derechos reservados.
Toda reproducción o uso no autorizado
sin el consentimiento escrito de
Yamaha Motor Co., Ltd.
quedan expresamente prohibidos
Impreso en Japón.

FOREWORD

This Parts Catalogue is related to the parts for the model(s) on the cover page. When you are ordering replacement parts, please refer to this Parts Catalogue and quote both part numbers and part names correctly.

1. Modifications or additions which have been made after the issue of the Parts Catalogue will be announced in the Parts News.
   It is advisable that you make the necessary corrections to the Parts Catalogue according to the Parts News.

2. Abbreviations
   The following abbreviations are used in this Parts Catalogue.
   "UR" Use specified parts number.
   "UN" Use as many as needed.
   "AP" Alternate Parts
   "LM" Locally Made (Parts need to be ordered locally)
   "F#" Frame No. (Applicable machine No.)
   "O/S" Over Size

3. The number of components for assembly
   - Parts, which are to be supplied in an assembly, are listed with a dot (.) in front of the part name as shown below.
   - The numeral appearing to the right of each component part indicates the quantity of parts for each assembly unit.

PART NO.	DESCRIPTION	Q'TY	REMARKS
2F5–83310–60	FRONT FLASHER LIGHT ASSY	2	
115–83311–60	.BULB (6V–18W)	1	

4. Applicable colours of graphics are represented in the "REMARKS" as shown below.

PART NO.	DESCRIPTION	Q'TY	REMARKS
2N4–24110–00–X5	FUEL TANK COMP.	2	MXR
3J1–24240–10	.GRAPHIC, FUEL TANK	1	FOR MXR

5. Note that the illustrations for reference in finding parts numbers are not to be used for assembling. When assembling, please use the applicable service manual.

6. The asterisk (*) before a reference number indicates modified items after the first edition.

7. Applicable Serial No.
   Engine Serial No.

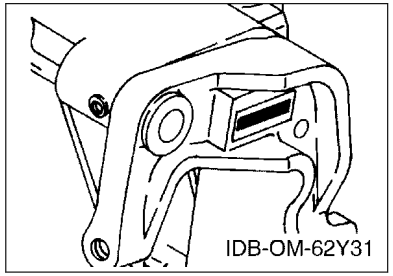

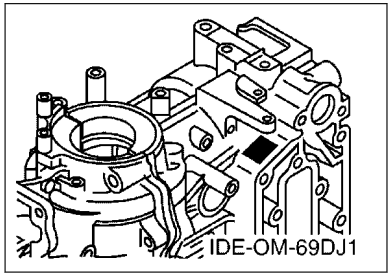

8. Applicable Engine Starting Serial No.

Model	Serial No.	Model	Serial No.
E60H	6K5K-1074070		

9. Applicable Colour Code

Abbreviation	Colour Name	Colour Code
DBN1	DARK BLUISH GRAY 1	008D

10. Quantity Column Information

Column No.	Name Of Q'ty Column	Applicable Model
1	MHD	E60HMHD
2	WHD	E60HWHD
3	WD	E60HWD

PROLOGO

Este catálogo de repuestos corresponde a las piezas para el o los modelos que figuran en la página de portada. Al formular el pedido de repuestos, se ruega citar este catálogo y especificar correctamente el número y el nombre de las piezas.

1. Las modificaciones y agregados que se hayan realizado después de la edición de este Catálogo de Repuestos, serán anunciados en las Informaciones de Recambios.
   Es recomendable que se hagan las correcciones necesarias en el Catálogo de Repuestos de acuerdo con las Informaciones de Recambios.

2. Abreviaciones
   En este. Catálogo de Repuestos se emplean las siguientes abreviaciones.
   "UR" Usar el número de partes especificado
   "UN" Usar la cantidad necesaria
   "AP" Piezas sustitutivas
   "LM" Fabricación local (Hay que pedir los repuestos en las cercanías)
   "F#" Nº de bastidor (Nº aplicable a la máquina)
   "O/S" Sobredimensionado

3. La cantidad de componentes para el montaje
   - Los componentes, suministrados como conjunto, se describen con un punto (.) que precede al nombre del parte como se indica a continuación.
   - La numeración que aparece a la derecha de cada descripción indica la cantidad de partes por cada unidad de conjunto.

CODIGO Nº	DESCRIPCION	CANT.	OBSERVACIONES
2F5–83310–60	ENSAMBLAJE DE LA LUZ	2	
115–83311–60	.BOMBILLA (6V–18W)	1	

4. Los colores de los componentes se indican como sigue en la columna de "OBSERVACIONES".

CODIGO Nº	DESCRIPCION	CANT.	OBSERVACIONES
2N4–24110–00–X5	COMP. DEL TANQUE	2	MXR
3J1–24240–10	.GRAFICO, DEL TANQUE	1	PARA MXR

5. Debe tenerse en cuenta que las ilustraciones sirven como guia para la búsqueda de los números de partes y no deben usarse para el montaje. Durante el montaje, se recomienda usar el manual de taller correspondiente.

6. EL asterisco (*) antes del número de referencia indica los elementos modificados después de la primera edición.

7. Números de serie
   Nº de Serie del motor

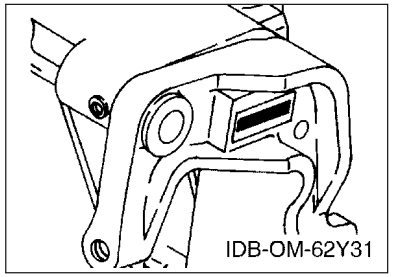

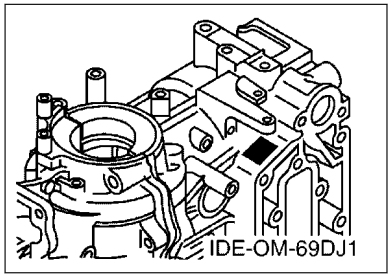

8. Números de serie del motor

Modelo	Nº de serie	Modelo	Nº de serie
E60H	6K5K-1074070		

9. Códigos de color aplicables

Abreviatura	Nombre de color	Código de color
DBN1	DARK BLUISH GRAY 1	008D

10. Informacion para la columna de cantidades

Columna Nº	Nombre de la columna de cantidades	Modelo aplicable
1	MHD	E60HMHD
2	WHD	E60HWHD
3	WD	E60HWD

CONTENTS

SCHEDULED SERVICE PARTS.....1
TOP COWLING.....2
CYLINDER & CRANKCASE.....3
CRANKSHAFT & PISTON.....5
INTAKE.....7
CARBURETOR.....8
FUEL.....10
STARTER.....12
GENERATOR.....15
ELECTRICAL 1.....16
ELECTRICAL 2.....18
ELECTRICAL 3.....19
ELECTRICAL 4.....20
ELECTRICAL 5.....21
STARTING MOTOR.....22
BOTTOM COWLING.....23
STEERING.....25
CONTROL.....28
BRACKET 1.....30
BRACKET 2.....33
BRACKET 3.....34
BRACKET 4.....36
UPPER CASING.....38
LOWER CASING & DRIVE 1.....40
LOWER CASING & DRIVE 2.....44
LOWER CASING & DRIVE 3.....47
FUEL TANK 1.....49
FUEL TANK 2.....50
STEERING GUIDE.....51
REMOTE CONTROL BOX.....52
REMOTE CONTROL ASSY.....53
METER.....56
REPAIR KIT 1.....57
REPAIR KIT 2.....59

INDEX

NUMERICAL INDEX.....60

CONTENIDO

PARTES DE REPUESTO TEMPORALES..... 1
SOPORTE SUPERIOR..... 2
CYLINDRO & CARTER..... 3
CIGUENAL & PISTON.....5
ADMISION.....7
CARBURADOR..... 8
COMBUSTIBLE..... 10
ARRANQUE..... 12
GENERADOR.....15
EQUIPO ELECTRICO 1..... 16
EQUIPO ELECTRICO 2..... 18
EQUIPO ELECTRICO 3..... 19
EQUIPO ELECTRICO 4..... 20
EQUIPO ELECTRICO 5..... 21
MOTOR DE ARRANQUE.....22
CUBIERTA INFERIOR..... 23
DIRECCION.....25
CONTROL..... 28
SOPORTE 1..... 30
SOPORTE 2..... 33
SOPORTE 3..... 34
SOPORTE 4..... 36
FUNDA SUPERIOR.....38
IMPULSOR E INFERIOR 1..... 40
IMPULSOR E INFERIOR 2..... 44
IMPULSOR E INFERIOR 3..... 47
DEPOSITO DE COMBUSTIBLE 1..... 49
DEPOSITO DE COMBUSTIBLE 2..... 50
DIRECCIONGUIAR..... 51
CONTROL REMOTO COMPLETO..... 52
CONTROL REMOTO COMPL.....53
MEDIDOR.....56
ESTUCHE REPARATION 1..... 57
ESTUCHE REPARATION 2..... 59

INDICE

INDICE NUMERICO..... 60

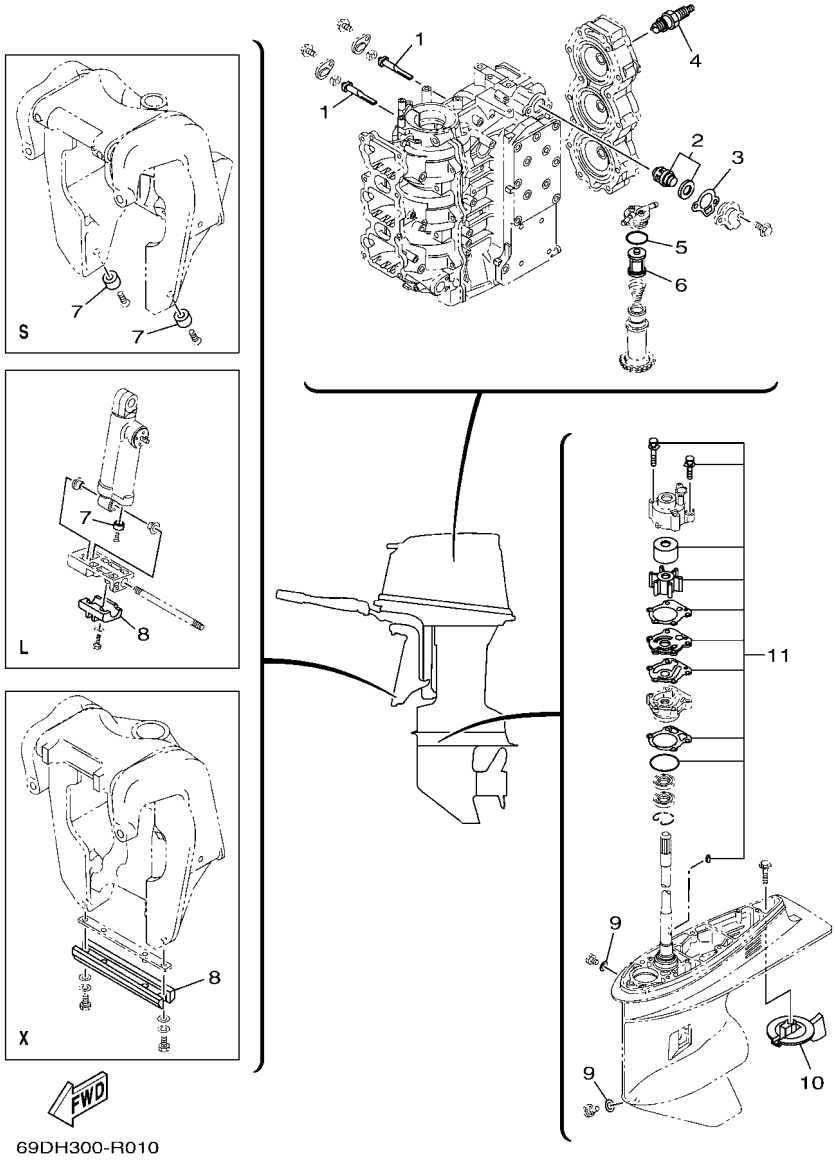

FIG. 1 SCHEDULED SERVICE PARTS — PARTES DE REPUESTO TEMPORALES

REF. NO.	PART NO. CODIGO Nº	DESCRIPTION DESCRIPCION	MHD	WHD	WD			REMARKS OBSERVACIONES
1	6H3–11325–01	ANODE ANODO	2	2	2			
2	6H3–12411–11	THERMOSTAT TERMOSTAT	1	1	1			
3	6H3–12414–A1	GASKET, COVER EMPAQUE	1	1	1			
4	94702–00160	PLUG, SPARK (NGK B8HS-10) BUJIA (NGK B8HS-10)	3	3	3			UR UR
	94702–00247	PLUG, SPARK (NGK BR8HS-10) BUJIA (NGK BR8HS-10)	3	3	3			UR CAR,CHN,TWN UR CAR,CHN,TWN
5	61A–24564–00	O-RING ANILLO O	1	1	1			
6	61A–24563–00	ELEMENT, FILTER ELEMENTO DEL FILTRO	1	1	1			
7	663–45251–00	ANODE CATODE	1	1	1			UN UN
8	63D–45251–01	ANODE CATODE	1	1	1			UR X(25.5") UR X(25.5")
	6H1–45251–03	ANODE CATODE	1	1	1			UR L(22.5") UR L(22.5")
9	90430–08003	GASKET JUNTA	2	2	2			
10	67F–45371–00	TAB-TRIM QUILLA ESTABILIZADOR	1	1	1			
11	69D–W0078–00	WATER PUMP REPAIR KIT ESTUCHE REPARACION BOMBA AGUA	1	1	1			

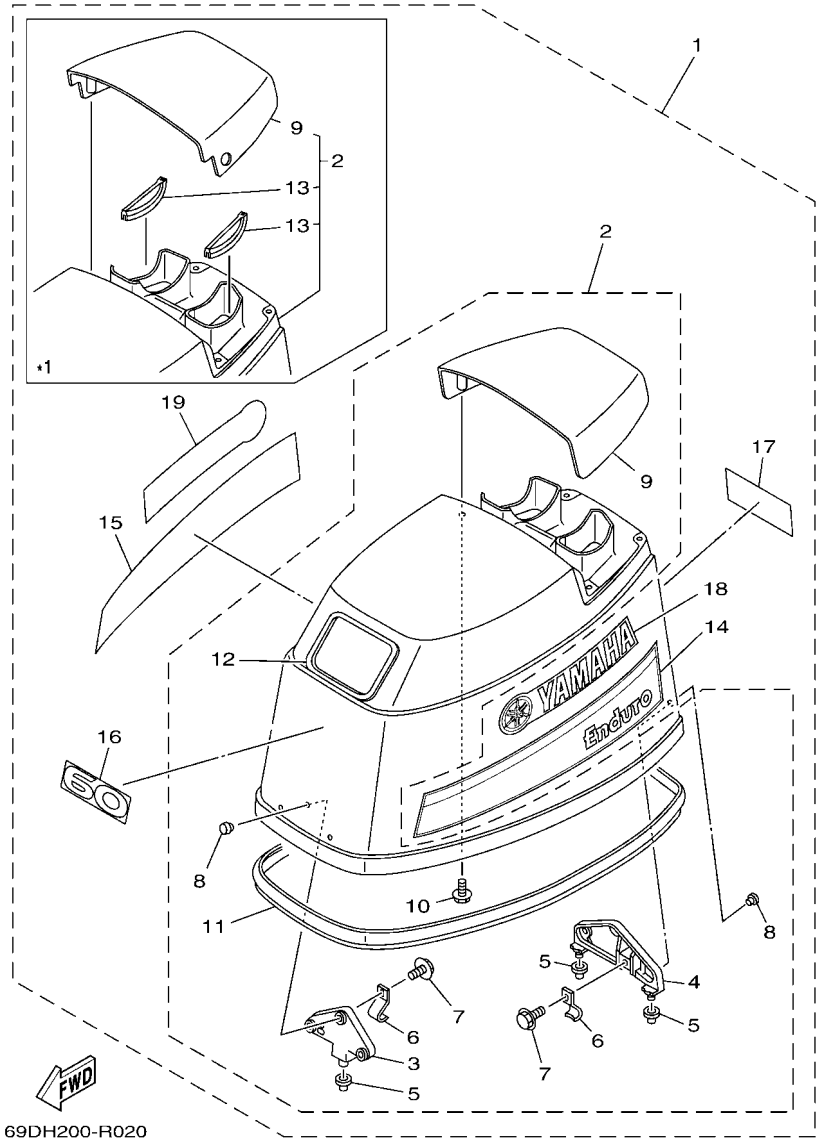

*1: EXCEPT FOR OMN,CHN,KOR,TWN,BRN,OTH

FIG. 2 TOP COWLING — SOPORTE SUPERIOR

REF. NO.	PART NO. CODIGO Nº	DESCRIPTION DESCRIPCION	MHD	WHD	WD			REMARKS OBSERVACIONES
1	69D–42610–11	TOP COWLING ASSY SOPORTE SUPERIOR COMPL.	1	1	1			
	69D–42610–21	TOP COWLING ASSY SOPORTE SUPERIOR COMPL.		1				*1 *1
2	6K5–4261A–01	.TOP COWLING W/O GRAPHICS .SOPORTE SUPERIOR SIN GRAFICOS	1	1	1			
	6K5–4261A–11	.TOP COWLING W/O GRAPHICS .SOPORTE SUPERIOR SIN GRAFICOS		1				*1 *1
3	6H3–42647–00	..HOLDER, CLAMP BAND ..MORDAZA DE ABRAZADERA	1	1	1			
4	6H3–42649–00	..HOLDER, CLAMP BAND ..MORDAZA DE ABRAZADERA	1	1	1			
5	663–42662–00	..DAMPER ..AMORTIGUADOR	3	3	3			
6	6H3–42652–00	..HOOK ..GANCHO	2	2	2			
7	97E95–06616	..BOLT, HEXAGON W/W DEEP RECESS ..TORNILLO HEXAGONAL CON RONDONA	2	2	2			
8	90266–06009	..RIVET ..REMACHE	6	6	6			
9	6H3–42613–01–8D	..MOLDING, AIR DUCT ..MOLDURA CONDUCTO AIRE	1	1	1			
	69D–42620–00–8D	..AIR DUCT ASSY ..DUCTO DE AIRE COMPL.		1				*1 *1
10	97E95–06516	..BOLT, HEXAGON W/W DEEP RECESS ..TORNILLO HEXAGONAL CON RONDONA	4	4	4			
11	6H3–42615–00	..SEAL ..SELLO	1	1	1			
12	6K5–15761–00	..SEAL, RUBBER 1 ..SELLO DE GOMA 1	1	1	1			
13	69D–42616–00	..GROMMET, TOP COWLING ..TAPON DE SOPORTE SUPERIOR COMP		2				*1 *1
14	696–42675–40	.GRAPHIC, SIDE 1 .CALCAMONIA LATERAL 1	1	1	1			
15	696–42676–40	.GRAPHIC, SIDE 2 .CALCAMONIA LATERAL 2	1	1	1			
16	6H2–42678–10	.GRAPHIC, REAR .CALCAMONIA TRASERA	1	1	1			
17	6H2–42678–10	.GRAPHIC, REAR .CALCAMONIA TRASERA	1	1	1			
18	63D–42681–40	.MARK, COWLING .MARCA DE CUBIERTA	1	1	1			
19	63D–42681–40	.MARK, COWLING .MARCA DE CUBIERTA	1	1	1			

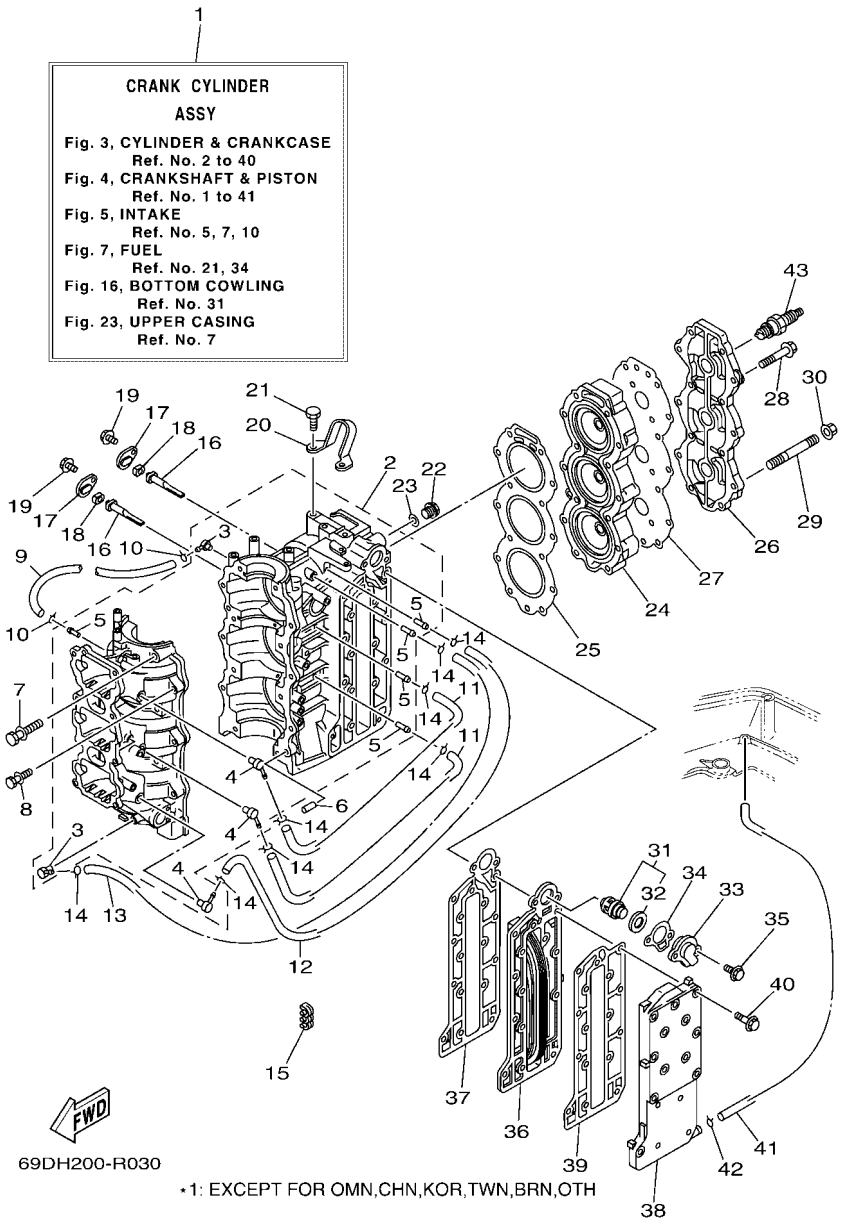

FIG. 3 CYLINDER & CRANKCASE — CYLINDRO & CARTER

REF. NO.	PART NO. CODIGO Nº	DESCRIPTION DESCRIPCION	MHD	WHD	WD			REMARKS OBSERVACIONES
1	69D–W0090–02–1S	CRANK CYLINDER ASSY BLOQUE MOTOR COMPLETO	1	1	1			
2	69D–15100–00	CRANKCASE ASSY CARTER COMPLETO	1	1	1			
3	688–11370–01	.CHECK VALVE ASSY .VALVULA DE CONTROL COMPL.	2	2	2			
4	650–11370–01	.CHECK VALVE ASSY .VALVULA DE CONTROL COMPL.	3	3	3			
5	624–14485–00	.PIPE, JOINT .TUBO DE UNION	5	5	5			
6	93608–12063	PIN, DOWEL PASADOR DE CLAVIJA	2	2	2			
7	90119–10005	BOLT, WITH WASHER TORNILLO CON ARANDELA	8	8	8			
8	90119–08M64	BOLT, WITH WASHER TORNILLO CON ARANDELA	6	6	6			
9	90445–07M44	HOSE (L250) TUBO (L250)	1	1	1			
10	90467–06016	CLIP PRESILLA	2	2	2			
11	90445–07M02	HOSE (L167) TUBO (L167)	2	2	2			
12	90445–07M45	HOSE (L340) TUBO (L340)	1	1	1			
13	90445–07M82	HOSE (L440) TUBO (L440)	1	1	1			
14	90467–06016	CLIP PRESILLA	8	8	8			
15	90464–07M05	CLAMP BRIDA	1	1	1			
16	6H3–11325–01	ANODE ANODO	2	2	2			
17	6H3–11327–00–94	COVER, ANODE CUBIERTA DE ANODO	2	2	2			
18	6H3–11328–00	GROMMET, ANODE TAPON	2	2	2			
19	90119–06023	BOLT, WITH WASHER TORNILLO CON ARANDELA	2	2	2			
20	6K5–11119–01	HANGER, ENGINE SOPORTE DEL MOTOR	1	1	1			
21	90101–08002	BOLT TORNILLO	2	2	2			
22	90340–14M06	PLUG, STRAIGHT SCREW TORNILLO, DE DRENAJE	1	1	1			
23	90430–14115	GASKET JUNTA	1	1	1			
24	6H3–11111–01–1S	HEAD, CYLINDER 1 CULATA CILINDRO 1	1	1	1			
25	6H3–11181–A2	GASKET, CYLINDER HEAD 1 JUNTA, DE CULATA 1	1	1	1			
26	6H3–11191–00–1S	COVER, CYLINDER HEAD 1 TAPA CULATA DE CILINDRO 1	1	1	1			
27	6H3–11193–A1	GASKET, HEAD COVER 1 EMPAQUE	1	1	1			

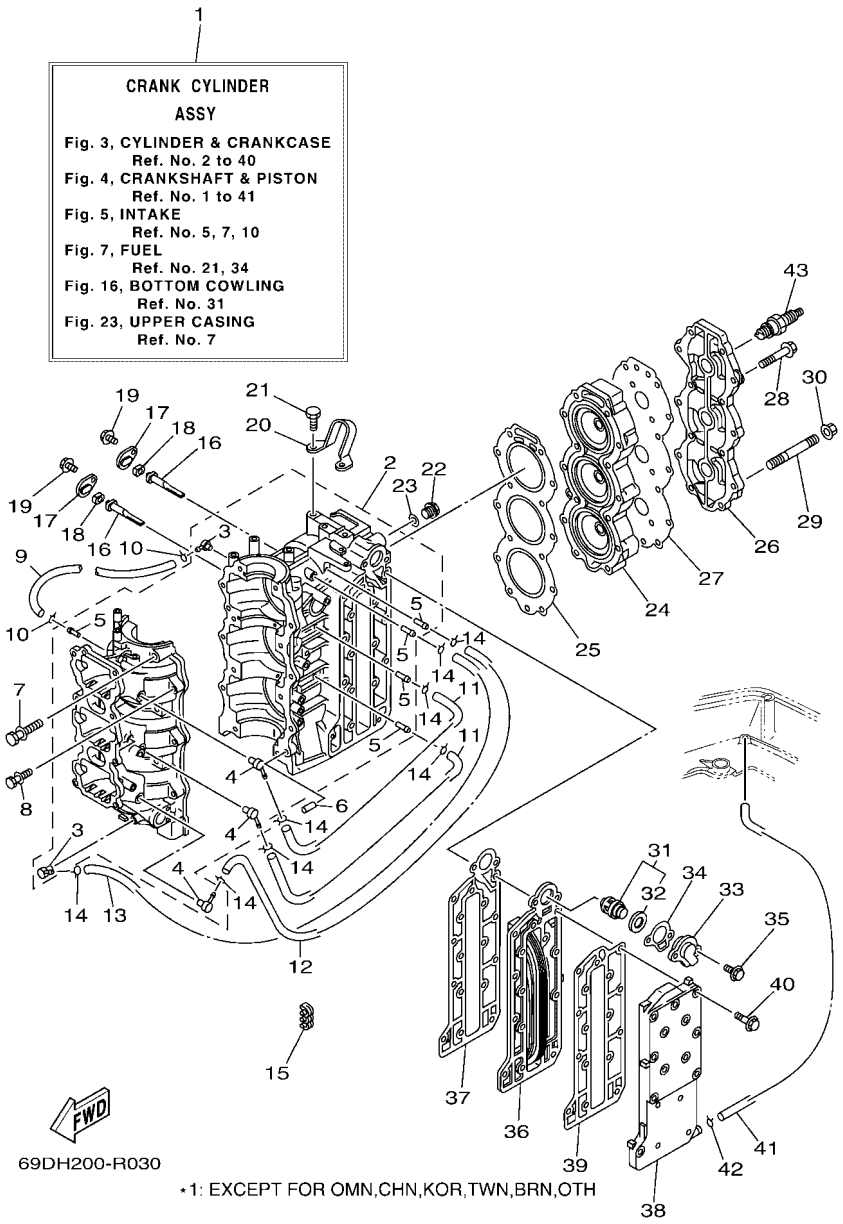

*1: EXCEPT FOR OMN,CHN,KOR,TWN,BRN,OTH

FIG. 3 CYLINDER & CRANKCASE — CYLINDRO & CARTER

REF. NO.	PART NO. CODIGO Nº	DESCRIPTION DESCRIPCION	MHD	WHD	WD			REMARKS OBSERVACIONES
28	90119–08MA5	BOLT, WITH WASHER TORNILLO CON ARANDELA	13	13	13			
29	90116–08M69	BOLT, STUD ESPARRAGO	1	1	1			
30	90179–08M34	NUT TUERCA	1	1	1			
31	6H3–12411–11	THERMOSTAT TERMOSTAT	1	1	1			
32	688–12412–00	.SEAL, THERMOSTAT .SELLO TERMOSTATO	1	1	1			
33	6H3–12413–00–1S	COVER, THERMOSTAT CUBIERTA TERMOSTATO	1	1	1			
34	6H3–12414–A1	GASKET, COVER EMPAQUE	1	1	1			
35	90119–06MA3	BOLT, WITH WASHER TORNILLO CON ARANDELA	2	2	2			
36	6H3–41111–01–1S	INNER COVER, EXHAUST CUBIERTA INTERIOR DE ESCAPE	1	1	1			
37	6H3–41112–A0	GASKET, EXHAUST INNER COVER EMPAQUE	1	1	1			
38	6H3–41113–02–1S	OUTER COVER, EXHAUST CUBOERTA EXTERIOR DE ESCAPE	1	1	1			
39	6H3–41114–A0	GASKET, EXHAUST OUTER COVER EMPAQUE	1	1	1			
40	90119–06MA5	BOLT, WITH WASHER TORNILLO CON ARANDELA	16	16	16			
	90119–06MA5	BOLT, WITH WASHER TORNILLO CON ARANDELA		14				*1 *1
41	663–24312–01	PIPE 2 TUBO 2	1	1	1			
42	90467–08004	CLIP PRESILLA	1	1	1			
43	94702–00160	PLUG, SPARK (NGK B8HS-10) BUJIA (NGK B8HS-10)	3	3	3			
	94702–00247	PLUG, SPARK (NGK BR8HS-10) BUJIA (NGK BR8HS-10)	3	3	3			FOR CAR,CHN,TWN FOR CAR,CHN,TWN

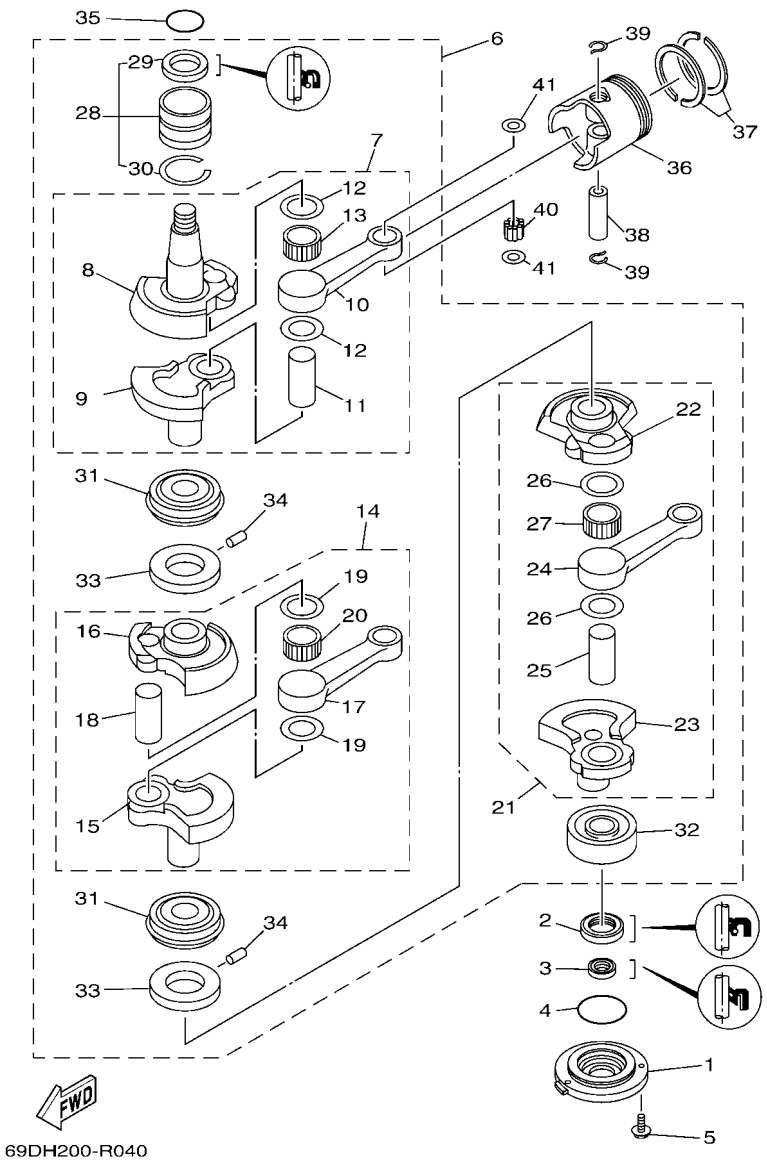

FIG. 4 CRANKSHAFT & PISTON — CIGUENAL & PISTON

REF. NO.	PART NO. CODIGO Nº	DESCRIPTION DESCRIPCION	MHD	WHD	WD			REMARKS OBSERVACIONES
1	6H3–15359–00–94	HOUSING, OIL SEAL CAJA DE SELLO DE ACEITE	1	1	1			
2	93102–30009	OIL SEAL SELLO ACEITE	1	1	1			
3	93106–18001	OIL SEAL SELLO ACEITE	1	1	1			
4	93210–65M50	O-RING ANILLO O	1	1	1			
5	97E95–06520	BOLT, HEXAGON W/W DEEP RECESS TORNILLO HEXAGONAL CON RONDONA	3	3	3			
6	69D–W1140–01	CRANKSHAFT ASSY CIGUENAL COMPLETO	1	1	1			
7	6K5–11401–00	.CRANK SUB ASSY 1 .MANIVELA SEMI-ARMADA 1	1	1	1			
8	6K5–11412–00	..CRANK 1 ..MANIVELA 1	1	1	1			
9	6K5–11422–00	..CRANK 2 ..MANIVELA 2	1	1	1			
10	6K5–11651–00	..ROD, CONNECTING ..BIELA	1	1	1			
11	6K5–11681–00	..PIN, CRANK 1 ..PASADOR MANIVELA 1	1	1	1			
12	90209–27011	..WASHER ..ARANDELA DE SEPARACION	2	2	2			
13	93310–527W1	..BEARING ..COJINETE DE RODILLOS	1	1	1			
14	6K5–11402–00	.CRANK SUB ASSY 2 .MANIVELA SEMI-ARMADA 2	1	1	1			
15	6K5–11422–00	..CRANK 2 ..MANIVELA 2	1	1	1			
16	6H3–11432–00	..CRANK 3 ..MANIVELA 3	1	1	1			
17	6K5–11651–00	..ROD, CONNECTING ..BIELA	1	1	1			
18	6K5–11681–00	..PIN, CRANK 1 ..PASADOR MANIVELA 1	1	1	1			
19	90209–27011	..WASHER ..ARANDELA DE SEPARACION	2	2	2			
20	93310–527W1	..BEARING ..COJINETE DE RODILLOS	1	1	1			
21	6K5–11403–00	.CRANK SUB ASSY 3 .CONJUNTO SUBMANIVELA 3	1	1	1			
22	6H3–11432–01	..CRANK 3 ..MANIVELA 3	1	1	1			
23	6K5–11442–01	..CRANK 4 ..MANIVELA 4	1	1	1			
24	6K5–11651–00	..ROD, CONNECTING ..BIELA	1	1	1			
25	6K5–11681–00	..PIN, CRANK 1 ..PASADOR MANIVELA 1	1	1	1			
26	90209–27011	..WASHER ..ARANDELA DE SEPARACION	2	2	2			
27	93310–527W1	..BEARING ..COJINETE DE RODILLOS	1	1	1			

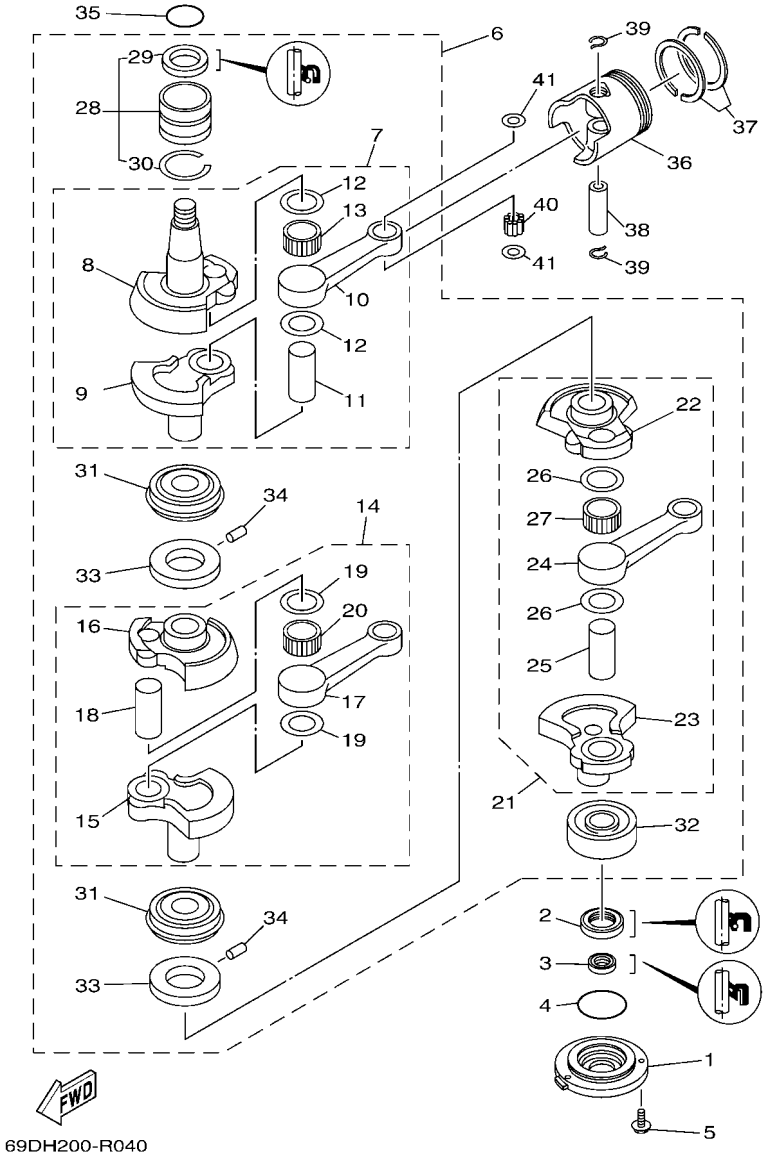

FIG. 4 CRANKSHAFT & PISTON — CIGUENAL & PISTON

REF. NO.	PART NO. CODIGO Nº	DESCRIPTION DESCRIPCION	MHD	WHD	WD			REMARKS OBSERVACIONES
28	93311–636U6	.BEARING .COJINETE DE RODILLOS	1	1	1			
29	93102–36M24	..OIL SEAL ..SELLO ACEITE	1	1	1			
30	93440–49M04	..CIRCLIP ..SEGURO	1	1	1			
31	93332–000UE	.BEARING .COJINETE	2	2	2			
32	93306–306V1	.BEARING .COJINETE	1	1	1			
33	6H3–11515–00	.SEAL, LABYRINTH 1 .SELLO LABERINTO 1	2	2	2			
34	90254–03002	.PIN, SPRING .PASADOR DE TIPO A RESORTE	2	2	2			
35	93210–46M16	O-RING ANILLO O	1	1	1			
36	6K5–11631–03–95	PISTON (STD) PISTON (NORMA)	3	3	3			
	6K5–11635–03	PISTON (0.25MM O/S) PISTON (0.25MM O/S)	3	3	3			AP AP
	6K5–11636–03	PISTON (0.50MM O/S) PISTON (0.50MM O/S)	3	3	3			AP AP
37	6K5–11601–02	PISTON RING SET (STD) JUEGO DE AROS (NORMA)	3	3	3			
	6K5–11601–12	PISTON RING SET (0.25MM O/S) JUEGO DE AROS (0.25MM O/S)	3	3	3			AP AP
	6K5–11601–22	PISTON RING SET (0.50MM O/S) JUEGO DE AROS (0.50MM O/S)	3	3	3			AP AP
38	6H3–11633–00	PIN, PISTON PASADOR, PISTON	3	3	3			
39	688–11634–10	CLIP, PISTON PIN PRESILLA, BULON DE PISTON	6	6	6			
40	93603–18M09	PIN, DOWEL PASADOR DE CLAVIJA	84	84	84			
41	90201–20417	WASHER, PLATE ARANDELA PLANA	6	6	6			

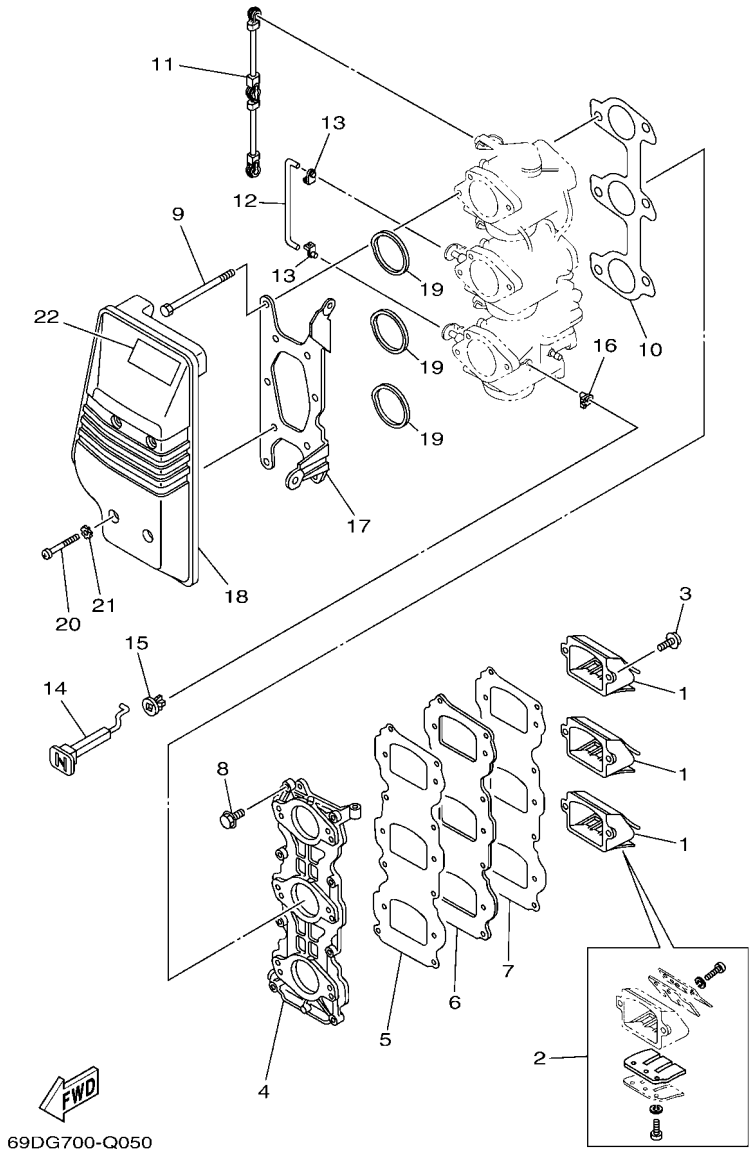

FIG. 5 INTAKE — ADMISION

REF. NO.	PART NO. CODIGO Nº	DESCRIPTION DESCRIPCION	MHD	WHD	WD			REMARKS OBSERVACIONES
1	6H2–13610–00	REED VALVE ASSY VALVULA DE LAMINAS COMPLETA	3	3	3			
2	688–W0004–00	.REED SET .JUEGO DE VALVULAS DE LENGUETA	1	1	1			
3	97980–05216	SCREW, WITH WASHER TORNILLO, CON ARANDELA	6	6	6			
4	6H3–13641–04	MANIFOLD, INTAKE 1 CONECTOR DE ADMISSION 1	1	1	1			
5	6H3–13621–A1	GASKET, VALVE SEAT JUNTA, DE VALV.DE EMPAQUE	1	1	1			
6	6H3–13624–00	PLATE,REED VALVE PLACA DE VALVULA DE LAMINAS	1	1	1			
7	6H3–13622–A1	GASKET, VALVE SEAT EMPAQUE DE ASIENTO VALVULA	1	1	1			
8	90119–06MA3	BOLT, WITH WASHER TORNILLO CON ARANDELA	8	8	8			
9	97D95–06095	BOLT, HEXAGON DEEP RECESS TORNILLO HEXAGONAL	6	6	6			
10	6H3–14198–A1	GASKET EMPAQUE	1	1	1			
11	6H3–41217–00	ROD, ACCEL. LEVER VARILLA PALANCA ACELERADOR	1	1	1			
12	6H3–41257–00	ROD, CHOKE 2 VARILLA DE AHOGADOR	2	2	2			
13	661–41262–02	JOINT, CHOKE LEVER CONECTOR DE AHOGADOR	4	4	4			
14	6H3–41271–01	KNOB, CHOKE PERILLA AHOGADOR	1	1	1			
15	689–41273–00	GROMMET TAPON PROTECTOR	1	1	1			
16	661–41262–02	JOINT, CHOKE LEVER CONECTOR DE AHOGADOR	1	1	1			
17	6H3–14413–11	STAY SOPORTE	1	1	1			
18	6H3–14440–02	SILENCER ASSY, INTAKE SILENCIADOR COMPL DE ADMISION	1	1	1			
19	6H3–14457–01	SEAL SELLO	3	3	3			
20	97885–06045	SCREW, PAN HEAD TORNILLO A MUESCA	4	4	4			
21	90209–06M05	WASHER ARANDELA DE SEPARACION	4	4	4			
22	6EE–81994–40	LABEL, SAFETY ETIQUETA DE SEGURIDAD	1	1	1			

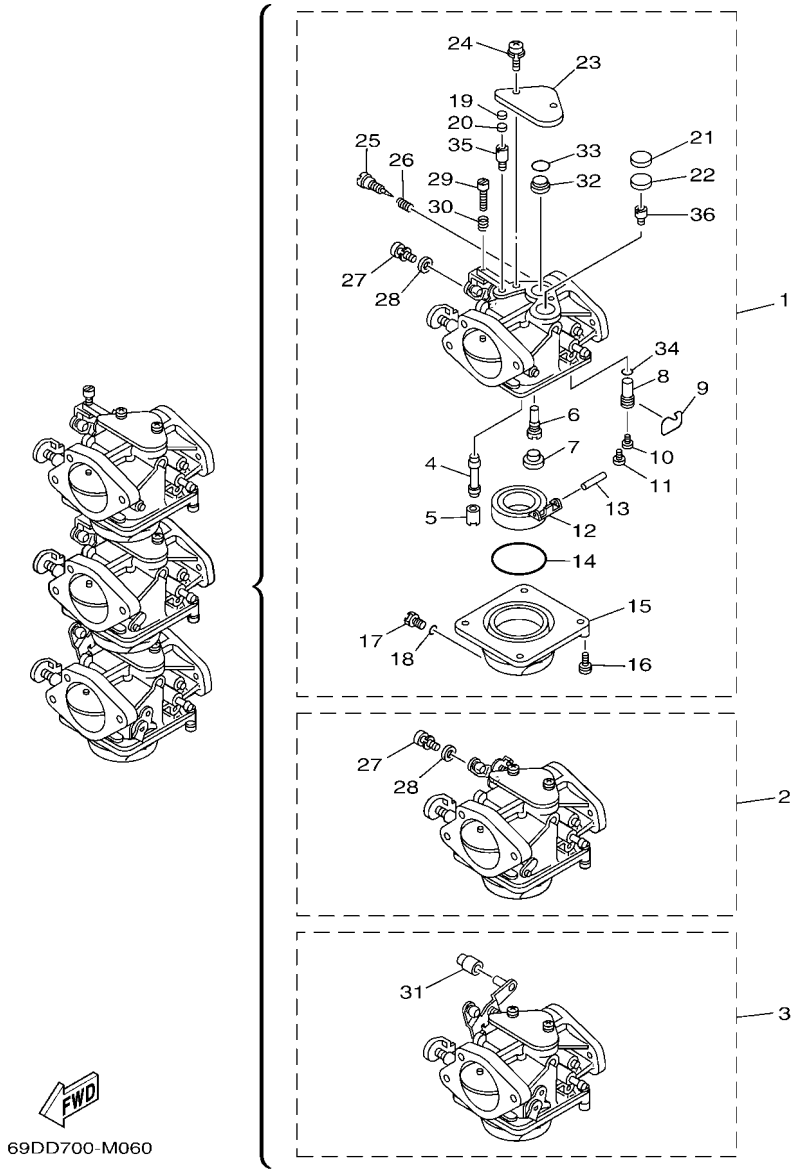

FIG. 6 CARBURETOR — CARBURADOR

REF. NO.	PART NO. CODIGO Nº	DESCRIPTION DESCRIPCION	MHD	WHD	WD			REMARKS OBSERVACIONES
1	6K5–14301–10	CARBURETOR ASSY 1 CARBURADOR COMPLETO 1	1	1	1			
2	6K5–14302–10	CARBURETOR ASSY 2 CARBURADOR COMPLETO 2	1	1	1			
3	6K5–14303–10	CARBURETOR ASSY 3 CARBURADOR COMPLETO 3	1	1	1			
4	6H2–14947–02	.NOZZLE, MAIN .INYECTOR DE AGUJA	3	3	3			
5	676–14943–34	.JET, MAIN (#135) .INYECTOR PRINCIPAL (#135)	3	3	3			
6	6H4–14948–15	.JET, SLOW (#70) .INYECTOR (#70)	3	3	3			
7	676–14966–00	.CAP .TAPA	3	3	3			
8	6H3–14590–01	.NEEDLE VALVE ASSY .VALVULA DE AGUJA COMPLETA	3	3	3			
9	663–14159–00	.CLIP .PRESILLA	3	3	3			
10	676–14186–00	.PIN, FLOAT .PASADOR DE LA BOYA	3	3	3			
11	98580–04008	.SCREW, PAN HEAD .TORNILLO DE CABEZA CRUZADA	3	3	3			
12	6G1–14985–00	.FLOAT .BOIA	3	3	3			
13	688–14548–00	.PIN, FLOAT ARM .PASADOR DE BRAZO DE BOIA	3	3	3			
14	6G1–14984–00	.O-RING .EMPAQUE CAMARA DE BOIA	3	3	3			
15	6H2–14980–00	.BODY, FLOAT CHAMBER .CUERPO CAMARA DE BOIA	3	3	3			
16	97980–04114	.SCREW, WITH WASHER .TORNILLO, CON ARANDELA	12	12	12			
17	6H3–14992–00	.SCREW, DRAIN .TORNILLO,SEGURO	3	3	3			
18	93210–04230	.O-RING .ANILLO O	3	3	3			
19	663–14126–00	.GASKET .EMPAQUE	3	3	3			
20	663–14527–00	.PLATE .PLACA	3	3	3			
21	688–14126–00	.GASKET .EMPAQUE	3	3	3			
22	688–14527–00	.PLATE .PLACA	3	3	3			
23	6H2–14527–01	.PLATE .PLACA	3	3	3			
24	97980–05310	.SCREW, WITH WASHER .TORNILLO, CON ARANDELA	6	6	6			
25	692–14923–00	.SCREW, PILOT .TORNILLO DE AJUSTE	3	3	3			
26	679–14555–00	.SPRING .RESORTE	3	3	3			
27	6K5–14592–00	.SCREW .TORNILLO	2	2	2			#1,2 #1,2

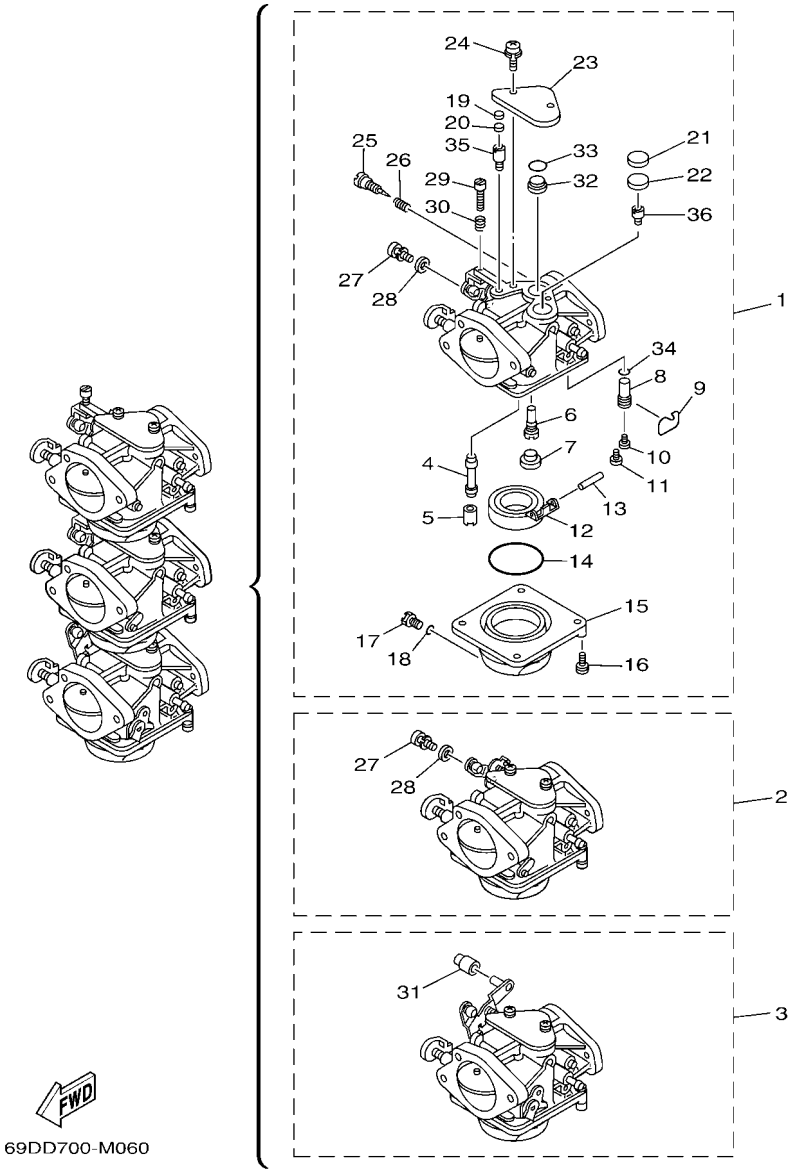

FIG. 6 CARBURETOR — CARBURADOR

REF. NO.	PART NO. CODIGO Nº	DESCRIPTION DESCRIPCION	MHD	WHD	WD			REMARKS OBSERVACIONES
28	90201–05652	.WASHER, PLATE .ARANDELA PLANA	2	2	2			#1,2 #1,2
29	63V–14523–00	.SCREW, STOP .TORNILLO DE TOPE	1	1	1			#1 #1
30	90501–10326	.SPRING, COMPRESSION .RESORTE DE COMPRESION	1	1	1			#1 #1
31	6H2–14578–00	.COLLAR .COLLAR	1	1	1			#3 #3
32	6H3–14578–00	.PLATE .COLLAR	3	3	3			
33	93210–15M52	.O-RING .ANILLO O	3	3	3			
34	93210–04228	.O-RING .ANILLO O	3	3	3			
35	6K5–14945–36	.JET, AIR MAIN (#145) .INYECTOR (#145)	3	3	3			
36	6K5–14950–21	.JET, AIR SLOW (#85) .ESPREA DE AIRE PILOTO (#85)	3	3	3			

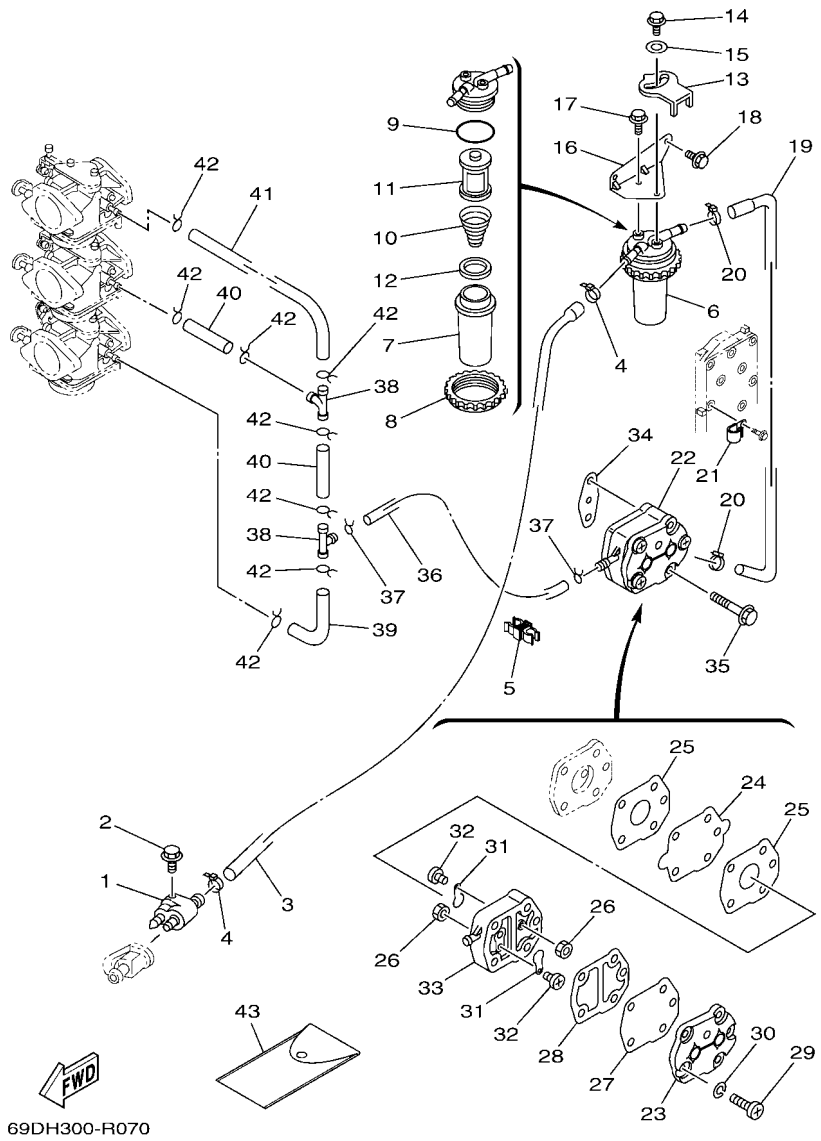

FIG. 7 FUEL — COMBUSTIBLE

REF. NO.	PART NO. CODIGO Nº	DESCRIPTION DESCRIPCION	MHD	WHD	WD			REMARKS OBSERVACIONES
1	6G1–24304–10	FUEL PIPE JOINT COMP. 1 CONECTOR MANGUERA COMBUST.1	1	1	1			
2	97E95–06525	BOLT, HEXAGON W/W DEEP RECESS TORNILLO HEXAGONAL CON RONDONA	1	1	1			
3	69D–24311–00	PIPE, FUEL 1 TUBO DE COMBUSTIBLE 1	1	1	1			
4	90465–11M10	CLAMP BRIDA	2	2	2			
5	90464–10M59	CLAMP BRIDA	1	1	1			
6	61A–24560–04	FILTER ASSY FILTRO COMPLETO	1	1	1			
7	61A–24521–00	.CUP, FILTER .COPA DE FILTRO	1	1	1			
8	65L–24531–01	.NUT .TUERCA	1	1	1			
9	61A–24564–00	.O-RING .ANILLO O	1	1	1			
10	61A–24577–01	.SPRING .RESORTE	1	1	1			
11	61A–24563–00	.ELEMENT, FILTER .ELEMENTO DEL FILTRO	1	1	1			
12	61A–24469–00	.FLOAT, WATER LEVEL .BOIA	1	1	1			
13	60H–24558–00	HOLDER, FILTER SOPORTE DE FILTRO	1	1	1			
14	97E95–06416	BOLT, HEXAGON W/W DEEP RECESS TORNILLO HEXAGONAL CON RONDONA	1	1	1			
15	90201–06068	WASHER, PLATE ARANDELA PLANA	1	1	1			
16	69D–24566–01	BRACKET, FILTER SOPORTE DEL FILTRO	1	1	1			
17	97E95–06514	BOLT, HEXAGON W/W DEEP RECESS TORNILLO HEXAGONAL CON RONDONA	1	1	1			
18	97E95–06516	BOLT, HEXAGON W/W DEEP RECESS TORNILLO HEXAGONAL CON RONDONA	2	2	2			
19	69D–24312–00	PIPE 2 TUBO 2	1	1	1			
20	90465–11M10	CLAMP BRIDA	2	2	2			
21	90465–08M83	CLAMP BRIDA	1	1	1			
22	692–24410–00	FUEL PUMP ASSY BOMBA DE COMBUSTIBLE COMPLETA	1	1	1			
23	6A0–24413–00	.BODY 2 .CUERPO 2	1	1	1			
24	692–24411–00	.DIAPHRAGM .DIAFRAGMA	1	1	1			
25	648–24434–01	.GASKET, BODY .EMPAQUE	2	2	2			
26	95380–03600	.NUT .TUERCA	2	2	2			
27	663–24411–00	.DIAPHRAGM .DIAFRAGMA	1	1	1			

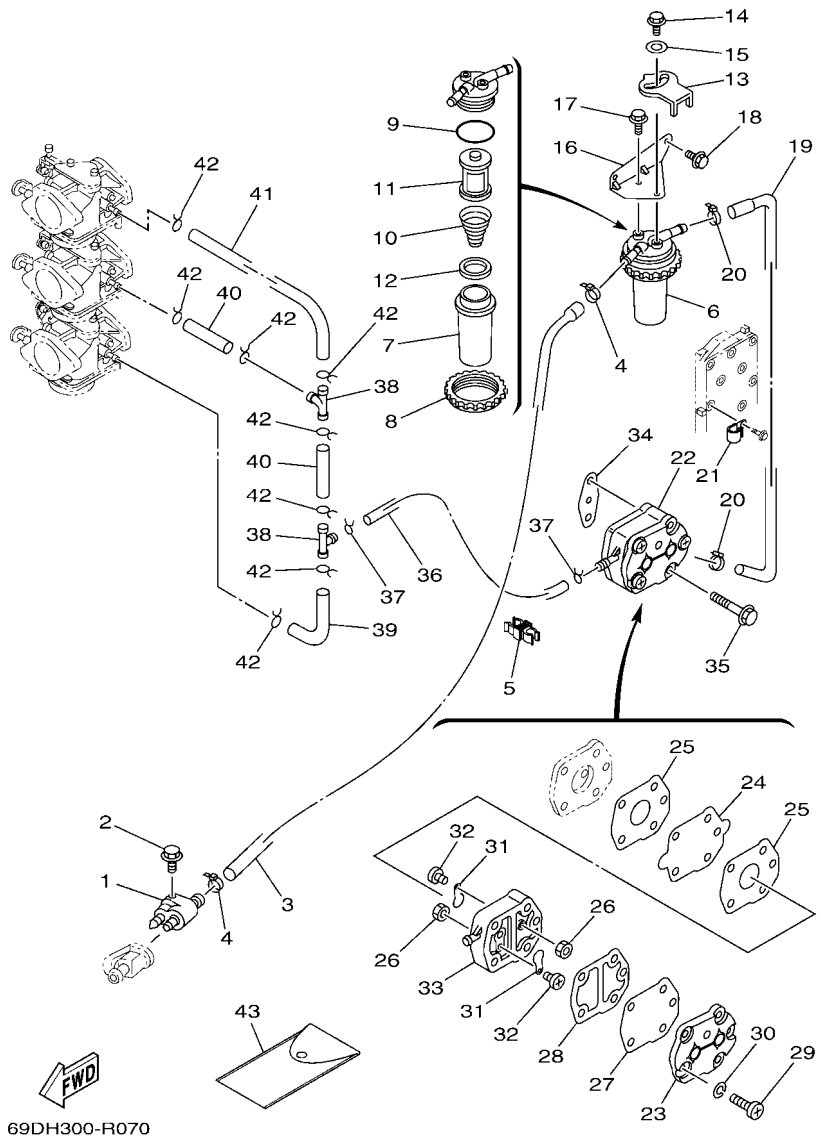

FIG. 7 FUEL — COMBUSTIBLE

REF. NO.	PART NO. CODIGO Nº	DESCRIPTION DESCRIPCION	MHD	WHD	WD			REMARKS OBSERVACIONES
28	648–24435–02	.GASKET, BODY 2 .EMPAQUE	1	1	1			
29	98503–05028	.SCREW, PAN HEAD .TORNILLO DE CABEZA DE CONO ACH	3	3	3			
30	92990–05100	.WASHER, SPRING .ARANDELA PLANA	3	3	3			
31	6A0–24421–01	.VALVE, CHECK .VALVULA DE RETENCION	2	2	2			
32	6A0–14325–00	.SCREW, PAN HEAD .TORNILLO CABEZA REDONDA	2	2	2			
33	6A0–24412–02	.BODY 1 .CUERPO 1	1	1	1			
34	650–24431–A0	GASKET, FUEL PUMP 1 EMPAQUE BOMBA COMBUST 1	1	1	1			
35	97E95–06540	BOLT, HEXAGON W/W DEEP RECESS TORNILLO HEXAGONAL CON RONDONA	2	2	2			
36	90445–09072	HOSE (L120) TUBO (L120)	1	1	1			
37	90467–08004	CLIP PRESILLA	2	2	2			
38	688–24378–00	PIPE, JOINT 3 TUBO DE UNION 3	2	2	2			
39	6H3–24313–00	PIPE 3 TUBO 3	1	1	1			
40	90445–09220	HOSE (L30) TUBO (L30)	2	2	2			
41	6H3–24314–00	PIPE 4 TUBO 4	1	1	1			
42	90467–08004	CLIP PRESILLA	8	8	8			
43	656–W2810–02	TOOL KIT JUEGO DE HERRAMIENTAS	1	1	1			

FIG. 8 STARTER ARRANQUE

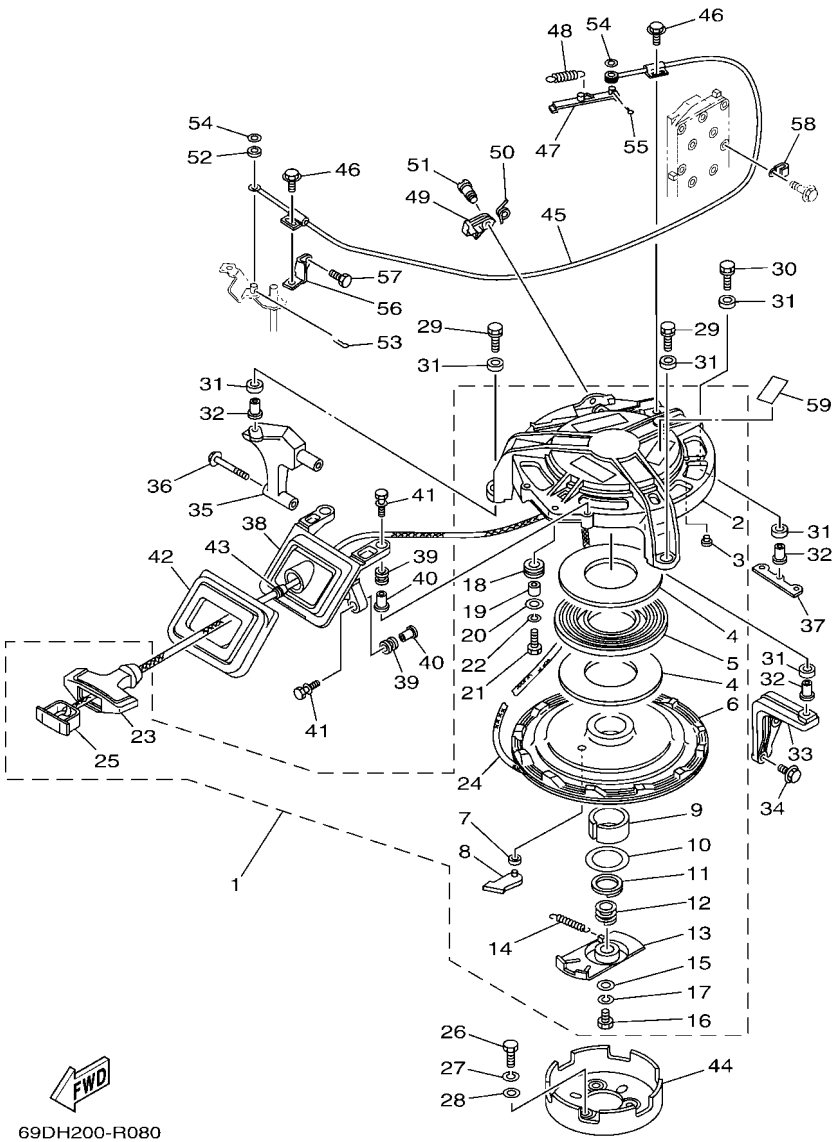

*1:CUT FROM 50M ROLLS,PART NO.90890-44374,CUTTING LENGTH 2.2M

*1:CORTE DE UN RODILLO DE 50M , PARTS NUMERO 90890-44374, LARGO DEL CORTE 2.2M

REF. NO.	PART NO. CODIGO Nº	DESCRIPTION DESCRIPCION	MHD	WHD	WD			REMARKS OBSERVACIONES
1	692–W1571–03	STARTER ASSY ARRANQUE COMPLETO	1	1	1			
2	692–15711–01	.CASE, STARTER .CAJA DE ARRANQUE	1	1	1			
3	648–15773–00	.STAY 3 .SOPORTE 3	5	5	5			
4	663–15739–00	.WASHER, THRUST .ARANDELA DE EMPUJE AXIAL	2	2	2			
5	663–15713–00	.SPRING, STARTER .RESORTE DE ARRANQUE	1	1	1			
6	663–15714–02	.DRUM, SHEAVE .TAMBOR ROLDANA	1	1	1			
7	663–15764–00	.COLLAR 1 .COLLAR 1	1	1	1			
8	663–15741–02	.PAWL, DRIVE .TRINQUETE DE TRACCION	1	1	1			
9	663–15754–00	.BUSH 2 .BUJE 2	1	1	1			
10	663–15726–01	.WASHER, FLAT .ARANDELA PLANA	1	1	1			
11	663–15744–00	.CIRCLIP .SEGURO	1	1	1			
12	663–15715–00	.SPRING, FRICTION .RESORTE PLACA DE TRACCION	1	1	1			
13	696–15716–00	.PLATE, DRIVE .PLACA DE TRACCION	1	1	1			
14	696–15734–00	.SPRING, RETURN .RESORTE DE RETORNO	1	1	1			
15	663–15719–00	.WASHER, THRUST .ARANDELA DE EMPUJE	1	1	1			
16	97095–06016	.BOLT .PERNO	1	1	1			
17	92995–06100	.WASHER, SPRING .ARANDELA	1	1	1			
18	663–15752–00	.ROLLER, WIRE .RODILLO DE CUERDA	1	1	1			
19	6F5–15753–00	.BUSH .BUJE	1	1	1			
20	6F5–15791–00	.WASHER, LOCK .EMBLEMA	1	1	1			
21	97017–06025	.BOLT .PERNO	1	1	1			
22	92995–06100	.WASHER, SPRING .ARANDELA	1	1	1			
23	689–15755–01	.HANDLE, STARTER .MANIJA DE ARRANQUE	1	1	1			
24	*	.WIRE (L:2200MM) .CABLE (L:2200MM)	1	1	1			*1 *1
25	6F5–15779–02	.COVER .CUBIERTA	1	1	1			
26	97013–08012	BOLT PERNO	3	3	3			
27	92903–08100	WASHER, SPRING RONDANA SENCILLA	3	3	3			

FIG. 8 STARTER ARRANQUE

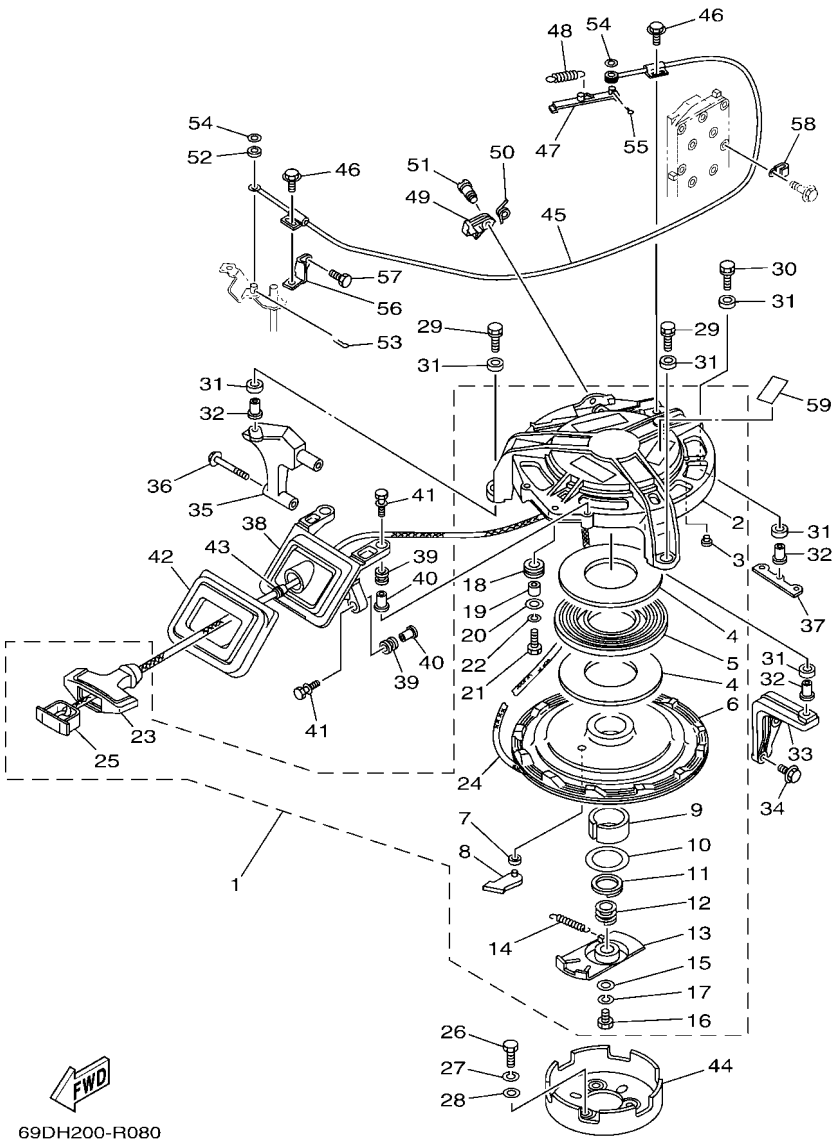

*1:CUT FROM 50M ROLLS,PART NO.90890-44374,CUTTING LENGTH 2.2M

*1:CORTE DE UN RODILLO DE 50M , PARTS NUMERO 90890-44374, LARGO DEL CORTE 2.2M

REF. NO.	PART NO. CODIGO Nº	DESCRIPTION DESCRIPCION	MHD	WHD	WD			REMARKS OBSERVACIONES
28	92903–08600	WASHER, PLATE RONDANA SENCILLA	3	3	3			
29	90119–08087	BOLT, WITH WASHER TORNILLO CON ARANDELA	2	2	2			
30	90119–08180	BOLT, WITH WASHER TORNILLO CON ARANDELA	1	1	1			
31	90385–12M04	BUSH BUJE	6	6	6			
32	90387–08M05	COLLAR ESPACIADOR	3	3	3			
33	6K5–15771–00–94	STAY 1 SOPORTE 1	1	1	1			
34	97513–06525	BOLT, WITH WASHER PERNO CON ARANDELA	2	2	2			
35	6K5–15772–00–94	STAY 2 SOPORTE 2	1	1	1			
36	97513–06555	BOLT, WITH WASHER PERNO CON ARANDELA	2	2	2			
37	6K5–15773–01	STAY 3 SOPORTE 3	1	1	1			
38	6K5–15758–01–94	GUIDE, WIRE GUIA DE CABLE	1	1	1			
39	6A0–82317–00	DAMPER, IGNITION COIL AMORTIGUADOR BOBINA ENCENDIDO	4	4	4			
40	90387–06119	COLLAR ESPACIADOR	4	4	4			
41	90119–06290	BOLT, WITH WASHER TORNILLO CON ARANDELA	4	4	4			
42	6K5–15762–00	SEAL, RUBBER 2 SELLO DE GOMA 2	1	1	1			
43	697–15789–00	DAMPER AMORTIGUADOR	1	1	1			
44	6K5–15723–00	PULLEY, STARTER POLEA DE ARRANQUE	1	1	1			
45	6K5–15770–01	CABLE COMP., STARTER STOP CABLECOMPL DE SEGURO ARRANQUE	1	1	1			
46	97E95–06512	BOLT, HEXAGON W/W DEEP RECESS TORNILLO HEXAGONAL CON RONDONA	2	2	2			
47	663–15735–01	GUIDE, CAM GUIA DE LEVA	1	1	1			
48	90506–08M23	SPRING, TENSION RESORTE DE TENSION	1	1	1			
49	663–15794–00	STOPPER TOPE	1	1	1			
50	90508–12015	SPRING, TORSION RESORTE DE TORSION	1	1	1			
51	90149–05095	SCREW TORNILLO DE REGLAJE	1	1	1			
52	663–15736–00	RING, RETAINING 1 ANILLO DE RETEN	1	1	1			
53	90468–18008	CLIP PRESILLA	1	1	1			
54	92903–06200	WASHER, PLAIN RONDANA SENCILLA	2	2	2			

FIG. 8 STARTER ARRANQUE

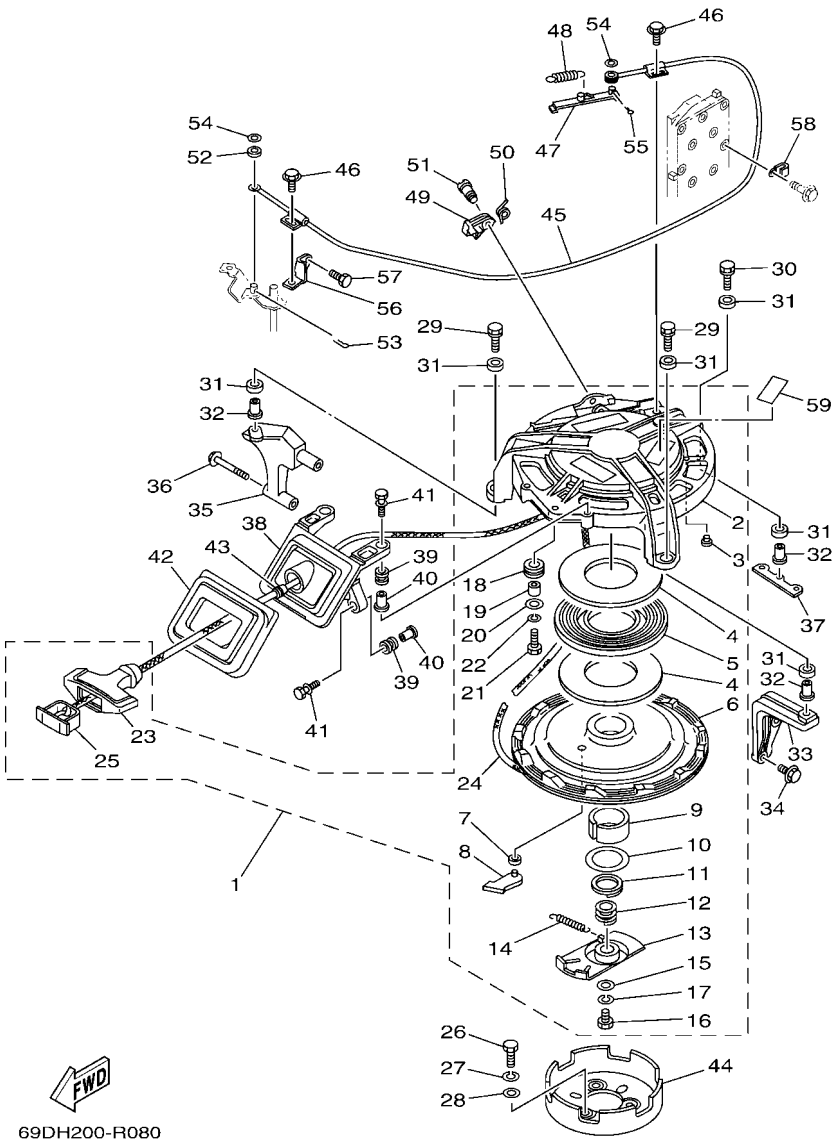

*1:CUT FROM 50M ROLLS,PART NO.90890-44374,CUTTING LENGTH 2.2M

*1:CORTE DE UN RODILLO DE 50M , PARTS NUMERO 90890-44374, LARGO DEL CORTE 2.2M

REF. NO.	PART NO. CODIGO Nº	DESCRIPTION DESCRIPCION	MHD	WHD	WD			REMARKS OBSERVACIONES
55	91490–16012	PIN. COTTER CHAVETA	1	1	1			
56	6K5–15774–00	STAY 4 SOPORTE 4	1	1	1			
57	97013–06012	BOLT PERNO	1	1	1			
58	90465–06M90	CLAMP BRIDA	1	1	1			
59	6EE–81995–40	LABEL, WARNING ETIQUETA DE PRECAUCION	1	1	1			

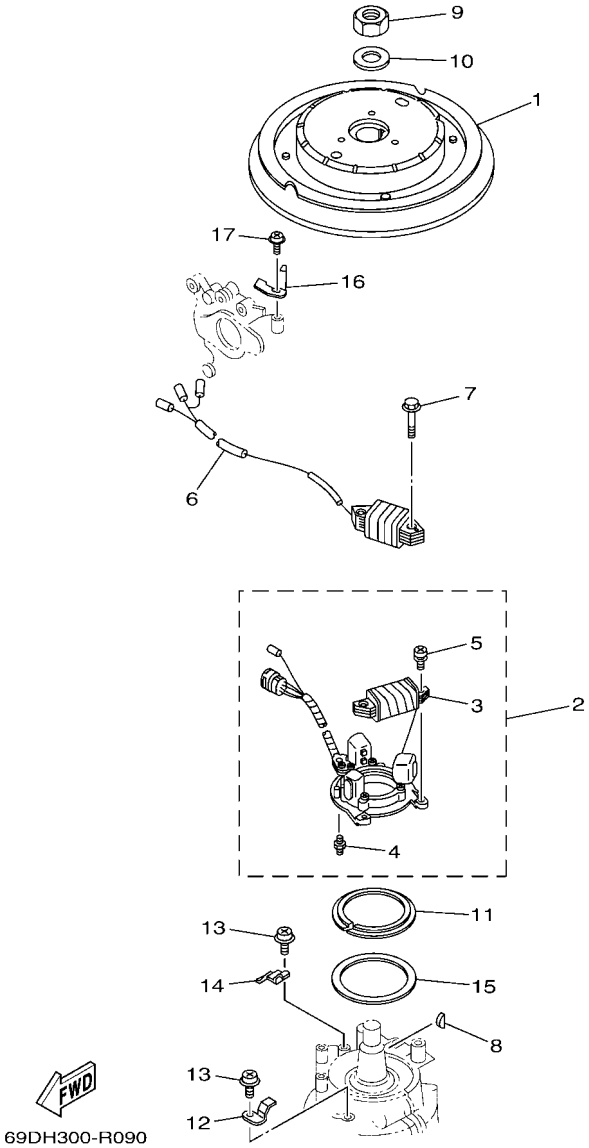

FIG. 9 GENERATOR — GENERADOR

REF. NO.	PART NO. CODIGO Nº	DESCRIPTION DESCRIPCION	MHD	WHD	WD			REMARKS OBSERVACIONES
1	6K5–85550–11	ROTOR ASSY ROTOR COMPLETO	1					
	6K5–85550–A1	ROTOR ASSY ROTOR COMPLETO		1	1			
2	6H3–85510–A1	STATOR ASSY ESTATOR COMPLETO	1	1	1			
3	6H3–85520–00	.COIL, CHARGE .BOBINA DE CARGA	1	1	1			
4	663–85518–00	.JOINT, BALL .CONECTOR	1	1	1			
5	97902–05125	.SCREW, WITH WASHER .TORNILLO, CON ARANDELA	2	2	2			
6	6H3–85533–A0	COIL, LIGHTING BOBINA DE LUZ	1	1	1			
7	97513–06530	BOLT, WITH WASHER PERNO CON ARANDELA	2	2	2			
8	90280–05015	KEY, WOODRUFF CUNA WOODRUFF	1	1	1			
9	90170–20137	NUT TUERCA	1	1	1			
10	90201–21M18	WASHER, PLATE ARANDELA PLANA	1	1	1			
11	6H4–41611–00	RETAINER, MAGNETO BASE RETENEDOR BASE MAGNETO	1	1	1			
12	6H3–41612–00	RETAINER, MAGNETO BASE RETENEDOR BASE MAGNETO	2	2	2			
13	97985–06212	SCREW, WITH WASHER TORNILLO, CON ARANDELA	3	3	3			
14	6H3–41612–10	RETAINER, MAGNETO BASE RETENEDOR BASE MAGNETO	1	1	1			
15	6K5–41618–00	WASHER, MAGNETO RONDANA, MAGNETO	1	1	1			
16	6K5–81332–60	PLATE, TIMING PLACA REGULADOR DE TIEMPO	1					
	6K5–81332–00	PLATE, TIMING PLACA REGULADOR DE TIEMPO		1	1			
17	97985–06210	SCREW, WITH WASHER TORNILLO, CON ARANDELA	1	1	1			

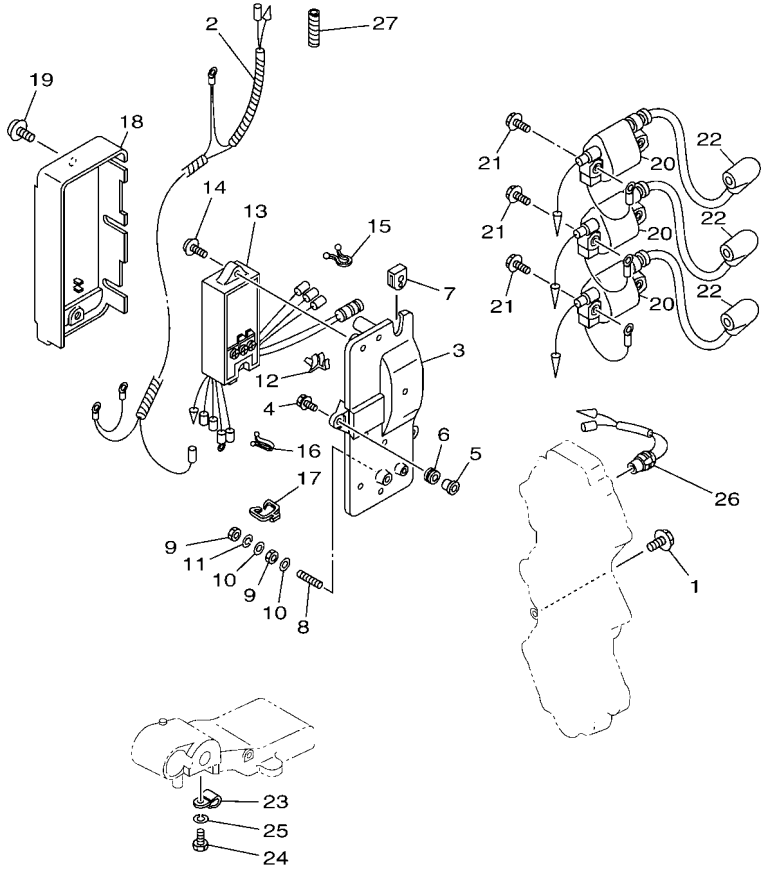

69DL200-U100

*1: EXCEPT FOR OMN,CHN,KOR,TWN,BRN,OTH

FIG. 10 ELECTRICAL 1 — EQUIPO ELECTRICO 1

REF. NO.	PART NO. CODIGO Nº	DESCRIPTION DESCRIPCION	MHD	WHD	WD			REMARKS OBSERVACIONES
1	97513–06512	BOLT, WITH WASHER PERNO CON ARANDELA	1	1				
2	69D–82531–00	WIRE, LEAD CABLE CONDUCTOR	1					
3	6H3–85542–00	BRACKET SOPORTE	1	1	1			
4	90105–06M14	BOLT FLANGE TORNILLO	3	3	3			
5	90387–06M43	COLLAR ESPACIADOR	3	3	3			
6	90480–13M24	GROMMET TAPON	3	3	3			
7	6H3–81922–00	GROMMET TAPON PROTECTOR	1	1	1			
8	90116–06M07	BOLT, STUD ESPARRAGO	1	1	1			
9	95380–06700	NUT TUERCA	2	2	2			
10	92990–06200	WASHER, PLAIN ARANDELA PLANA	2	2	2			
11	92990–06100	WASHER, SPRING ARANDELA PLANA	1	1	1			
12	90464–04M12	CLAMP BRIDA	1	1	1			
13	6H3–85540–12	C.D.I. UNIT ASSY UNIDAD C.D.I. COMPLETA	1	1	1			
14	97980–06225	SCREW, WITH WASHER TORNILLO, CON ARANDELA	2	2	2			
15	90464–08M07	CLAMP BRIDA	1	1	1			
16	90464–12M17	CLAMP BRIDA	1	1	1			
17	90464–07M10	CLAMP BRIDA	1	1	1			
18	6H3–81916–00	COVER, TERMINAL CUBIERTA DE TERMINAL	1	1	1			
19	97985–06212	SCREW, WITH WASHER TORNILLO, CON ARANDELA	2	2	2			
20	6H3–85570–10	IGNITION COIL ASSY BOBINA DE IGNICION COMPLETO	3	3	3			
21	97513–06525	BOLT, WITH WASHER PERNO CON ARANDELA	6	6	6			
22	663–82370–01	PLUG CAP ASSY TAPON DE BUJIA COMPLT	3	3	3			
	6G1–82370–21	PLUG CAP ASSY TAPON DE BUJIA COMPLT	3					FOR CAR FOR CAR
	63M–82370–01	PLUG CAP ASSY TAPON DE BUJIA COMPLT		3				*1 *1
23	90465–06M90	CLAMP BRIDA	1					
24	97013–06012	BOLT PERNO	1					
25	92903–06100	WASHER, SPRING RONDANA SENCILLA	1					

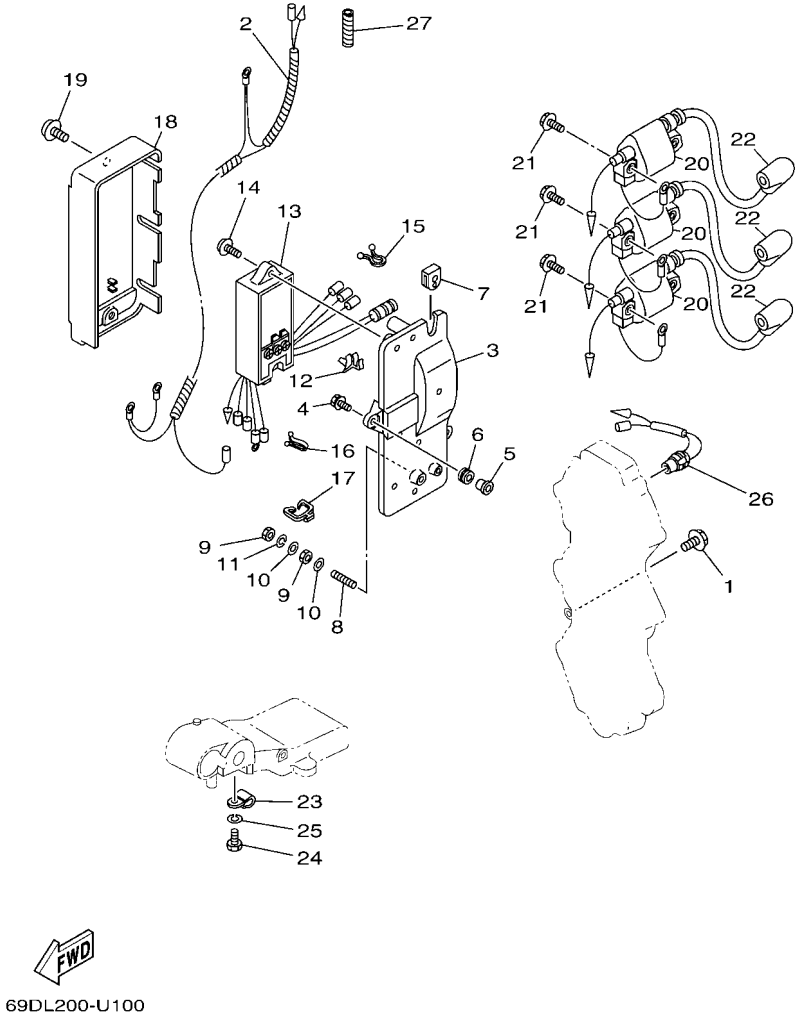

*1: EXCEPT FOR OMN,CHN,KOR,TWN,BRN,OTH

FIG. 10 ELECTRICAL 1 — EQUIPO ELECTRICO 1

REF. NO.	PART NO. CODIGO Nº	DESCRIPTION DESCRIPCION	MHD	WHD	WD			REMARKS OBSERVACIONES
26	688–82560–10	THERMO SWITCH ASSY INTER. DE TERMO	1	1	1			
27	90446–10M02	HOSE TUBO RESEIRADERO	1	1	1			

FIG. 11 ELECTRICAL 2 — EQUIPO ELECTRICO 2

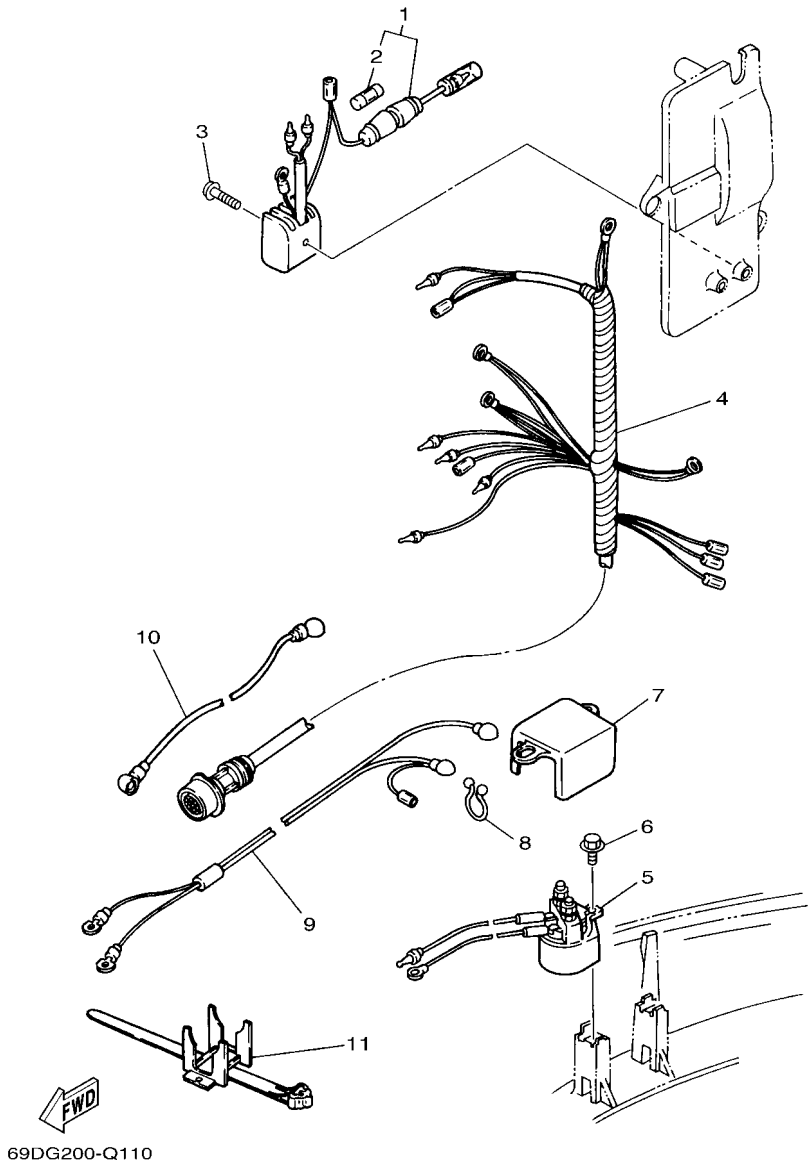

*1: EXCEPT FOR OMN,CHN,KOR,TWN,BRN,OTH

REF. NO.	PART NO. CODIGO Nº	DESCRIPTION DESCRIPCION	MHD	WHD	WD			REMARKS OBSERVACIONES
1	6G1–81970–63	RECTIFIER ASSY RECTIFICADOR COMPLETO		1				
2	6G1–82151–01	.FUSE (10A) .FUSIBLE (10A)		1				
3	97980–05225	SCREW, WITH WASHER TORNILLO, CON ARANDELA		1				
4	69D–82590–10	WIRE HARNESS ASSY CONJUNTO DE CABLES		1				
	69D–82590–20	WIRE HARNESS ASSY CONJUNTO DE CABLES		1				*1 *1
5	688–81950–10	RELAY ASSY RELE COMPLETO		1				
6	97513–06516	BOLT, WITH WASHER PERNO CON ARANDELA		1				
7	6H3–82164–00	CASE 2 BUJE		1				
8	90464–15M11	CLAMP BRIDA		1				
9	6H3–82105–02	BATTERY CABLE CABLE DE BATERIA		1				
10	6H3–82117–01	WIRE, LEAD CABLE CONDUCTOR		1				
11	688–82594–00	CLAMP GRAMPA		1				

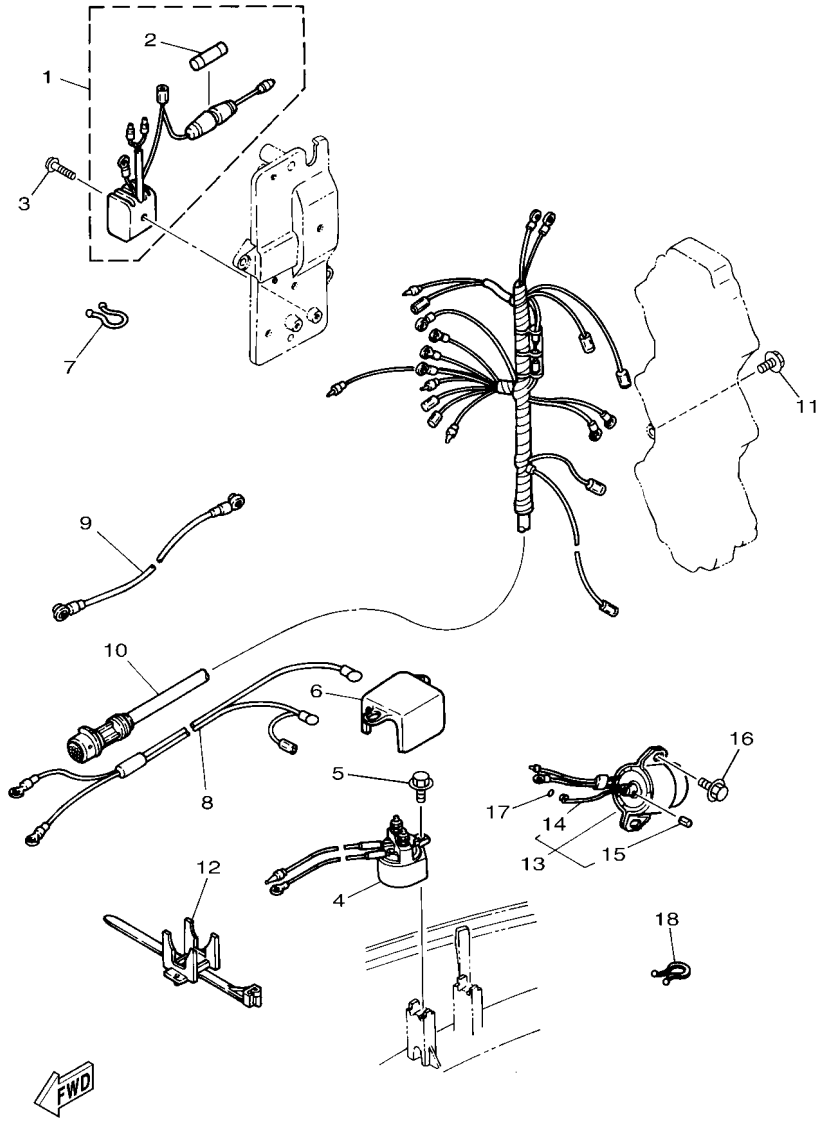

69DH200-R120

FIG. 12 ELECTRICAL 3 — EQUIPO ELECTRICO 3

REF. NO.	PART NO. CODIGO Nº	DESCRIPTION DESCRIPCION	MHD	WHD	WD			REMARKS OBSERVACIONES
1	6G1–81970–63	RECTIFIER ASSY RECTIFICADOR COMPLETO			1			
2	6G1–82151–01	.FUSE (10A) .FUSIBLE (10A)			1			
3	97980–05225	SCREW, WITH WASHER TORNILLO, CON ARANDELA			1			
4	688–81950–10	RELAY ASSY RELE COMPLETO			1			
5	97513–06516	BOLT, WITH WASHER PERNO CON ARANDELA			1			
6	6H3–82164–00	CASE 2 BUJE			1			
7	90464–15M11	CLAMP BRIDA			1			
8	6H3–82105–02	BATTERY CABLE CABLE DE BATERIA			1			
9	6H3–82117–01	WIRE, LEAD CABLE CONDUCTOR			1			
10	6H3–82590–01	WIRE HARNESS ASSY CONJUNTO DE CABLES			1			
11	97513–06512	BOLT, WITH WASHER PERNO CON ARANDELA			1			
12	688–82594–00	CLAMP GRAMPA			1			
13	6H3–86110–02	SOLENOID SOLENOIDE			1			
14	6H3–86116–00	.WIRE, PULL .ALAMBRE-JALADOR			1			
15	91690–30010	.PIN, SPRING .PASADOR DE RESORTE			1			
16	97513–06516	BOLT, WITH WASHER PERNO CON ARANDELA			2			
17	93210–03261	O-RING ANILLO O			1			
18	90465–18147	CLAMP BRIDA			1			

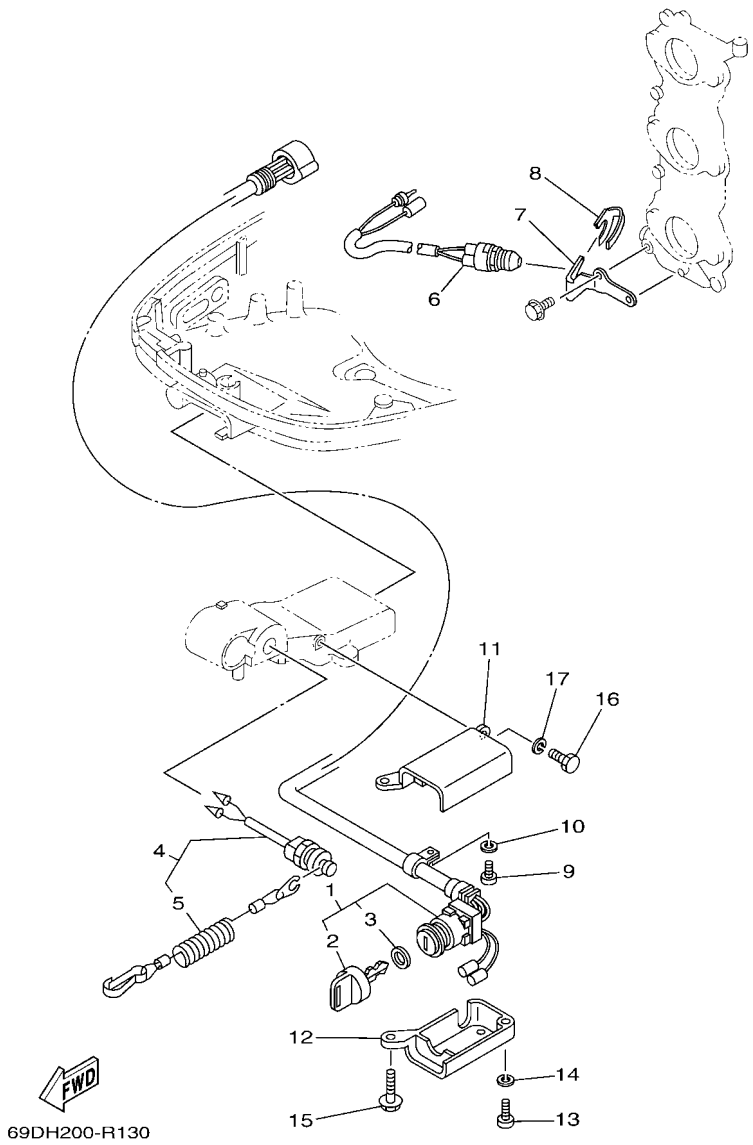

FIG. 13 ELECTRICAL 4 — EQUIPO ELECTRICO 4

REF. NO.	PART NO. CODIGO Nº	DESCRIPTION DESCRIPCION	MHD	WHD	WD			REMARKS OBSERVACIONES
1	6H3–82510–21	MAIN SWITCH ASSY CONJUNTO DE LLAVE IGNICION		1				
2	676–82577–01	.CAP, KEY .TAPA		1				
3	703–82532–00	.CAP .TAPA		1				
4	688–82575–12	ENGINE STOP SWITCH ASSY INTERRUPTOR DE PARADA COMPL		1				
5	682–82556–00	.LANYARD, STOP SWITCH .CORDON DE INTERRUPTOR PARADA		1				
6	6H3–82540–01	NEUTRAL SWITCH ASSY INTERRUPTOR NEUTRAL COMPL		1				
7	6H3–82554–00	STAY, NEUTRAL SWITCH SOPORTE INTERRUPTOR DE NEUTRAL		1				
8	663–82555–01	DAMPER, MAIN SWITCH 1 AMORT.DE INTER.PPAL.1		1				
9	97885–06012	SCREW, PAN HEAD TORNILLO A MUESCA		1				
10	92995–06100	WASHER, SPRING ARANDELA		1				
11	697–8252E–02–8D	COVER, MAIN SWITCH 1 CUBIELA INTERRUPTOR PRINC.1		1				
12	697–8252F–02–8D	COVER, MAIN SWITCH 2 CUBIELA INTERRUPTOR PRINC.2		1				
13	97880–06025	SCREW, PAN HEAD TORNILLO DE CABEZA CON PLANA		1				
14	92990–06100	WASHER, SPRING ARANDELA PLANA		1				
15	97513–06530	BOLT, WITH WASHER PERNO CON ARANDELA		1				
16	97013–06020	BOLT PERNO		1				
17	92903–06100	WASHER, SPRING RONDANA SENCILLA		1				

FIG. 14 ELECTRICAL 5 — EQUIPO ELECTRICO 5

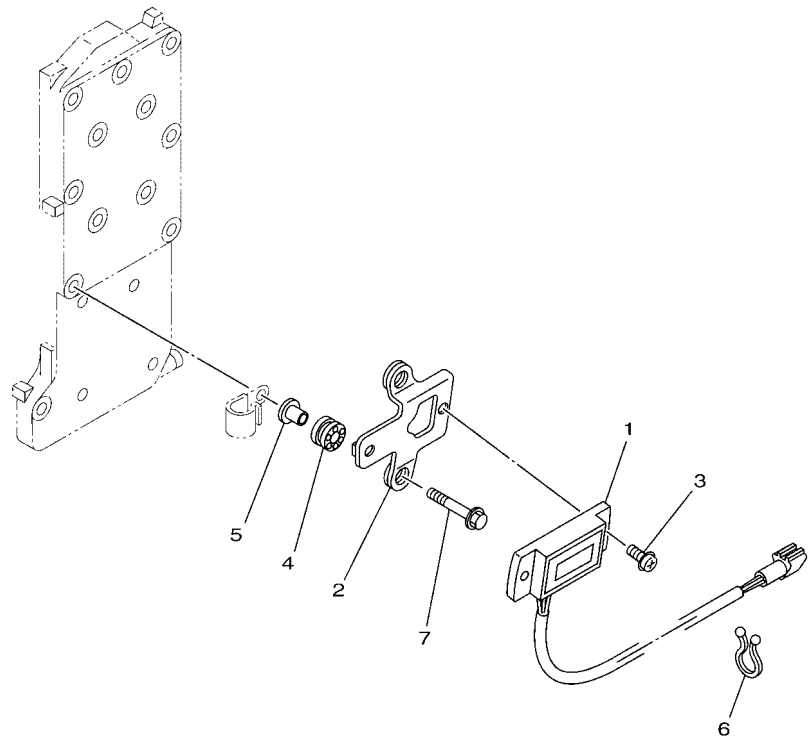

69DG200-Q140

*1: EXCEPT FOR OMN,CHN,KOR,TWN,BRN,OTH

REF. NO.	PART NO. CODIGO Nº	DESCRIPTION DESCRIPCION	MHD	WHD	WD			REMARKS OBSERVACIONES
1	6Y5–83504–22	HOUR METER ASSY MEDIDOR DE HORAS COMPLETO		1				*1 *1
2	69D–83519–00	BRACKET, METER SOPORTE DE MEDIDOR		1				*1 *1
3	90159–05M13	SCREW, WITH WASHER TORNILLO CON VALONA		2				*1 *1
4	64J–85516–00	SPACER ESPACIADOR		2				*1 *1
5	69D–42758–00	COLLAR COLLAR		2				*1 *1
6	90464–15M11	CLAMP BRIDA		1				*1 *1
7	90119–06306	BOLT, WITH WASHER TORNILLO CON ARANDELA		2				*1 *1

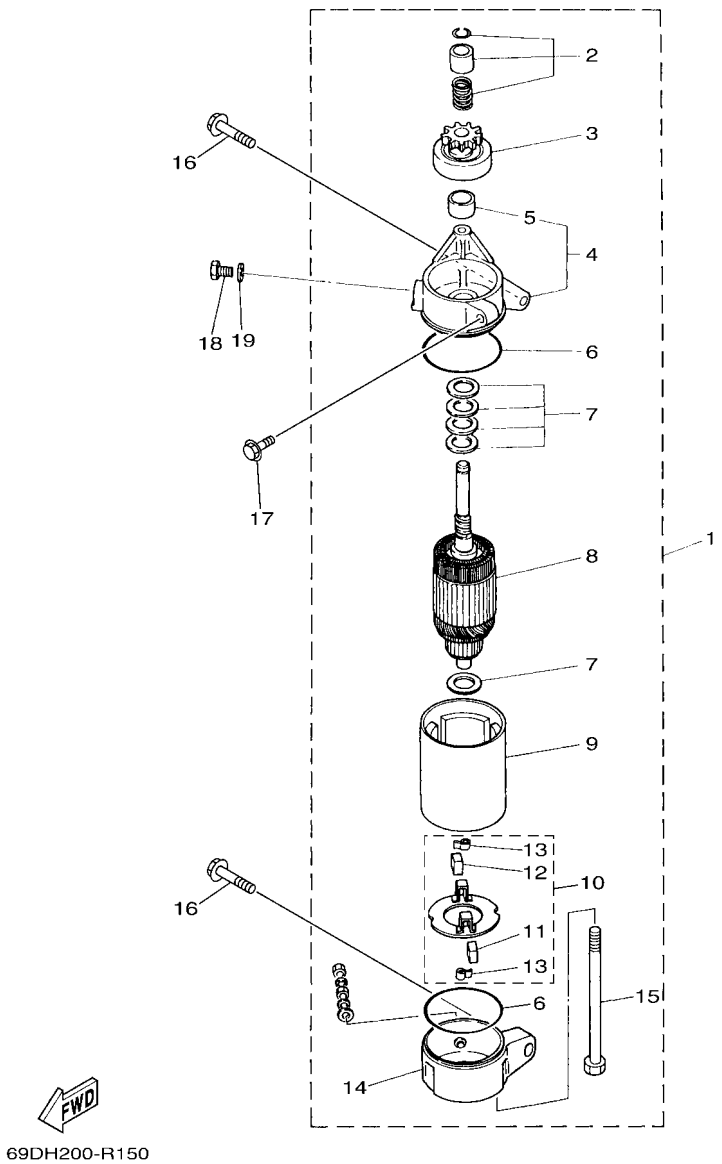

FIG. 15 STARTING MOTOR — MOTOR DE ARRANQUE

REF. NO.	PART NO. CODIGO Nº	DESCRIPTION DESCRIPCION	MHD	WHD	WD			REMARKS OBSERVACIONES
1	6H3–81800–11	STARTING MOTOR ASSY MOTOR DE ARRANQUE COMPLETO		1	1			
2	689–81857–11	.PINION STOPPER SET .JUEGO TAPON PINON		1	1			
3	6H3–81807–10	.GEAR ASSY, STARTING MOTOR .PINON CONJUNTO		1	1			
4	6H3–81830–10	.FRONT BRACKET ASSY .SOPORTE DELANTERO COMPLETO		1	1			
5	689–81831–00	..METAL, FRONT ..METAL, DELANTERO		1	1			
6	689–81847–11	.O-RING .ANILLO GOMA		2	2			
7	689–81809–11	.WASHER KIT .JUEGO DE ARANDELA		1	1			
8	689–81850–12	.ARMATURE ASSY .INDUCIDO COMPLETO		1	1			
9	6H3–81810–10	.STATOR ASSY .ESTATOR COMPLETO		1	1			
10	689–81840–11	.BRUSH HOLDER ASSY .SOSTEN DE ESCOBILLA COMPLETO		1	1			
11	689–81812–11	..BRUSH 2 ..ESCOBILLA 2		1	1			
12	689–81811–11	..BRUSH 1 ..ESCOBILLA 1		1	1			
13	689–81813–10	..SPRING, BRUSH ..RESORTE DE ESCOBILLA		2	2			
14	6H3–81820–11	.REAR BRACKET ASSY .CUBIERTA TRASERA COMPL		1	1			
15	689–81826–10	.BOLT .PERNO		2	2			
16	97513–08535	BOLT, WITH WASHER PERNO CON ARANDELA		2	2			
17	97513–06525	BOLT, WITH WASHER PERNO CON ARANDELA		1	1			
18	97013–08016	BOLT PERNO		1	1			
19	92903–08600	WASHER, PLATE RONDANA SENCILLA		1	1			

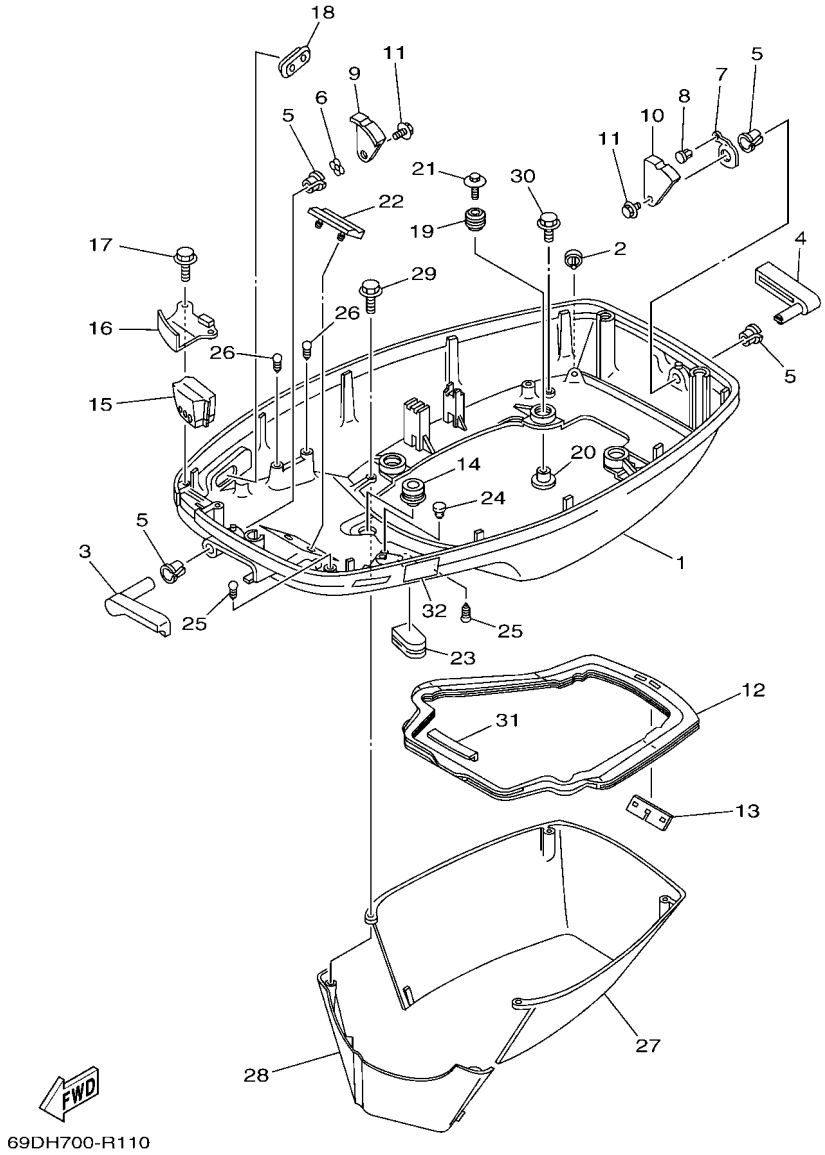

FIG. 16 BOTTOM COWLING — CUBIERTA INFERIOR

REF. NO.	PART NO. CODIGO Nº	DESCRIPTION DESCRIPCION	MHD	WHD	WD			REMARKS OBSERVACIONES
1	6H3–42711–06–8D	COWLING, BOTTOM 1 CUBIERTA INFERIOR 1	1	1	1			
2	69D–44391–00	NIPPLE, HOSE NIPLE MANGUERA	1	1	1			
3	6H3–42815–01–8D	LEVER, CLAMP 1 PALANCA ABRAZADERA 1	1	1	1			
4	6H3–42817–01–8D	LEVER, CLAMP 3 PALANCA ABRAZADERA 3	1	1	1			
5	90386–13M38	BUSH BUJE	4	4	4			
6	90206–13M10	WASHER, WAVE ARANDELA ONDULADA	1	1	1			
7	6H3–42813–00	SPRING, CLAMP LEVER RESORTE	1	1	1			
8	90269–04M03	RIVET REMACHE	1	1	1			
9	6H3–42816–00	LEVER, CLAMP 2 PALANCA ABRAZADERA 2	1	1	1			
10	6H3–42818–00	LEVER, CLAMP 4 PALANCA, ABRAZADERA 4	1	1	1			
11	90119–06275	BOLT, WITH WASHER TORNILLO CON ARANDELA	2	2	2			
12	6H3–42716–02	RUBBER SEAL 1 SELLO DE GOMA 1	1	1	1			
13	6K5–42717–00	RUBBER, SEAL 2 GOMA	1	1	1			
14	6E5–42724–00	GROMMET TAPON	1	1	1			
15	6K5–42725–00	GROMMET TAPON	1					
	6H3–42725–20	GROMMET TAPON		1				
	6H3–42725–00	GROMMET TAPON			1			
16	6H3–42738–01–CA	PLATE, FITTING PLACA DE AJUSTE	1	1	1			
17	97E95–06516	BOLT, HEXAGON W/W DEEP RECESS TORNILLO HEXAGONAL CON RONDONA	2	2	2			
18	6H3–42727–00	GROMMET TAPON	1	1	1			
19	6BG–42748–00	GROMMET TAPON	4	4	4			
20	90387–06M69	COLLAR ESPACIADOR	4	4	4			
21	90119–06291	BOLT, WITH WASHER TORNILLO CON ARANDELA	4	4	4			
22	6H3–42768–00	DAMPER AMORTIGUADOR	1	1	1			
23	6H4–42726–00	GROMMET TAPON	1	1	1			
24	703–82119–00	COVER, LEAD WIRE CUBIERTA DE CABLE CONDUCTOR	2	2	2			
25	90338–05M03	PLUG TAPON	2	2	2			

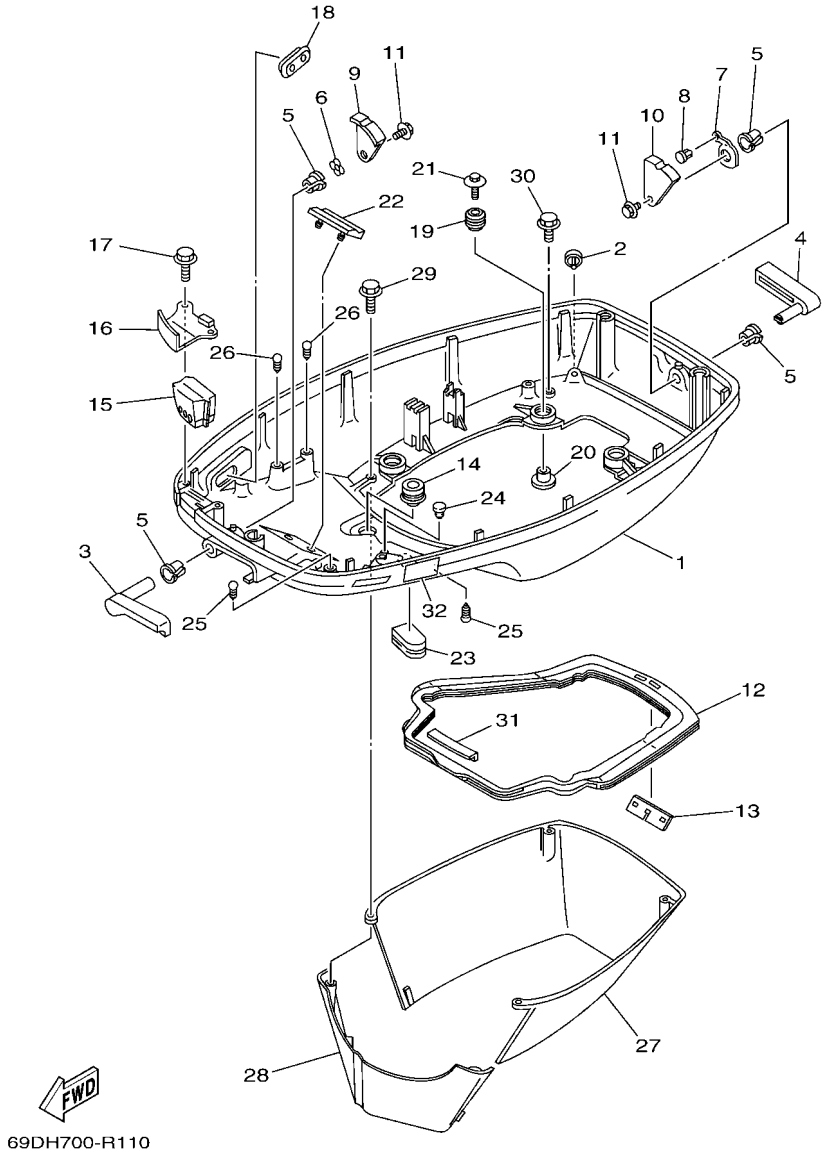

FIG. 16 BOTTOM COWLING — CUBIERTA INFERIOR

REF. NO.	PART NO. CODIGO Nº	DESCRIPTION DESCRIPCION	MHD	WHD	WD			REMARKS OBSERVACIONES
26	90338–05M03	PLUG TAPON	2					
27	6H3–42741–01–8D	APRON MANDIL	1	1	1			
28	6H3–42771–01–8D	APRON MANDIL	1	1	1			
29	97E95–06525	BOLT, HEXAGON W/W DEEP RECESS TORNILLO HEXAGONAL CON RONDONA	2	2	2			
30	97E95–06520	BOLT, HEXAGON W/W DEEP RECESS TORNILLO HEXAGONAL CON RONDONA	2	2	2			
31	6H3–42718–00	RUBBER, SEAL 3 GOMA	1	1	1			
32	6EE–42794–40	LABEL, WARNING (GENERAL) ETIQUETA DE PRECAUCION	1	1	1			

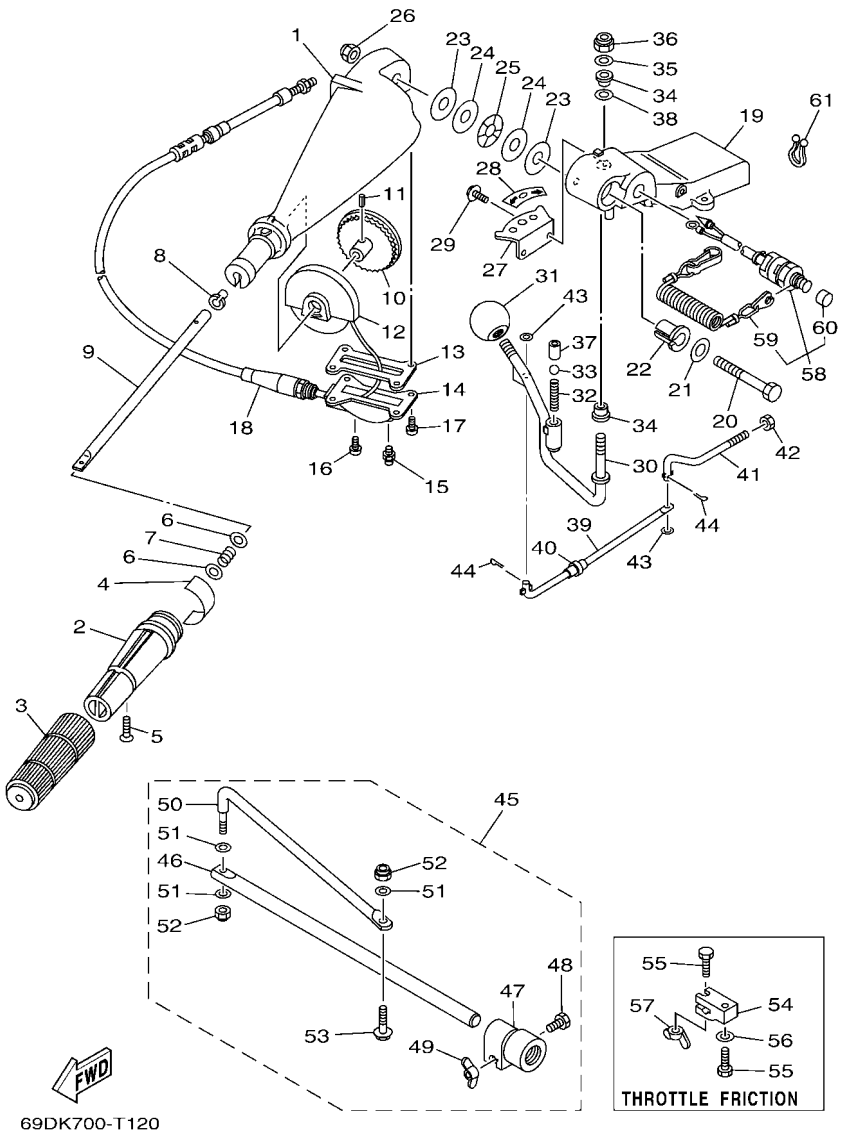

FIG. 17 STEERING — DIRECCION

REF. NO.	PART NO. CODIGO Nº	DESCRIPTION DESCRIPCION	MHD	WHD	WD			REMARKS OBSERVACIONES
1	663–42111–02–8D	HANDLE, STEERING MANIJA DE DIRECCION	1	1				
	692–42111–21–8D	HANDLE, STEERING MANIJA DE DIRECCION	1	1				PULL TO OPEN TYPE PULL TO OPEN TYPE
2	664–42119–00	GRIP, STEERING HANDLE MANGO, MANIJA DE DIRRECCION	1	1				
3	6G1–42177–00	RUBBER, HANDLE HULE DE MANIJA	1	1				
4	61U–42137–00	INDICATOR, THROTTLE INDICADOR ACELERADOR	1	1				
5	90152–05011	SCREW, COUNTERSUNK TORNILLO EMBUTIDO	1	1				
6	90201–10M02	WASHER, PLATE ARANDELA PLANA	2	2				
7	90501–23215	SPRING, COMPRESSION RESORTE DE COMPRESION	1	1				
8	90386–08032	BUSH BUJE	1	1				
9	663–42115–00	SHAFT, STEERING HANDLE EJE MANIJA DE DIRECCION	1	1				
	692–42115–00	SHAFT, STEERING HANDLE EJE MANIJA DE DIRECCION	1	1				PULL TO OPEN TYPE PULL TO OPEN TYPE
10	663–42138–00	LEVER, THROTTLE PLANCA DE ACELERACION	1	1				
11	90254–03003	PIN, SPRING PASADOR DE TIPO A RESORTE	1	1				
12	663–42135–01	HOUSING, THROTTLE LEVER CAJA PALANCA ACELERADOR	1	1				
13	663–42133–01	GASKET EMPAQUE	1	1				
14	663–42134–03–94	COVER, THROTTLE LEVER CUBIERTA PALANCA ACELERADOR	1	1				
15	93700–06002	NIPPLE, GREASE BOQUILLA DE ENGRASAR	1	1				
16	97885–06008	SCREW, PAN HEAD TORNILLO A MUESCA	1	1				
17	97885–05012	SCREW, PAN HEAD TORNILLO A MUESCA	4	4				
18	692–26301–03	THROTTLE CABLE ASSY CABLE DE ACELERADOR COMPLETO	1	1				
19	692–42121–02–8D	BRACKET SOPORTE	1	1				
20	90101–12M06	BOLT TORNILLO	1	1				
21	92990–12200	WASHER, PLAIN ARANDELA PLANA	1	1				
22	90386–12089	BUSH BUJE	1	1				
23	90202–12092	WASHER, PLATE ARANDELA DE PLANA	2	2				
24	90201–12537	WASHER, PLATE ARANDELA PLANA	2	2				
25	90206–12054	WASHER, WAVE ARANDELA ONDULADA	1	1				

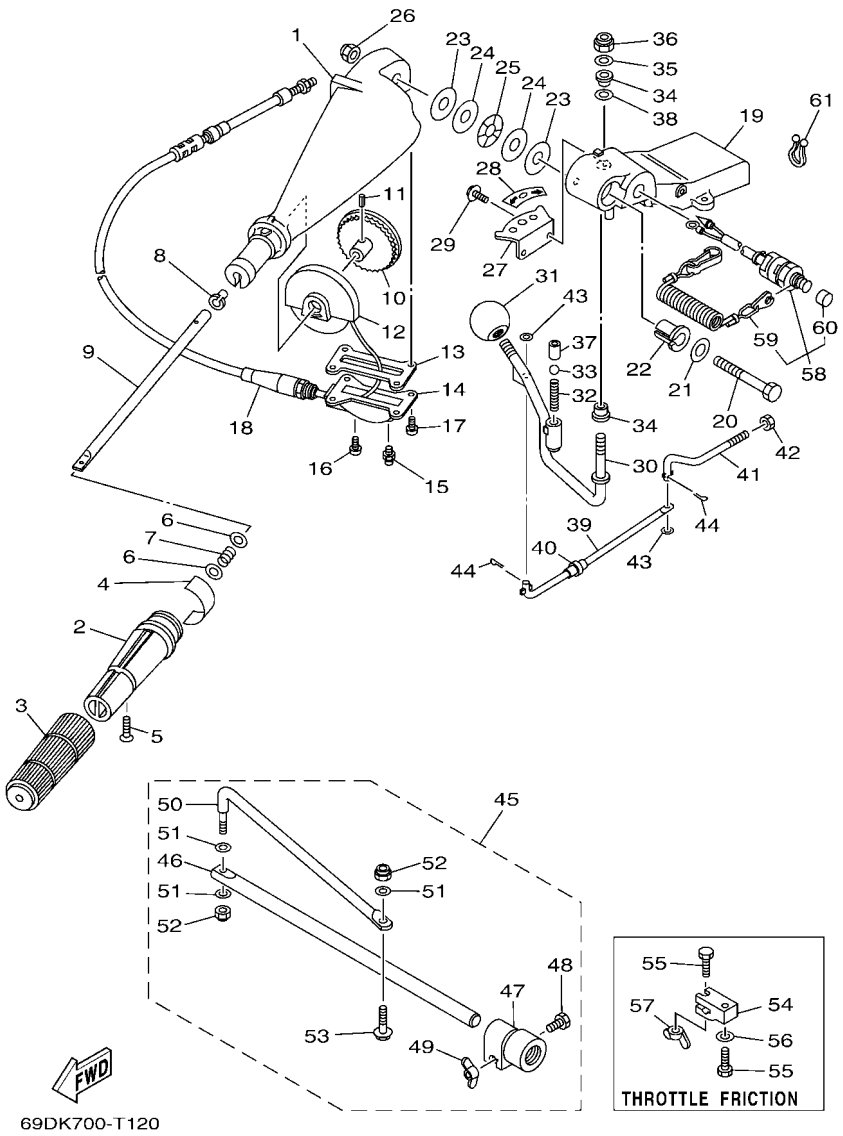

FIG. 17 STEERING — DIRECCION

REF. NO.	PART NO. CODIGO Nº	DESCRIPTION DESCRIPCION	MHD	WHD	WD			REMARKS OBSERVACIONES
26	90185–12058	NUT, SELF-LOCKING TUERCA AUTOBLOCANTE	1	1				
27	697–44113–00	CAM PLATE, HANDLE PLACA DE LA LEVA DEL MANGO	1	1				
28	6K5–44191–00	INDICATOR, SHIFT INDICADOR DE CAMBIOS	1	1				
29	97513–06516	BOLT, WITH WASHER PERNO CON ARANDELA	2	2				
30	692–44159–01	HANDLE, GEAR SHIFT MANIJA DE CAMBIO DE MARCHAS	1	1				
31	663–44173–00	LEVER, SHIFT CONTROL PALANCA CONTROL CAMBIOS	1	1				
32	90501–16M17	SPRING, COMPRESSION RESORTE DE COMPRESION	1	1				
33	93515–32M01	BALL ESFERA	1	1				
34	90386–10009	BUSH BUJE	2	2				
35	90201–10120	WASHER, PLATE ARANDELA PLANA	1	1				
36	90185–10027	NUT, SELF-LOCKING TUERCA AUTOBLOCANTE	1	1				
37	90387–12M30	COLLAR ESPACIADOR	1	1				
38	90201–12M34	WASHER, PLATE ARANDELA PLANA	1	1				
39	6H3–42191–01	ROD 1 VARILLA 1	1	1				
40	90386–06088	BUSH BUJE	1	1				
41	6H3–42192–00	ROD 2 VARILLA 2	1	1				
42	700–48339–00	NUT, CABLE END TUERCA TERMINAL	1	1				
43	92990–06600	WASHER, PLATE ARANDELA PLANA	2	2				
44	91490–25012	PIN. COTTER CHAVETA	2	2				
45	69D–42508–01	STEERING FRICTION ASSY DIRECCION FRICCION COMP.	1	1				FOR OMN FOR OMN
46	663–42518–00	.SHAFT, FRICTION .EJE FRICCION	1	1				
47	67G–42528–00	.PLATE, FRICTION .PIEZA DE FRICCION	1	1				
48	97080–06035	.BOLT .PERNO	1	1				
49	90175–06003	.NUT, WING .TUERCA MARIPOSA	1	1				
50	69D–42515–00	.ROD, STEERING LINK .VARILLA ESLABON DIRECCION	1	1				
51	92990–08600	.WASHER, PLATE .ARANDELA PLANA	3	3				
52	90185–08057	.NUT, SELF-LOCKING .TUERCA AUTOBLOCANTE	2	2				

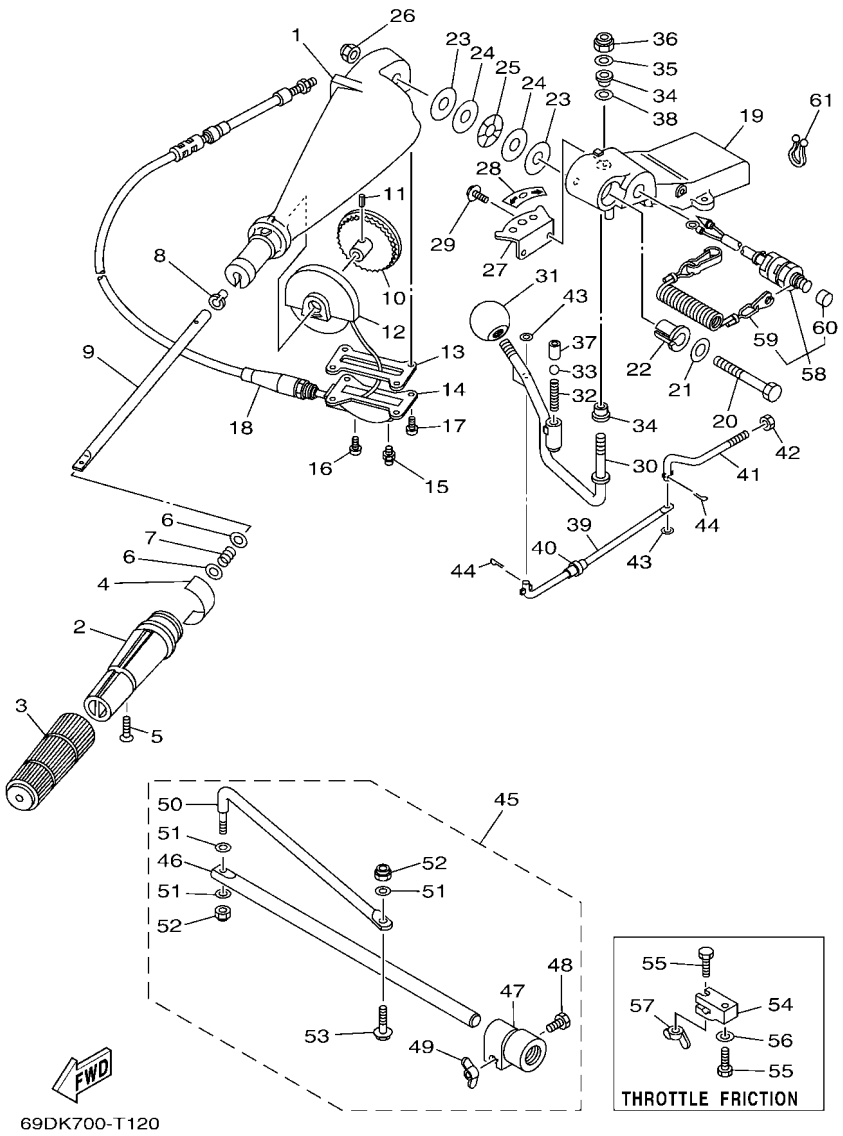

FIG. 17 STEERING — DIRECCION

REF. NO.	PART NO. CODIGO Nº	DESCRIPTION DESCRIPCION	MHD	WHD	WD			REMARKS OBSERVACIONES
53	97E95–08530	.BOLT, HEXAGON W/W DEEP RECESS .TORNILLO HEXAGONAL CON RONDONA	1	1				
54	663–42126–01	FRICTION, STEERING HANDLE GRIP FRICCION DE MANGO DIRECCION	1	1				
55	90101–06M27	BOLT TORNILLO	2	2				
56	92990–06600	WASHER, PLATE ARANDELA PLANA	1	1				
57	90175–06003	NUT, WING TUERCA MARIPOSA	1	1				
58	6K5–82575–03	ENGINE STOP SWITCH ASSY INTERRUPTOR DE PARADA COMPL	1					
59	682–82556–00	.LANYARD, STOP SWITCH .CORDON DE INTERRUPTOR PARADA	1					
60	689–8257Y–00	.CAP .TAPA	1					
61	90464–08M07	CLAMP BRIDA	1					

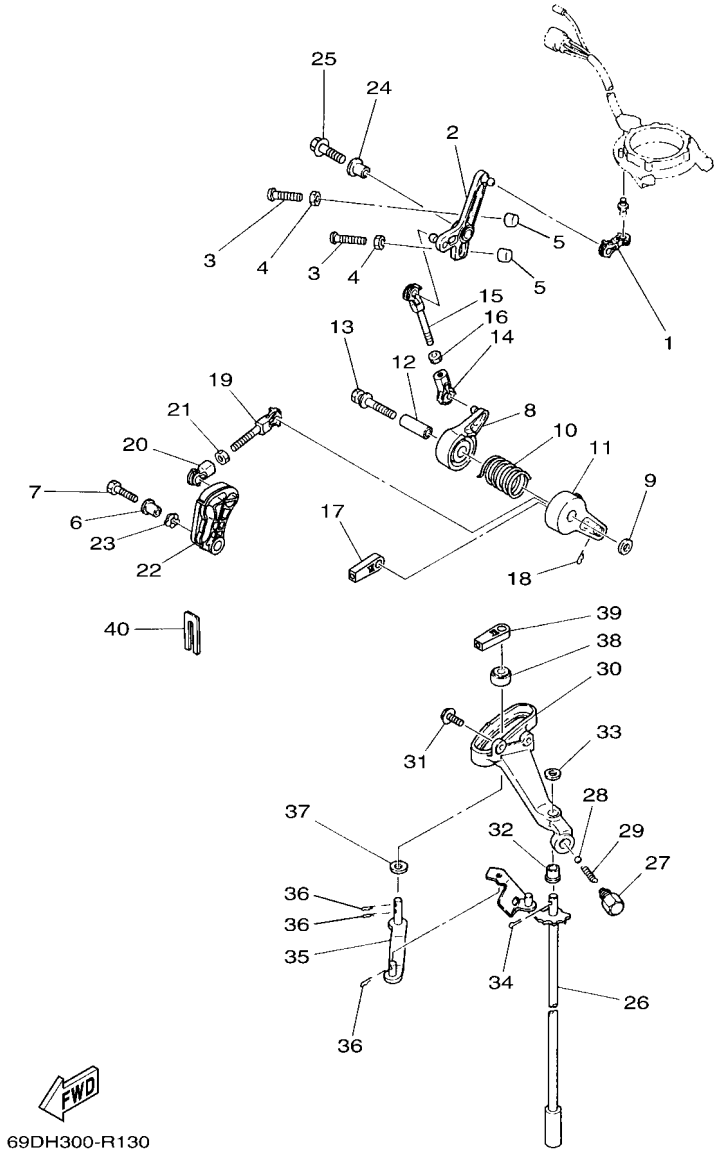

FIG. 18 CONTROL

REF. NO.	PART NO. CODIGO Nº	DESCRIPTION DESCRIPCION	MHD	WHD	WD			REMARKS OBSERVACIONES
1	6H3–41238–00	JOINT, LINK CONECTOR	1	1	1			
2	6H3–41631–00	LEVER, MAGNETO CONTROL PALANCA DE CONTROL DE MAGNETO	1	1	1			
3	90157–06M13	SCREW, PAN HEAD TORNILLO CABEZA CONICA PLANA	2	2	2			
4	95380–06600	NUT, HEXAGON TUERCA	2	2	2			
5	688–44194–00	CAP TAPA	2	2	2			
6	90387–06289	COLLAR ESPACIADOR	1	1	1			
7	97D95–06025	BOLT, HEXAGON DEEP RECESS TORNILLO HEXAGONAL	1	1	1			
8	6H3–41632–00	LEVER, MAGNETO CONTROL PALANCA DE CONTROL DE MAGNETO	1	1	1			
9	90201–06M31	WASHER, PLATE ARANDELA PLANA	1	1	1			
10	90508–29051	SPRING, TORSION RESORTE DE TORSION	1	1	1			
11	6H3–41633–00	LEVER, MAGNETO CONTROL PALANCA DE CONTROL DE MAGNETO	1	1	1			
12	90387–06M59	COLLAR ESPACIADOR	1	1	1			
13	90119–06305	BOLT, WITH WASHER TORNILLO CON ARANDELA	1	1	1			
14	662–41237–01	JOINT, LINK CONECTOR	1	1	1			
15	679–41636–00	ROD, MAGNETO CONTROL VARILLA DE CONTROL MAGNETO	1	1	1			
16	95380–05600	NUT TUERCA	1	1	1			
17	6FM–48344–00	CABLE END, REMOTE CONTROL BASE CONTROL	1	1	1			
18	90468–18008	CLIP PRESILLA	1	1	1			
19	682–41237–50	JOINT, LINK CONECTOR	1	1	1			
20	662–41237–01	JOINT, LINK CONECTOR	1	1	1			
21	95380–05600	NUT TUERCA	1	1	1			
22	6H3–41213–20	CAM, ACCEL. LEVA ACELERADOR	1	1	1			
23	90206–10M04	WASHER, WAVE ARANDELA ONDULADA	1	1	1			
24	90387–06289	COLLAR ESPACIADOR	1	1	1			
25	90119–06309	BOLT, WITH WASHER TORNILLO CON ARANDELA	1	1	1			
26	6K5–44120–03	HANDLE GEAR SHIFT ASSY MANIJA DE CAMBIO COMPL	1					S(17.7") S(17.7")
	6K5–44120–13	HANDLE GEAR SHIFT ASSY MANIJA DE CAMBIO COMPL	1	1	1			L(22.5") L(22.5")

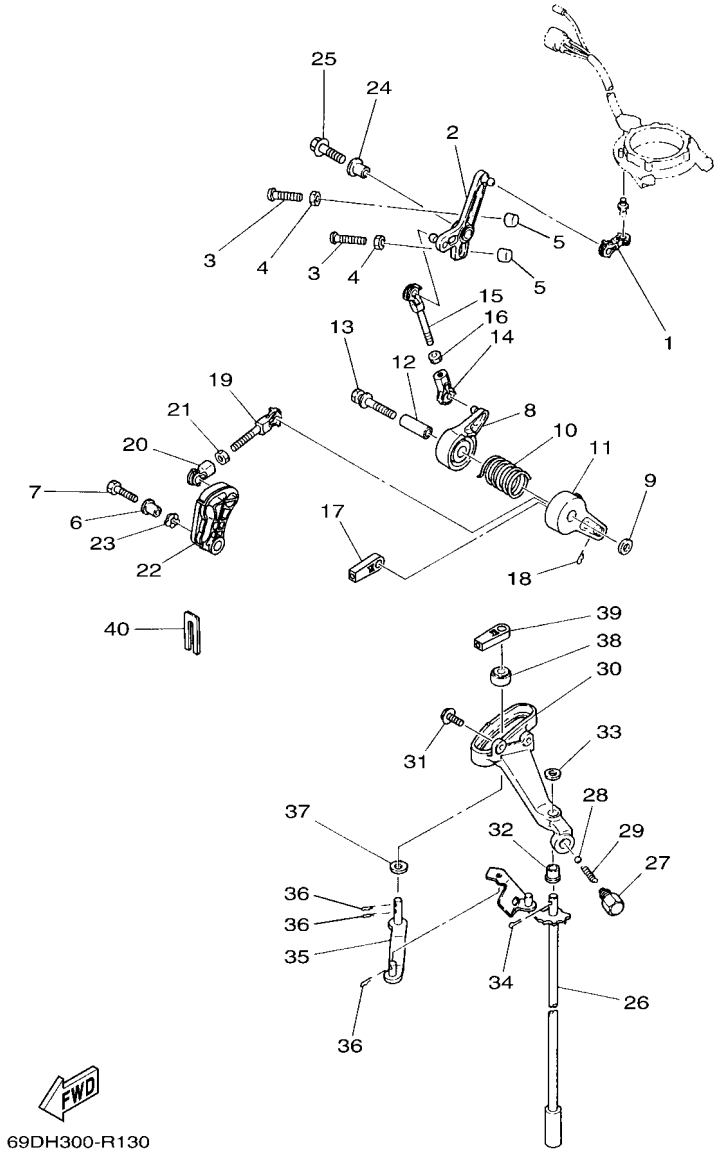

FIG. 18 CONTROL

REF. NO.	PART NO. CODIGO Nº	DESCRIPTION DESCRIPCION	MHD	WHD	WD			REMARKS OBSERVACIONES
26	69D–44120–22	HANDLE GEAR SHIFT ASSY MANIJA DE CAMBIO COMPL	1					X(25.5") X(25.5")
27	648–42715–00	BUSHING BUJE	1	1	1			
28	93501–04M02	BALL BOLA	1	1	1			
29	90501–12082	SPRING, COMPRESSION RESORTE DE COMPRESION	1	1	1			
30	6H3–44117–00–94	BRACKET SOPORTE	1	1	1			UR UR
	6J2–44117–01–94	BRACKET SOPORTE	1	1				UR FOR OMN,OTH UR FOR OMN,OTH
31	97513–06520	BOLT, WITH WASHER PERNO CON ARANDELA	2	2	2			
32	90386–07M58	BUSH BUJE	1	1	1			
33	92990–08200	WASHER, PLAIN ARANDELA PLANA	1	1	1			
34	91490–20012	PIN. COTTER CHAVETA	1	1	1			
35	6H3–44121–01	LEVER, SHIFT ROD PALANCA VARILLA CAMBIOS	1	1	1			
36	90468–18008	CLIP PRESILLA	3	3	3			
37	90202–07M07	WASHER, PLATE ARANDELA DE PLANA	1	1	1			
38	688–44122–00	BUSHING, SHIFT ROD LEVER BUJE PALANCA VARILLA DE CAMBIO	1	1	1			
39	6FM–48344–00	CABLE END, REMOTE CONTROL BASE CONTROL	1	1	1			
40	6H3–48538–00	CLAMP, CABLE 1 GRAMPA DE CABLE	1	1	1			

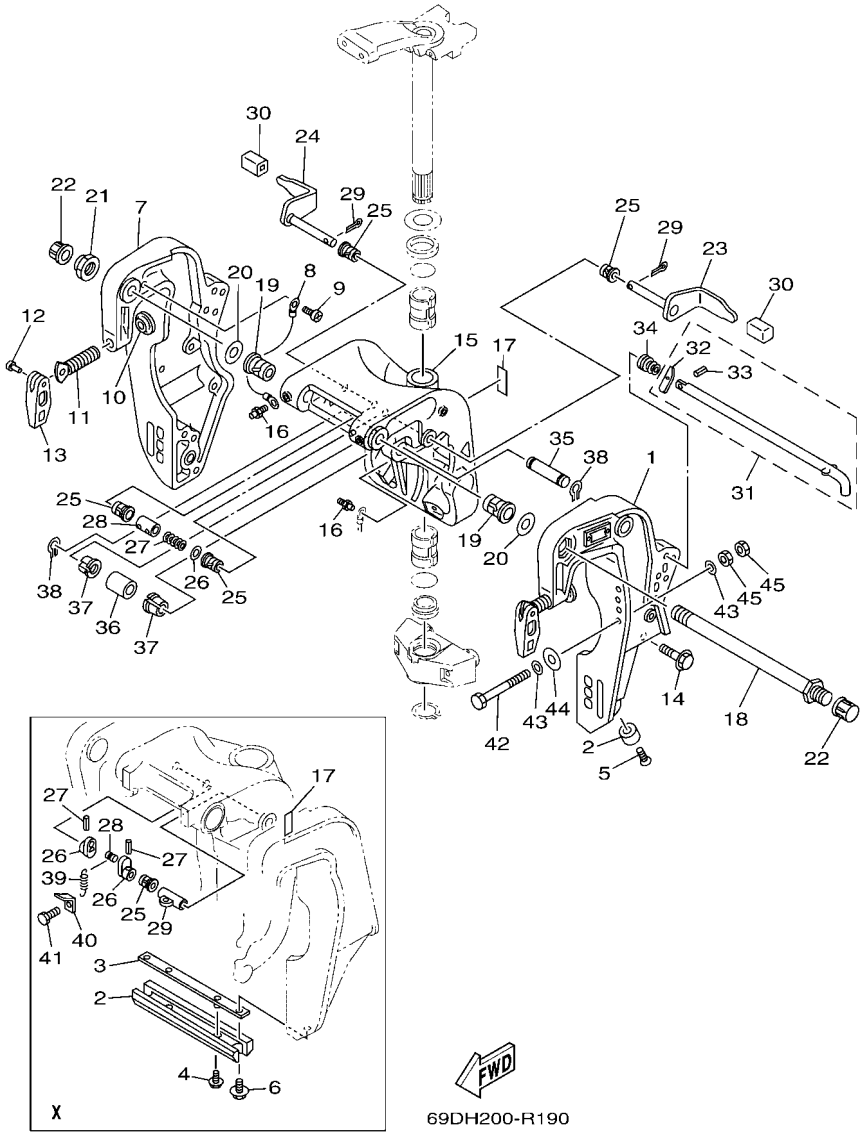

FIG. 19 BRACKET 1 — SOPORTE 1

REF. NO.	PART NO. CODIGO Nº	DESCRIPTION DESCRIPCION	MHD	WHD	WD			REMARKS OBSERVACIONES
1	697–43111–05–8D	BRACKET, CLAMP 1 SOPORTE DE LA ABRAZADERA 1	1					S(17.7") S(17.7")
	688–43111–13–8D	BRACKET, CLAMP 1 SOPORTE DE LA ABRAZADERA 1	1					X(25.5") X(25.5")
2	663–45251–00	ANODE CATODE	2					S(17.7") S(17.7")
	6H1–45251–03	ANODE CATODE	1					X(25.5") X(25.5")
3	6EK–44536–00	PLATE 2 PLACA 2	1					X(25.5") X(25.5")
4	90119–06274	BOLT, WITH WASHER TORNILLO CON ARANDELA	2					X(25.5") X(25.5")
5	90152–06M01	SCREW, COUNTERSUNK TORNILLO EMBUTIDO	2					S(17.7") S(17.7")
6	97E95–06616	BOLT, HEXAGON W/W DEEP RECESS TORNILLO HEXAGONAL CON RONDONA	2					X(25.5") X(25.5")
7	697–43112–03–8D	BRACKET, CLAMP 2 SOPORTE DE LA ABRAZADERA 2	1					S(17.7") S(17.7")
	688–43112–12–8D	BRACKET, CLAMP 2 SOPORTE DE LA ABRAZADERA 2	1					X(25.5") X(25.5")
8	6E5–82148–00	WIRE, LEAD 4 CABLE CONDUCTOR 4	1					
9	97880–06012	SCREW, PAN HEAD TORNILLO DE CABEZA CON PLANA	1					
10	648–43114–01	PAD, TRANSOM CLAMP ARANDELA DE ABRAZADERA	2					
11	663–43116–01	SCREW, TRANSOM CLAMP TORNILLO DE ABRAZADERA	2					
12	90243–04007	PIN PASADOR	2					
13	663–43118–01–8D	HANDLE, TRANSOM CLAMP MANIJA DE LA ABRAZADERA DEL ES	2					
14	97E95–10545	BOLT, HEXAGON W/W DEEP RECESS TORNILLO HEXAGONAL CON RONDONA	6					
15	697–43311–03–8D	BRACKET, SWIVEL 1 SOPORTE GIRATORIO 1	1					S(17.7") S(17.7")
	6H1–43311–02–8D	BRACKET, SWIVEL 1 SOPORTE GIRATORIO 1	1					X(25.5") X(25.5")
16	93700–06M03	NIPPLE, GREASE BOQUILLA DE ENGRASAR	3					
17	63D–43691–00	INDICATOR, TILT INDICADOR	1					
18	688–43131–03	BOLT, CLAMP BRACKET TORNILLO DE ABRAZADERA DEL SOP	1					
19	90386–22M15	BUSH BUJE	2					
20	90201–22M67	WASHER, PLATE ARANDELA PLANA	2					
21	90185–22043	NUT, SELF-LOCKING TUERCA AUTOBLOCANTE	1					
22	6G5–43145–01	CAP, CLAMP BRACKET TAPA	2					
23	688–43181–04	LEVER, TILT STOP 1 PALANCA TOPE INCLINACION 1	1					S(17.7") S(17.7")

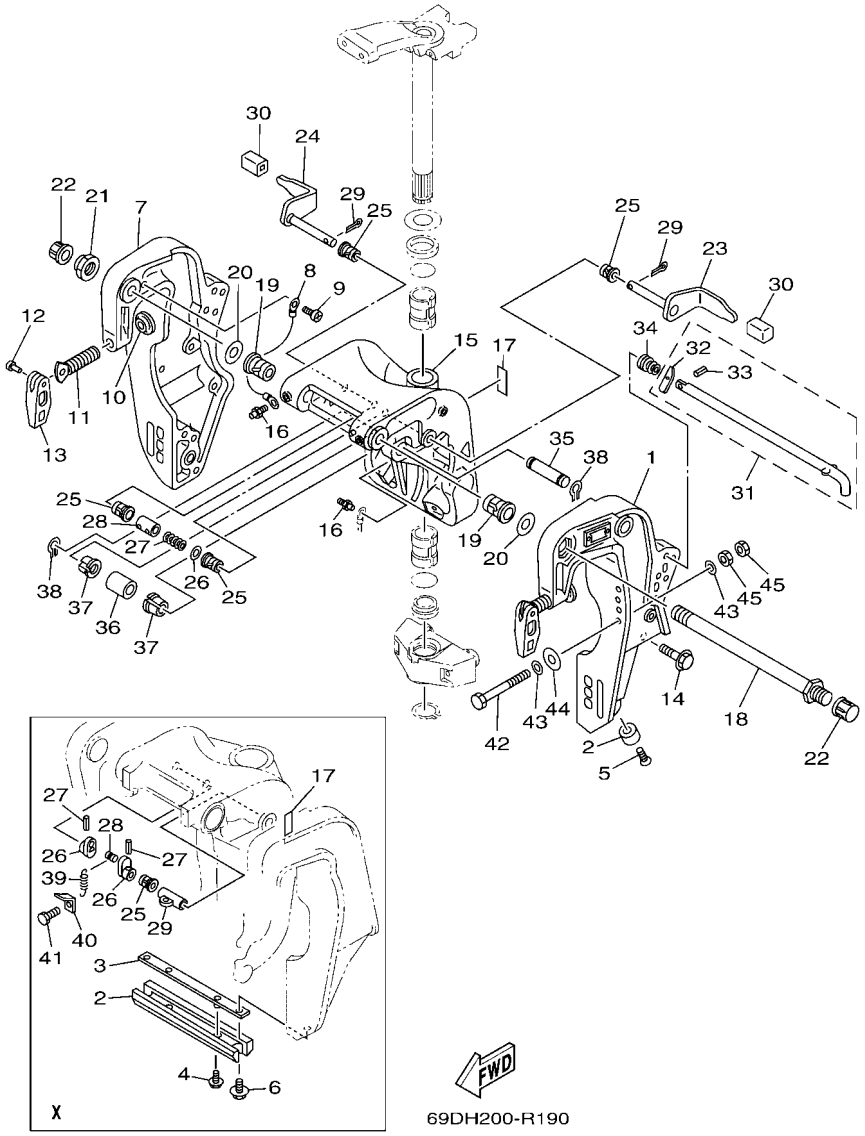

FIG. 19 BRACKET 1 — SOPORTE 1

REF. NO.	PART NO. CODIGO Nº	DESCRIPTION DESCRIPCION	MHD	WHD	WD			REMARKS OBSERVACIONES
23	688–43181–10	LEVER, TILT STOP 1 PALANCA TOPE INCLINACION 1	1					X(25.5") X(25.5")
24	688–43185–04	LEVER, TILT STOP 2 PALANCA TOPE INCLINACION 2	1					S(17.7") S(17.7")
	688–43185–10	LEVER, TILT STOP 2 PALANCA TOPE INCLINACION 2	1					X(25.5") X(25.5")
25	90386–10M16	BUSH BUJE	4					S(17.7") S(17.7")
	90386–10M16	BUSH BUJE	3					X(25.5") X(25.5")
26	92990–10600	WASHER, PLATE ARANDELA PLANA	1					S(17.7") S(17.7")
	6G5–43148–00	COLLAR, DISTANCE COLLAR	2					X(25.5") X(25.5")
27	90501–10M21	SPRING, COMPRESSION RESORTE DE COMPRESION	1					S(17.7") S(17.7")
	91690–30020	PIN, SPRING PASADOR DE RESORTE	2					X(25.5") X(25.5")
28	90387–10M38	COLLAR ESPACIADOR	1					S(17.7") S(17.7")
	90249–06M19	PIN PASADOR	1					X(25.5") X(25.5")
29	91490–30025	PIN. COTTER CHAVETA	2					S(17.7") S(17.7")
	90387–10M02	COLLAR ESPACIADOR	1					X(25.5") X(25.5")
30	663–43318–00	COVER CUBIERTA	2					
31	697–43160–00	TILT ROD ASSY VARILLA DE BASCULACION COMPL.	1					S(17.7") S(17.7")
	688–43160–01	TILT ROD ASSY VARILLA DE BASCULACION COMPL.	1					X(25.5") X(25.5")
32	688–43165–00	.PLATE, TILT LOCK .PLACA DE TOPE, VARILLA SEGURID	1					
33	91690–30012	.PIN, SPRING .PASADOR DE RESORTE	1					
34	90502–20M03	SPRING, CONICAL RESORTE CONICO	1					S(17.7") S(17.7")
	90502–16M02	SPRING, CONICAL RESORTE CONICO	1					X(25.5") X(25.5")
35	69D–43126–01	PIN, UPPER SHOCK MOUNT PASADOR DE AMORTIGUADOR SUPERI	1					
36	90386–18M21	BUSH BUJE	1					
37	90386–18M35	BUSH BUJE	2					
38	93410–18M05	CIRCLIP SEGURO	2					
39	90506–14M24	SPRING, TENSION RESORTE DE TENSION	1					X(25.5") X(25.5")
40	6G5–43144–00	HOOK, SPRING GANCHO	1					X(25.5") X(25.5")
41	97D95–06010	BOLT, HEXAGON DEEP RECESS TORNILLO HEXAGONAL	1					X(25.5") X(25.5")

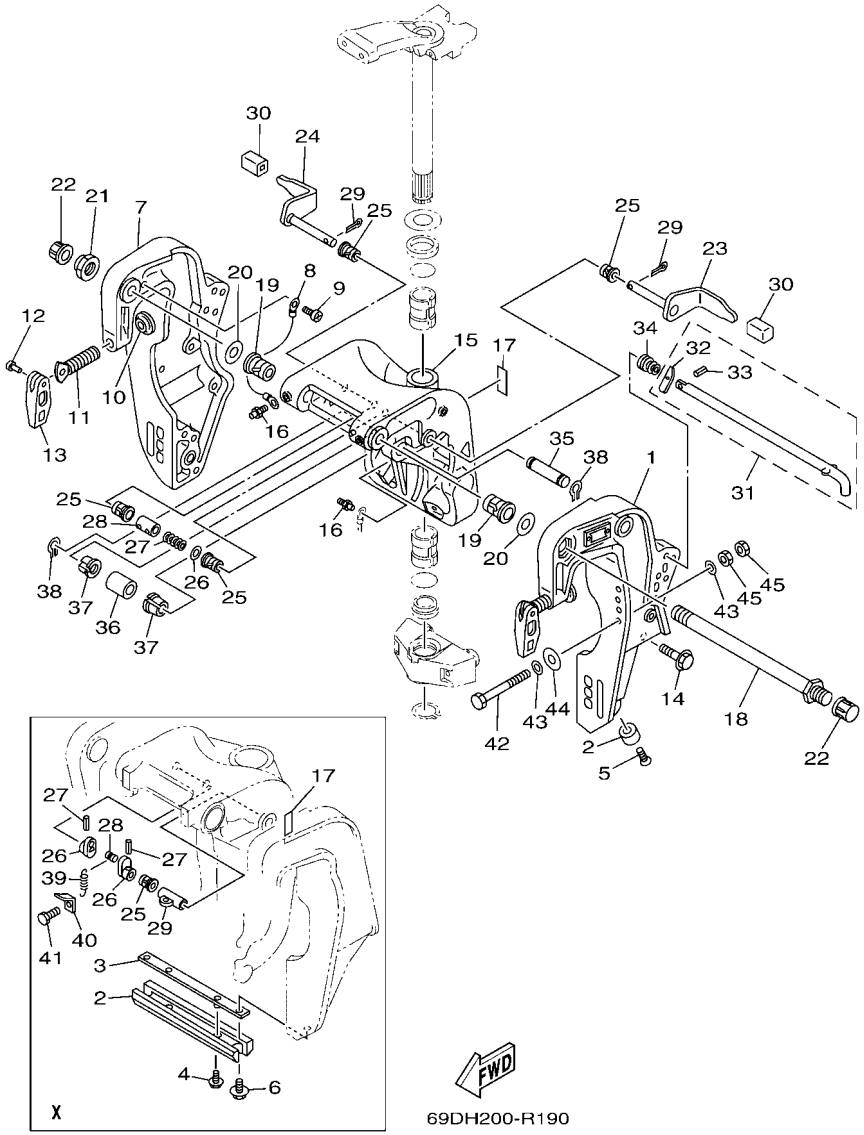

FIG. 19 BRACKET 1 — SOPORTE 1

REF. NO.	PART NO. CODIGO Nº	DESCRIPTION DESCRIPCION	MHD	WHD	WD			REMARKS OBSERVACIONES
42	90101–12063	BOLT (L:105MM) TORNILLO (L:105MM)	4					
43	90201–12062	WASHER, PLATE ARANDELA PLANA	8					
44	90201–12426	WASHER, PLATE ARANDELA PLANA	4					
45	95380–12600	NUT TUERCA	8					

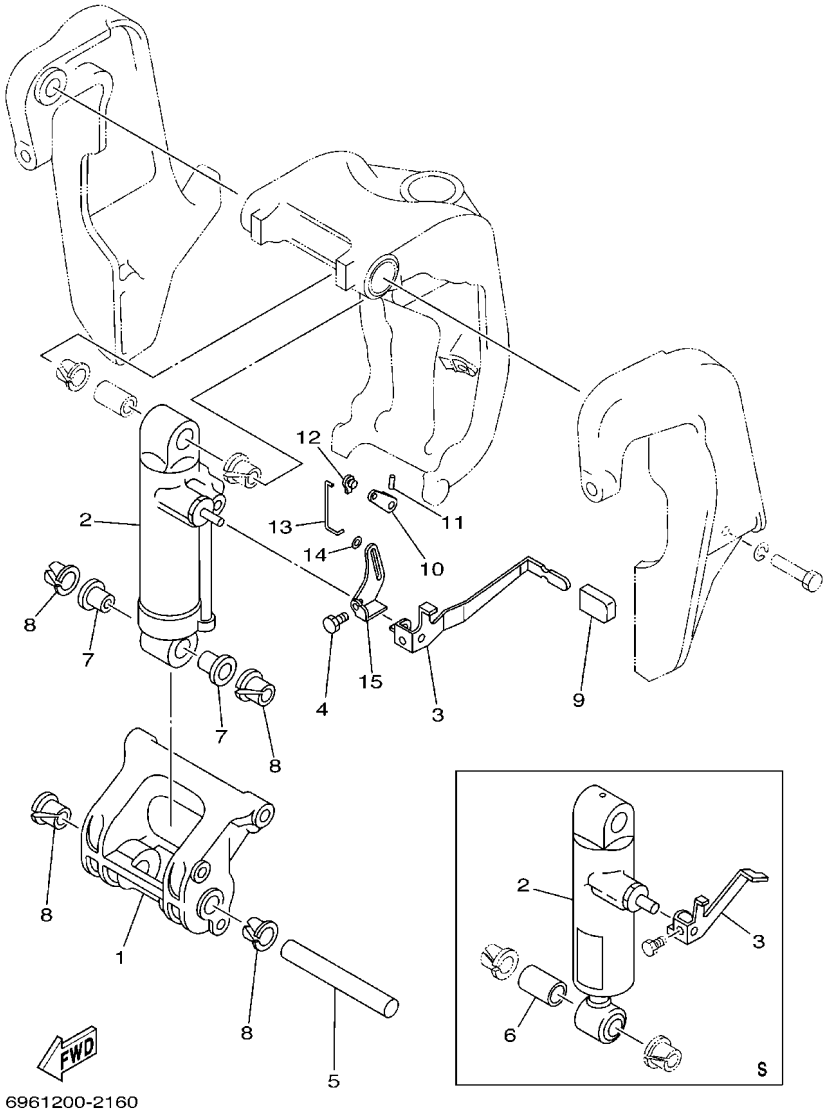

6961200-2160

FIG. 20 BRACKET 2 — SOPORTE 2

REF. NO.	PART NO. CODIGO Nº	DESCRIPTION DESCRIPCION	MHD	WHD	WD			REMARKS OBSERVACIONES
1	697–43128–01–8D	SPACER, CLAMP BRACKET ESPACIADOR ABRAZADERA SOPORTE	1					S(17.7") S(17.7")
	688–43128–01–8D	SPACER, CLAMP BRACKET ESPACIADOR ABRAZADERA SOPORTE	1					X(25.5") X(25.5")
2	697–43107–04–8D	SHOCK ABSORBER SUB-ASSY AMORTIGUADOR COMPL	1					S(17.7") S(17.7")
	688–43107–05–8D	SHOCK ABSORBER SUB-ASSY AMORTIGUADOR COMPL	1					X(25.5") X(25.5")
3	688–43631–00	LEVER, TILT PALANCA DE INCLINACION	1					S(17.7") S(17.7")
	688–43631–10	LEVER, TILT PALANCA DE INCLINACION	1					X(25.5") X(25.5")
4	97080–06010	BOLT PERNO	1					
5	688–43124–02	PIN, LOWER SHOCK MOUNT PASADOR DE AMORTIGUADOR INFERI	1					
6	90386–18M21	BUSH BUJE	1					S(17.7") S(17.7")
7	90386–18M63	BUSH BUJE	2					X(25.5") X(25.5")
8	90386–18M35	BUSH BUJE	4					
9	682–43318–01	COVER CUBIERTA	1					X(25.5") X(25.5")
10	688–43186–00	LEVER PALANCA	1					X(25.5") X(25.5")
11	91690–30020	PIN, SPRING PASADOR DE RESORTE	1					X(25.5") X(25.5")
12	6J8–41262–00	JOINT, CHOKE LEVER CONECTOR DE AHOGADOR	1					X(25.5") X(25.5")
13	688–43616–00	ROD, TILT LOCK VARILLA SEGURO DE INCLINACION	1					X(25.5") X(25.5")
14	90202–03M51	WASHER, PLATE ARANDELA DE PLANA	1					X(25.5") X(25.5")
15	688–43651–00	LEVER, REVERSE LOCK 1 PALANCA SEGURO DE RESERVA	1					X(25.5") X(25.5")

FIG. 21 BRACKET 3 — SOPORTE 3

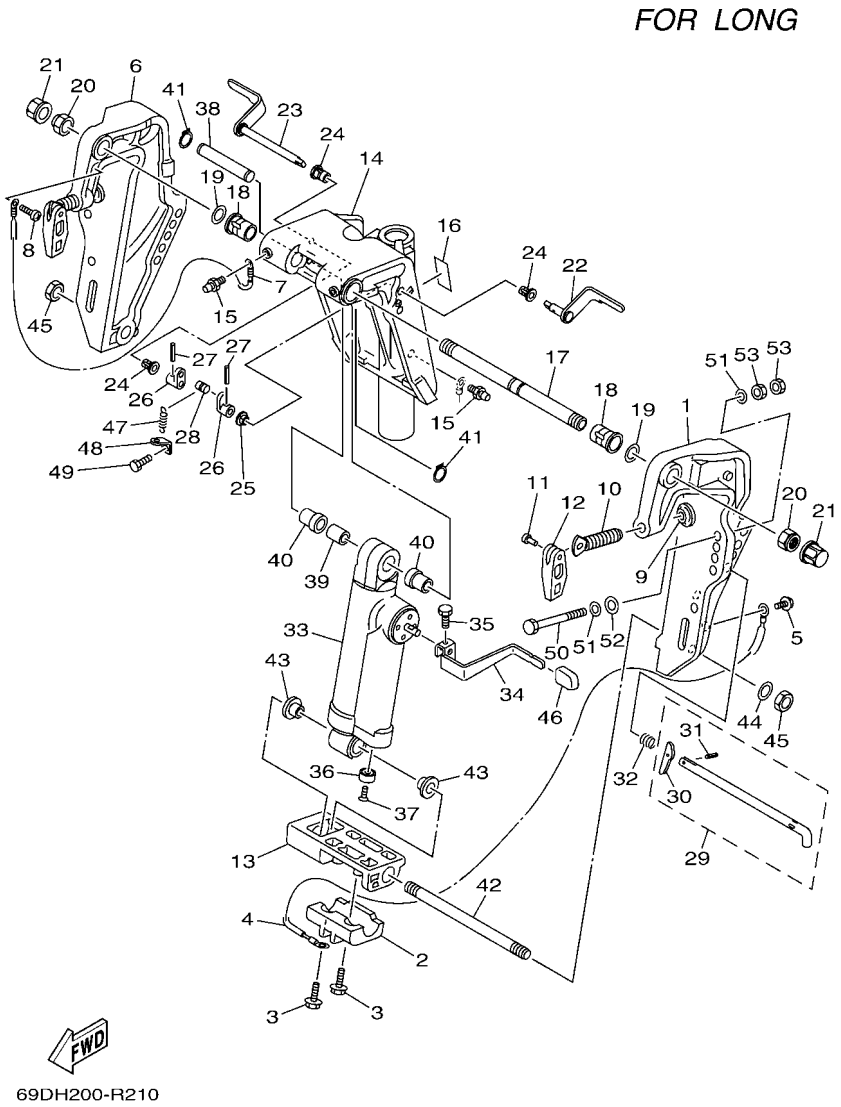

REF. NO.	PART NO. CODIGO Nº	DESCRIPTION DESCRIPCION	MHD	WHD	WD			REMARKS OBSERVACIONES
1	63D–43111–01–8D	BRACKET, CLAMP 1 SOPORTE DE LA ABRAZADERA 1	1	1	1			
2	63D–45251–01	ANODE CATODE	1	1	1			
3	97E95–06525	BOLT, HEXAGON W/W DEEP RECESS TORNILLO HEXAGONAL CON RONDONA	2	2	2			
4	6H1–82148–00	WIRE, LEAD 4 CABLE CONDUCTOR 4	1	1	1			
5	97E95–06510	BOLT, HEXAGON W/W DEEP RECESS TORNILLO HEXAGONAL CON RONDONA	1	1	1			
6	63D–43112–01–8D	BRACKET, CLAMP 2 SOPORTE DE LA ABRAZADERA 2	1	1	1			
7	63D–82148–00	WIRE, LEAD 4 CABLE CONDUCTOR 4	1	1	1			
8	97885–06008	SCREW, PAN HEAD TORNILLO A MUESCA	1	1	1			
9	648–43114–01	PAD, TRANSOM CLAMP ARANDELA DE ABRAZADERA	2	2	2			
10	663–43116–01	SCREW, TRANSOM CLAMP TORNILLO DE ABRAZADERA	2	2	2			
11	90243–04007	PIN PASADOR	2	2	2			
12	663–43118–01–8D	HANDLE, TRANSOM CLAMP MANIJA DE LA ABRAZADERA DEL ES	2	2	2			
13	63D–43128–01–8D	SPACER, CLAMP BRACKET ESPACIADOR ABRAZADERA SOPORTE	1	1	1			
14	69D–43311–11–8D	BRACKET, SWIVEL 1 SOPORTE GIRATORIO 1	1	1	1			
15	93700–06M03	NIPPLE, GREASE BOQUILLA DE ENGRASAR	3	3	3			
16	63D–43691–00	INDICATOR, TILT INDICADOR	1	1	1			
17	63D–43131–01	BOLT, CLAMP BRACKET TORNILLO DE ABRAZADERA DEL SOP	1	1	1			
18	90386–22M15	BUSH BUJE	2	2	2			
19	90201–22M03	WASHER, PLATE ARANDELA PLANA	2	2	2			
20	90185–22043	NUT, SELF-LOCKING TUERCA AUTOBLOCANTE	2	2	2			
21	6G5–43145–01	CAP, CLAMP BRACKET TAPA	2	2	2			
22	6H5–43181–03	LEVER, TILT STOP 1 PALANCA TOPE INCLINACION 1	1	1	1			
23	6H5–43185–03	LEVER, TILT STOP 2 PALANCA TOPE INCLINACION 2	1	1	1			
24	90386–10M16	BUSH BUJE	3	3	3			
25	90386–10025	BUSH BUJE	1	1	1			
26	6G5–43148–00	COLLAR, DISTANCE COLLAR	2	2	2			
27	91690–30020	PIN, SPRING PASADOR DE RESORTE	2	2	2			

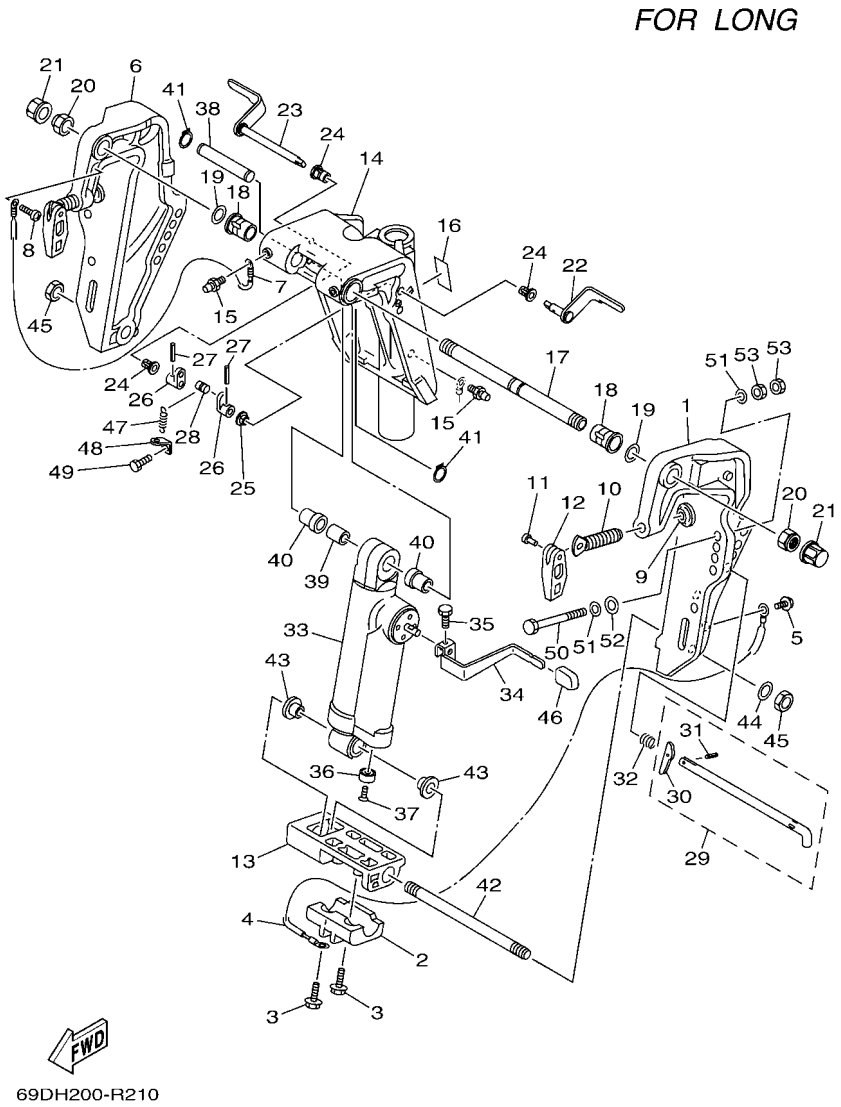

FIG. 21 BRACKET 3 — SOPORTE 3

REF. NO.	PART NO. CODIGO Nº	DESCRIPTION DESCRIPCION	MHD	WHD	WD			REMARKS OBSERVACIONES
28	90249–06M19	PIN PASADOR	1	1	1			
29	688–43160–01	TILT ROD ASSY VARILLA DE BASCULACION COMPL.	1	1	1			
30	688–43165–00	.PLATE, TILT LOCK .PLACA DE TOPE, VARILLA SEGURID	1	1	1			
31	91690–30012	.PIN, SPRING .PASADOR DE RESORTE	1	1	1			
32	90502–16M02	SPRING, CONICAL RESORTE CONICO	1	1	1			
33	69D–43107–12–8D	SHOCK ABSORBER SUB-ASSY AMORTIGUADOR COMPL	1	1	1			
34	69D–43631–00	LEVER, TILT PALANCA DE INCLINACION	1	1	1			
35	97D95–06010	BOLT, HEXAGON DEEP RECESS TORNILLO HEXAGONAL	1	1	1			
36	663–45251–00	ANODE CATODE	1	1	1			
37	90152–06M01	SCREW, COUNTERSUNK TORNILLO EMBUTIDO	1	1	1			
38	69D–43126–01	PIN, UPPER SHOCK MOUNT PASADOR DE AMORTIGUADOR SUPERI	1	1	1			
39	90387–16003	COLLAR ESPACIADOR	1	1	1			
40	90387–16004	COLLAR ESPACIADOR	2	2	2			
41	93410–16097	CIRCLIP SEGURO	2	2	2			
42	90116–18M52	BOLT, STUD ESPARRAGO	1	1	1			
43	90386–18M44	BUSH BUJE	2	2	2			
44	92995–18600	WASHER ARANDELA	1	1	1			
45	90170–18M10	NUT TUERCA	2	2	2			
46	682–43318–01	COVER CUBIERTA	1	1	1			
47	90506–14M24	SPRING, TENSION RESORTE DE TENSION	1	1	1			
48	6G5–43144–00	HOOK, SPRING GANCHO	1	1	1			
49	97D95–06010	BOLT, HEXAGON DEEP RECESS TORNILLO HEXAGONAL	1	1	1			
50	90101–12063	BOLT (L:105MM) TORNILLO (L:105MM)	4	4	4			
51	90201–12062	WASHER, PLATE ARANDELA PLANA	8	8	8			
52	90201–12426	WASHER, PLATE ARANDELA PLANA	4	4	4			
53	95380–12600	NUT TUERCA	8	8	8			

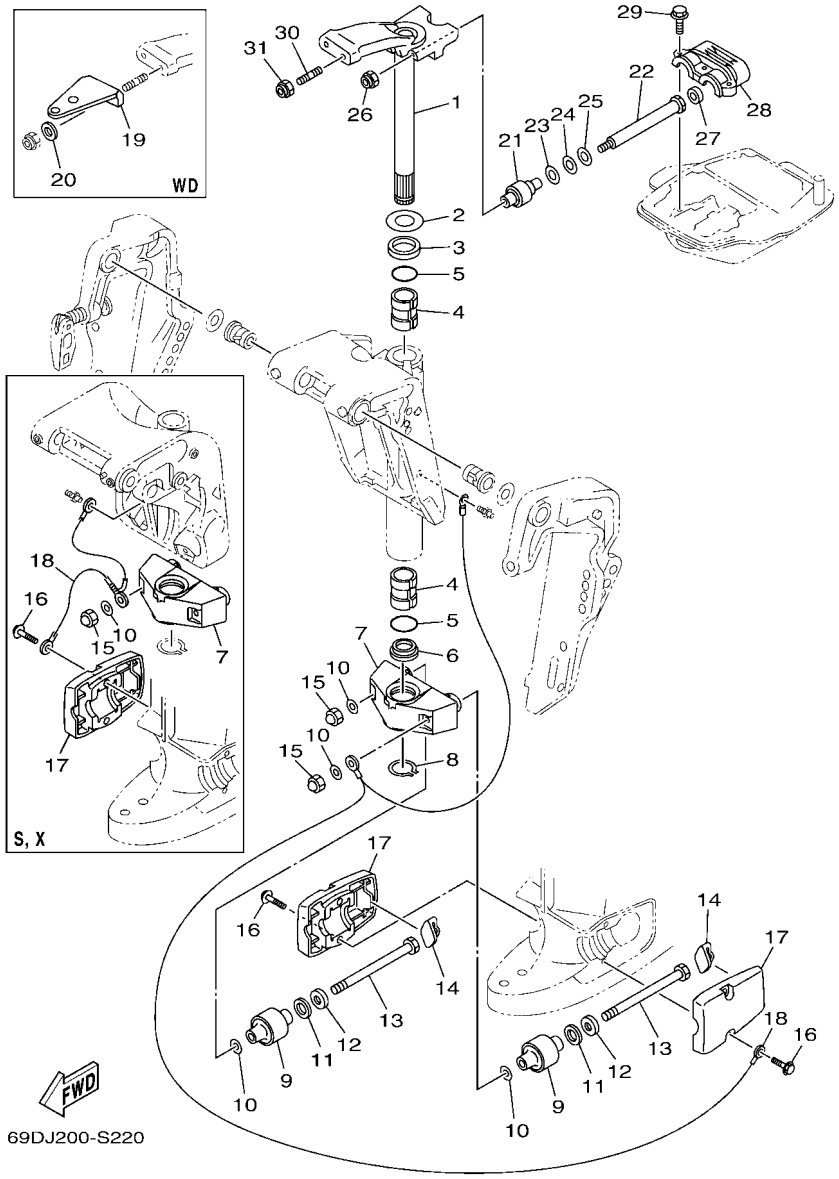

FIG. 22 BRACKET 4 — SOPORTE 4

REF. NO.	PART NO. CODIGO Nº	DESCRIPTION DESCRIPCION	MHD	WHD	WD			REMARKS OBSERVACIONES
1	6H3–42510–03–8D	STEERING BRACKET ASSY SOPORTE DIRECCION COMPL.	1					S(17.7") S(17.7")
	69D–42510–11–8D	STEERING BRACKET ASSY SOPORTE DIRECCION COMPL.	1	1	1			L(22.5"),X(25.5") L(22.5"),X(25.5")
2	90201–30M00	WASHER, PLATE ARANDELA PLANA	1	1	1			
3	90386–30M78	BUSH BUJE	1	1	1			
4	90386–30M77	BUSH BUJE	2	2	2			
5	93210–29M94	O-RING ANILLO O	2	2	2			
6	90386–30M60	BUSH BUJE	1	1	1			
7	6H3–44551–01–8D	HOUSING, LOWER MOUNT RUBBER 1 CAJA AMORTIGUADOR INFERIOR HU	1					S(17.7") S(17.7")
	69D–44551–11–8D	HOUSING, LOWER MOUNT RUBBER 1 CAJA AMORTIGUADOR INFERIOR HU	1	1	1			L(22.5"),X(25.5") L(22.5"),X(25.5")
8	93410–28M06	CIRCLIP SEGURO	1	1	1			
9	687–44555–00	MOUNT DAMPER, LOWER SIDE AMORTIGUADOR DE HULE LADO INFE	2	2	2			S(17.7"),L(22.5") S(17.7"),L(22.5")
	688–44555–00	MOUNT DAMPER, LOWER SIDE AMORTIGUADOR DE HULE LADO INFE	2					X(25.5") X(25.5")
10	90201–12M16	WASHER, PLATE ARANDELA PLANA	4	4	4			
11	90202–25M04	WASHER, PLATE ARANDELA DE PLANA	2	2	2			
12	90201–13M19	WASHER, PLATE ARANDELA PLANA	2	2	2			
13	90109–12M21	BOLT PERNO	2	2	2			
14	688–44575–00	DAMPER, LOWER MOUNT RUBBER AMORTIGUADOR INFERIOR	2	2	2			
15	95380–12800	NUT, CROWN TUERCA	2	2	2			
16	97E75–08540	BOLT, HEXAGON W/W DEEP RECESS TORNILLO HEXAGONAL CON RONDONA	4	4	4			
17	6H3–44553–10–8D	COVER, LOWER MOUNT CUBIERTA,AMORTIGUADOR INFERIOR	2	2	2			
18	6H1–82127–00	WIRE, LEAD 2 CABLE CONDUCTOR 2	1					S(17.7"),X(25.5") S(17.7"),X(25.5")
	69D–82127–00	WIRE, LEAD 2 CABLE CONDUCTOR 2	1	1	1			L(22.5") L(22.5")
19	6H3–48511–52	HOOK, STEERING GANCHO DIRECCION			1			STEERING GUIDE STEERING GUIDE
20	90201–10049	WASHER, PLATE ARANDELA PLANA			2			
21	688–44514–00	MOUNT DAMPER, UPPER SIDE AMORTIGUADOR LADO SUPERIOR	2	2	2			
22	90101–10041	BOLT TORNILLO	2	2	2			
23	90201–20M21	WASHER, PLATE ARANDELA PLANA	2	2	2			

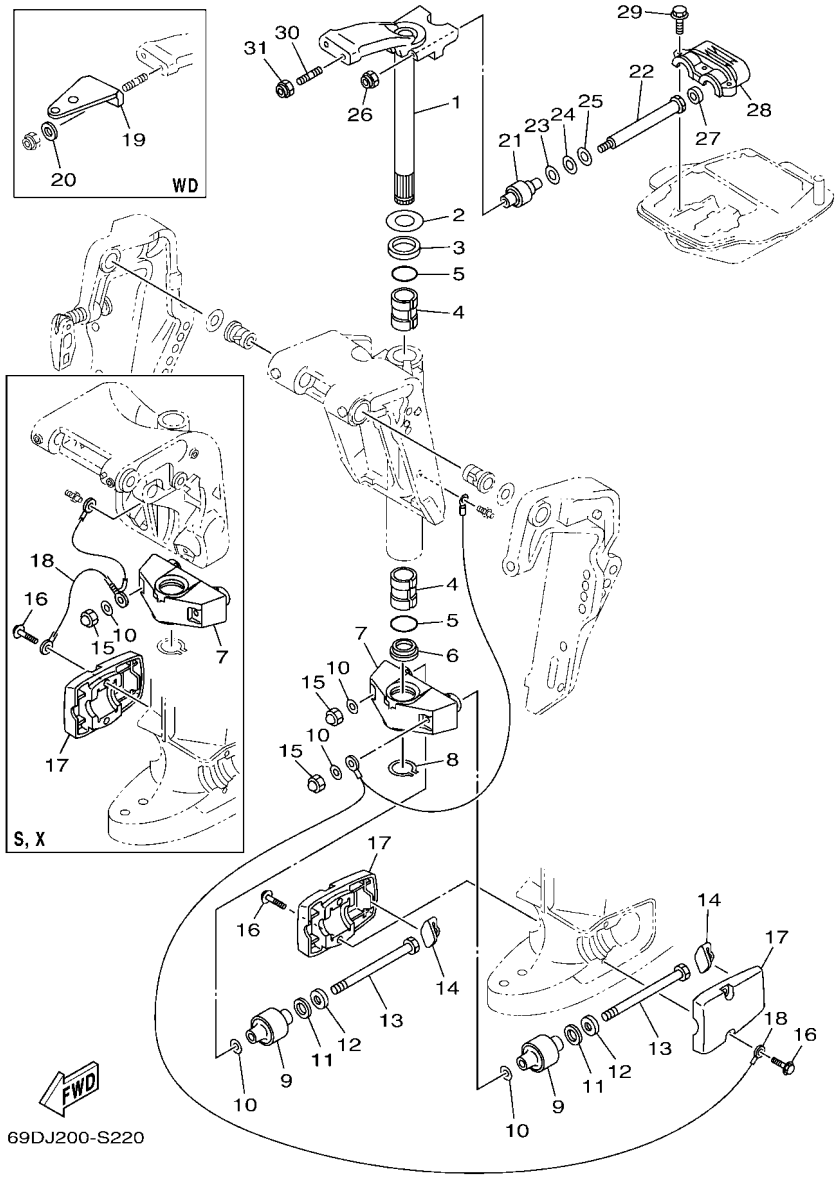

FIG. 22 BRACKET 4 — SOPORTE 4

REF. NO.	PART NO. CODIGO Nº	DESCRIPTION DESCRIPCION	MHD	WHD	WD			REMARKS OBSERVACIONES
24	90202–20M06	WASHER, PLATE ARANDELA DE PLANA	2	2	2			
25	90201–11M22	WASHER, PLATE ARANDELA PLANA	2	2	2			
26	90185–10027	NUT, SELF-LOCKING TUERCA AUTOBLOCANTE	2	2	2			
27	663–44575–00	DAMPER, LOWER MOUNT RUBBER AMORTIGUADOR INFERIOR	2	2	2			
28	688–44511–00	COVER, UPPER MOUNT CUBIERTA AMORTIGUADOR SUPERIOR	1	1	1			
29	97E75–08535	BOLT, HEXAGON W/W DEEP RECESS TORNILLO HEXAGONAL CON RONDONA	3	3	3			
30	90116–10063	BOLT, STUD ESPARRAGO	2	2	2			
31	90185–10027	NUT, SELF-LOCKING TUERCA AUTOBLOCANTE	2	2	2			

FIG. 23 UPPER CASING — FUNDA SUPERIOR

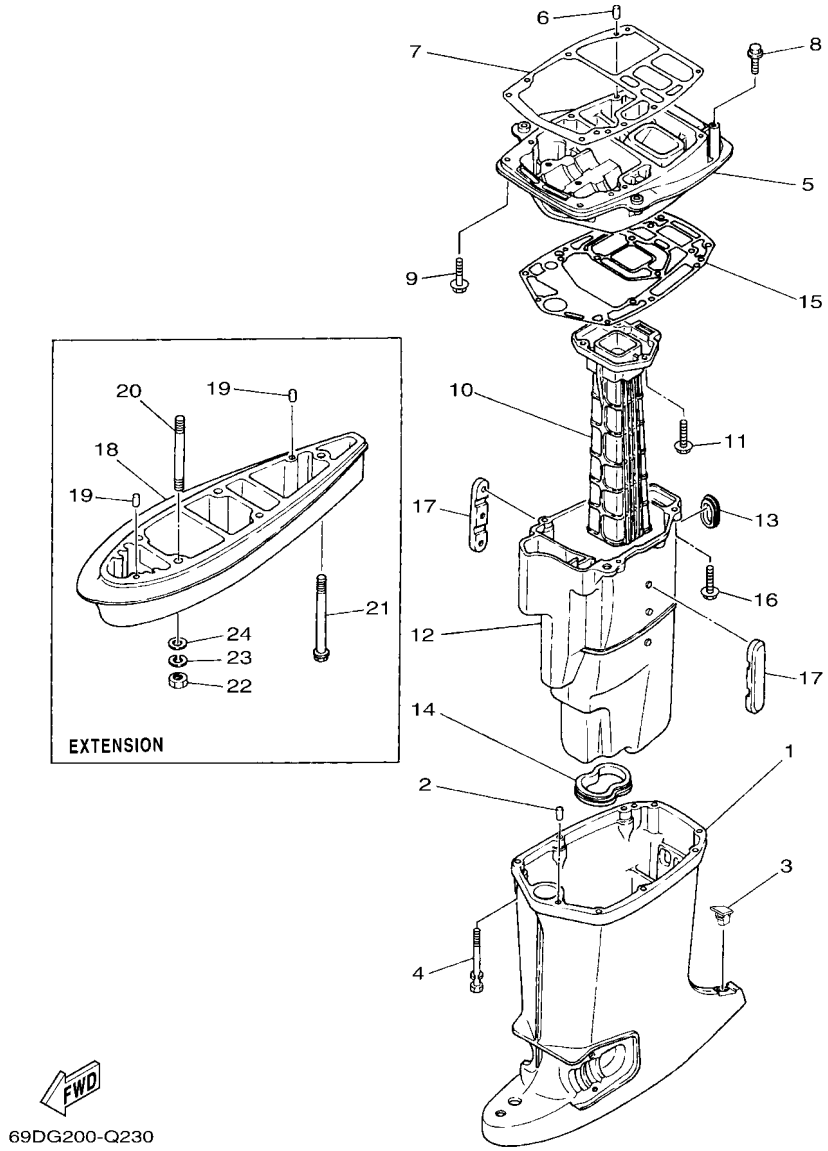

REF. NO.	PART NO. CODIGO Nº	DESCRIPTION DESCRIPCION	MHD	WHD	WD			REMARKS OBSERVACIONES
1	6H3–45111–01–8D	CASING, UPPER CAJA SUPERIOR	1					S(17.7") S(17.7")
	6H3–45111–12–8D	CASING, UPPER CAJA SUPERIOR	1	1	1			L(22.5"),X(25.5") L(22.5"),X(25.5")
2	93606–12019	PIN, DOWEL PASADOR DE CLAVIJA	2	2	2			
3	6C5–45155–00	CAP TAPA	1	1	1			
4	90119–08M81	BOLT, WITH WASHER TORNILLO CON ARANDELA	6	6	6			
5	6H3–41137–01–CA	GUIDE, EXHAUST GUIA DE ESCAPE	1	1	1			
6	93606–12019	PIN, DOWEL PASADOR DE CLAVIJA	2	2	2			
7	6H3–45113–A0	GASKET, UPPER CASING EMPAQUE	1	1	1			
8	97E75–08530	BOLT, HEXAGON W/W DEEP RECESS TORNILLO HEXAGONAL CON RONDONA	2	2	2			
9	97E75–08535	BOLT, HEXAGON W/W DEEP RECESS TORNILLO HEXAGONAL CON RONDONA	2	2	2			
10	6H2–41131–00–CA	MANIFOLD, EXT. 1 TUBO MULTIPLE DE ESCAPE	1	1	1			
	69D–41131–00–CA	MANIFOLD, EXT. 1 TUBO MULTIPLE DE ESCAPE		1				*1 *1
11	97E75–08530	BOLT, HEXAGON W/W DEEP RECESS TORNILLO HEXAGONAL CON RONDONA	3	3	3			
12	6H3–14711–01–CA	MUFFLER 1 SILENCIADOR 1	1					S(17.7") S(17.7")
	6H3–14711–11–CA	MUFFLER 1 SILENCIADOR 1	1	1	1			L(22.5"),X(25.5") L(22.5"),X(25.5")
	69D–14711–10–CA	MUFFLER 1 SILENCIADOR 1		1				L(22.5") *1 L(22.5") *1
13	6H3–45127–00	SEAL SELLO DE GOMA	1	1	1			
14	6H3–45123–00	GASKET, MUFFLER EMPAQUE SILENCIADOR	1	1	1			
15	6H3–45114–A1	GASKET, UPPER CASING EMPAQUE	1	1	1			
16	97E75–08530	BOLT, HEXAGON W/W DEEP RECESS TORNILLO HEXAGONAL CON RONDONA	4	4	4			
17	6H3–14737–00	DAMPER, MUFFLER AMORTIGUADOR DE SILENCIADOR	2					S(17.7") S(17.7")
	6H3–14737–10	DAMPER, MUFFLER AMORTIGUADOR DE SILENCIADOR	2	2	2			L(22.5"),X(25.5") L(22.5"),X(25.5")
18	696–45211–01–8D	EXTENSION EXTENSION	1	1	1			S(17.7"),L(22.5") S(17.7"),L(22.5")
	688–45211–01–8D	EXTENSION EXTENSION	1					X(25.5") X(25.5")
19	93606–12019	PIN, DOWEL PASADOR DE CLAVIJA	2	2	2			
20	90116–10M31	BOLT, STUD ESPARRAGO	4	4	4			S(17.7"),L(22.5") S(17.7"),L(22.5")
	90116–10M05	BOLT, STUD ESPARRAGO	4					X(25.5") X(25.5")

*1: EXCEPT FOR OMN,CHN,KOR,TWN,BRN,OTH

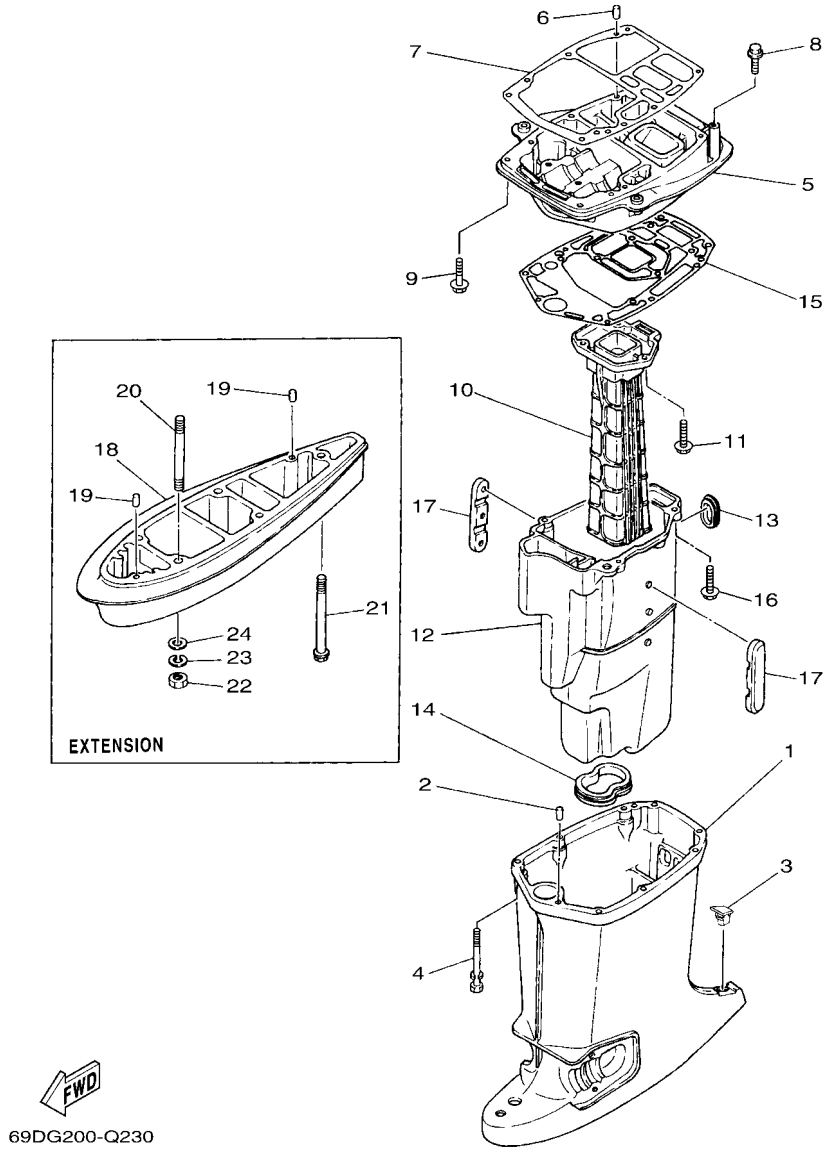

*1: EXCEPT FOR OMN,CHN,KOR,TWN,BRN,OTH

FIG. 23 UPPER CASING — FUNDA SUPERIOR

REF. NO.	PART NO. CODIGO Nº	DESCRIPTION DESCRIPCION	MHD	WHD	WD			REMARKS OBSERVACIONES
21	90119–08155	BOLT, WITH WASHER TORNILLO CON ARANDELA	1	1	1			S(17.7"),L(22.5") S(17.7"),L(22.5")
	90119–08158	BOLT, WITH WASHER TORNILLO CON ARANDELA	1					X(25.5") X(25.5")
22	95380–10600	NUT TUERCA	4	4	4			
23	92990–10100	WASHER, SPRING ARANDELA PLANA	4	4	4			
24	92995–10600	WASHER ARANDELA	4	4	4			

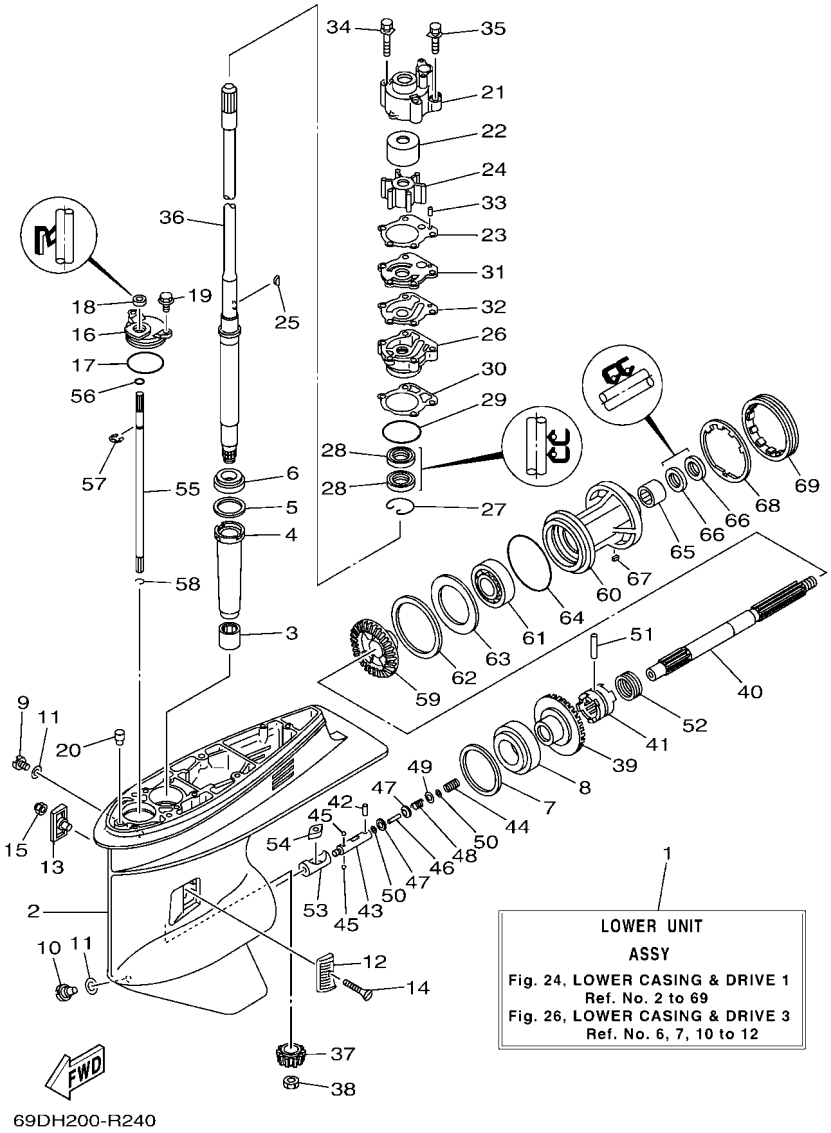

FIG. 24 LOWER CASING & DRIVE 1 — IMPULSOR E INFERIOR 1

REF. NO.	PART NO. CODIGO Nº	DESCRIPTION DESCRIPCION	MHD	WHD	WD			REMARKS OBSERVACIONES
1	69D–45300–02–8D	LOWER UNIT ASSY CONJUNTO UNIDAD INFERIOR	1					S(17.7") S(17.7")
	69D–45300–12–8D	LOWER UNIT ASSY CONJUNTO UNIDAD INFERIOR	1	1	1			L(22.5") L(22.5")
	69D–45300–22–8D	LOWER UNIT ASSY CONJUNTO UNIDAD INFERIOR	1					X(25.5") X(25.5")
2	6H1–45301–03–8D	CASING, LOWER FUNDA INFERIOR COMPLETA	1	1	1			
3	93315–325V1	BEARING COJINETE DE RODILLOS	1	1	1			
4	688–45536–01	SLEEVE, DRIVE SHAFT CAMISA EJE DE MANDO	1	1	1			
5	688–45587–01	SHIM (T:0.10MM) LAINA (T:0.10MM)	1	1	1			UR UR
	688–45587–10	SHIM (T:0.12MM) LAINA (T:0.12MM)	1	1	1			UR UR
	688–45587–20	SHIM (T:0.15MM) LAINA (T:0.15MM)	1	1	1			UR UR
	688–45587–30	SHIM (T:0.18MM) LAINA (T:0.18MM)	1	1	1			UR UR
	688–45587–40	SHIM (T:0.30MM) LAINA (T:0.30MM)	1	1	1			UR UR
	688–45587–50	SHIM (T:0.40MM) LAINA (T:0.40MM)	1	1	1			UR UR
	688–45587–60	SHIM (T:0.50MM) LAINA (T:0.50MM)	1	1	1			UR UR
6	93332–000U3	BEARING COJINETE	1	1	1			
7	688–45567–01	SHIM (T:0.10MM) LAINA (T:0.10MM)	1	1	1			UR UR
	688–45567–10	SHIM (T:0.12MM) LAINA (T:0.12MM)	1	1	1			UR UR
	688–45567–20	SHIM (T:0.15MM) LAINA (T:0.15MM)	1	1	1			UR UR
	688–45567–30	SHIM (T:0.18MM) LAINA (T:0.18MM)	1	1	1			UR UR
	688–45567–40	SHIM (T:0.30MM) LAINA (T:0.30MM)	1	1	1			UR UR
	688–45567–50	SHIM (T:0.40MM) LAINA (T:0.40MM)	1	1	1			UR UR
	688–45567–60	SHIM (T:0.50MM) LAINA (T:0.50MM)	1	1	1			UR UR
8	93332–000W7	BEARING COJINETE	1	1	1			
9	90340–08002	PLUG, STRAIGHT SCREW TORNILLO, DE DRENAJE	1	1	1			
10	688–45341–10	PLUG, DRAIN TAPON, DREN	1	1	1			
11	90430–08003	GASKET JUNTA	2	2	2			
12	6H1–45214–00	COVER, WATER INLET 1 CUBIERTA, ENTRADA AGUA 1	1	1	1			
13	6H1–45215–00	COVER, WATER INLET 2 CUBIERTA, ENTRADA AGUA 2	1	1	1			

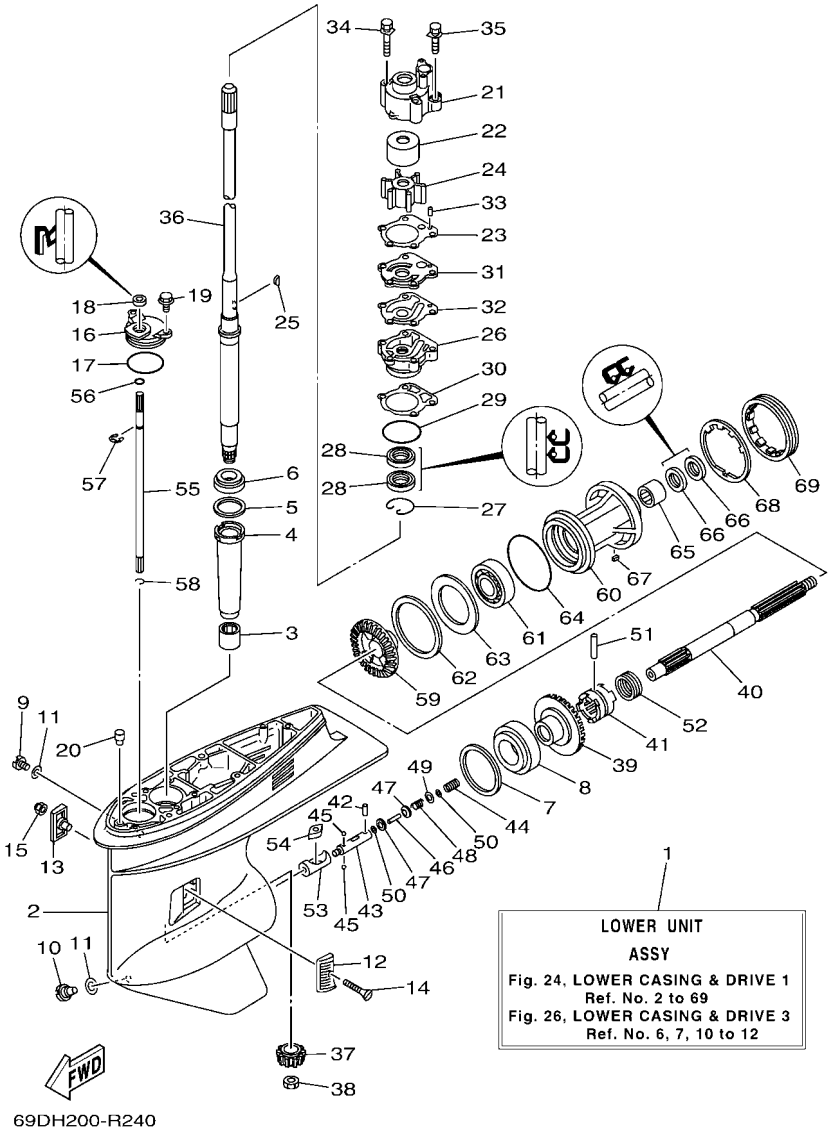

FIG. 24 LOWER CASING & DRIVE 1 — IMPULSOR E INFERIOR 1

REF. NO.	PART NO. CODIGO Nº	DESCRIPTION DESCRIPCION	MHD	WHD	WD			REMARKS OBSERVACIONES
14	90151–05M00	SCREW, COUNTERSUNK TORNILLO EMBUTIDO	1	1	1			
15	90185–05002	NUT, NYLON TUERCA AUTOBLOCANTE	1	1	1			
16	688–45321–00	PLATE PLACA	1	1	1			
17	93210–49046	O-RING ANILLO O	1	1	1			
18	93106–09014	OIL SEAL SELLO ACEITE	1	1	1			
19	97E95–06516	BOLT, HEXAGON W/W DEEP RECESS TORNILLO HEXAGONAL CON RONDONA	2	2	2			
20	6J8–45378–00	NIPPLE, HOSE (PLUG) NIPLE MANGUERA (TAPON)	1	1	1			
21	688–44311–01	HOUSING, WATER PUMP CAJA BOMBA DE AGUA	1	1	1			
22	69D–44322–00	INSERT, CARTRIDGE CARTUCHO	1	1	1			
23	688–44315–A0	GASKET, WATER PUMP EMPAQUE	1	1	1			
24	688–44352–03	IMPELLER IMPULSOR	1	1	1			
25	90280–04M04	KEY, WOODRUFF CUNA WOODRUFF	1	1	1			
26	6D8–44341–01–CA	HOUSING, WATER PUMP CAJA BOMBA DE AGUA	1	1	1			
27	93450–44166	CIRCLIP SEGURO	1	1	1			
28	93101–25M03	OIL SEAL SELLO ACEITE	2	2	2			
29	93210–46044	O-RING ANILLO O	1	1	1			
30	688–44316–A0	GASKET, WATER PUMP EMPAQUE	1	1	1			
31	688–44323–40	OUTER PLATE, CARTRIDGE PLACA EXTERIOR DEL CARTUCHO	1	1	1			
32	688–44324–A0	GASKET, CARTRIDGE EMPAQUE	1	1	1			
33	93604–10M03	PIN, DOWEL PASADOR DE CLAVIJA	2	2	2			
34	90119–08196	BOLT, WITH WASHER TORNILLO CON ARANDELA	2	2	2			
35	90119–08192	BOLT, WITH WASHER TORNILLO CON ARANDELA	2	2	2			
36	69D–45501–00	DRIVE SHAFT COMP. EJE DE MANDO COMPL.	1					S(17.7") S(17.7")
	69D–45501–10	DRIVE SHAFT COMP. EJE DE MANDO COMPL.	1	1	1			L(22.5") L(22.5")
	69D–45501–20	DRIVE SHAFT COMP. EJE DE MANDO COMPL.	1					X(25.5") X(25.5")
37	6K5–45551–00	PINION (12T) PINON (12T)	1	1	1			
38	90170–16M01	NUT TUERCA	1	1	1			

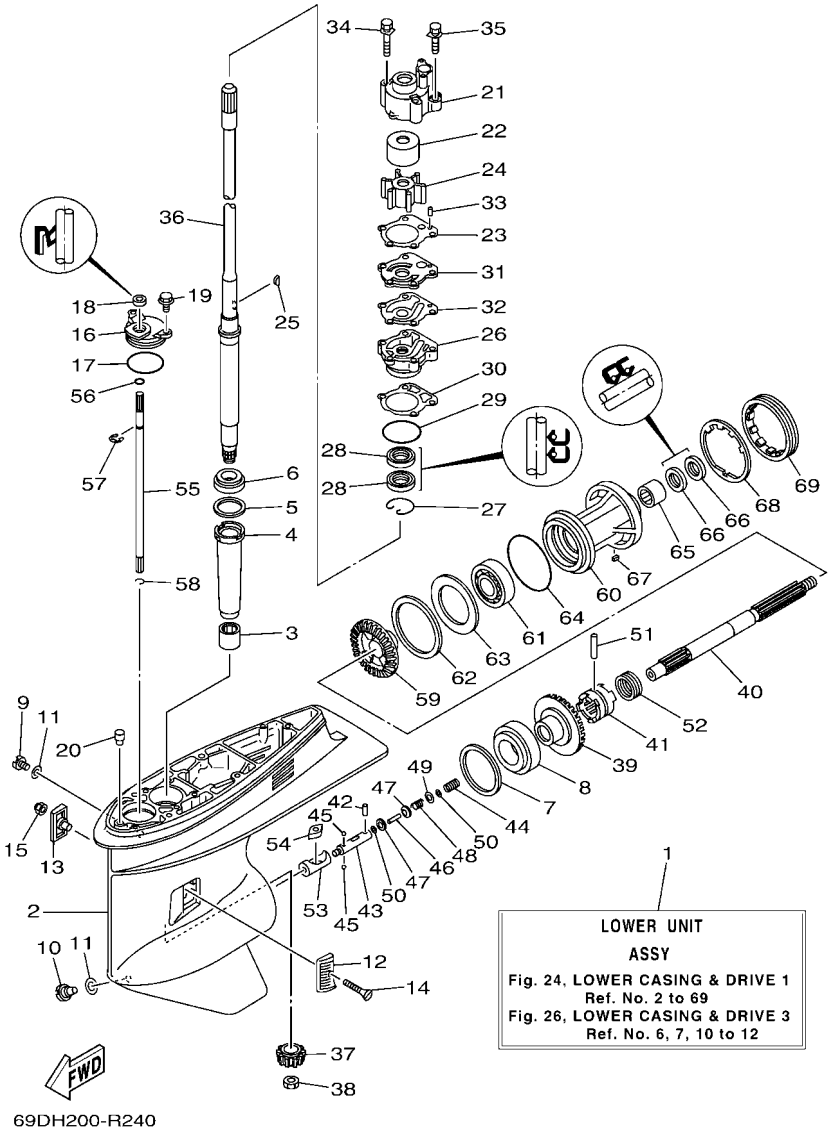

FIG. 24 LOWER CASING & DRIVE 1 — IMPULSOR E INFERIOR 1

REF. NO.	PART NO. CODIGO Nº	DESCRIPTION DESCRIPCION	MHD	WHD	WD			REMARKS OBSERVACIONES
39	6K5–45560–00	GEAR 1 (28T) ENGRANAJE 1 (28T)	1	1	1			
40	6H1–45611–01	SHAFT, PROPELLER EJE PROPUSOR	1	1	1			
41	6H1–45631–01	CLUTCH, DOG EMBRAGUE DE GARRA	1	1	1			
42	93603–12M11	PIN, DOWEL PASADOR DE CLAVIJA	1	1	1			
43	6H1–45634–02	SLIDE, SHIFT DESLIZADOR, CAMBIO	1	1	1			
44	90501–16M65	SPRING, COMPRESSION RESORTE DE COMPRESION	1	1	1			
45	93503–16003	BALL ESFERA	2	2	2			
46	6H1–45668–00	SHAFT, FREE 1 EJE 1	1	1	1			
47	6H1–45635–00	PLUNGER, SHIFT EMBOLO DE CAMBIO	2	2	2			
48	90501–12M48	SPRING, COMPRESSION RESORTE DE COMPRESION	1	1	1			
49	90201–03313	WASHER, PLATE ARANDELA PLANA	1	1	1			
50	90183–02M03	NUT, SPRING TUERCA DE RESORTE	2	2	2			
51	90250–07M02	PIN, STRAIGHT PASADOR CILINDRICO	1	1	1			
52	688–45633–00	RING, CROSS PIN ANILLO DE PASADOR	1	1	1			
53	6H1–45641–01	SHIFTER CAMBIO	1	1	1			
54	6H1–44151–00	CAM, SHIFT LEVA DE CAMBIO	1	1	1			
55	6H1–44144–00	ROD, SHIFT 2 VARILLA DE CAMBIO 2	1	1	1			
56	93210–07003	O-RING ANILLO O	1	1	1			
57	99001–08600	CIRCLIP PRESILLA REDONDA	1	1	1			
58	93450–07M00	CIRCLIP SEGURO	1	1	1			
59	6H3–45571–00	GEAR (28T) ENGRANAJE (28T)	1	1	1			
60	688–45331–00–CA	HOUSING, BEARING CAJA DE COJINETE	1	1	1			
61	93306–207U0	BEARING COJINETE	1	1	1			
62	688–45577–01	SHIM (T:0.10MM) LAINA (T:0.10MM)	1	1	1			UR UR
	688–45577–10	SHIM (T:0.12MM) LAINA (:0.12MM)	1	1	1			UR UR
	688–45577–20	SHIM (T:0.15MM) LAINA (T:0.15MM)	1	1	1			UR UR
	688–45577–30	SHIM (T:0.18MM) LAINA (T:0.18MM)	1	1	1			UR UR

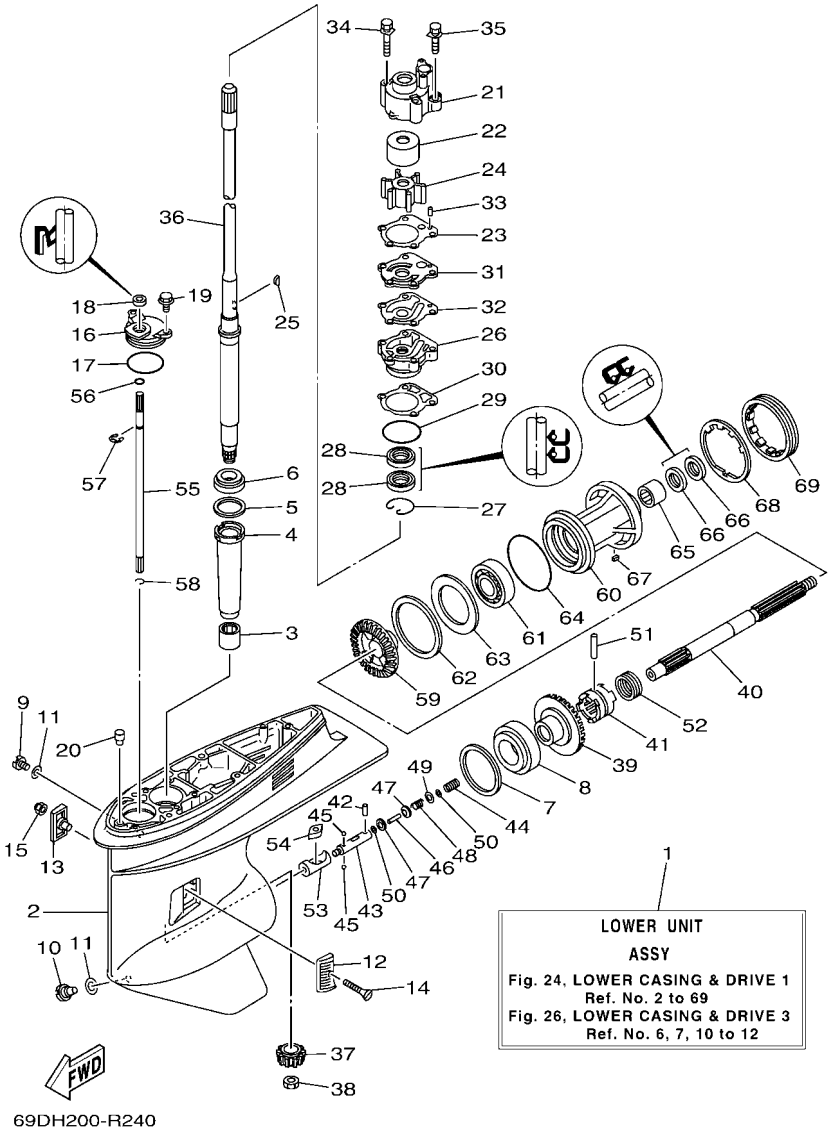

FIG. 24 LOWER CASING & DRIVE 1 — IMPULSOR E INFERIOR 1

REF. NO.	PART NO. CODIGO Nº	DESCRIPTION DESCRIPCION	MHD	WHD	WD			REMARKS OBSERVACIONES
62	688–45577–40	SHIM (T:0.30MM) LAINA (T:0.30MM)	1	1	1			UR UR
	688–45577–50	SHIM (T:0.40MM) LAINA (T:0.40MM)	1	1	1			UR UR
	688–45577–60	SHIM (T:0.50MM) LAINA (T:0.50MM)	1	1	1			UR UR
63	688–45576–00	WASHER, THRUST 2 ARANDELA DE EMPUJE AXIAL 2	1	1	1			
64	93210–85M97	O-RING ANILLO O	1	1	1			
65	93317–325U0	BEARING COJINETE	1	1	1			
66	93101–25M03	OIL SEAL SELLO ACEITE	2	2	2			
67	90282–04010	KEY, STRAIGHT CHAVETA, RECTA	1	1	1			
68	688–45383–02	WASHER, CLAW ARANDELA DE UNA	1	1	1			
69	688–45384–02	NUT TUERCA	1	1	1			

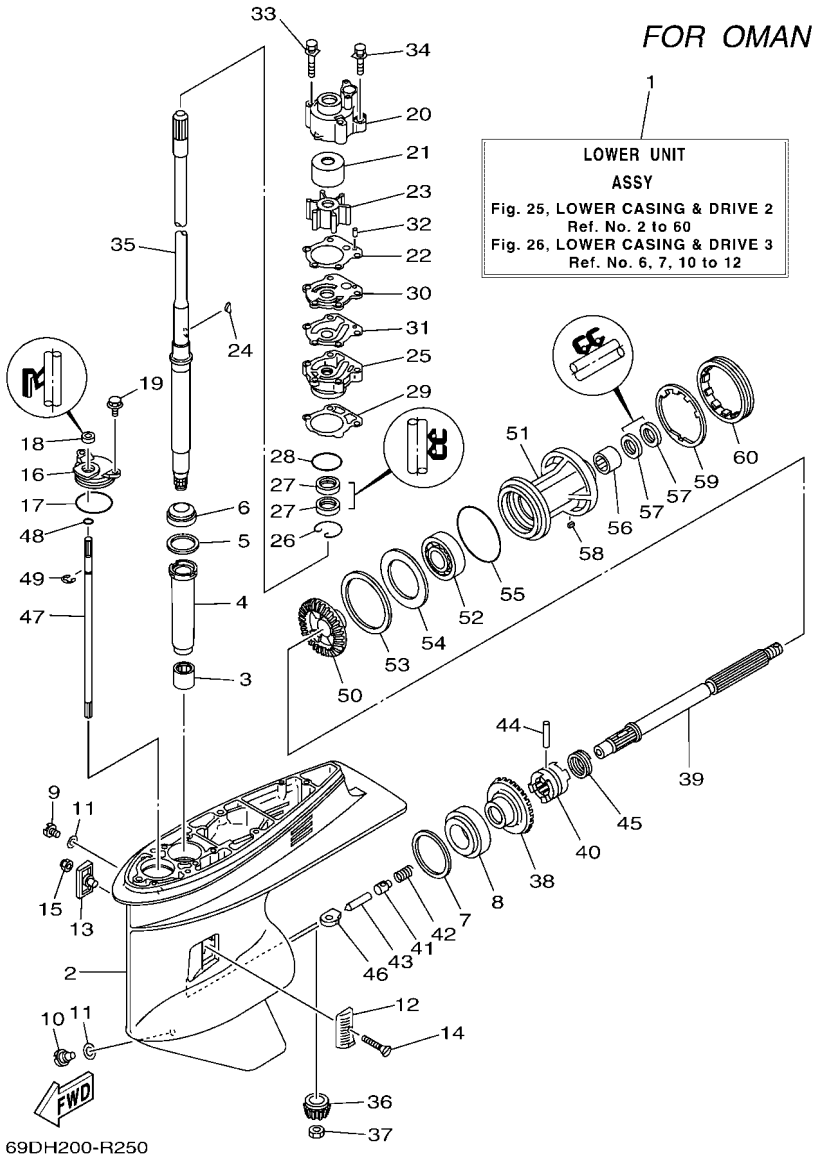

FIG. 25 LOWER CASING & DRIVE 2 — IMPULSOR E INFERIOR 2

REF. NO.	PART NO. CODIGO Nº	DESCRIPTION DESCRIPCION	MHD	WHD	WD			REMARKS OBSERVACIONES
1	69D–45300–42–8D	LOWER UNIT ASSY CONJUNTO UNIDAD INFERIOR	1	1				L(22.5") L(22.5")
2	688–45311–06–8D	CASING, LOWER FUNDA INFERIOR	1	1				
3	93315–325V1	BEARING COJINETE DE RODILLOS	1	1				
4	688–45536–01	SLEEVE, DRIVE SHAFT CAMISA EJE DE MANDO	1	1				
5	688–45587–01	SHIM (T:0.10MM) LAINA (T:0.10MM)	1	1				UR UR
	688–45587–10	SHIM (T:0.12MM) LAINA (T:0.12MM)	1	1				UR UR
	688–45587–20	SHIM (T:0.15MM) LAINA (T:0.15MM)	1	1				UR UR
	688–45587–30	SHIM (T:0.18MM) LAINA (T:0.18MM)	1	1				UR UR
	688–45587–40	SHIM (T:0.30MM) LAINA (T:0.30MM)	1	1				UR UR
	688–45587–50	SHIM (T:0.40MM) LAINA (T:0.40MM)	1	1				UR UR
	688–45587–60	SHIM (T:0.50MM) LAINA (T:0.50MM)	1	1				UR UR
6	93332–000U3	BEARING COJINETE	1	1				
7	688–45567–01	SHIM (T:0.10MM) LAINA (T:0.10MM)	1	1				UR UR
	688–45567–10	SHIM (T:0.12MM) LAINA (T:0.12MM)	1	1				UR UR
	688–45567–20	SHIM (T:0.15MM) LAINA (T:0.15MM)	1	1				UR UR
	688–45567–30	SHIM (T:0.18MM) LAINA (T:0.18MM)	1	1				UR UR
	688–45567–40	SHIM (T:0.30MM) LAINA (T:0.30MM)	1	1				UR UR
	688–45567–50	SHIM (T:0.40MM) LAINA (T:0.40MM)	1	1				UR UR
	688–45567–60	SHIM (T:0.50MM) LAINA (T:0.50MM)	1	1				UR UR
8	93332–000W7	BEARING COJINETE	1	1				
9	90340–08002	PLUG, STRAIGHT SCREW TORNILLO, DE DRENAJE	1	1				
10	688–45341–10	PLUG, DRAIN TAPON, DREN	1	1				
11	90430–08003	GASKET JUNTA	2	2				
12	6H1–45214–00	COVER, WATER INLET 1 CUBIERTA, ENTRADA AGUA 1	1	1				
13	6H1–45215–00	COVER, WATER INLET 2 CUBIERTA, ENTRADA AGUA 2	1	1				
14	90151–05M00	SCREW, COUNTERSUNK TORNILLO EMBUTIDO	1	1				
15	90185–05002	NUT, NYLON TUERCA AUTOBLOCANTE	1	1				

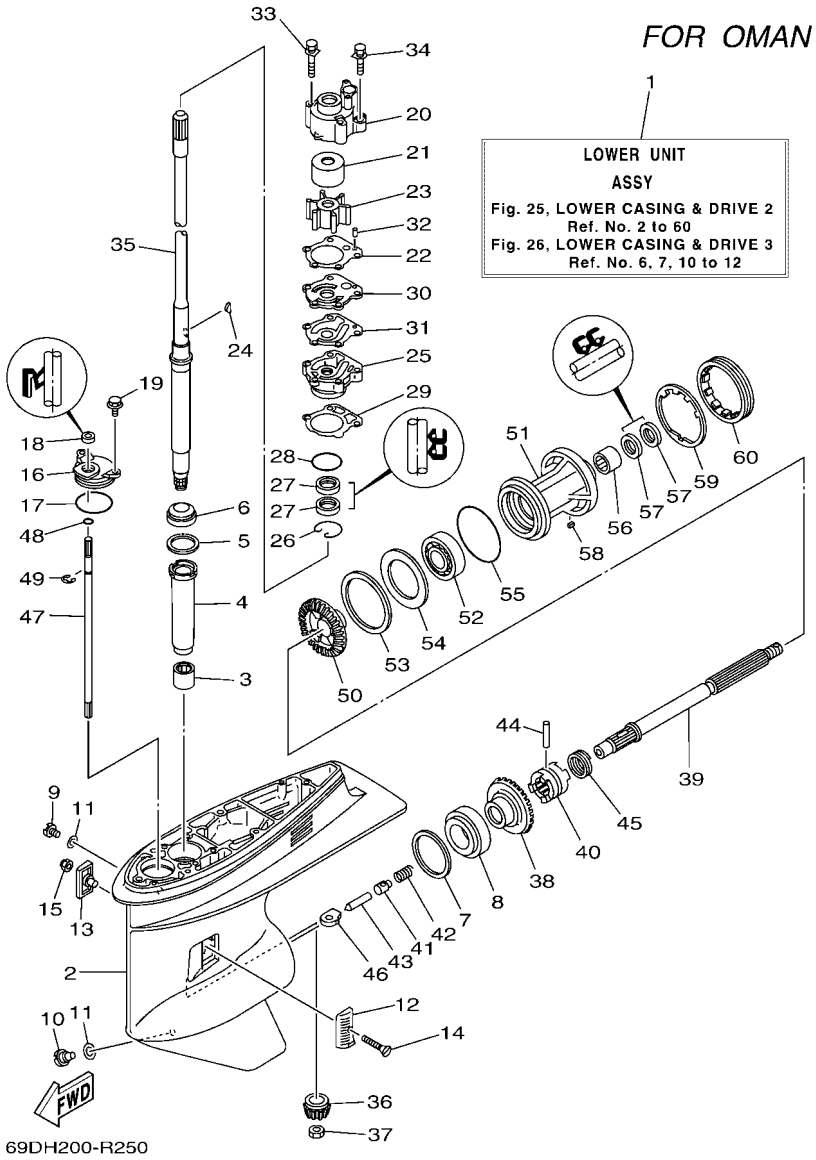

FIG. 25 LOWER CASING & DRIVE 2 — IMPULSOR E INFERIOR 2

REF. NO.	PART NO. CODIGO Nº	DESCRIPTION DESCRIPCION	MHD	WHD	WD			REMARKS OBSERVACIONES
16	688–45321–00	PLATE PLACA	1	1				
17	93210–49046	O-RING ANILLO O	1	1				
18	93106–09014	OIL SEAL SELLO ACEITE	1	1				
19	97E95–06516	BOLT, HEXAGON W/W DEEP RECESS TORNILLO HEXAGONAL CON RONDONA	2	2				
20	688–44311–01	HOUSING, WATER PUMP CAJA BOMBA DE AGUA	1	1				
21	69D–44322–00	INSERT, CARTRIDGE CARTUCHO	1	1				
22	688–44315–A0	GASKET, WATER PUMP EMPAQUE	1	1				
23	688–44352–03	IMPELLER IMPULSOR	1	1				
24	90280–04M04	KEY, WOODRUFF CUNA WOODRUFF	1	1				
25	6D8–44341–01–CA	HOUSING, WATER PUMP CAJA BOMBA DE AGUA	1	1				
26	93450–44166	CIRCLIP SEGURO	1	1				
27	93101–25M03	OIL SEAL SELLO ACEITE	2	2				
28	93210–46044	O-RING ANILLO O	1	1				
29	688–44316–A0	GASKET, WATER PUMP EMPAQUE	1	1				
30	688–44323–40	OUTER PLATE, CARTRIDGE PLACA EXTERIOR DEL CARTUCHO	1	1				
31	688–44324–A0	GASKET, CARTRIDGE EMPAQUE	1	1				
32	93604–10M03	PIN, DOWEL PASADOR DE CLAVIJA	2	2				
33	90119–08196	BOLT, WITH WASHER TORNILLO CON ARANDELA	2	2				
34	90119–08192	BOLT, WITH WASHER TORNILLO CON ARANDELA	2	2				
35	69D–45501–10	DRIVE SHAFT COMP. EJE DE MANDO COMPL.	1	1				L(22.5") L(22.5")
36	6K5–45551–00	PINION (12T) PINON (12T)	1	1				
37	90170–16M01	NUT TUERCA	1	1				
38	6K5–45560–00	GEAR 1 (28T) ENGRANAJE 1 (28T)	1	1				
39	688–45611–00	SHAFT, PROPELLER EJE PROPUSOR	1	1				
40	688–45631–01	CLUTCH, DOG EMBRAGUE DE GARRA	1	1				
41	688–45634–00	SLIDE, SHIFT DESLIZADOR, CAMBIO	1	1				
42	90501–16233	SPRING, COMPRESSION RESORTE DE COMPRESION	1	1				

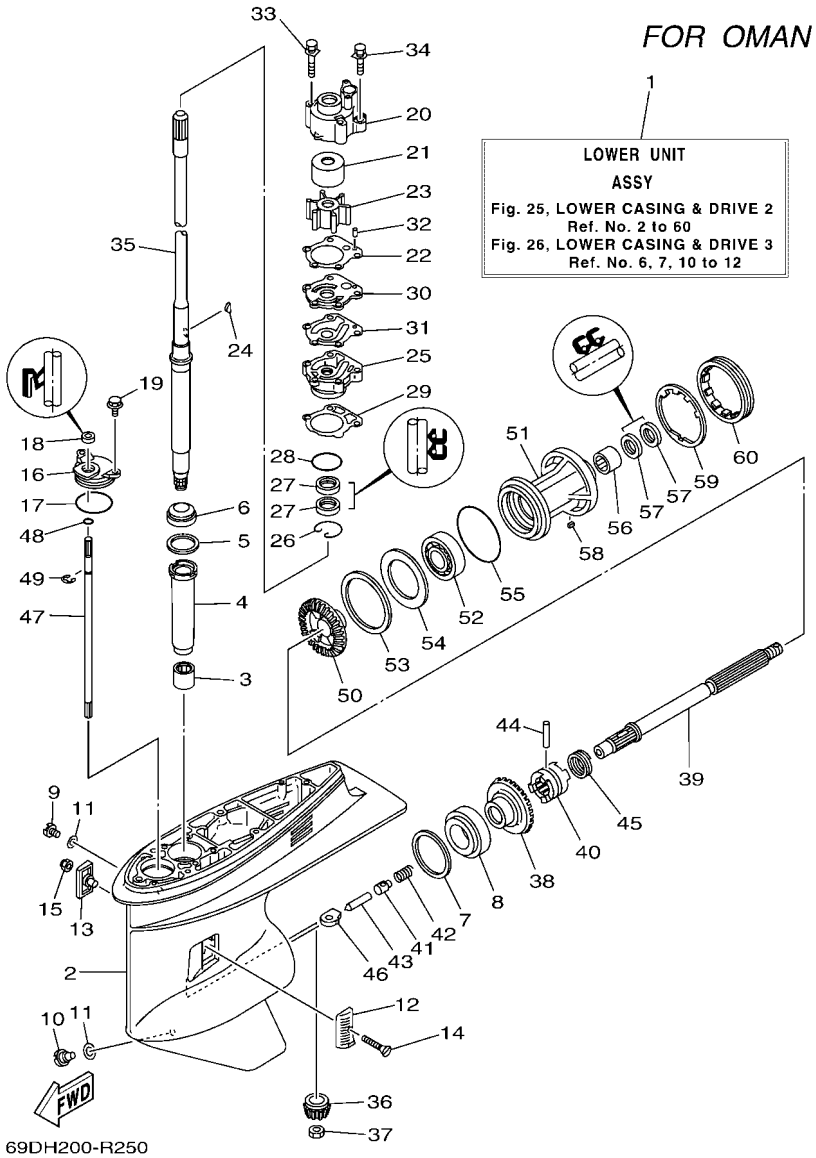

FIG. 25 LOWER CASING & DRIVE 2 — IMPULSOR E INFERIOR 2

REF. NO.	PART NO. CODIGO Nº	DESCRIPTION DESCRIPCION	MHD	WHD	WD			REMARKS OBSERVACIONES
43	688–45635–00	PLUNGER, SHIFT EMBOLO DE CAMBIO	1	1				
44	90250–07M02	PIN, STRAIGHT PASADOR CILINDRICO	1	1				
45	688–45633–00	RING, CROSS PIN ANILLO DE PASADOR	1	1				
46	663–44151–00	CAM, SHIFT LEVA DE CAMBIO	1	1				
47	6K5–44144–00	ROD, SHIFT 2 VARILLA DE CAMBIO 2	1	1				
48	93210–07003	O-RING ANILLO O	1	1				
49	99001–08600	CIRCLIP PRESILLA REDONDA	1	1				
50	6K5–45571–00	GEAR 2 (28T) ENGRANAJE 2 (28T)	1	1				
51	688–45331–00–CA	HOUSING, BEARING CAJA DE COJINETE	1	1				
52	93306–207U0	BEARING COJINETE	1	1				
53	688–45577–01	SHIM (T:0.10MM) LAINA (T:0.10MM)	1	1				UR UR
	688–45577–10	SHIM (T:0.12MM) LAINA (:0.12MM)	1	1				UR UR
	688–45577–20	SHIM (T:0.15MM) LAINA (T:0.15MM)	1	1				UR UR
	688–45577–30	SHIM (T:0.18MM) LAINA (T:0.18MM)	1	1				UR UR
	688–45577–40	SHIM (T:0.30MM) LAINA (T:0.30MM)	1	1				UR UR
	688–45577–50	SHIM (T:0.40MM) LAINA (T:0.40MM)	1	1				UR UR
	688–45577–60	SHIM (T:0.50MM) LAINA (T:0.50MM)	1	1				UR UR
54	688–45576–00	WASHER, THRUST 2 ARANDELA DE EMPUJE AXIAL 2	1	1				
55	93210–85M97	O-RING ANILLO O	1	1				
56	93317–325U0	BEARING COJINETE	1	1				
57	93101–25M03	OIL SEAL SELLO ACEITE	2	2				
58	90282–04010	KEY, STRAIGHT CHAVETA, RECTA	1	1				
59	688–45383–02	WASHER, CLAW ARANDELA DE UNA	1	1				
60	688–45384–02	NUT TUERCA	1	1				

FIG. 26 LOWER CASING & DRIVE 3 — IMPULSOR E INFERIOR 3

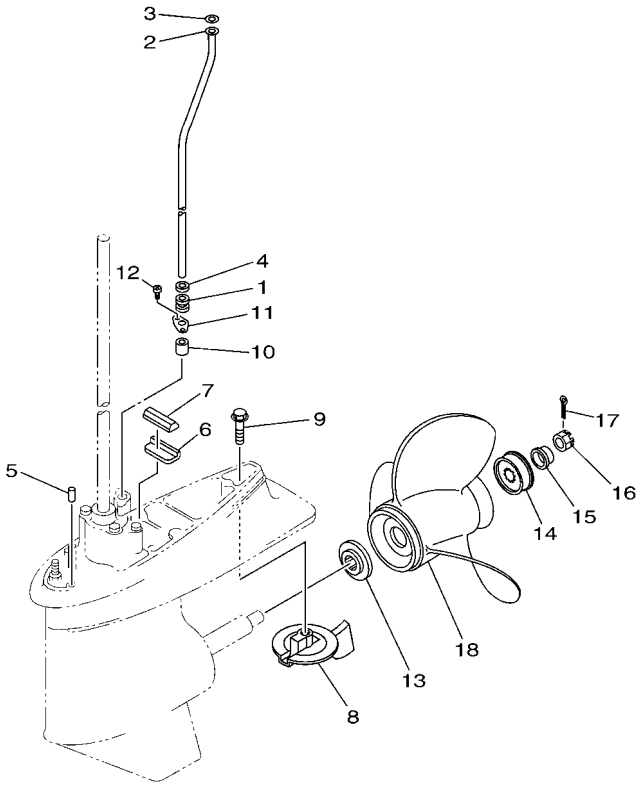

69DD700-M180

REF. NO.	PART NO. CODIGO Nº	DESCRIPTION DESCRIPCION	MHD	WHD	WD			REMARKS OBSERVACIONES
1	663–44367–00	DAMPER, WATER SEAL 3 GOMA DEL SELLO DE AGUA 3	1	1	1			
2	69D–44361–00	TUBE, WATER 1 TUBO DE AGUA 1	1					S(17.7") S(17.7")
	69D–44361–10	TUBE, WATER 1 TUBO DE AGUA 1	1	1	1			L(22.5") L(22.5")
	69D–44361–20	TUBE, WATER 1 TUBO DE AGUA 1	1					X(25.5") X(25.5")
3	90202–12060	WASHER, PLATE ARANDELA DE PLANA	1	1	1			
4	90430–12072	GASKET JUNTA	1	1	1			
5	93606–12019	PIN, DOWEL PASADOR DE CLAVIJA	2	2	2			
6	663–45376–00	GUIDE, SEAL DAMPER GUIA DE SELLO GOMA	1	1	1			
7	688–45375–00	DAMPER, SEAL GOMA DE SELLO	1	1	1			
8	67F–45371–00	TAB-TRIM QUILLA ESTABILIZADOR	1	1	1			
9	90105–10M67	BOLT, FLANGE TORNILLO	1	1	1			
10	663–44366–00	DAMPER, WATER SEAL 2 GOMA DEL SELLO DE AGUA 2	1	1	1			
11	90480–19M06	GROMMET TAPON	1	1	1			
12	90160–04006	SCREW, ROUND TAPPING TORNILLO REDONDO ROSCA HEMBRA	2	2	2			
13	688–45987–01	SPACER 1 ESPACIADOR 1	1	1	1			
14	67F–45997–00	SPACER 2 ESPACIADOR 2	1	1	1			
15	90389–25M00	BUSH BUJE	1	1	1			
16	90171–16011	NUT, CASTLE TUERCA ENTALLADA	1	1	1			
17	91490–30025	PIN. COTTER CHAVETA	1	1	1			
18	6E5–45954–00	PROPELLER (3X14"X11"-K) PROPELA (3X14"X11"-K)	1	1	1			UR UR
	6E5–45949–00	PROPELLER (3X13-5/8"X13"-K) PROPELA (3X13-5/8"X13"-K)	1	1	1			UR UR
	688–45932–60	PROPELLER (3X13-1/2"X14"-K) PROPELA (3X13-1/2"X14"-K)	1	1	1			UR UR
	6E5–45947–00	PROPELLER (3X13-1/2"X15"-K) PROPELA (3X13-1/2"X15"-K)	1	1	1			UR UR
	688–45978–60	PROPELLER (3X13-1/2"X16"-K) PROPELA (3X13-1/2"X16"-K)	1	1	1			UR UR
	688–45930–02	PROPELLER (3X13"X17"-K2) PROPELA (3X13"X17"-K2)	1	1	1			UR UR
	6E5–45945–01	PROPELLER (3X13-1/4"X17"-K) PROPELA (3X13-1/4"X17"-K)	1	1	1			UR UR
	6E5–45941–00	PROPELLER (3X13"X19"-K) PROPELA (3X13"X19"-K)	1	1	1			UR UR

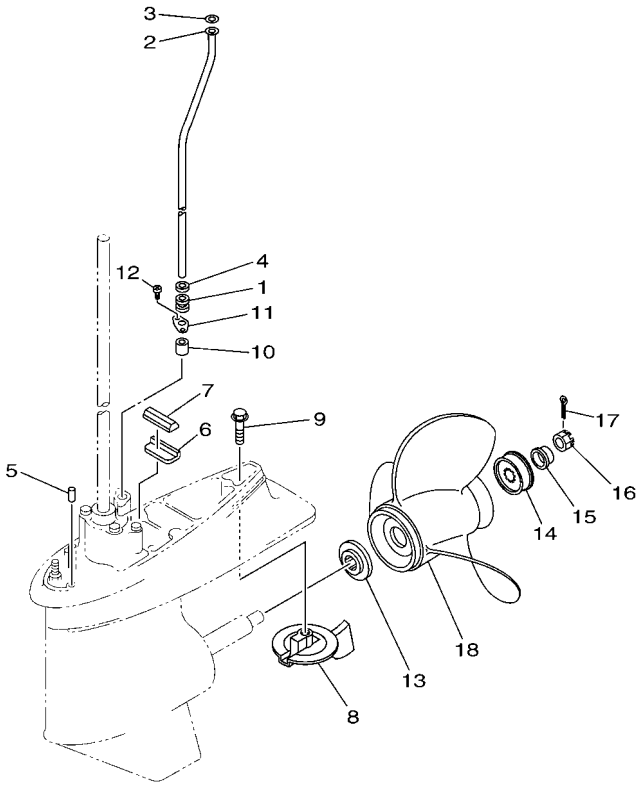

69DD700-M180

FIG. 26 LOWER CASING & DRIVE 3 — IMPULSOR E INFERIOR 3

REF. NO.	PART NO. CODIGO Nº	DESCRIPTION DESCRIPCION	MHD	WHD	WD			REMARKS OBSERVACIONES
18	688–45970–03	PROPELLER (3X13"X19"-K) PROPELA (3X13"X19"-K)	1	1	1			UR UR
	6E5–45943–00	PROPELLER (3X12-5/8"X21"-K) PROPELA (3X12-5/8"X21"-K)	1	1	1			UR UR
	688–45972–02	PROPELLER (3X13"X21"-K) PROPELA (3X13"X21"-K)	1	1	1			UR UR
	6E5–45952–00	PROPELLER (3X13"X23"-K) PROPELA (3X13"X23"-K)	1	1	1			UR UR
	688–45974–02	PROPELLER (3X13"X23"-K) PROPELA (3X13"X23"-K)	1	1	1			UR UR
	6E5–45956–00	PROPELLER (3X13"X25"-K) PROPELA (3X13"X25"-K)	1	1	1			UR UR
	688–45976–01	PROPELLER (3X13"X25"-K) PROPELA (3X13"X25"-K)	1	1	1			UR UR

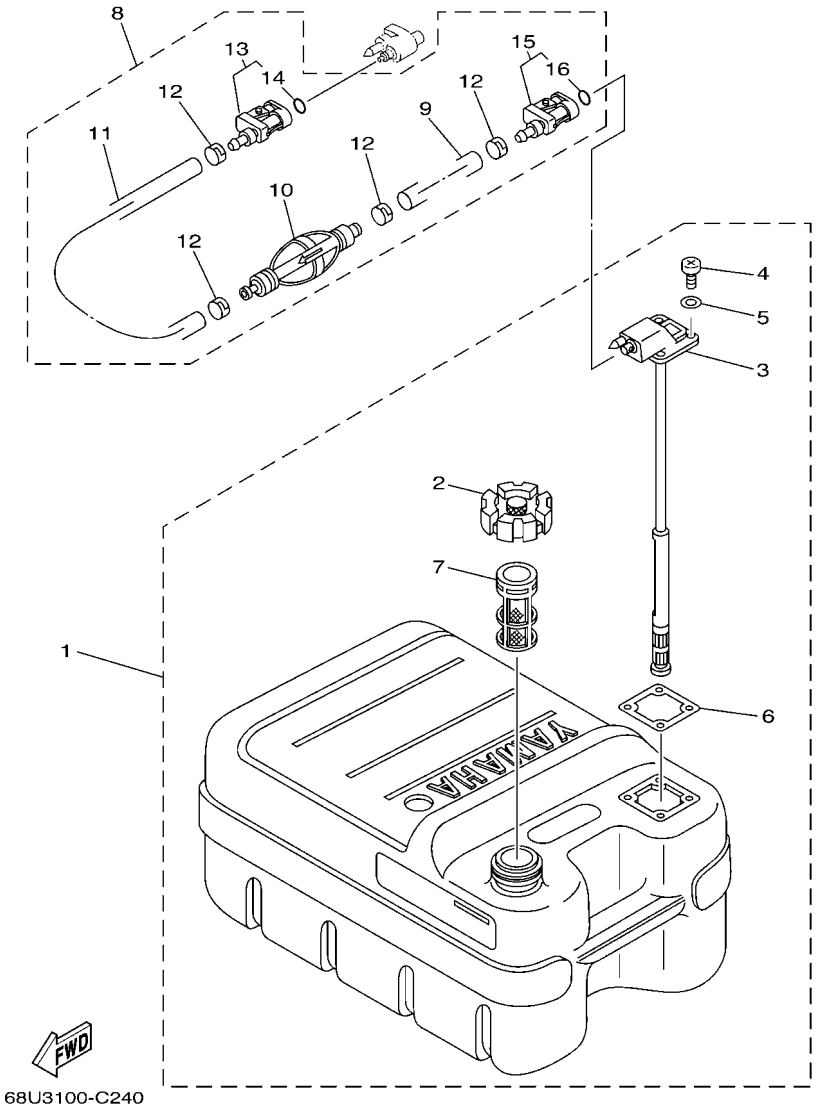

FIG. 27 FUEL TANK 1 — DEPOSITO DE COMBUSTIBLE 1

REF. NO.	PART NO. CODIGO Nº	DESCRIPTION DESCRIPCION	MHD	WHD	WD			REMARKS OBSERVACIONES
1	6YJ–24201–20	FUEL TANK ASSY (24L) TANQUE DEL COMBUSTIBLE (24L)	1	1	1			AP EXCEPT FOR TWN AP EXCEPT FOR TWN
2	6YJ–24610–01	.CAP ASSY .TAPA COMPLETA	1	1	1			
3	6YJ–24260–10	.FUEL METER ASSY .MEDIDOR DE COMBUSTIBLE COMPL.	1	1	1			
4	90157–05M19	.SCREW, PAN HEAD .TORNILLO CABEZA CONICA PLANA	4	4	4			
5	6Y1–24329–00	.SEAL .SELLO	4	4	4			
6	6Y1–24268–00	.GASKET, FUEL METER .EMPAQ MEDIDOR DE COMBUSTIBLE	1	1	1			
7	6YJ–24167–00	.STRAINER .COLADOR	1	1	1			
8	61J–24306–04	FUEL PIPE COMP. 1 TUBO COMBUST. COMPL 1	1	1	1			AP EXCEPT FOR TWN AP EXCEPT FOR TWN
9	90445–11M06	.HOSE (L2050) .MANGUERA (L2050)	1	1	1			
10	61J–24360–00	.PRIMER PUMP ASSY .SOPORTE BOMBA	1	1	1			
11	90445–11M05	.HOSE (L850) .MANGUERA (L850)	1	1	1			
12	650–24351–51	.BAND 1 .ABRAZADERA 1	4	4	4			
13	6G1–24305–05	.FUEL PIPE JOINT COMP. 2 .CONECTOR MANGUERA COMBUST. 2	1	1	1			
14	93210–08287	..O-RING ..ANILLO O	1	1	1			
15	6Y1–24305–06	.FUEL PIPE JOINT COMP. 2 .CONECTOR MANGUERA COMBUST. 2	1	1	1			
16	93210–08287	..O-RING ..ANILLO O	1	1	1			

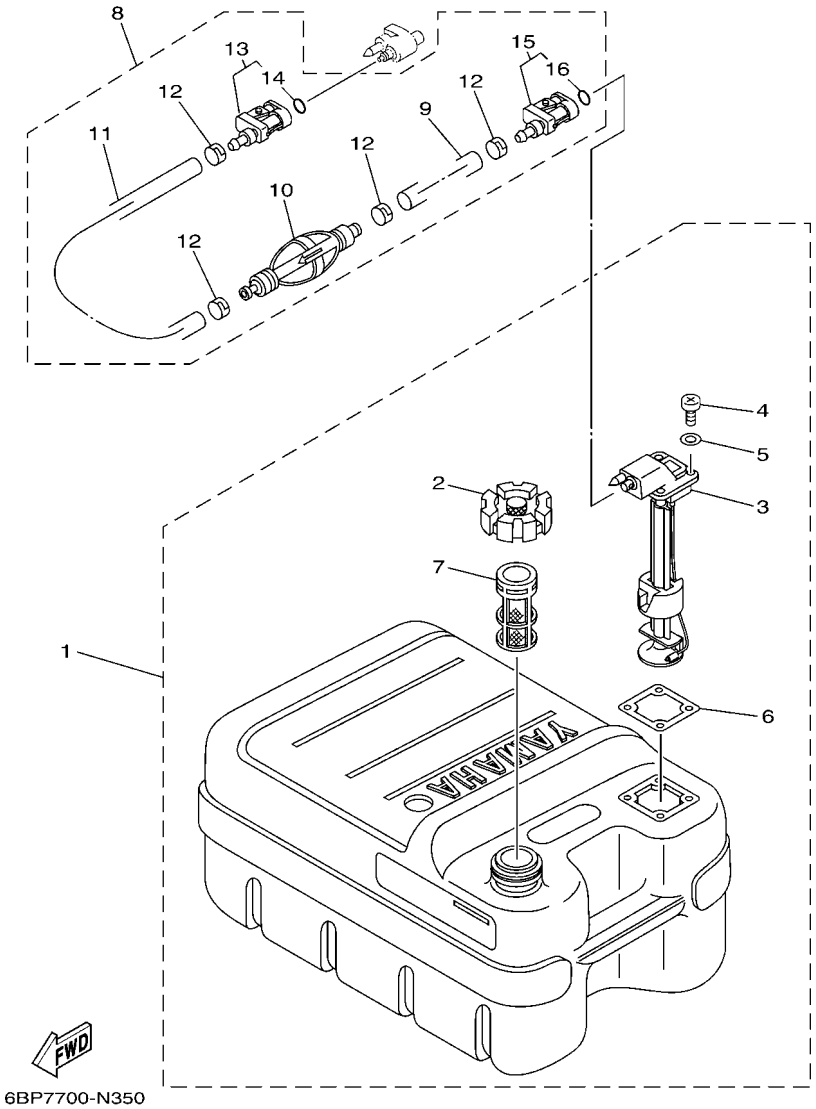

FIG. 28 FUEL TANK 2 — DEPOSITO DE COMBUSTIBLE 2

REF. NO.	PART NO. CODIGO Nº	DESCRIPTION DESCRIPCION	MHD	WHD	WD			REMARKS OBSERVACIONES
1	6YJ–24201–30	FUEL TANK ASSY (24L) TANQUE DEL COMBUSTIBLE (24L)		1				AP FOR TWN AP FOR TWN
2	6YJ–24610–01	.CAP ASSY .TAPA COMPLETA		1				
3	6Y1–24260–30	.FUEL METER ASSY .MEDIDOR DE COMBUSTIBLE COMPL.		1				WITH INDICATOR WITH INDICATOR
4	90157–05M19	.SCREW, PAN HEAD .TORNILLO CABEZA CONICA PLANA		4				
5	6Y1–24329–00	.SEAL .SELLO		4				
6	6Y1–24268–00	.GASKET, FUEL METER .EMPAQ MEDIDOR DE COMBUSTIBLE		1				
7	6YJ–24167–00	.STRAINER .COLADOR		1				
8	61J–24306–04	FUEL PIPE COMP. 1 TUBO COMBUST. COMPL 1		1				AP FOR TWN AP FOR TWN
9	90445–11M06	.HOSE (L2050) .MANGUERA (L2050)		1				
10	61J–24360–00	.PRIMER PUMP ASSY .SOPORTE BOMBA		1				
11	90445–11M05	.HOSE (L850) .MANGUERA (L850)		1				
12	650–24351–51	.BAND 1 .ABRAZADERA 1		4				
13	6G1–24305–05	.FUEL PIPE JOINT COMP. 2 .CONECTOR MANGUERA COMBUST. 2		1				
14	93210–08287	..O-RING ..ANILLO O		1				
15	6Y1–24305–06	.FUEL PIPE JOINT COMP. 2 .CONECTOR MANGUERA COMBUST. 2		1				
16	93210–08287	..O-RING ..ANILLO O		1				

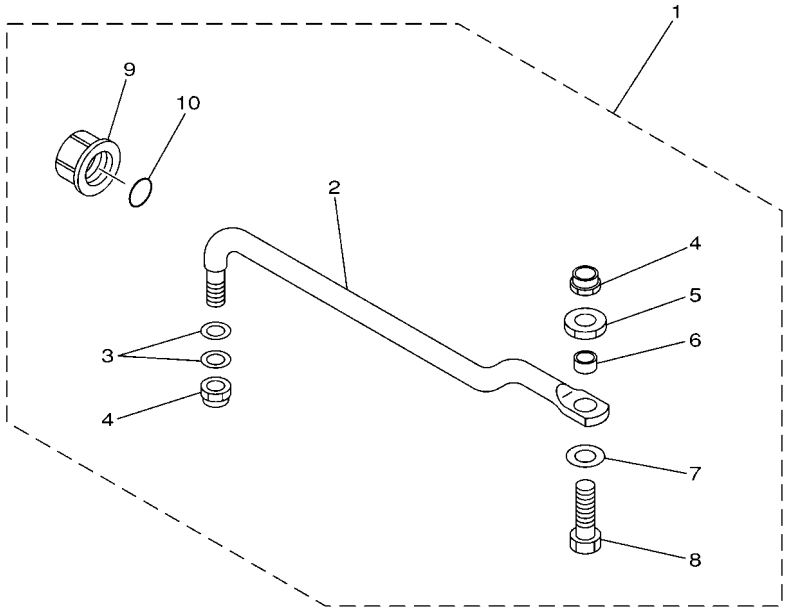

6880700-9190

FIG. 29 STEERING GUIDE DIRECCIONGUIAR

REF. NO.	PART NO. CODIGO Nº	DESCRIPTION DESCRIPCION	MHD	WHD	WD			REMARKS OBSERVACIONES
1	688–61350–10	STEERING GUIDE ATTACHMENT KIT ESTUCHE ADITAMENTO GUIA DE TIM			1			AP AP
2	688–61351–10	.ROD, STEERING LINK .VARILLA ESLABON DIRECCION			1			
3	90201–10M20	.WASHER, PLATE .ARANDELA PLANA			2			
4	90185–09M01	.NUT, SELF-LOCKING .TUERCA AUTOBLOCANTE			2			
5	90170–09M03	.NUT .TUERCA			1			
6	90387–10M42	.COLLAR .ESPACIADOR			1			
7	90201–10081	.WASHER, PLATE .ARANDELA PLANA			1			
8	6E5–61355–00	.BOLT .TORNILLO			1			
9	6E5–43145–01	.CAP, CLAMP BRACKET .TAPA			1			
10	93210–16275	.O-RING .ANILLO O			1			

FIG. 30 REMOTE CONTROL BOX — CONTROL REMOTO COMPLETO

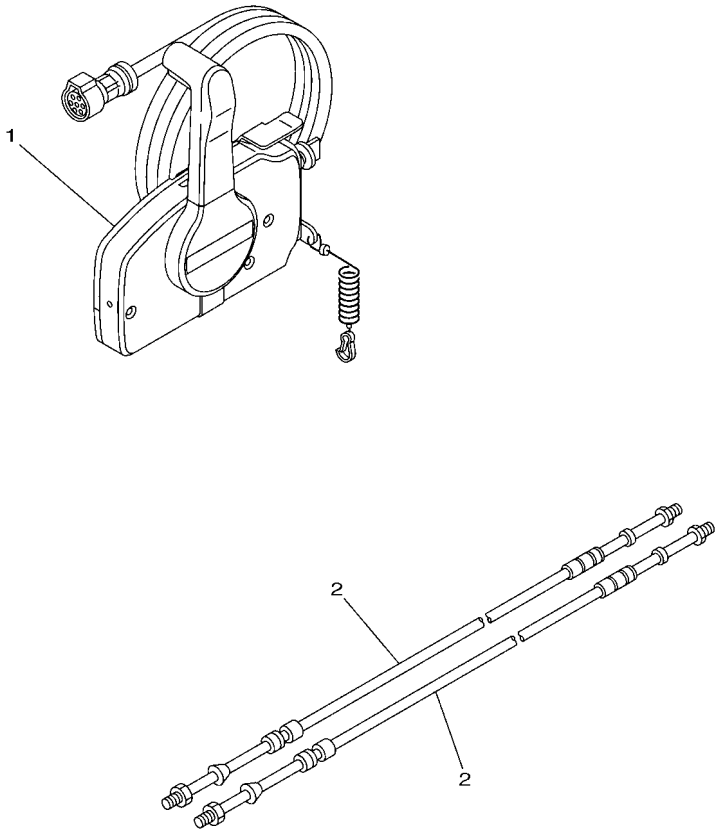

6DR3300-P300

REF. NO.	PART NO. CODIGO Nº	DESCRIPTION DESCRIPCION	MHD	WHD	WD			REMARKS OBSERVACIONES
1	703–48230–22	REMOTE CONTROL ASSY (7P) CONTROL REMOTO COMPL. (7P)			1			AP WITHOUT PT/T SW. AP WITHOUT PT/T SW.
2	701–48310–80	CABLE, REMOTE CONTROL L=10F CABLE CONTROL REMOTO L=10F			2			UR UR
	701–48320–20	CABLE, REMOTE CONTROL L=13F CABLE CONTROL REMOTO L=13F			2			UR UR
	701–48320–50	CABLE, REMOTE CONTROL L=15F CABLE CONTROL REMOTO L=15F			2			UR UR

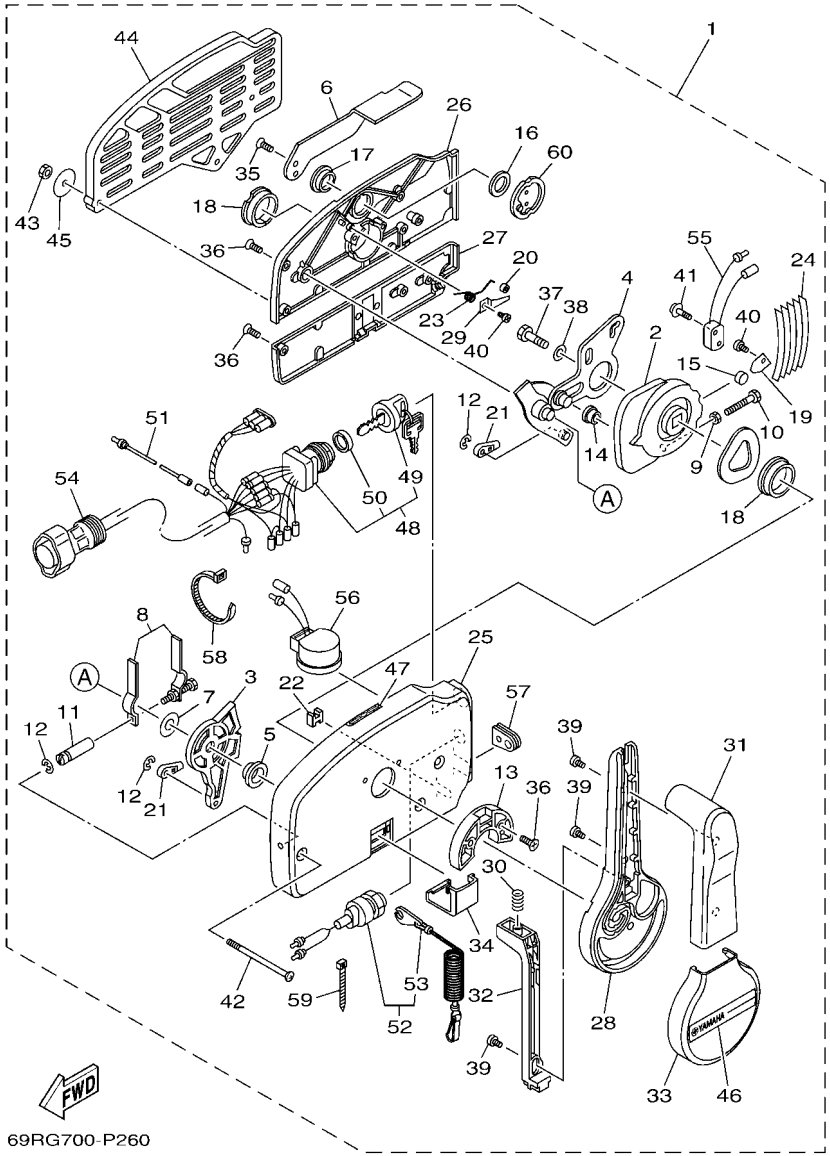

FIG. 31 REMOTE CONTROL ASSY — CONTROL REMOTO COMPL

REF. NO.	PART NO. CODIGO Nº	DESCRIPTION DESCRIPCION	MHD	WHD	WD			REMARKS OBSERVACIONES
1	703–48230–22	REMOTE CONTROL ASSY (7P) CONTROL REMOTO COMPL. (7P)			1			AP WITHOUT PT/T SW. AP WITHOUT PT/T SW.
2	703–48232–00	.GEAR .ENGRANAJE 1			1			
3	703–48271–00	.ARM, SHIFT .BRAZO CAMBIADOR			1			
4	703–48261–11	.ARM, THROTTLE .BRAZO ACELERADOR			1			
5	703–48235–00	.BUSHING .BUJE			1			
6	703–48152–10	.KNOB, FREE ACCEL. .PERILLA			1			
7	703–48268–00	.SPACER .ESPACIADOR 3			1			
8	703–48264–00	.FRICTION, THROTTLE .FRICCION DE ACELERADOR			1			
9	95380–05600	.NUT .TUERCA			1			
10	97380–05025	.BOLT .TORNILLO HEXAGONAL			1			
11	703–48265–10	.SHAFT, FRICTION .EJE FRICCION			1			
12	93430–06024	.CIRCLIP .SEGURO			3			
13	703–48245–00	.PLATE, LOCK .PLACA CERRADURA			1			
14	703–48252–00	.ROLLER, CAM .RODILLO LEVA			1			
15	701–48248–00	.ROLLER, FREE ACCEL. .RODILLO ACELERADOR LIBRE			1			
16	703–48198–00	.WASHER, WAVE .RONDANA ONDULADA 3			1			
17	703–48243–00	.BUSHING .BUJE 3			1			
18	703–48236–00	.BUSHING 1 .BUJE			2			
19	703–48189–00	.RETAINER .RETENEDOR			1			
20	703–48234–00	.ROLLER, DETENT .RODILLO			1			
21	703–48345–01	.CABLE END, REMOTE CONTROL 2 .TERMINAL CABLE DE CONTROL REMO			2			
22	703–48358–01	.ANCHOR, CABLE .ABRAZADERA CABLE			1			
23	703–48244–00	.SPRING, FREE ACCEL. .RESORTE ACELERADOR LIBRE			1			
24	703–48238–00	.SPRING, DETENT .RESORTE			5			
25	703–48211–10	.HOUSING,1 .CAJA			1			
26	703–48212–10	.BACK PLATE 1 .PLACA TRASERA 1			1			
27	703–48213–10	.BACK PLATE 2 .PLACA TRASERA 2			1			

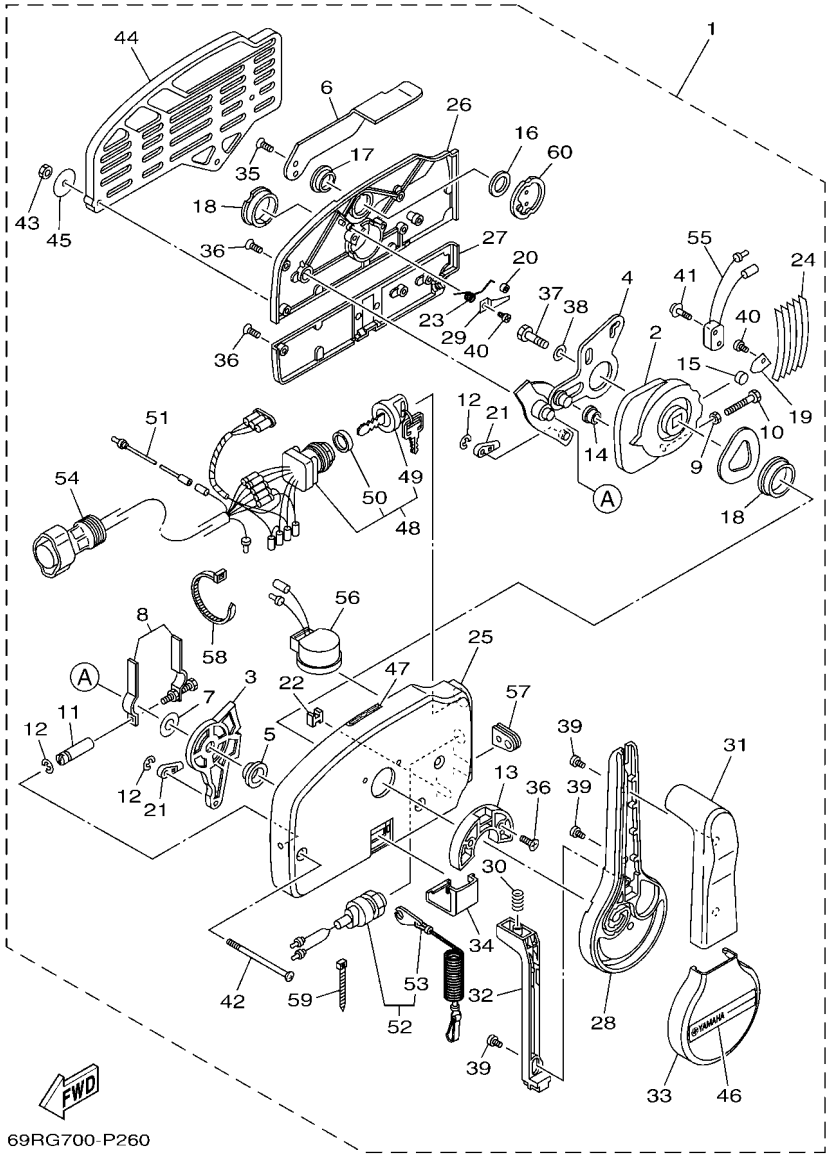

FIG. 31 REMOTE CONTROL ASSY — CONTROL REMOTO COMPL

REF. NO.	PART NO. CODIGO Nº	DESCRIPTION DESCRIPCION	MHD	WHD	WD			REMARKS OBSERVACIONES
28	703–48221–10	.LEVER, CONTROL .PALANCA CONTROL			1			
29	703–48246–00	.SPACER .ESPACIADOR			1			
30	703–48227–00	.SPRING, NEUTRAL LOCK .RESORTE DE SEGURO			1			
31	703–48222–30	.GRIP, CONTROL LEVER .MANGO DE PALANCA CONTROL			1			SINGLE SINGLE
32	703–48223–10	.LOCK, NEUTRAL .CERRADURA NEUTRO			1			
33	703–48225–10	.COVER .CUBIERTA			1			
34	703–48219–10	.COVER, LEAD .CUBIERTA			1			
35	703–48281–00	.SCREW .TORNILLO 1			2			
36	703–44189–20	.SCREW .TORNILLO			7			
37	97380–08030	.BOLT .TORNILLO HEXAGONAL			1			
38	92990–08600	.WASHER, PLATE .ARANDELA PLANA			1			
39	703–48128–10	.SCREW 2 .TORNILLO 2			3			
40	98580–04006	.SCREW, PAN HEAD .TORNILLO DE CABEZA CRUZADA			2			
41	703–48129–00	.SCREW 3 .TORNILLO 3			2			
42	703–44189–30	.SCREW .TORNILLO			3			
43	95380–06600	.NUT, HEXAGON .TUERCA			3			
44	703–48293–10	.SPACER, REMOTE CONTROL .ESPACIADOR			1			SINGLE SINGLE
45	701–48287–00	.WASHER .ARANDELA			3			
46	703–48215–11	.GRAPHIC .CALCOMANIA 1			1			
47	6X3–44191–00	.INDICATOR, SHIFT .INDICADOR DE CAMBIOS			1			
48	703–82510–34	.MAIN SWITCH ASSY .CONJUNTO DE LLAVE IGNICION			1			
49	703–82577–00	..CAP, KEY ..TAPA			1			
50	6K1–82532–00	..CAP ..TAPA			1			
51	703–82531–00	.WIRE, LEAD (L70) .CABLE CONDUCTOR (L70)			1			
52	688–82575–02	.ENGINE STOP SWITCH ASSY .INTERRUPTOR DE PARADA COMPL			1			
53	682–82556–00	..LANYARD, STOP SWITCH ..CORDON DE INTERRUPTOR PARADA			1			
54	688–82586–21	.EXTENSION, WIRE HARNESS (4.9M) .EXTENSION, ARNES DE CABLES (4.			1			(7P) (7P)

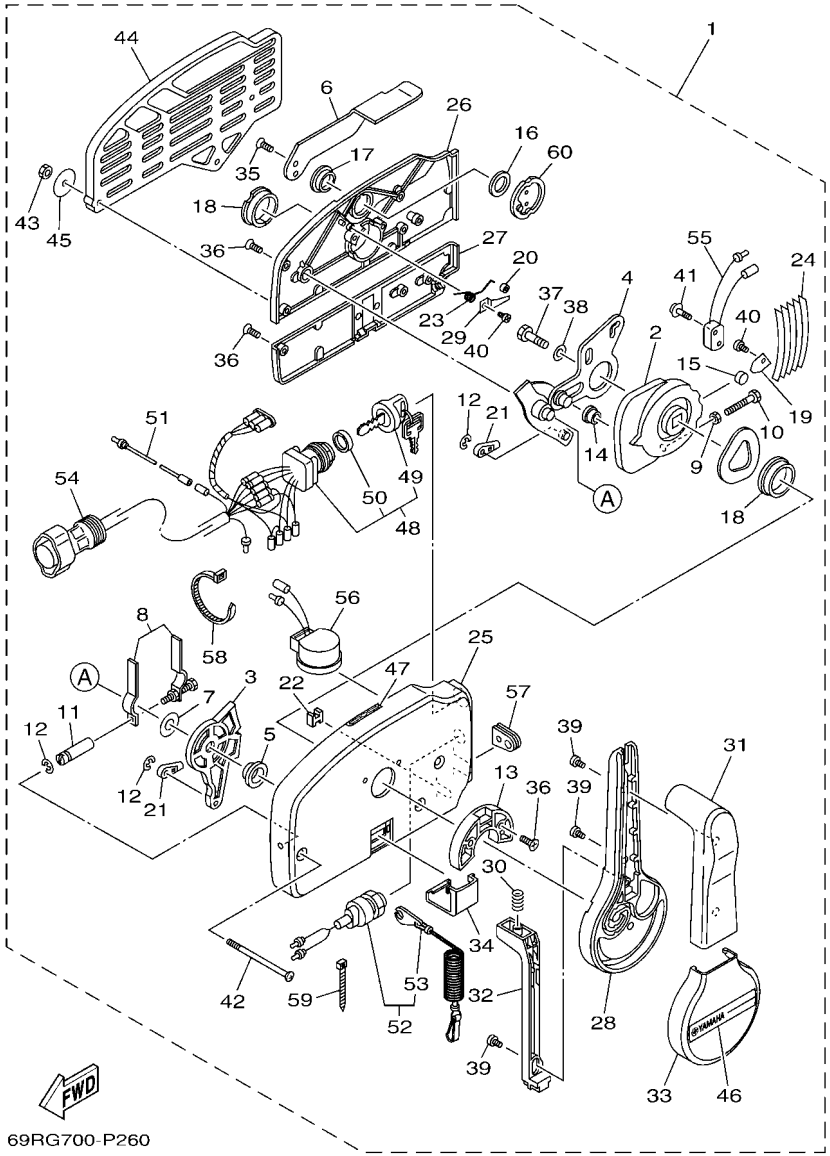

FIG. 31 REMOTE CONTROL ASSY — CONTROL REMOTO COMPL

REF. NO.	PART NO. CODIGO Nº	DESCRIPTION DESCRIPCION	MHD	WHD	WD			REMARKS OBSERVACIONES
55	703–82540–00	.NEUTRAL SWITCH ASSY .INTERRUPTOR NEUTRAL COMPL			1			
56	703–83383–11	.BUZZER .ZUMBADOR			1			
57	703–48284–00	.GROMMET .TAPON			1			
58	703–82591–00	.BAND .BANDA			1			
59	703–82592–00	.BAND .BANDA			1			
60	703–48153–00	.SHAFT, FREE ACCEL. .EJE			1			

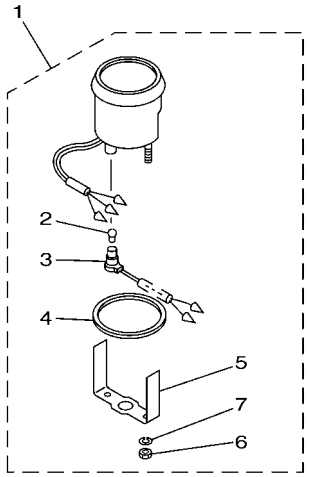

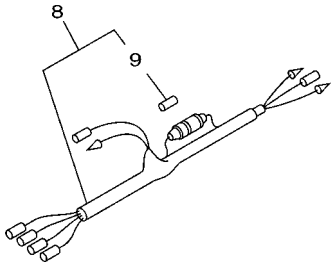

6964200-D311

FIG. 32 METER — MEDIDOR

REF. NO.	PART NO. CODIGO Nº	DESCRIPTION DESCRIPCION	MHD	WHD	WD			REMARKS OBSERVACIONES
1	6Y7–83540–20	TACHOMETER ASSY TACOMETRO COMPLETO			1			AP FOR CHN WITHOUT OIL LAMP AP FOR CHN WITHOUT OIL LAMP
2	6Y5–83517–00	.BULB (T10, 12V-1.7W) .BOMBILLA (T10, 12V-1.7W)			1			
3	6Y5–83536–40	.SOCKET, METER .ENCASTRE DE MEDIDOR			1			
4	6Y5–83523–00	.DAMPER .AMORTIGUADOR			1			
5	6Y5–83514–00	.PLATE, FITTING .PLACA ACCESORIA			1			
6	95380–05600	.NUT .TUERCA			2			
7	92990–05100	.WASHER, SPRING .ARANDELA PLANA			2			
8	6Y5–83553–01	WIRE, LEAD (L=2.5M) CABLE CONDUCTOR (L=2.5M)			1			AP FOR CHN AP FOR CHN
9	6G1–82151–01	.FUSE (10A) .FUSIBLE (10A)			1			

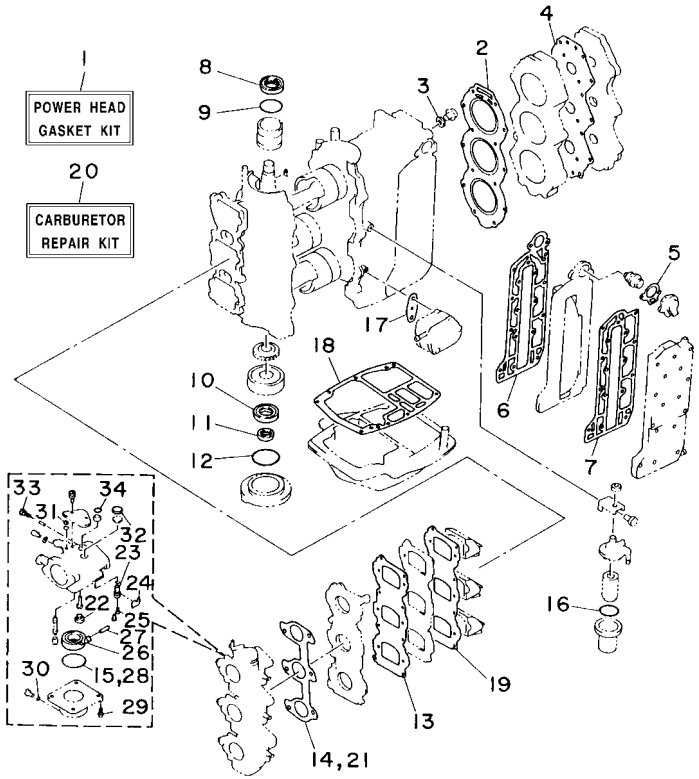

6H20010-4180

FIG. 33 REPAIR KIT 1 — ESTUCHE REPARATION 1

REF. NO.	PART NO. CODIGO Nº	DESCRIPTION DESCRIPCION	MHD	WHD	WD			REMARKS OBSERVACIONES
1	69D–W0001–00	POWER HEAD GASKET KIT JUEGO DE EMPAQUE DE MOTOR	1	1	1			
2	6H3–11181–A2	.GASKET, CYLINDER HEAD 1 .JUNTA, DE CULATA 1	1	1	1			
3	90430–14115	.GASKET .JUNTA	1	1	1			
4	6H3–11193–A1	.GASKET, HEAD COVER 1 .EMPAQUE	1	1	1			
5	6H3–12414–A1	.GASKET, COVER .EMPAQUE	1	1	1			
6	6H3–41112–A0	.GASKET, EXHAUST INNER COVER .EMPAQUE	1	1	1			
7	6H3–41114–A0	.GASKET, EXHAUST OUTER COVER .EMPAQUE	1	1	1			
8	93102–36M24	.OIL SEAL .SELLO ACEITE	1	1	1			
9	93210–46M16	.O-RING .ANILLO O	1	1	1			
10	93102–30009	.OIL SEAL .SELLO ACEITE	1	1	1			
11	93106–18001	.OIL SEAL .SELLO ACEITE	1	1	1			
12	93210–65M50	.O-RING .ANILLO O	1	1	1			
13	6H3–13621–A1	.GASKET, VALVE SEAT .JUNTA, DE VALV.DE EMPAQUE	1	1	1			
14	6H3–14198–A1	.GASKET .EMPAQUE	1	1	1			
15	6G1–14984–00	.O-RING .EMPAQUE CAMARA DE BOIA	3	3	3			
16	61A–24564–00	.O-RING .ANILLO O	1	1	1			
17	650–24431–A0	.GASKET, FUEL PUMP 1 .EMPAQUE BOMBA COMBUST 1	1	1	1			
18	6H3–45113–A0	.GASKET, UPPER CASING .EMPAQUE	1	1	1			
19	6H3–13622–A1	.GASKET, VALVE SEAT .EMPAQUE DE ASIENTO VALVULA	1	1	1			
20	6H3–W0093–02	CARBURETOR REPAIR KIT KIT REPARACION CARBURADOR	1	1	1			
21	6H3–14198–A1	.GASKET .EMPAQUE	1	1	1			
22	676–14966–00	.CAP .TAPA	3	3	3			
23	6H3–14590–01	.NEEDLE VALVE ASSY .VALVULA DE AGUJA COMPLETA	3	3	3			
24	663–14159–00	.CLIP .PRESILLA	3	3	3			
25	676–14186–00	.PIN, FLOAT .PASADOR DE LA BOYA	3	3	3			
26	6G1–14985–00	.FLOAT .BOIA	3	3	3			
27	688–14548–00	.PIN, FLOAT ARM .PASADOR DE BRAZO DE BOIA	3	3	3			

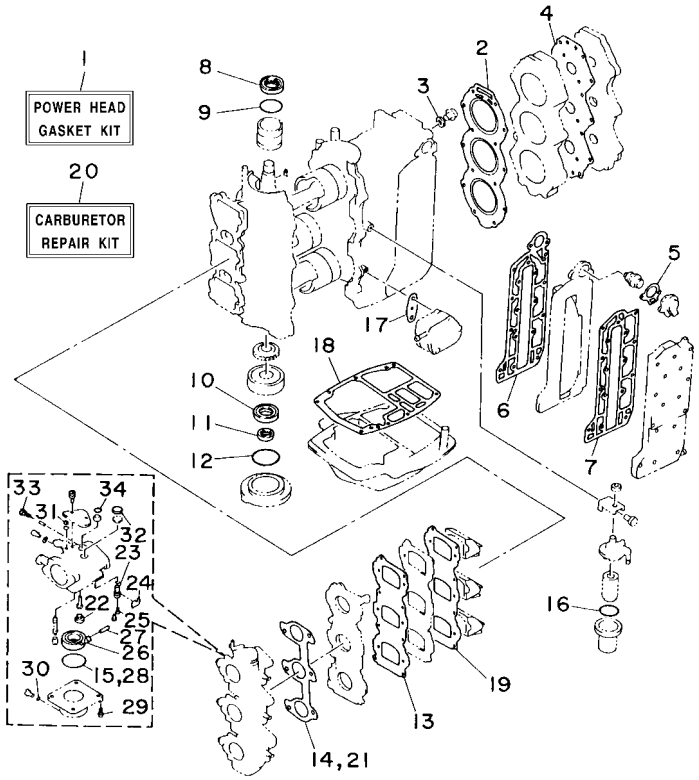

6H20010-4180

FIG. 33 REPAIR KIT 1 — ESTUCHE REPARATION 1

REF. NO.	PART NO. CODIGO Nº	DESCRIPTION DESCRIPCION	MHD	WHD	WD			REMARKS OBSERVACIONES
28	6G1–14984–00	.O-RING .EMPAQUE CAMARA DE BOIA	3	3	3			
29	97980–04114	.SCREW, WITH WASHER .TORNILLO, CON ARANDELA	3	3	3			
30	93210–04230	.O-RING .ANILLO O	3	3	3			
31	663–14126–00	.GASKET .EMPAQUE	3	3	3			
32	688–14126–00	.GASKET .EMPAQUE	3	3	3			
33	692–14923–00	.SCREW, PILOT .TORNILLO DE AJUSTE	3	3	3			
34	93210–15M52	.O-RING .ANILLO O	3	3	3			

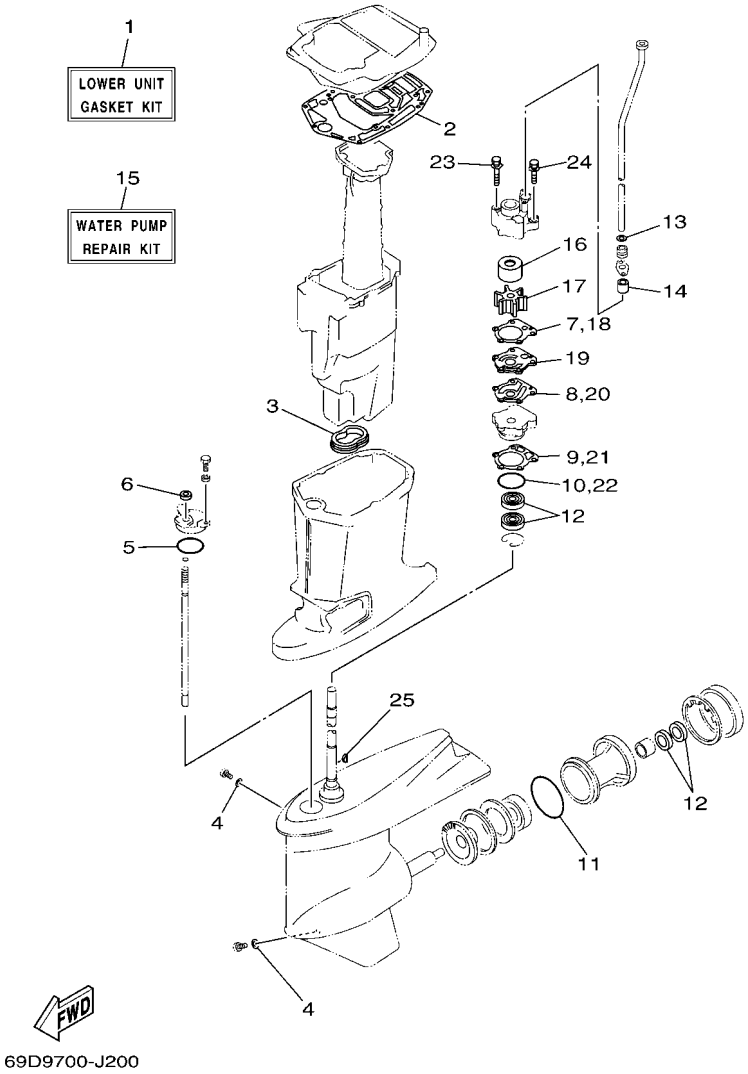

FIG. 34 REPAIR KIT 2 — ESTUCHE REPARATION 2

REF. NO.	PART NO. CODIGO Nº	DESCRIPTION DESCRIPCION	MHD	WHD	WD			REMARKS OBSERVACIONES
1	69D–W0001–20	LOWER UNIT GASKET KIT JUEGO DE EMPAQUE UNIDAD INFER.	1	1	1			
2	6H3–45114–A1	.GASKET, UPPER CASING .EMPAQUE	1	1	1			
3	6H3–45123–00	.GASKET, MUFFLER .EMPAQUE SILENCIADOR	1	1	1			
4	90430–08003	.GASKET .JUNTA	2	2	2			
5	93210–49046	.O-RING .ANILLO O	1	1	1			
6	93106–09014	.OIL SEAL .SELLO ACEITE	1	1	1			
7	688–44315–A0	.GASKET, WATER PUMP .EMPAQUE	1	1	1			
8	688–44324–A0	.GASKET, CARTRIDGE .EMPAQUE	1	1	1			
9	688–44316–A0	.GASKET, WATER PUMP .EMPAQUE	1	1	1			
10	93210–46044	.O-RING .ANILLO O	1	1	1			
11	93210–85M97	.O-RING .ANILLO O	1	1	1			
12	93101–25M03	.OIL SEAL .SELLO ACEITE	4	4	4			
13	90430–12072	.GASKET .JUNTA	1	1	1			
14	663–44366–00	.DAMPER, WATER SEAL 2 .GOMA DEL SELLO DE AGUA 2	1	1	1			
15	69D–W0078–00	WATER PUMP REPAIR KIT ESTUCHE REPARACION BOMBA AGUA	1	1	1			
16	69D–44322–00	.INSERT, CARTRIDGE .CARTUCHO	1	1	1			
17	688–44352–03	.IMPELLER .IMPULSOR	1	1	1			
18	688–44315–A0	.GASKET, WATER PUMP .EMPAQUE	1	1	1			
19	688–44323–40	.OUTER PLATE, CARTRIDGE .PLACA EXTERIOR DEL CARTUCHO	1	1	1			
20	688–44324–A0	.GASKET, CARTRIDGE .EMPAQUE	1	1	1			
21	688–44316–A0	.GASKET, WATER PUMP .EMPAQUE	1	1	1			
22	93210–46044	.O-RING .ANILLO O	1	1	1			
23	90119–08196	.BOLT, WITH WASHER .TORNILLO CON ARANDELA	2	2	2			
24	90119–08192	.BOLT, WITH WASHER .TORNILLO CON ARANDELA	2	2	2			
25	90280–04M04	.KEY, WOODRUFF .CUNA WOODRUFF	1	1	1			

NUMERICAL INDEX
INDICE NUMERICO

PART NO. CODIGO Nº	REF. NO.
6H3–11111–01–1S	3 – 24
6K5–11119–01	3 – 20
6H3–11181–A2	3 – 25
	33 – 2
6H3–11191–00–1S	3 – 26
6H3–11193–A1	3 – 27
	33 – 4
6H3–11325–01	1 – 1
	3 – 16
6H3–11327–00–94	3 – 17
6H3–11328–00	3 – 18
650–11370–01	3 – 4
688–11370–01	3 – 3
6K5–11401–00	4 – 7
6K5–11402–00	4 – 14
6K5–11403–00	4 – 21
6K5–11412–00	4 – 8
6K5–11422–00	4 – 9
	4 – 15
6H3–11432–00	4 – 16
6H3–11432–01	4 – 22
6K5–11442–01	4 – 23
6H3–11515–00	4 – 33
6K5–11601–02	4 – 37
6K5–11601–12	4 – 37
6K5–11601–22	4 – 37
6K5–11631–03–95	4 – 36
6H3–11633–00	4 – 38
688–11634–10	4 – 39
6K5–11635–03	4 – 36
6K5–11636–03	4 – 36
6K5–11651–00	4 – 10
	4 – 17
	4 – 24
6K5–11681–00	4 – 11
	4 – 18
	4 – 25
6H3–12411–11	1 – 2
	3 – 31
688–12412–00	3 – 32
6H3–12413–00–1S	3 – 33
6H3–12414–A1	1 – 3
	3 – 34
	33 – 5
6H2–13610–00	5 – 1
6H3–13621–A1	5 – 5
	33 – 13
6H3–13622–A1	5 – 7

PART NO. CODIGO Nº	REF. NO.
6H3–13622–A1	33 – 19
6H3–13624–00	5 – 6
6H3–13641–04	5 – 4
663–14126–00	6 – 19
	33 – 31
688–14126–00	6 – 21
	33 – 32
663–14159–00	6 – 9
	33 – 24
676–14186–00	6 – 10
	33 – 25
6H3–14198–A1	5 – 10
	33 – 14
	33 – 21
6K5–14301–10	6 – 1
6K5–14302–10	6 – 2
6K5–14303–10	6 – 3
6A0–14325–00	7 – 32
6H3–14413–11	5 – 17
6H3–14440–02	5 – 18
6H3–14457–01	5 – 19
624–14485–00	3 – 5
63V–14523–00	6 – 29
663–14527–00	6 – 20
688–14527–00	6 – 22
6H2–14527–01	6 – 23
688–14548–00	6 – 13
	33 – 27
679–14555–00	6 – 26
6H2–14578–00	6 – 31
6H3–14578–00	6 – 32
6H3–14590–01	6 – 8
	33 – 23
6K5–14592–00	6 – 27
6H3–14711–01–CA	23 – 12
69D–14711–10–CA	23 – 12
6H3–14711–11–CA	23 – 12
6H3–14737–00	23 – 17
6H3–14737–10	23 – 17
692–14923–00	6 – 25
	33 – 33
676–14943–34	6 – 5
6K5–14945–36	6 – 35
6H2–14947–02	6 – 4
6H4–14948–15	6 – 6
6K5–14950–21	6 – 36
676–14966–00	6 – 7
	33 – 22

PART NO. CODIGO Nº	REF. NO.
6H2–14980–00	6 – 15
6G1–14984–00	6 – 14
	33 – 15
	33 – 28
6G1–14985–00	6 – 12
	33 – 26
6H3–14992–00	6 – 17
69D–15100–00	3 – 2
6H3–15359–00–94	4 – 1
692–15711–01	8 – 2
663–15713–00	8 – 5
663–15714–02	8 – 6
663–15715–00	8 – 12
696–15716–00	8 – 13
663–15719–00	8 – 15
6K5–15723–00	8 – 44
663–15726–01	8 – 10
696–15734–00	8 – 14
663–15735–01	8 – 47
663–15736–00	8 – 52
663–15739–00	8 – 4
663–15741–02	8 – 8
663–15744–00	8 – 11
663–15752–00	8 – 18
6F5–15753–00	8 – 19
663–15754–00	8 – 9
689–15755–01	8 – 23
6K5–15758–01–94	8 – 38
6K5–15761–00	2 – 12
6K5–15762–00	8 – 42
663–15764–00	8 – 7
6K5–15770–01	8 – 45
6K5–15771–00–94	8 – 33
6K5–15772–00–94	8 – 35
648–15773–00	8 – 3
6K5–15773–01	8 – 37
6K5–15774–00	8 – 56
6F5–15779–02	8 – 25
697–15789–00	8 – 43
6F5–15791–00	8 – 20
663–15794–00	8 – 49
6YJ–24167–00	27 – 7
	28 – 7
6YJ–24201–20	27 – 1
6YJ–24201–30	28 – 1
6YJ–24260–10	27 – 3
6Y1–24260–30	28 – 3
6Y1–24268–00	27 – 6

PART NO. CODIGO Nº	REF. NO.
6Y1–24268–00	28 – 6
6G1–24304–10	7 – 1
6G1–24305–05	27 – 13
	28 – 13
6Y1–24305–06	27 – 15
	28 – 15
61J–24306–04	27 – 8
	28 – 8
69D–24311–00	7 – 3
69D–24312–00	7 – 19
663–24312–01	3 – 41
6H3–24313–00	7 – 39
6H3–24314–00	7 – 41
6Y1–24329–00	27 – 5
	28 – 5
650–24351–51	27 – 12
	28 – 12
61J–24360–00	27 – 10
	28 – 10
688–24378–00	7 – 38
692–24410–00	7 – 22
663–24411–00	7 – 27
692–24411–00	7 – 24
6A0–24412–02	7 – 33
6A0–24413–00	7 – 23
6A0–24421–01	7 – 31
650–24431–A0	7 – 34
	33 – 17
648–24434–01	7 – 25
648–24435–02	7 – 28
61A–24469–00	7 – 12
61A–24521–00	7 – 7
65L–24531–01	7 – 8
60H–24558–00	7 – 13
61A–24560–04	7 – 6
61A–24563–00	1 – 6
	7 – 11
61A–24564–00	1 – 5
	7 – 9
	33 – 16
69D–24566–01	7 – 16
61A–24577–01	7 – 10
6YJ–24610–01	27 – 2
	28 – 2
692–26301–03	17 – 18
6H3–41111–01–1S	3 – 36
6H3–41112–A0	3 – 37
	33 – 6

PART NO. CODIGO Nº	REF. NO.
6H3–41113–02–1S	3 – 38
6H3–41114–A0	3 – 39
	33 – 7
69D–41131–00–CA	23 – 10
6H2–41131–00–CA	23 – 10
6H3–41137–01–CA	23 – 5
6H3–41213–20	18 – 22
6H3–41217–00	5 – 11
662–41237–01	18 – 14
	18 – 20
682–41237–50	18 – 19
6H3–41238–00	18 – 1
6H3–41257–00	5 – 12
6J8–41262–00	20 – 12
661–41262–02	5 – 13
	5 – 16
6H3–41271–01	5 – 14
689–41273–00	5 – 15
6H4–41611–00	9 – 11
6H3–41612–00	9 – 12
6H3–41612–10	9 – 14
6K5–41618–00	9 – 15
6H3–41631–00	18 – 2
6H3–41632–00	18 – 8
6H3–41633–00	18 – 11
679–41636–00	18 – 15
663–42111–02–8D	17 – 1
692–42111–21–8D	17 – 1
663–42115–00	17 – 9
692–42115–00	17 – 9
664–42119–00	17 – 2
692–42121–02–8D	17 – 19
663–42126–01	17 – 54
663–42133–01	17 – 13
663–42134–03–94	17 – 14
663–42135–01	17 – 12
61U–42137–00	17 – 4
663–42138–00	17 – 10
6G1–42177–00	17 – 3
6H3–42191–01	17 – 39
6H3–42192–00	17 – 41
69D–42508–01	17 – 45
6H3–42510–03–8D	22 – 1
69D–42510–11–8D	22 – 1
69D–42515–00	17 – 50
663–42518–00	17 – 46
67G–42528–00	17 – 47
69D–42610–11	2 – 1

PART NO. CODIGO Nº	REF. NO.
69D–42610–21	2 – 1
6H3–42613–01–8D	2 – 9
6H3–42615–00	2 – 11
69D–42616–00	2 – 13
6K5–4261A–01	2 – 2
6K5–4261A–11	2 – 2
69D–42620–00–8D	2 – 9
6H3–42647–00	2 – 3
6H3–42649–00	2 – 4
6H3–42652–00	2 – 6
663–42662–00	2 – 5
696–42675–40	2 – 14
696–42676–40	2 – 15
6H2–42678–10	2 – 16
	2 – 17
63D–42681–40	2 – 18
	2 – 19
6H3–42711–06–8D	16 – 1
648–42715–00	18 – 27
6H3–42716–02	16 – 12
6K5–42717–00	16 – 13
6H3–42718–00	16 – 31
6E5–42724–00	16 – 14
6H3–42725–00	16 – 15
6K5–42725–00	16 – 15
6H3–42725–20	16 – 15
6H4–42726–00	16 – 23
6H3–42727–00	16 – 18
6H3–42738–01–CA	16 – 16
6H3–42741–01–8D	16 – 27
6BG–42748–00	16 – 19
69D–42758–00	14 – 5
6H3–42768–00	16 – 22
6H3–42771–01–8D	16 – 28
6EE–42794–40	16 – 32
6H3–42813–00	16 – 7
6H3–42815–01–8D	16 – 3
6H3–42816–00	16 – 9
6H3–42817–01–8D	16 – 4
6H3–42818–00	16 – 10
697–43107–04–8D	20 – 2
688–43107–05–8D	20 – 2
69D–43107–12–8D	21 – 33
63D–43111–01–8D	21 – 1
697–43111–05–8D	19 – 1
688–43111–13–8D	19 – 1
63D–43112–01–8D	21 – 6
697–43112–03–8D	19 – 7

NUMERICAL INDEX
INDICE NUMERICO

PART NO. CODIGO Nº	REF. NO.
688–43112–12–8D	19 – 7
648–43114–01	19 – 10
	21 – 9
663–43116–01	19 – 11
	21 – 10
663–43118–01–8D	19 – 13
	21 – 12
688–43124–02	20 – 5
69D–43126–01	19 – 35
	21 – 38
63D–43128–01–8D	21 – 13
688–43128–01–8D	20 – 1
697–43128–01–8D	20 – 1
63D–43131–01	21 – 17
688–43131–03	19 – 18
6G5–43144–00	19 – 40
	21 – 48
6E5–43145–01	29 – 9
6G5–43145–01	19 – 22
	21 – 21
6G5–43148–00	19 – 26
	21 – 26
697–43160–00	19 – 31
688–43160–01	19 – 31
	21 – 29
688–43165–00	19 – 32
	21 – 30
6H5–43181–03	21 – 22
688–43181–04	19 – 23
688–43181–10	19 – 23
6H5–43185–03	21 – 23
688–43185–04	19 – 24
688–43185–10	19 – 24
688–43186–00	20 – 10
6H1–43311–02–8D	19 – 15
697–43311–03–8D	19 – 15
69D–43311–11–8D	21 – 14
663–43318–00	19 – 30
682–43318–01	20 – 9
	21 – 46
688–43616–00	20 – 13
688–43631–00	20 – 3
69D–43631–00	21 – 34
688–43631–10	20 – 3
688–43651–00	20 – 15
63D–43691–00	19 – 17
	21 – 16
697–44113–00	17 – 27

PART NO. CODIGO Nº	REF. NO.
6H3–44117–00–94	18 – 30
6J2–44117–01–94	18 – 30
6K5–44120–03	18 – 26
6K5–44120–13	18 – 26
69D–44120–22	18 – 26
6H3–44121–01	18 – 35
688–44122–00	18 – 38
6H1–44144–00	24 – 55
6K5–44144–00	25 – 47
663–44151–00	25 – 46
6H1–44151–00	24 – 54
692–44159–01	17 – 30
663–44173–00	17 – 31
703–44189–20	31 – 36
703–44189–30	31 – 42
6K5–44191–00	17 – 28
6X3–44191–00	31 – 47
688–44194–00	18 – 5
688–44311–01	24 – 21
	25 – 20
688–44315–A0	24 – 23
	25 – 22
	34 – 7
	34 – 18
688–44316–A0	24 – 30
	25 – 29
	34 – 9
	34 – 21
69D–44322–00	24 – 22
	25 – 21
	34 – 16
688–44323–40	24 – 31
	25 – 30
	34 – 19
688–44324–A0	24 – 32
	25 – 31
	34 – 8
	34 – 20
6D8–44341–01–CA	24 – 26
	25 – 25
688–44352–03	24 – 24
	25 – 23
	34 – 17
69D–44361–00	26 – 2
69D–44361–10	26 – 2
69D–44361–20	26 – 2
663–44366–00	26 – 10
	34 – 14

PART NO. CODIGO Nº	REF. NO.
663–44367–00	26 – 1
69D–44391–00	16 – 2
688–44511–00	22 – 28
688–44514–00	22 – 21
6EK–44536–00	19 – 3
6H3–44551–01–8D	22 – 7
69D–44551–11–8D	22 – 7
6H3–44553–10–8D	22 – 17
687–44555–00	22 – 9
688–44555–00	22 – 9
663–44575–00	22 – 27
688–44575–00	22 – 14
6H3–45111–01–8D	23 – 1
6H3–45111–12–8D	23 – 1
6H3–45113–A0	23 – 7
	33 – 18
6H3–45114–A1	23 – 15
	34 – 2
6H3–45123–00	23 – 14
	34 – 3
6H3–45127–00	23 – 13
6C5–45155–00	23 – 3
688–45211–01–8D	23 – 18
696–45211–01–8D	23 – 18
6H1–45214–00	24 – 12
	25 – 12
6H1–45215–00	24 – 13
	25 – 13
663–45251–00	1 – 7
	19 – 2
	21 – 36
63D–45251–01	1 – 8
	21 – 2
6H1–45251–03	1 – 8
	19 – 2
69D–45300–02–8D	24 – 1
69D–45300–12–8D	24 – 1
69D–45300–22–8D	24 – 1
69D–45300–42–8D	25 – 1
6H1–45301–03–8D	24 – 2
688–45311–06–8D	25 – 2
688–45321–00	24 – 16
	25 – 16
688–45331–00–CA	24 – 60
	25 – 51
688–45341–10	24 – 10
	25 – 10
67F–45371–00	1 – 10

PART NO. CODIGO Nº	REF. NO.
67F–45371–00	26 – 8
688–45375–00	26 – 7
663–45376–00	26 – 6
6J8–45378–00	24 – 20
688–45383–02	24 – 68
	25 – 59
688–45384–02	24 – 69
	25 – 60
69D–45501–00	24 – 36
69D–45501–10	24 – 36
	25 – 35
69D–45501–20	24 – 36
688–45536–01	24 – 4
	25 – 4
6K5–45551–00	24 – 37
	25 – 36
6K5–45560–00	24 – 39
	25 – 38
688–45567–01	24 – 7
	25 – 7
688–45567–10	24 – 7
	25 – 7
688–45567–20	24 – 7
	25 – 7
688–45567–30	24 – 7
	25 – 7
688–45567–40	24 – 7
	25 – 7
688–45567–50	24 – 7
	25 – 7
688–45567–60	24 – 7
	25 – 7
6H3–45571–00	24 – 59
6K5–45571–00	25 – 50
688–45576–00	24 – 63
	25 – 54
688–45577–01	24 – 62
	25 – 53
688–45577–10	24 – 62
	25 – 53
688–45577–20	24 – 62
	25 – 53
688–45577–30	24 – 62
	25 – 53
688–45577–40	24 – 62
	25 – 53
688–45577–50	24 – 62
	25 – 53

PART NO. CODIGO Nº	REF. NO.
688–45577–60	24 – 62
	25 – 53
688–45587–01	24 – 5
	25 – 5
688–45587–10	24 – 5
	25 – 5
688–45587–20	24 – 5
	25 – 5
688–45587–30	24 – 5
	25 – 5
688–45587–40	24 – 5
	25 – 5
688–45587–50	24 – 5
	25 – 5
688–45587–60	24 – 5
	25 – 5
688–45611–00	25 – 39
6H1–45611–01	24 – 40
688–45631–01	25 – 40
6H1–45631–01	24 – 41
688–45633–00	24 – 52
	25 – 45
688–45634–00	25 – 41
6H1–45634–02	24 – 43
688–45635–00	25 – 43
6H1–45635–00	24 – 47
6H1–45641–01	24 – 53
6H1–45668–00	24 – 46
688–45930–02	26 – 18
688–45932–60	26 – 18
6E5–45941–00	26 – 18
6E5–45943–00	26 – 18
6E5–45945–01	26 – 18
6E5–45947–00	26 – 18
6E5–45949–00	26 – 18
6E5–45952–00	26 – 18
6E5–45954–00	26 – 18
6E5–45956–00	26 – 18
688–45970–03	26 – 18
688–45972–02	26 – 18
688–45974–02	26 – 18
688–45976–01	26 – 18
688–45978–60	26 – 18
688–45987–01	26 – 13
67F–45997–00	26 – 14
703–48128–10	31 – 39
703–48129–00	31 – 41
703–48152–10	31 – 6

PART NO. CODIGO Nº	REF. NO.
703–48153–00	31 – 60
703–48189–00	31 – 19
703–48198–00	31 – 16
703–48211–10	31 – 25
703–48212–10	31 – 26
703–48213–10	31 – 27
703–48215–11	31 – 46
703–48219–10	31 – 34
703–48221–10	31 – 28
703–48222–30	31 – 31
703–48223–10	31 – 32
703–48225–10	31 – 33
703–48227–00	31 – 30
703–48230–22	30 – 1
	31 – 1
703–48232–00	31 – 2
703–48234–00	31 – 20
703–48235–00	31 – 5
703–48236–00	31 – 18
703–48238–00	31 – 24
703–48243–00	31 – 17
703–48244–00	31 – 23
703–48245–00	31 – 13
703–48246–00	31 – 29
701–48248–00	31 – 15
703–48252–00	31 – 14
703–48261–11	31 – 4
703–48264–00	31 – 8
703–48265–10	31 – 11
703–48268–00	31 – 7
703–48271–00	31 – 3
703–48281–00	31 – 35
703–48284–00	31 – 57
701–48287–00	31 – 45
703–48293–10	31 – 44
701–48310–80	30 – 2
701–48320–20	30 – 2
701–48320–50	30 – 2
700–48339–00	17 – 42
6FM–48344–00	18 – 17
	18 – 39
703–48345–01	31 – 21
703–48358–01	31 – 22
6H3–48511–52	22 – 19
6H3–48538–00	18 – 40
688–61350–10	29 – 1
688–61351–10	29 – 2
6E5–61355–00	29 – 8

NUMERICAL INDEX
INDICE NUMERICO

PART NO. CODIGO Nº	REF. NO.
6K5–81332–00	9 – 16
6K5–81332–60	9 – 16
6H3–81800–11	15 – 1
6H3–81807–10	15 – 3
689–81809–11	15 – 7
6H3–81810–10	15 – 9
689–81811–11	15 – 12
689–81812–11	15 – 11
689–81813–10	15 – 13
6H3–81820–11	15 – 14
689–81826–10	15 – 15
6H3–81830–10	15 – 4
689–81831–00	15 – 5
689–81840–11	15 – 10
689–81847–11	15 – 6
689–81850–12	15 – 8
689–81857–11	15 – 2
6H3–81916–00	10 – 18
6H3–81922–00	10 – 7
688–81950–10	11 – 5
	12 – 4
6G1–81970–63	11 – 1
	12 – 1
6EE–81994–40	5 – 22
6EE–81995–40	8 – 59
6H3–82105–02	11 – 9
	12 – 8
6H3–82117–01	11 – 10
	12 – 9
703–82119–00	16 – 24
69D–82127–00	22 – 18
6H1–82127–00	22 – 18
63D–82148–00	21 – 7
6E5–82148–00	19 – 8
6H1–82148–00	21 – 4
6G1–82151–01	11 – 2
	12 – 2
	32 – 9
6H3–82164–00	11 – 7
	12 – 6
6A0–82317–00	8 – 39
63M–82370–01	10 – 22
663–82370–01	10 – 22
6G1–82370–21	10 – 22
6H3–82510–21	13 – 1
703–82510–34	31 – 48
697–8252E–02–8D	13 – 11
697–8252F–02–8D	13 – 12

PART NO. CODIGO Nº	REF. NO.
69D–82531–00	10 – 2
703–82531–00	31 – 51
6K1–82532–00	31 – 50
703–82532–00	13 – 3
703–82540–00	31 – 55
6H3–82540–01	13 – 6
6H3–82554–00	13 – 7
663–82555–01	13 – 8
682–82556–00	13 – 5
	17 – 59
	31 – 53
688–82560–10	10 – 26
688–82575–02	31 – 52
6K5–82575–03	17 – 58
688–82575–12	13 – 4
703–82577–00	31 – 49
676–82577–01	13 – 2
689–8257Y–00	17 – 60
688–82586–21	31 – 54
6H3–82590–01	12 – 10
69D–82590–10	11 – 4
69D–82590–20	11 – 4
703–82591–00	31 – 58
703–82592–00	31 – 59
688–82594–00	11 – 11
	12 – 12
703–83383–11	31 – 56
6Y5–83504–22	14 – 1
6Y5–83514–00	32 – 5
6Y5–83517–00	32 – 2
69D–83519–00	14 – 2
6Y5–83523–00	32 – 4
6Y5–83536–40	32 – 3
6Y7–83540–20	32 – 1
6Y5–83553–01	32 – 8
6H3–85510–A1	9 – 2
64J–85516–00	14 – 4
663–85518–00	9 – 4
6H3–85520–00	9 – 3
6H3–85533–A0	9 – 6
6H3–85540–12	10 – 13
6H3–85542–00	10 – 3
6K5–85550–11	9 – 1
6K5–85550–A1	9 – 1
6H3–85570–10	10 – 20
6H3–86110–02	12 – 13
6H3–86116–00	12 – 14
69D–W0001–00	33 – 1

PART NO. CODIGO Nº	REF. NO.
69D–W0001–20	34 – 1
688–W0004–00	5 – 2
69D–W0078–00	1 – 11
	34 – 15
69D–W0090–02–1S	3 – 1
6H3–W0093–02	33 – 20
69D–W1140–01	4 – 6
692–W1571–03	8 – 1
656–W2810–02	7 – 43
90101–06M27	17 – 55
90101–08002	3 – 21
90101–10041	22 – 22
90101–12063	19 – 42
	21 – 50
90101–12M06	17 – 20
90105–06M14	10 – 4
90105–10M67	26 – 9
90109–12M21	22 – 13
90116–06M07	10 – 8
90116–08M69	3 – 29
90116–10063	22 – 30
90116–10M05	23 – 20
90116–10M31	23 – 20
90116–18M52	21 – 42
90119–06023	3 – 19
90119–06274	19 – 4
90119–06275	16 – 11
90119–06290	8 – 41
90119–06291	16 – 21
90119–06305	18 – 13
90119–06306	14 – 7
90119–06309	18 – 25
90119–06MA3	3 – 35
	5 – 8
90119–06MA5	3 – 40
	3 – 40
90119–08087	8 – 29
90119–08155	23 – 21
90119–08158	23 – 21
90119–08180	8 – 30
90119–08192	24 – 35
	25 – 34
	34 – 24
90119–08196	24 – 34
	25 – 33
	34 – 23
90119–08M64	3 – 8
90119–08M81	23 – 4

PART NO. CODIGO Nº	REF. NO.
90119–08MA5	3 – 28
90119–10005	3 – 7
90149–05095	8 – 51
90151–05M00	24 – 14
	25 – 14
90152–05011	17 – 5
90152–06M01	19 – 5
	21 – 37
90157–05M19	27 – 4
	28 – 4
90157–06M13	18 – 3
90159–05M13	14 – 3
90160–04006	26 – 12
90170–09M03	29 – 5
90170–16M01	24 – 38
	25 – 37
90170–18M10	21 – 45
90170–20137	9 – 9
90171–16011	26 – 16
90175–06003	17 – 49
	17 – 57
90179–08M34	3 – 30
90183–02M03	24 – 50
90185–05002	24 – 15
	25 – 15
90185–08057	17 – 52
90185–09M01	29 – 4
90185–10027	17 – 36
	22 – 26
	22 – 31
90185–12058	17 – 26
90185–22043	19 – 21
	21 – 20
90201–03313	24 – 49
90201–05652	6 – 28
90201–06068	7 – 15
90201–06M31	18 – 9
90201–10049	22 – 20
90201–10081	29 – 7
90201–10120	17 – 35
90201–10M02	17 – 6
90201–10M20	29 – 3
90201–11M22	22 – 25
90201–12062	19 – 43
	21 – 51
90201–12426	19 – 44
	21 – 52
90201–12537	17 – 24

PART NO. CODIGO Nº	REF. NO.
90201–12M16	22 – 10
90201–12M34	17 – 38
90201–13M19	22 – 12
90201–20417	4 – 41
90201–20M21	22 – 23
90201–21M18	9 – 10
90201–22M03	21 – 19
90201–22M67	19 – 20
90201–30M00	22 – 2
90202–03M51	20 – 14
90202–07M07	18 – 37
90202–12060	26 – 3
90202–12092	17 – 23
90202–20M06	22 – 24
90202–25M04	22 – 11
90206–10M04	18 – 23
90206–12054	17 – 25
90206–13M10	16 – 6
90209–06M05	5 – 21
90209–27011	4 – 12
	4 – 19
	4 – 26
90243–04007	19 – 12
	21 – 11
90249–06M19	19 – 28
	21 – 28
90250–07M02	24 – 51
	25 – 44
90254–03002	4 – 34
90254–03003	17 – 11
90266–06009	2 – 8
90269–04M03	16 – 8
90280–04M04	24 – 25
	25 – 24
	34 – 25
90280–05015	9 – 8
90282–04010	24 – 67
	25 – 58
90338–05M03	16 – 25
	16 – 26
90340–08002	24 – 9
	25 – 9
90340–14M06	3 – 22
90385–12M04	8 – 31
90386–06088	17 – 40
90386–07M58	18 – 32
90386–08032	17 – 8
90386–10009	17 – 34

PART NO. CODIGO Nº	REF. NO.
90386–10025	21 – 25
90386–10M16	19 – 25
	19 – 25
	21 – 24
90386–12089	17 – 22
90386–13M38	16 – 5
90386–18M21	19 – 36
	20 – 6
90386–18M35	19 – 37
	20 – 8
90386–18M44	21 – 43
90386–18M63	20 – 7
90386–22M15	19 – 19
	21 – 18
90386–30M60	22 – 6
90386–30M77	22 – 4
90386–30M78	22 – 3
90387–06119	8 – 40
90387–06289	18 – 6
	18 – 24
90387–06M43	10 – 5
90387–06M59	18 – 12
90387–06M69	16 – 20
90387–08M05	8 – 32
90387–10M02	19 – 29
90387–10M38	19 – 28
90387–10M42	29 – 6
90387–12M30	17 – 37
90387–16003	21 – 39
90387–16004	21 – 40
90389–25M00	26 – 15
90430–08003	1 – 9
	24 – 11
	25 – 11
	34 – 4
90430–12072	26 – 4
	34 – 13
90430–14115	3 – 23
	33 – 3
90445–07M02	3 – 11
90445–07M44	3 – 9
90445–07M45	3 – 12
90445–07M82	3 – 13
90445–09072	7 – 36
90445–09220	7 – 40
90445–11M05	27 – 11
	28 – 11
90445–11M06	27 – 9

NUMERICAL INDEX
INDICE NUMERICO

PART NO. CODIGO Nº	REF. NO.
90445–11M06	28 – 9
90446–10M02	10 – 27
90464–04M12	10 – 12
90464–07M05	3 – 15
90464–07M10	10 – 17
90464–08M07	10 – 15
	17 – 61
90464–10M59	7 – 5
90464–12M17	10 – 16
90464–15M11	11 – 8
	12 – 7
	14 – 6
90465–06M90	8 – 58
	10 – 23
90465–08M83	7 – 21
90465–11M10	7 – 4
	7 – 20
90465–18147	12 – 18
90467–06016	3 – 10
	3 – 14
90467–08004	3 – 42
	7 – 37
	7 – 42
90468–18008	8 – 53
	18 – 18
	18 – 36
90480–13M24	10 – 6
90480–19M06	26 – 11
90501–10326	6 – 30
90501–10M21	19 – 27
90501–12082	18 – 29
90501–12M48	24 – 48
90501–16233	25 – 42
90501–16M17	17 – 32
90501–16M65	24 – 44
90501–23215	17 – 7
90502–16M02	19 – 34
	21 – 32
90502–20M03	19 – 34
90506–08M23	8 – 48
90506–14M24	19 – 39
	21 – 47
90508–12015	8 – 50
90508–29051	18 – 10
91490–16012	8 – 55
91490–20012	18 – 34
91490–25012	17 – 44
91490–30025	19 – 29

PART NO. CODIGO Nº	REF. NO.
91490–30025	26 – 17
91690–30010	12 – 15
91690–30012	19 – 33
	21 – 31
91690–30020	19 – 27
	20 – 11
	21 – 27
92903–06100	10 – 25
	13 – 17
92903–06200	8 – 54
92903–08100	8 – 27
92903–08600	8 – 28
	15 – 19
92990–05100	7 – 30
	32 – 7
92990–06100	10 – 11
	13 – 14
92990–06200	10 – 10
92990–06600	17 – 43
	17 – 56
92990–08200	18 – 33
92990–08600	17 – 51
	31 – 38
92990–10100	23 – 23
92990–10600	19 – 26
92990–12200	17 – 21
92995–06100	8 – 17
	8 – 22
	13 – 10
92995–10600	23 – 24
92995–18600	21 – 44
93101–25M03	24 – 28
	24 – 66
	25 – 27
	25 – 57
	34 – 12
93102–30009	4 – 2
	33 – 10
93102–36M24	4 – 29
	33 – 8
93106–09014	24 – 18
	25 – 18
	34 – 6
93106–18001	4 – 3
	33 – 11
93210–03261	12 – 17
93210–04228	6 – 34
93210–04230	6 – 18

PART NO. CODIGO Nº	REF. NO.
93210–04230	33 – 30
93210–07003	24 – 56
	25 – 48
93210–08287	27 – 14
	27 – 16
	28 – 14
	28 – 16
93210–15M52	6 – 33
	33 – 34
93210–16275	29 – 10
93210–29M94	22 – 5
93210–46044	24 – 29
	25 – 28
	34 – 10
	34 – 22
93210–46M16	4 – 35
	33 – 9
93210–49046	24 – 17
	25 – 17
	34 – 5
93210–65M50	4 – 4
	33 – 12
93210–85M97	24 – 64
	25 – 55
	34 – 11
93306–207U0	24 – 61
	25 – 52
93306–306V1	4 – 32
93310–527W1	4 – 13
	4 – 20
	4 – 27
93311–636U6	4 – 28
93315–325V1	24 – 3
	25 – 3
93317–325U0	24 – 65
	25 – 56
93332–000U3	24 – 6
	25 – 6
93332–000UE	4 – 31
93332–000W7	24 – 8
	25 – 8
93410–16097	21 – 41
93410–18M05	19 – 38
93410–28M06	22 – 8
93430–06024	31 – 12
93440–49M04	4 – 30
93450–07M00	24 – 58
93450–44166	24 – 27

PART NO. CODIGO Nº	REF. NO.
93450–44166	25 – 26
93501–04M02	18 – 28
93503–16003	24 – 45
93515–32M01	17 – 33
93603–12M11	24 – 42
93603–18M09	4 – 40
93604–10M03	24 – 33
	25 – 32
93606–12019	23 – 2
	23 – 6
	23 – 19
	26 – 5
93608–12063	3 – 6
93700–06002	17 – 15
93700–06M03	19 – 16
	21 – 15
94702–00160	1 – 4
	3 – 43
94702–00247	1 – 4
	3 – 43
95380–03600	7 – 26
95380–05600	18 – 16
	18 – 21
	31 – 9
	32 – 6
95380–06600	18 – 4
	31 – 43
95380–06700	10 – 9
95380–10600	23 – 22
95380–12600	19 – 45
	21 – 53
95380–12800	22 – 15
97013–06012	8 – 57
	10 – 24
97013–06020	13 – 16
97013–08012	8 – 26
97013–08016	15 – 18
97017–06025	8 – 21
97080–06010	20 – 4
97080–06035	17 – 48
97095–06016	8 – 16
97380–05025	31 – 10
97380–08030	31 – 37
97513–06512	10 – 1
	12 – 11
97513–06516	11 – 6
	12 – 5
	12 – 16

PART NO. CODIGO Nº	REF. NO.
97513–06516	17 – 29
97513–06520	18 – 31
97513–06525	8 – 34
	10 – 21
	15 – 17
97513–06530	9 – 7
	13 – 15
97513–06555	8 – 36
97513–08535	15 – 16
97880–06012	19 – 9
97880–06025	13 – 13
97885–05012	17 – 17
97885–06008	17 – 16
	21 – 8
97885–06012	13 – 9
97885–06045	5 – 20
97902–05125	9 – 5
97980–04114	6 – 16
	33 – 29
97980–05216	5 – 3
97980–05225	11 – 3
	12 – 3
97980–05310	6 – 24
97980–06225	10 – 14
97985–06210	9 – 17
97985–06212	9 – 13
	10 – 19
97D95–06010	19 – 41
	21 – 35
	21 – 49
97D95–06025	18 – 7
97D95–06095	5 – 9
97E75–08530	23 – 8
	23 – 11
	23 – 16
97E75–08535	22 – 29
	23 – 9
97E75–08540	22 – 16
97E95–06416	7 – 14
97E95–06510	21 – 5
97E95–06512	8 – 46
97E95–06514	7 – 17
97E95–06516	2 – 10
	7 – 18
	16 – 17
	24 – 19
	25 – 19
97E95–06520	4 – 5

PART NO. CODIGO Nº	REF. NO.
97E95–06520	16 – 30
97E95–06525	7 – 2
	16 – 29
	21 – 3
97E95–06540	7 – 35
97E95–06616	2 – 7
	19 – 6
97E95–08530	17 – 53
97E95–10545	19 – 14
98503–05028	7 – 29
98580–04006	31 – 40
98580–04008	6 – 11
99001–08600	24 – 57
	25 – 49