YAMAHA

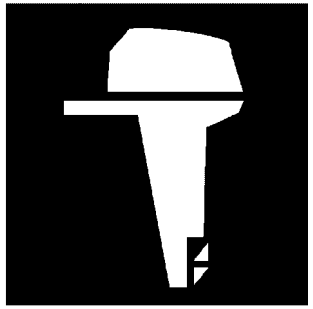

PARTS CATALOGUE
CATALOGO DE REPUESTOS

(E)40XMH'20 (6GK9)
E40XWH'20 (6GKA)
(E)40XW'20 (6GKA)
(E)40XWT'20 (6GKA)

YAMAHA
GENUINE
Parts & Accessories

1U6GK-200SA

( )

(E)40XMH/E40XWH
(E)40XW/(E)40XWT
PARTS CATALOGUE
©2020 by Yamaha Motor Co., Ltd.
1st edition, July 2020
All rights reserved.
Any reprinting or unauthorized use
without the written permission of
Yamaha Motor Co., Ltd.
is expressly prohibited.
Printed in Japan.

(E)40XMH/E40XWH
(E)40XW/(E)40XWT
CATALOGO DE REPUESTOS
©2020 por Yamaha Motor Co., Ltd.
1ª edición, julio 2020
Todos los derechos reservados.
Toda reproducción o uso no autorizado
sin el consentimiento escrito de
Yamaha Motor Co., Ltd.
quedan expresamente prohibidos
Impreso en Japón.

FOREWORD

This Parts Catalogue is related to the parts for the model(s) on the cover page. When you are ordering replacement parts, please refer to this Parts Catalogue and quote both part numbers and part names correctly.

1. Modifications or additions which have been made after the issue of the Parts Catalogue will be announced in the Parts News.
   It is advisable that you make the necessary corrections to the Parts Catalogue according to the Parts News.

2. Abbreviations
   The following abbreviations are used in this Parts Catalogue.
   "UR" Use specified parts number.
   "UN" Use as many as needed.
   "AP" Alternate Parts
   "LM" Locally Made (Parts need to be ordered locally)
   "F#" Frame No. (Applicable machine No.)
   "O/S" Over Size

3. The number of components for assembly
   - Parts, which are to be supplied in an assembly, are listed with a dot (.) in front of the part name as shown below.
   - The numeral appearing to the right of each component part indicates the quantity of parts for each assembly unit.

PART NO.	DESCRIPTION	Q'TY	REMARKS
2F5–83310–60	FRONT FLASHER LIGHT ASSY	2	
115–83311–60	.BULB (6V–18W)	1	

4. Applicable colours of graphics are represented in the "REMARKS" as shown below.

PART NO.	DESCRIPTION	Q'TY	REMARKS
2N4–24110–00–X5	FUEL TANK COMP.	2	MXR
3J1–24240–10	.GRAPHIC, FUEL TANK	1	FOR MXR

5. Note that the illustrations for reference in finding parts numbers are not to be used for assembling. When assembling, please use the applicable service manual.

6. The asterisk (*) before a reference number indicates modified items after the first edition.

7. Applicable Serial No.
   Engine Serial No.

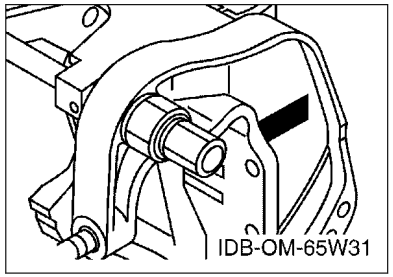

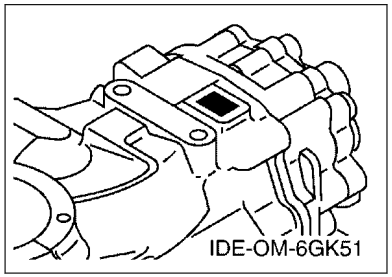

8. Applicable Engine Starting Serial No.

Model	Serial No.	Model	Serial No.
(E)40X	66TK-1251591		

9. Applicable Colour Code

Abbreviation	Colour Name	Colour Code
DBN1	DARK BLUISH GRAY 1	008D

10. Quantity Column Information

Column No.	Name Of Q'ty Column	Applicable Model
1	MH	40XMH,E40XMH
2	WH	E40XWH
3	W	40XW,E40XW
4	WT	40XWT,E40XWT

PROLOGO

Este catálogo de repuestos corresponde a las piezas para el o los modelos que figuran en la página de portada. Al formular el pedido de repuestos, se ruega citar este catálogo y especificar correctamente el número y el nombre de las piezas.

1. Las modificaciones y agregados que se hayan realizado después de la edición de este Catálogo de Repuestos, serán anunciados en las Informaciones de Recambios.
   Es recomendable que se hagan las correcciones necesarias en el Catálogo de Repuestos de acuerdo con las Informaciones de Recambios.

2. Abreviaciones
   En este. Catálogo de Repuestos se emplean las siguientes abreviaciones.
   "UR" Usar el número de partes especificado
   "UN" Usar la cantidad necesaria
   "AP" Piezas sustitutivas
   "LM" Fabricación local (Hay que pedir los repuestos en las cercanías)
   "F#" Nº de bastidor (Nº aplicable a la máquina)
   "O/S" Sobredimensionado

3. La cantidad de componentes para el montaje
   - Los componentes, suministrados como conjunto, se describen con un punto (.) que precede al nombre del parte como se indica a continuación.
   - La numeración que aparece a la derecha de cada descripción indica la cantidad de partes por cada unidad de conjunto.

CODIGO Nº	DESCRIPCION	CANT.	OBSERVACIONES
2F5–83310–60	ENSAMBLAJE DE LA LUZ	2	
115–83311–60	.BOMBILLA (6V–18W)	1	

4. Los colores de los componentes se indican como sigue en la columna de "OBSERVACIONES".

CODIGO Nº	DESCRIPCION	CANT.	OBSERVACIONES
2N4–24110–00–X5	COMP. DEL TANQUE	2	MXR
3J1–24240–10	.GRAFICO, DEL TANQUE	1	PARA MXR

5. Debe tenerse en cuenta que las ilustraciones sirven como guia para la búsqueda de los números de partes y no deben usarse para el montaje. Durante el montaje, se recomienda usar el manual de taller correspondiente.

6. EL asterisco (*) antes del número de referencia indica los elementos modificados después de la primera edición.

7. Números de serie
   Nº de Serie del motor

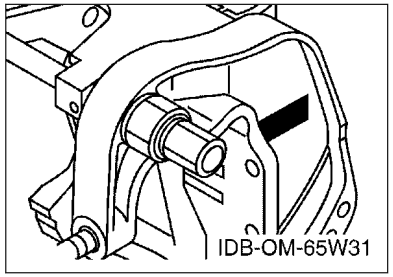

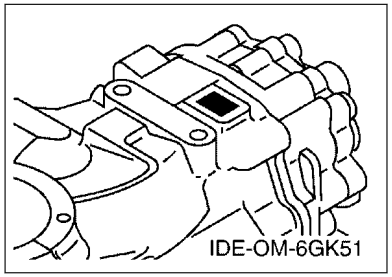

8. Números de serie del motor

Modelo	Nº de serie	Modelo	Nº de serie
(E)40X	66TK-1251591		

9. Códigos de color aplicables

Abreviatura	Nombre de color	Código de color
DBN1	DARK BLUISH GRAY 1	008D

10. Informacion para la columna de cantidades

Columna Nº	Nombre de la columna de cantidades	Modelo aplicable
1	MH	40XMH,E40XMH
2	WH	E40XWH
3	W	40XW,E40XW
4	WT	40XWT,E40XWT

CONTENTS

SCHEDULED SERVICE PARTS.....1
TOP COWLING.....2
CYLINDER & CRANKCASE.....3
CRANKSHAFT & PISTON.....5
INTAKE.....6
CARBURETOR.....7
FUEL.....8
STARTER.....10
GENERATOR.....12
ELECTRICAL 1.....14
ELECTRICAL 2.....15
ELECTRICAL 3.....17
STARTING MOTOR.....18
BOTTOM COWLING.....19
STEERING.....21
STEERING FRICTION.....23
CONTROL.....24
REMO CON ATTACHMENT.....26
BRACKET 1.....27
BRACKET 2.....30
BRACKET 3.....32
POWER TRIM & TILT ASSY.....34
UPPER CASING.....37
LOWER CASING & DRIVE 1.....38
LOWER CASING & DRIVE 2.....42
FUEL TANK.....44
STEERING GUIDE.....45
REMOTE CONTROL BOX.....46
REMOTE CONTROL ASSY 1.....47
REMOTE CONTROL ASSY 2.....50
OPTIONAL PARTS.....53
REPAIR KIT 1.....54
REPAIR KIT 2.....55
REPAIR KIT 3.....56

INDEX

NUMERICAL INDEX.....57

CONTENIDO

PARTES DE REPUESTO TEMPORALES..... 1
SOPORTE SUPERIOR..... 2
CYLINDRO & CARTER..... 3
CIGUENAL & PISTON.....5
ADMISION..... 6
CARBURADOR..... 7
COMBUSTIBLE..... 8
ARRANQUE..... 10
GENERADOR.....12
EQUIPO ELECTRICO 1..... 14
EQUIPO ELECTRICO 2..... 15
EQUIPO ELECTRICO 3..... 17
MOTOR DE ARRANQUE..... 18
CUBIERTA INFERIOR..... 19
DIRECCION.....21
FRICCION DE DIRECCION..... 23
CONTROL..... 24
CONJUNTO ADITAMENTO..... 26
SOPORTE 1..... 27
SOPORTE 2..... 30
SOPORTE 3..... 32
COMPONER Y PODER VARILLA.....34
FUNDA SUPERIOR.....37
IMPULSOR E INFERIOR 1..... 38
IMPULSOR E INFERIOR 2..... 42
DEPOSITO DE COMBUSTIBLE..... 44
DIRECCIONGUIAR..... 45
CONTROL REMOTO COMPLETO..... 46
CONTROL REMOTO COMPL 1.....47
CONTROL REMOTO COMPL 2.....50
PARTES OPCIONALES..... 53
ESTUCHE REPARATION 1..... 54
ESTUCHE REPARATION 2..... 55
ESTUCHE REPARATION 3..... 56

INDICE

INDICE NUMERICO..... 57

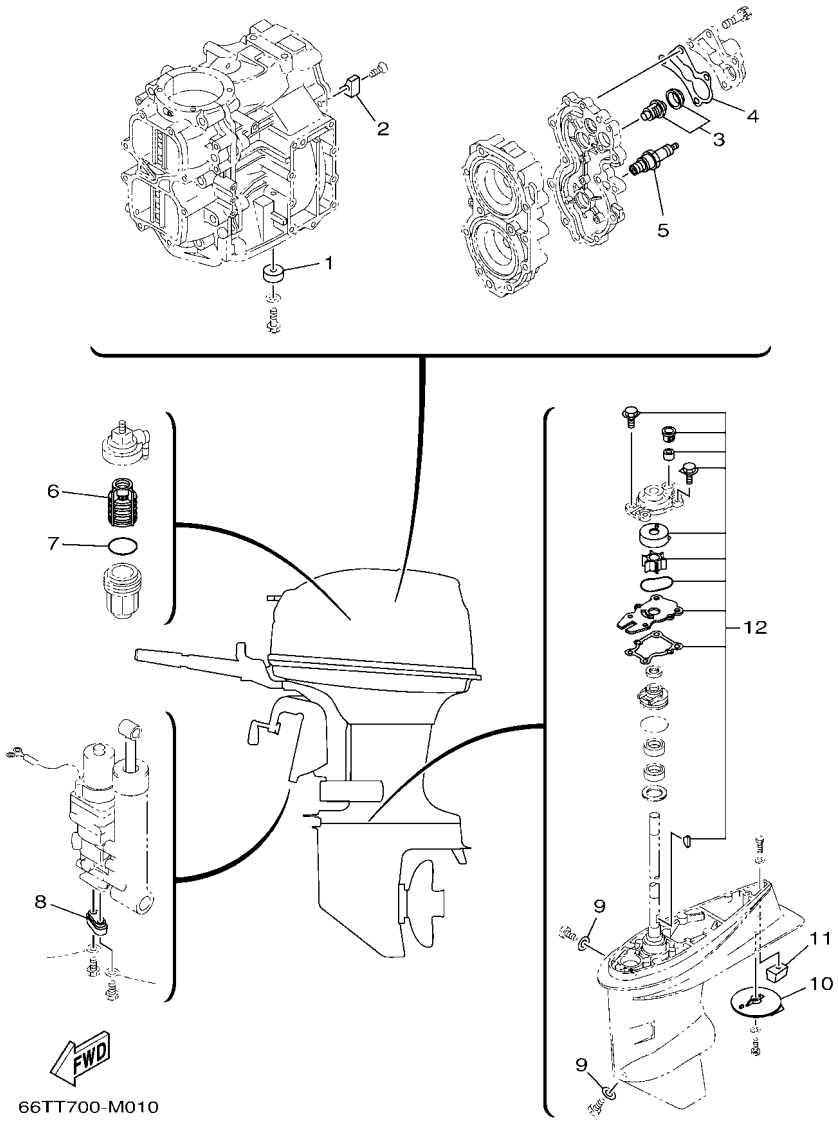

FIG. 1 SCHEDULED SERVICE PARTS — PARTES DE REPUESTO TEMPORALES

REF. NO.	PART NO. CODIGO Nº	DESCRIPTION DESCRIPCION	MH	WH	W	WT		REMARKS OBSERVACIONES
1	676–45251–00	ANODE CATODE	1	1	1	1		
2	676–11325–00	ANODE ANODO	1	1	1	1		
3	6E5–12411–02	THERMOSTAT TERMOSTAT	1	1	1	1		
4	676–12414–A1	GASKET, COVER EMPAQUE	1	1	1	1		
5	94702–00040	PLUG, SPARK (NGK B7HS) BUJIA (NGK B7HS)	2	2	2	2		UR UR
	94702–00272	PLUG, SPARK (NGK BR7HS) BUJIA (NGK BR7HS)	2	2	2	2		UR CAR(CE),CHN,RUS,TWN UR CAR(CE),CHN,RUS,TWN
6	61N–24563–00	ELEMENT, FILTER ELEMENTO DEL FILTRO	1	1	1	1		
7	93210–32738	O-RING ANILLO O	1	1	1	1		
8	65W–45251–00	ANODE CATODE				1		
9	90430–08003	GASKET JUNTA	2	2	2	2		
10	664–45371–01	TAB-TRIM QUILLA ESTABILIZADOR	1	1	1	1		
11	67C–45251–00	ANODE CATODE	1	1	1	1		
12	66T–W0078–00	WATER PUMP REPAIR KIT ESTUCHE REPARACION BOMBA AGUA	1	1	1	1		

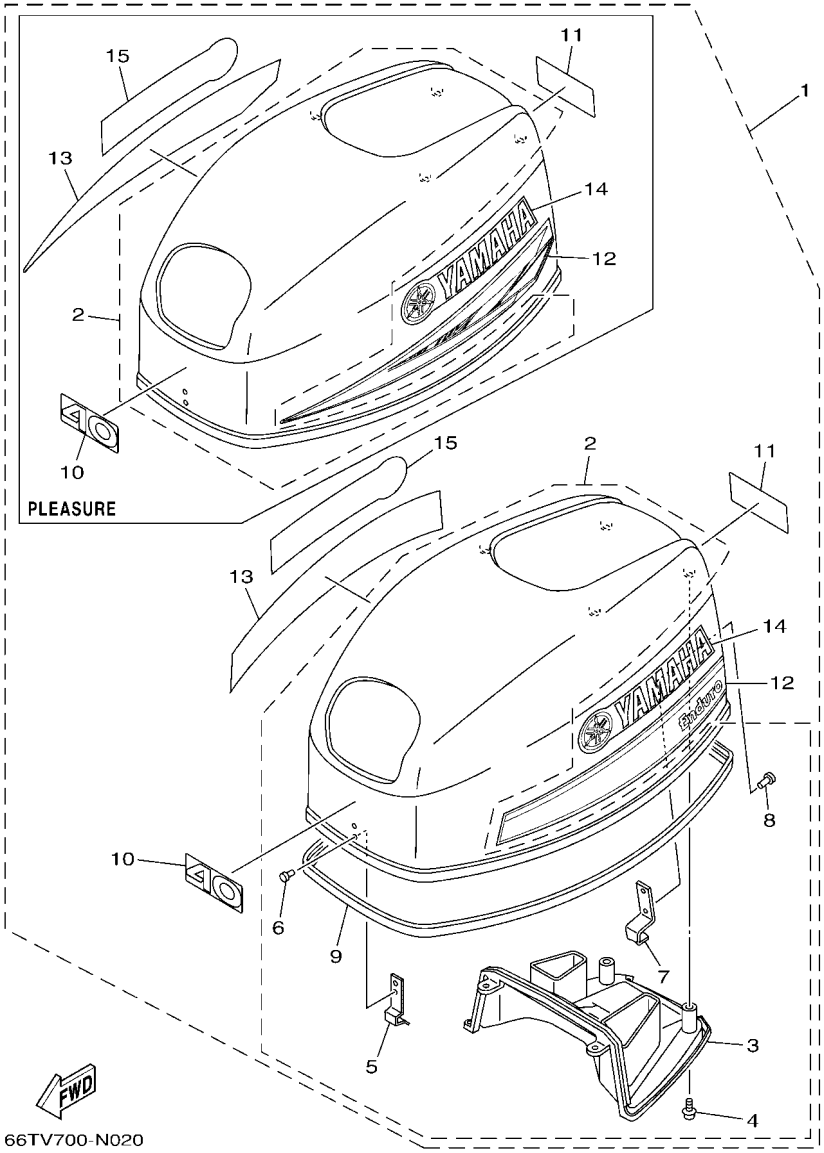

FIG. 2 TOP COWLING — SOPORTE SUPERIOR

REF. NO.	PART NO. CODIGO Nº	DESCRIPTION DESCRIPCION	MH	WH	W	WT		REMARKS OBSERVACIONES
1	66T–42610–30	TOP COWLING ASSY SOPORTE SUPERIOR COMPL.	1	1	1	1		ENDURO ENDURO
	66T–42610–00	TOP COWLING ASSY SOPORTE SUPERIOR COMPL.	1		1	1		PLEASURE PLEASURE
2	66T–4261A–00	.TOP COWLING W/O GRAPHICS .SOPORTE SUPERIOR SIN GRAFICOS	1	1	1	1		
3	66T–42613–01	..MOLDING, AIR DUCT ..MOLDURA CONDUCTO AIRE	1	1	1	1		
4	90167–05017	..SCREW, TAPPING ..TORNILLO DE ROSCA HEMBRA	4	4	4	4		
5	6E0–42651–02	..HOOK ..GANCHO	1	1	1	1		
6	90266–04M04	..RIVET ..REMACHE	2	2	2	2		
7	6F5–42652–01	..HOOK ..GANCHO	1	1	1	1		
8	90266–04M01	..RIVET ..REMACHE	2	2	2	2		
9	66T–42615–02	..SEAL ..SELLO	1	1	1	1		
10	63D–42678–40	.GRAPHIC, REAR .CALCAMONIA TRASERA	1	1	1	1		
11	63D–42678–40	.GRAPHIC, REAR .CALCAMONIA TRASERA	1	1	1	1		
12	61N–42675–40	.GRAPHIC, SIDE 1 .CALCAMONIA LATERAL 1	1	1	1	1		ENDURO ENDURO
	688–42675–50	.GRAPHIC, SIDE 1 .CALCAMONIA LATERAL 1	1		1	1		PLEASURE PLEASURE
13	61N–42676–40	.GRAPHIC, SIDE 2 .CALCAMONIA LATERAL 2	1	1	1	1		ENDURO ENDURO
	688–42676–50	.GRAPHIC, SIDE 2 .CALCAMONIA LATERAL 2	1		1	1		PLEASURE PLEASURE
14	63D–42681–40	.MARK, COWLING .MARCA DE CUBIERTA	1	1	1	1		
15	63D–42681–40	.MARK, COWLING .MARCA DE CUBIERTA	1	1	1	1		

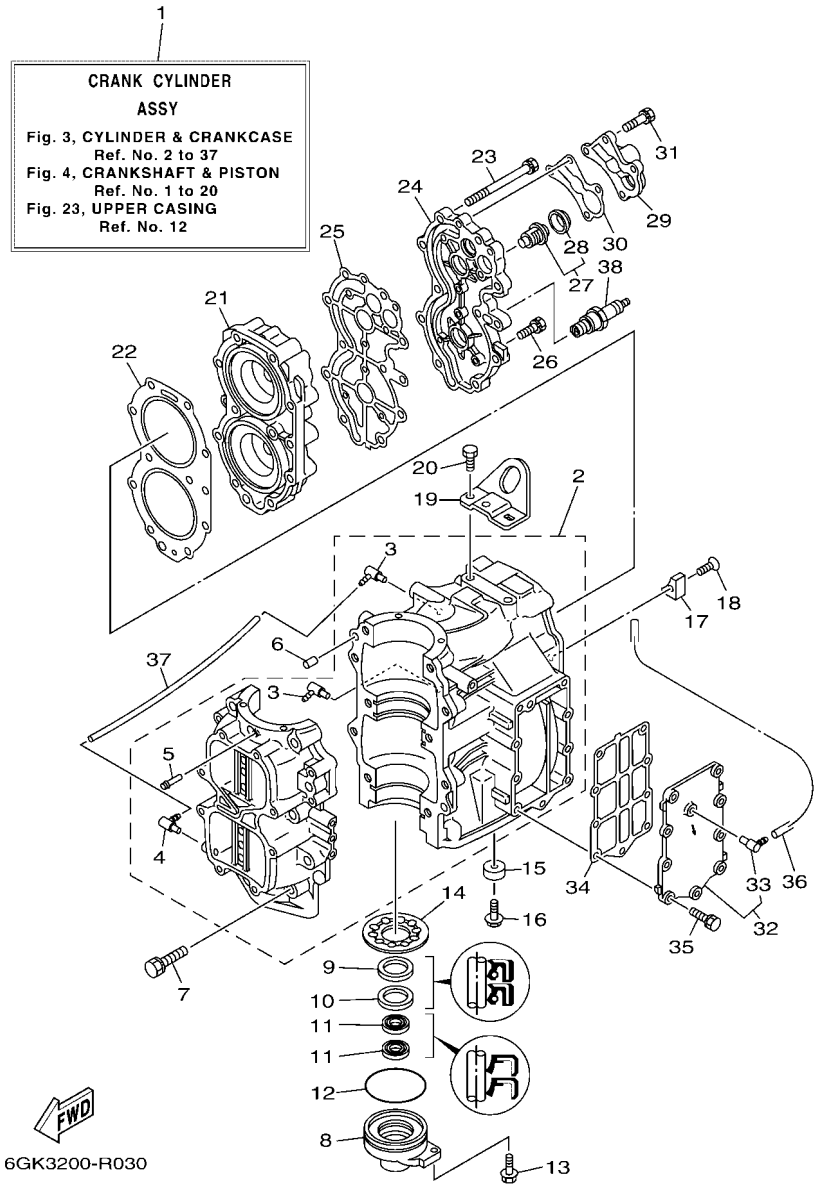

FIG. 3 CYLINDER & CRANKCASE — CYLINDRO & CARTER

REF. NO.	PART NO. CODIGO Nº	DESCRIPTION DESCRIPCION	MH	WH	W	WT		REMARKS OBSERVACIONES
1	66T–W0090–03–1S	CRANK CYLINDER ASSY BLOQUE MOTOR COMPLETO	1	1	1	1		
2	66T–15100–03	CRANKCASE ASSY CARTER COMPLETO	1	1	1	1		
3	6E5–13552–01	.NOZZLE .BOQUILLA	2	2	2	2		
4	6E5–13552–01	.NOZZLE .BOQUILLA	1	1	1	1		
5	624–14485–00	.PIPE, JOINT .TUBO DE UNION	1	1	1	1		
6	93608–12063	PIN, DOWEL PASADOR DE CLAVIJA	2	2	2	2		
7	90119–10005	BOLT, WITH WASHER TORNILLO CON ARANDELA	10	10	10	10		
8	66T–15396–01–CA	HOUSING, OIL SEAL CAJA DE SELLO DE ACEITE	1	1	1	1		
9	93102–30M56	OIL SEAL SELLO ACEITE	1	1	1	1		
10	93101–30M33	OIL SEAL SELLO ACEITE	1	1	1	1		
11	93101–16001	OIL SEAL SELLO ACEITE	2	2	2	2		
12	93210–65M50	O-RING ANILLO O	1	1	1	1		
13	97E95–06520	BOLT, HEXAGON W/W DEEP RECESS TORNILLO HEXAGONAL CON RONDONA	1	1	1	1		
14	66T–11565–00	WASHER, BEARING COVER ARANDELA CUBIERTA DE COJINETE	1	1	1	1		
15	676–45251–00	ANODE CATODE	1	1	1	1		
16	97E95–06516	BOLT, HEXAGON W/W DEEP RECESS TORNILLO HEXAGONAL CON RONDONA	1	1	1	1		
17	676–11325–00	ANODE ANODO	1	1	1	1		
18	90152–06M01	SCREW, COUNTERSUNK TORNILLO EMBUTIDO	1	1	1	1		
19	66T–11119–00	HANGER, ENGINE SOPORTE DEL MOTOR	1	1	1	1		
20	90101–08002	BOLT TORNILLO	2	2	2	2		
21	66T–11111–01–1S	HEAD, CYLINDER 1 CULATA CILINDRO 1	1	1	1	1		
22	66T–11181–A3	GASKET, CYLINDER HEAD 1 JUNTA, DE CULATA 1	1	1	1	1		
23	90119–08MA5	BOLT, WITH WASHER TORNILLO CON ARANDELA	11	11	11	11		
24	66T–11191–00–1S	COVER, CYLINDER HEAD 1 TAPA CULATA DE CILINDRO 1	1	1	1	1		
25	66T–11193–A3	GASKET, HEAD COVER 1 EMPAQUE	1	1	1	1		
26	90119–06MA3	BOLT, WITH WASHER TORNILLO CON ARANDELA	4	4	4	4		
27	6E5–12411–02	THERMOSTAT TERMOSTAT	1	1	1	1		

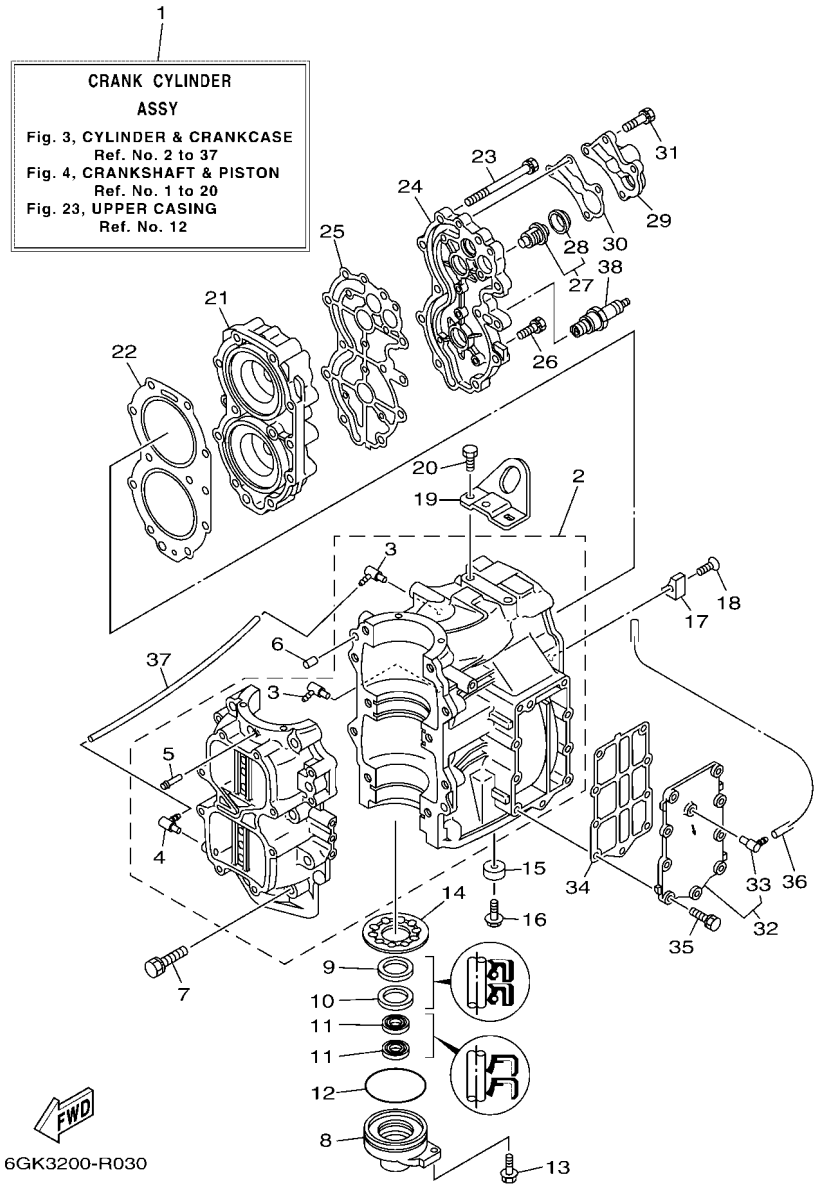

FIG. 3 CYLINDER & CRANKCASE — CYLINDRO & CARTER

REF. NO.	PART NO. CODIGO Nº	DESCRIPTION DESCRIPCION	MH	WH	W	WT		REMARKS OBSERVACIONES
28	6E5–12412–00	.SEAL, THERMOSTAT .SELLO TERMOSTATO	1	1	1	1		
29	676–12413–00–1S	COVER, THERMOSTAT CUBIERTA TERMOSTATO	1	1	1	1		
30	676–12414–A1	GASKET, COVER EMPAQUE	1	1	1	1		
31	90119–06MA5	BOLT, WITH WASHER TORNILLO CON ARANDELA	4	4	4	4		
32	66T–41113–00–1S	OUTER COVER, EXHAUST CUBOERTA EXTERIOR DE ESCAPE	1	1	1	1		
33	676–11372–00	.NIPPLE, HOSE .NIPLE DE MANGUERA	1	1	1	1		
34	66T–41114–A0	GASKET, EXHAUST OUTER COVER EMPAQUE	1	1	1	1		
35	90119–06MA3	BOLT, WITH WASHER TORNILLO CON ARANDELA	9	9	9	9		
36	90445–09M75	HOSE (L370) TUBO (L370)	1	1	1	1		
37	90445–07M08	HOSE (L220) TUBO (L220)	1	1	1	1		
38	94702–00040	PLUG, SPARK (NGK B7HS) BUJIA (NGK B7HS)	2	2	2	2		
	94702–00272	PLUG, SPARK (NGK BR7HS) BUJIA (NGK BR7HS)	2	2	2	2		FOR CAR(CE),CHN,RUS,TWN FOR CAR(CE),CHN,RUS,TWN

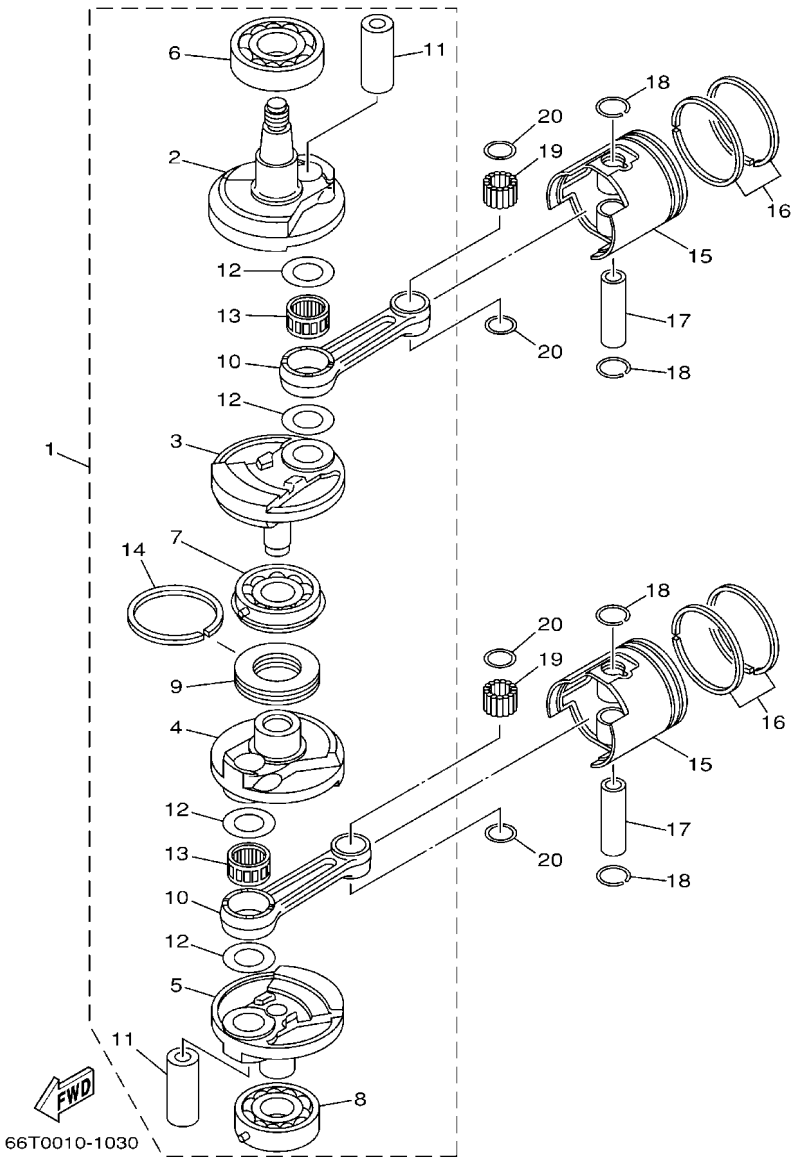

FIG. 4 CRANKSHAFT & PISTON — CIGUENAL & PISTON

REF. NO.	PART NO. CODIGO Nº	DESCRIPTION DESCRIPCION	MH	WH	W	WT		REMARKS OBSERVACIONES
1	66T–11400–01	CRANKSHAFT ASSY CIGUENAL COMPLETO	1	1	1	1		
2	66T–11412–00	.CRANK 1 .MANIVELA 1	1	1	1	1		
3	66T–11422–00	.CRANK 2 .MANIVELA 2	1	1	1	1		
4	66T–11432–00	.CRANK 3 .MANIVELA 3	1	1	1	1		
5	66T–11442–00	.CRANK 4 .MANIVELA 4	1	1	1	1		
6	93306–307U0	.BEARING .COJINETE	1	1	1	1		
7	93332–000UE	.BEARING .COJINETE	1	1	1	1		
8	93306–306V5	.BEARING .COJINETE	1	1	1	1		
9	6F5–11515–00	.SEAL, LABYRINTH 1 .SELLO LABERINTO 1	1	1	1	1		
10	6F5–11651–00	.ROD, CONNECTING .BIELA	2	2	2	2		
11	66T–11681–00	.PIN, CRANK 1 .PASADOR MANIVELA 1	2	2	2	2		
12	90209–27012	.WASHER .ARANDELA DE SEPARACION	4	4	4	4		
13	93310–727U0	.BEARING .COJINETE DE RODILLOS	2	2	2	2		
14	93440–68M03	.CIRCLIP .SEGURO	1	1	1	1		
15	66T–11631–01–93	PISTON (STD) PISTON (NORMA)	2	2	2	2		
	66T–11635–01	PISTON (0.25MM O/S) PISTON (0.25MM O/S)	2	2	2	2		AP AP
	66T–11636–01	PISTON (0.50MM O/S) PISTON (0.50MM O/S)	2	2	2	2		AP AP
16	66T–11603–00	PISTON RING SET (STD) JUEGO DE ANILLOS (NORMA)	2	2	2	2		
	66T–11604–00	PISTON RING SET (0.25MM O/S) JUEGO DE ANILLOS (0.25MM O/S)	2	2	2	2		AP AP
	66T–11605–00	PISTON RING SET (0.50MM O/S) JUEGO DE ANILLOS (0.50MM O/S)	2	2	2	2		AP AP
17	6F5–11633–00	PIN, PISTON PASADOR, PISTON	2	2	2	2		
18	663–11634–00	CLIP, PISTON PIN PRESILLA, BULON DE PISTON	4	4	4	4		
19	93603–21111	PIN, DOWEL PASADOR DE CLAVIJA	56	56	56	56		
20	90201–20417	WASHER, PLATE ARANDELA PLANA	4	4	4	4		

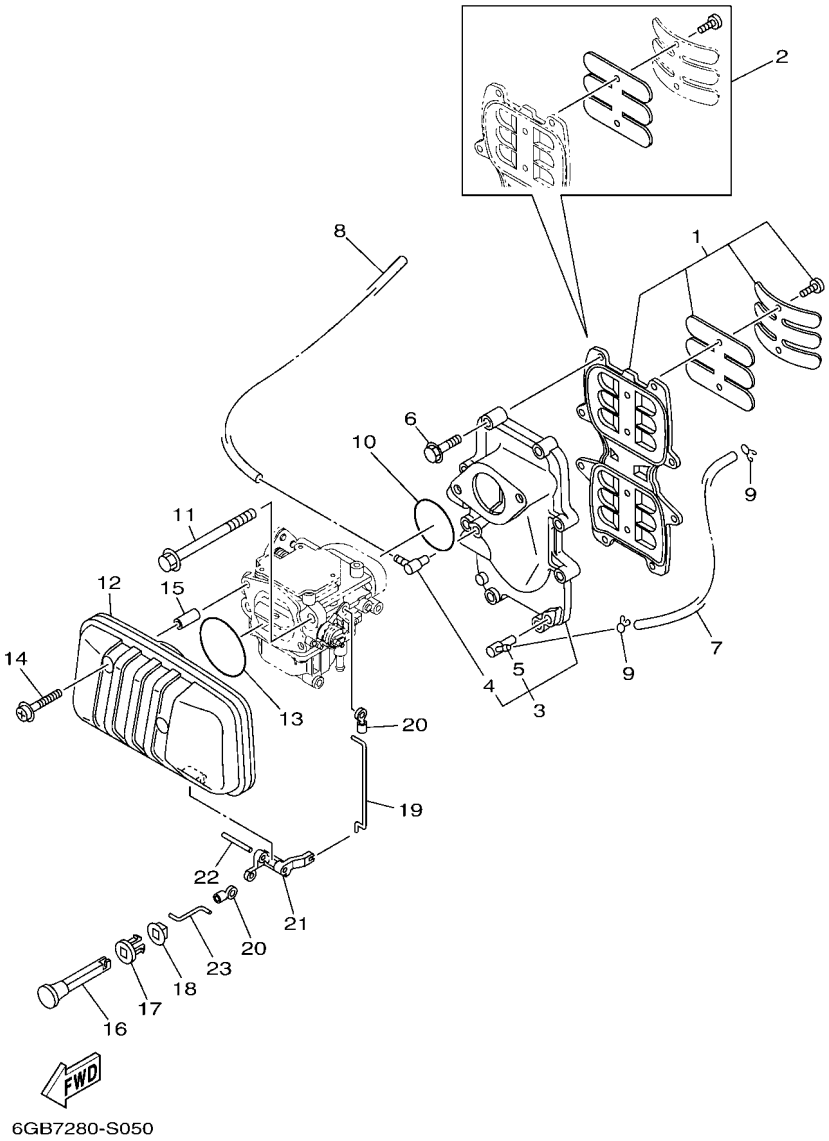

FIG. 5 INTAKE — ADMISION

REF. NO.	PART NO. CODIGO Nº	DESCRIPTION DESCRIPCION	MH	WH	W	WT		REMARKS OBSERVACIONES
1	66T–13610–00	REED VALVE ASSY VALVULA DE LAMINAS COMPLETA	1	1	1	1		
2	66T–W0004–00	.REED SET .JUEGO DE VALVULAS DE LENGUETA	1	1	1	1		
3	66T–13641–03–1S	MANIFOLD, INTAKE 1 CONECTOR DE ADMISSION 1	1	1	1	1		
4	6E5–13552–01	.NOZZLE .BOQUILLA	1	1	1	1		
5	650–11372–01	.NIPPLE, HOSE .NIPLE DE MANGUERA	1	1	1	1		
6	97513–06535	BOLT, WITH WASHER PERNO CON ARANDELA	8	8	8	8		
7	90445–07M24	HOSE (L240) TUBO (L240)	1	1	1	1		
8	90445–07MA4	HOSE (L280) TUBO (L280)	1	1	1	1		
9	90467–06016	CLIP PRESILLA	2	2	2	2		
10	93210–46M16	O-RING ANILLO O	1	1	1	1		
11	90119–08M03	BOLT, WITH WASHER TORNILLO CON ARANDELA	2	2	2	2		
12	66T–14440–10	SILENCER ASSY, INTAKE SILENCIADOR COMPL DE ADMISION	1	1	1	1		
13	93210–54M54	O-RING ANILLO O	1	1	1	1		
14	97985–06240	SCREW, WITH WASHER TORNILLO, CON ARANDELA	2	2	2	2		
15	90387–06M80	COLLAR ESPACIADOR	2	2	2	2		
16	6H4–41271–02	KNOB, CHOKE PERILLA AHOGADOR	1	1	1	1		
17	689–41273–00	GROMMET TAPON PROTECTOR	1	1	1	1		
18	6J8–41274–00	GROMMET 2 TAPON 2	1	1	1	1		
19	66T–41256–00	ROD, CHOKE 1 VARILLA DE AHOGADOR	1	1	1	1		
20	661–41262–02	JOINT, CHOKE LEVER CONECTOR DE AHOGADOR	2	2	2	2		
21	66T–41252–00	LEVER, CHOKE 1 PALANCA AHOGADOR 1	1	1	1	1		
22	91690–40032	PIN, SPRING PASADOR DE RESORTE	1	1	1	1		
23	66T–41257–00	ROD, CHOKE 2 VARILLA DE AHOGADOR	1	1	1	1		

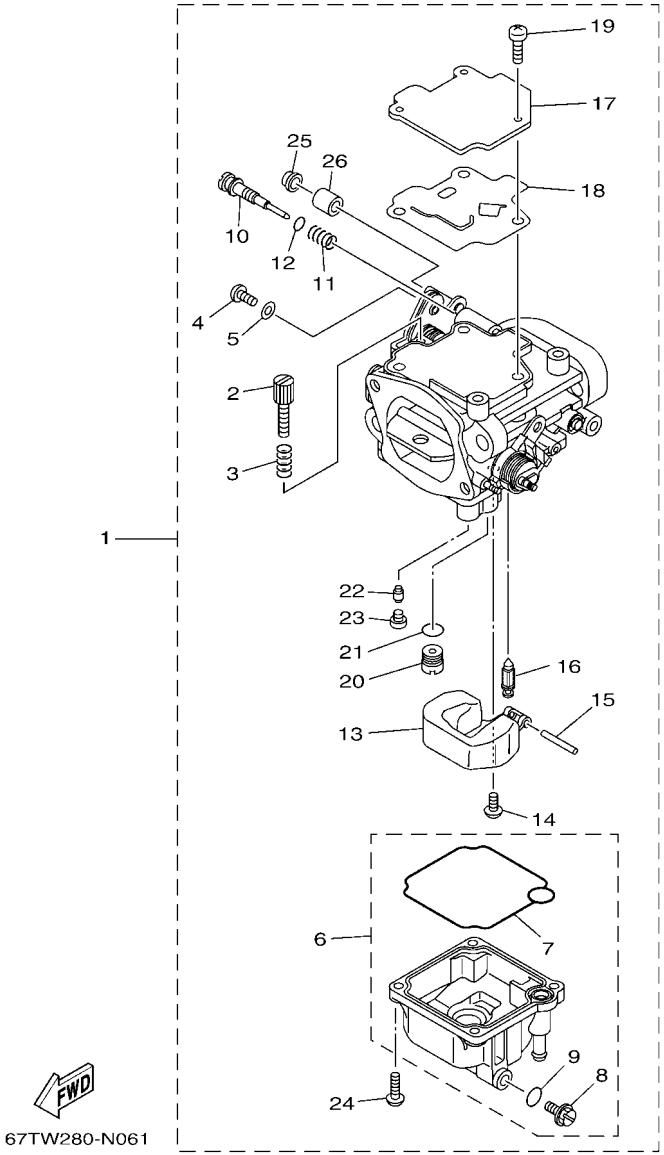

FIG. 6 CARBURETOR — CARBURADOR

REF. NO.	PART NO. CODIGO Nº	DESCRIPTION DESCRIPCION	MH	WH	W	WT		REMARKS OBSERVACIONES
1	66T–14301–60	CARBURETOR ASSY 1 CARBURADOR COMPLETO 1	1	1				
	66T–14301–70	CARBURETOR ASSY 1 CARBURADOR COMPLETO 1			1	1		
2	66T–14523–60	.SCREW, STOP .TORNILLO DE TOPE	1	1	1	1		
3	69W–14212–00	.SPRING, PILOT ADJUSTING .RESORTE DE AJUSTE DE PILOTO	1	1	1	1		
4	97890–05006	.SCREW, PAN HEAD .TORNILLO	1	1	1	1		
5	62Y–14597–00	.WASHER .ARANDELA	1	1	1	1		
6	66T–14981–60	.BODY, FLOAT CHAMBER .CUERPO CAMARA DE BOIA	1	1	1	1		
7	66T–14984–60	..GASKET, FLOAT CHAMBER ..EMPAQUE CAMARA DE BOIA	1	1	1	1		
8	62Y–14383–30	..SCREW, DRAIN ..TORNILLO DE DRENAJE	1	1	1	1		
9	652–14397–00	..O-RING ..ANILLO O	1	1	1	1		
10	66T–14323–60	.SCREW, AIR ADJUSTING .TORNILLO DE AJUSTE DE AIRE	1	1	1	1		
11	62Y–14334–00	.SPRING, AIR ADJUSTING .RESORTE DE AJUSTADOR DE AIRE	1	1	1	1		
12	652–14147–00	.O-RING .ANILLO O	1	1	1	1		
13	66T–14385–60	.FLOAT .BOIA	1	1	1	1		
14	66M–14325–00	.SCREW, PAN HEAD .TORNILLO CABEZA REDONDA	1	1	1	1		
15	6E5–14386–01	.PIN, FLOAT .PASADOR DE BOIA	1	1	1	1		
16	6C5–14546–10	.VALVE, NEEDLE .VALVULA DE AGUJA	1	1	1	1		
17	66T–14527–60	.PLATE .PLACA	1	1	1	1		
18	66T–14536–60	.GASKET .EMPAQUE	1	1	1	1		
19	6C5–14567–00	.SCREW .TORNILLO	3	3	3	3		
20	66T–1492E–83	.JET, MAIN (#165) .INYECTOR, PRINCIPAL	1	1	1	1		
21	62Y–14227–00	.O-RING .ANILLO O	1	1	1	1		
22	6DR–14342–35	.JET, PILOT (#70) .ESPREA DE PILOTO (#70)	1	1	1	1		
23	66M–14355–00	.PLUG .TAPON	1	1	1	1		
24	62Y–14321–00	.SCREW, THROTTLE .TORNILLO DE OBTURADOR	4	4	4	4		
25	6L2–14584–00	.STOPPER .TOPE	1	1	1	1		
26	6L2–14578–01	.COLLAR .COLLAR	1	1	1	1		

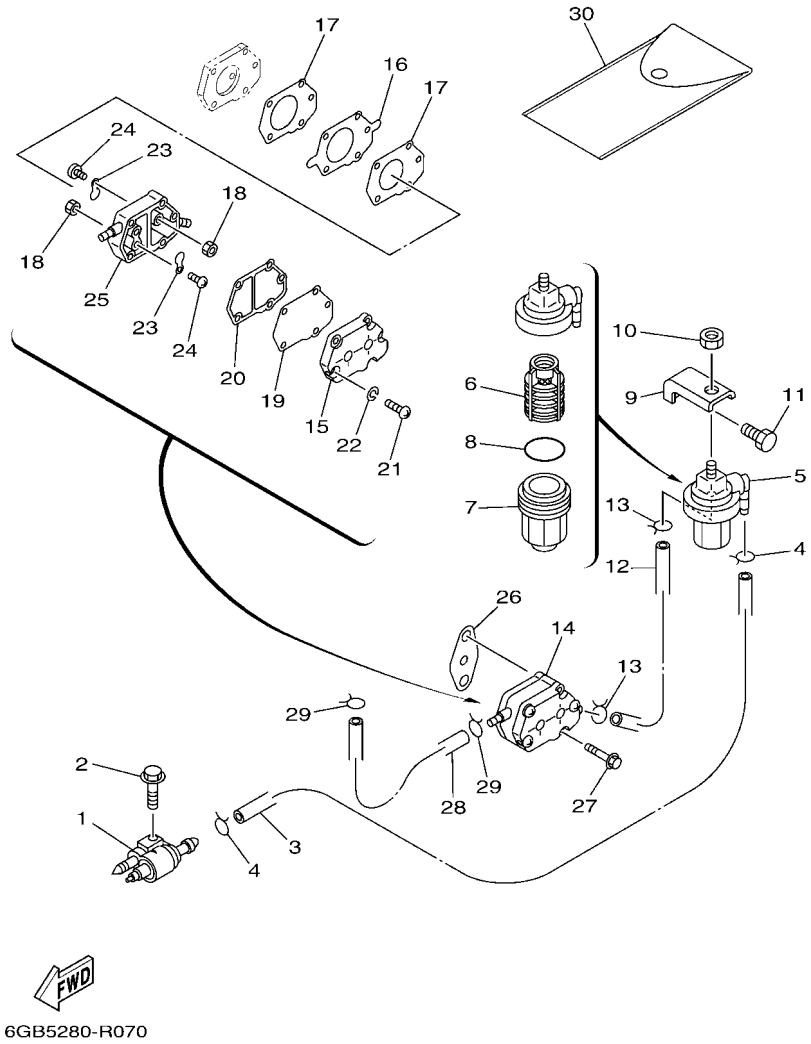

6GB5280-R070

FIG. 7 FUEL — COMBUSTIBLE

REF. NO.	PART NO. CODIGO Nº	DESCRIPTION DESCRIPCION	MH	WH	W	WT		REMARKS OBSERVACIONES
1	6G1–24304–10	FUEL PIPE JOINT COMP. 1 CONECTOR MANGUERA COMBUST.1	1	1	1	1		
2	97E95–06530	BOLT, HEXAGON W/W DEEP RECESS TORNILLO HEXAGONAL CON RONDONA	1	1	1	1		
3	90445–09M08	HOSE (L550) TUBO (L550)	1	1	1	1		
4	90467–08004	CLIP PRESILLA	2	2	2	2		
5	61N–24560–00	FILTER ASSY FILTRO COMPLETO	1	1	1	1		
6	61N–24563–00	.ELEMENT, FILTER .ELEMENTO DEL FILTRO	1	1	1	1		
7	61N–24521–00	.CUP, FILTER .COPA DE FILTRO	1	1	1	1		
8	93210–32738	.O-RING .ANILLO O	1	1	1	1		
9	648–24566–02	BRACKET, FILTER SOPORTE DEL FILTRO	1	1	1	1		
10	95380–08600	NUT TUERCA	1	1	1	1		
11	97013–06014	BOLT PERNO	1	1	1	1		
12	90445–09086	HOSE (L170) TUBO (L170)	1	1	1	1		
13	90467–08004	CLIP PRESILLA	2	2	2	2		
14	692–24410–00	FUEL PUMP ASSY BOMBA DE COMBUSTIBLE COMPLETA	1	1	1	1		
15	6A0–24413–00	.BODY 2 .CUERPO 2	1	1	1	1		
16	692–24411–00	.DIAPHRAGM .DIAFRAGMA	1	1	1	1		
17	648–24434–01	.GASKET, BODY .EMPAQUE	2	2	2	2		
18	95380–03600	.NUT .TUERCA	2	2	2	2		
19	663–24411–00	.DIAPHRAGM .DIAFRAGMA	1	1	1	1		
20	648–24435–02	.GASKET, BODY 2 .EMPAQUE	1	1	1	1		
21	98503–05028	.SCREW, PAN HEAD .TORNILLO DE CABEZA DE CONO ACH	3	3	3	3		
22	92990–05100	.WASHER, SPRING .ARANDELA PLANA	3	3	3	3		
23	6A0–24421–01	.VALVE, CHECK .VALVULA DE RETENCION	2	2	2	2		
24	6A0–14325–00	.SCREW, PAN HEAD .TORNILLO CABEZA REDONDA	2	2	2	2		
25	6A0–24412–02	.BODY 1 .CUERPO 1	1	1	1	1		
26	650–24431–A0	GASKET, FUEL PUMP 1 EMPAQUE BOMBA COMBUST 1	1	1	1	1		
27	97E95–06540	BOLT, HEXAGON W/W DEEP RECESS TORNILLO HEXAGONAL CON RONDONA	2	2	2	2		

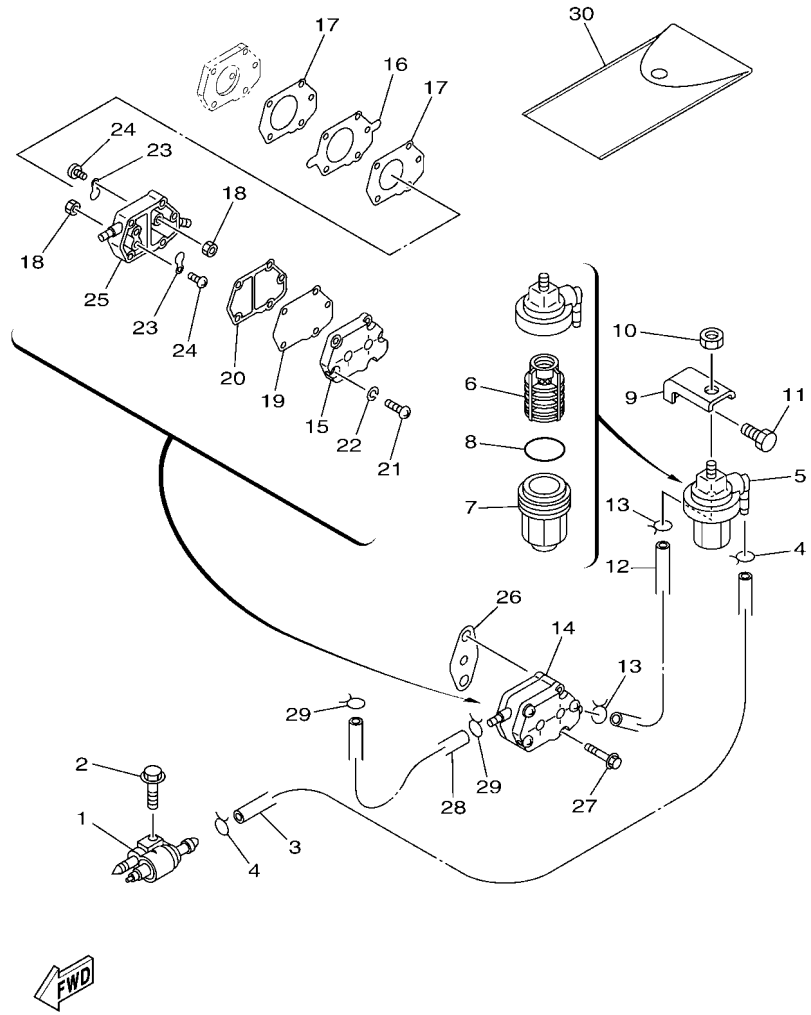

6GB5280-R070

FIG. 7 FUEL — COMBUSTIBLE

REF. NO.	PART NO. CODIGO Nº	DESCRIPTION DESCRIPCION	MH	WH	W	WT		REMARKS OBSERVACIONES
28	90445–09086	HOSE (L170) TUBO (L170)	1	1	1	1		
29	90467–08004	CLIP PRESILLA	2	2	2	2		
30	656–W2810–02	TOOL KIT JUEGO DE HERRAMIENTAS	1	1	1	1		

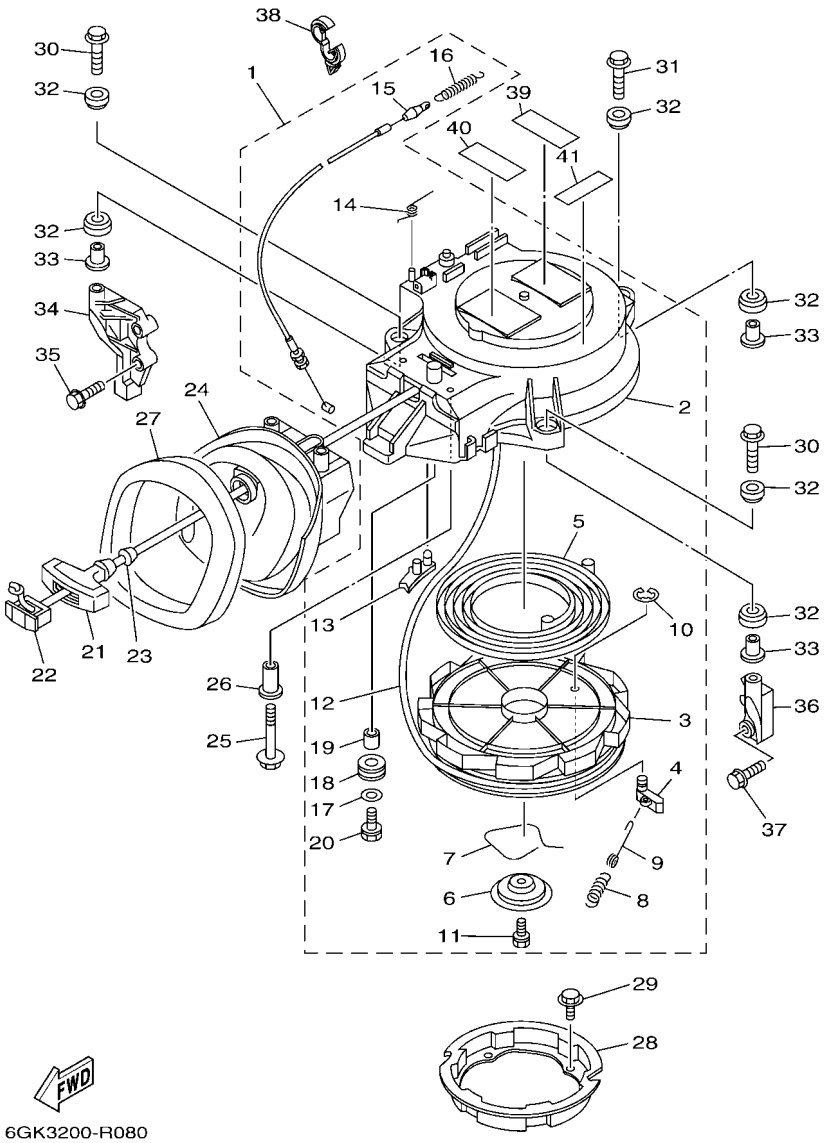

*1:CUT FROM 50M ROLLS,PART NO.90890-44374,CUTTING LENGTH 1.8M
*1:CORTE DE UN RODILLO DE 50M , PARTS NUMERO 90890-44374,
LARGO DEL CORTE 1.8M

FIG. 8 STARTER ARRANQUE

REF. NO.	PART NO. CODIGO Nº	DESCRIPTION DESCRIPCION	MH	WH	W	WT		REMARKS OBSERVACIONES
1	66T–15710–01	STARTER ASSY ARRANQUE COMPLETO	1	1	1	1		
2	66T–15711–01	.CASE, STARTER .CAJA DE ARRANQUE	1	1	1	1		
3	66T–15714–00	.DRUM, SHEAVE .TAMBOR ROLDANA	1	1	1	1		
4	63V–15741–00	.PAWL, DRIVE .TRINQUETE DE TRACCION	1	1	1	1		
5	66T–15713–00	.SPRING, STARTER .RESORTE DE ARRANQUE	1	1	1	1		
6	66T–15716–00	.PLATE, DRIVE .PLACA DE TRACCION	1	1	1	1		
7	66T–15705–00	.SPRING, DRIVE PAWL .RESORTE	1	1	1	1		
8	66T–15767–00	.SPRING .RESORTE	1	1	1	1		
9	66T–15784–00	.SPRING, RETURN .RESORTE DE RETORNO	1	1	1	1		
10	63V–15744–00	.CIRCLIP .SEGURO	1	1	1	1		
11	63V–15768–00	.BOLT .TORNILLO	1	1	1	1		
12	*	.WIRE, STARTER (L:1800MM) .CUERDA DE ARRANQUE (L:1800MM)	1	1	1	1		*1 *1
13	66T–15794–00	.STOPPER .TOPE	1	1	1	1		
14	66T–15734–00	.SPRING, RETURN .RESORTE DE RETORNO	1	1	1	1		
15	66T–15770–00	.CABLE COMP., STARTER STOP .CABLECOMPL DE SEGURO ARRANQUE	1	1	1	1		
16	66T–15731–00	.SPRING, RETURN .RESORTE DE RETORNO	1	1	1	1		
17	6F5–15791–00	.WASHER, LOCK .EMBLEMA	1	1	1	1		
18	6F5–15752–00	.ROLLER, WIRE .RODILLO DE CUERDA	1	1	1	1		
19	6F5–15753–00	.BUSH .BUJE	1	1	1	1		
20	6F5–15768–00	.BOLT .TORNILLO	1	1	1	1		
21	689–15755–01	HANDLE, STARTER MANIJA DE ARRANQUE	1	1	1	1		
22	6F5–15779–02	COVER CUBIERTA	1	1	1	1		
23	697–15789–00	DAMPER AMORTIGUADOR	1	1	1	1		
24	66T–15758–01	GUIDE, WIRE GUIA DE CABLE	1	1	1	1		
25	97E95–06535	BOLT, HEXAGON W/W DEEP RECESS TORNILLO HEXAGONAL CON RONDONA	2	2	2	2		
26	90387–06M66	COLLAR ESPACIADOR	2	2	2	2		
27	66T–15762–01	SEAL, RUBBER 2 SELLO DE GOMA 2	1	1	1	1		

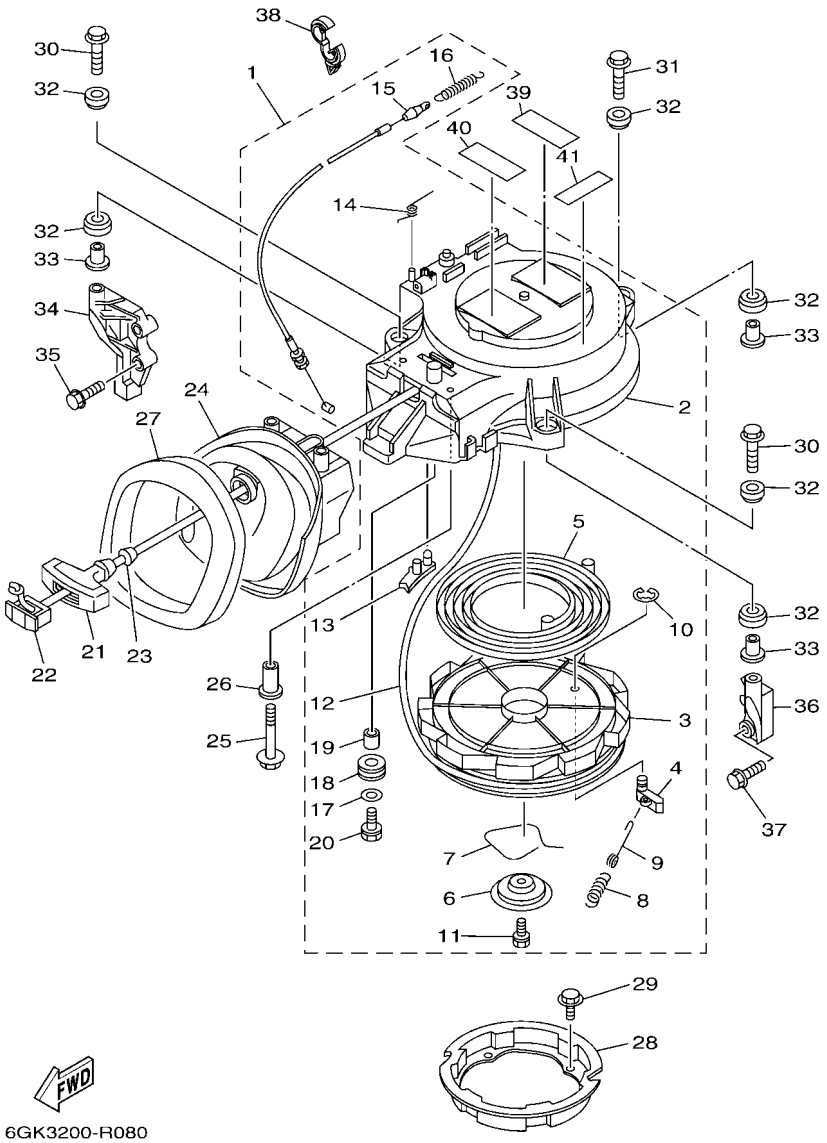

*1:CUT FROM 50M ROLLS,PART NO.90890-44374,CUTTING LENGTH 1.8M
*1:CORTE DE UN RODILLO DE 50M , PARTS NUMERO 90890-44374,
LARGO DEL CORTE 1.8M

FIG. 8 STARTER ARRANQUE

REF. NO.	PART NO. CODIGO Nº	DESCRIPTION DESCRIPCION	MH	WH	W	WT		REMARKS OBSERVACIONES
28	66T–15723–00	PULLEY, STARTER POLEA DE ARRANQUE	1	1	1	1		
29	97E95–06510	BOLT, HEXAGON W/W DEEP RECESS TORNILLO HEXAGONAL CON RONDONA	4	4	4	4		
30	90119–08M10	BOLT, WITH WASHER TORNILLO CON ARANDELA	2	2	2	2		
31	90119–08M51	BOLT, WITH WASHER TORNILLO CON ARANDELA	1	1	1	1		
32	90385–12M04	BUSH BUJE	6	6	6	6		
33	90387–08M05	COLLAR ESPACIADOR	3	3	3	3		
34	66T–15771–00	STAY 1 SOPORTE 1	1	1	1	1		
35	97513–06530	BOLT, WITH WASHER PERNO CON ARANDELA	2	2	2	2		
36	66T–15772–00	STAY 2 SOPORTE 2	1	1	1	1		
37	97513–06530	BOLT, WITH WASHER PERNO CON ARANDELA	2	2	2	2		
38	90464–13249	CLAMP BRIDA		1	1	1		
39	6EE–81994–40	LABEL, SAFETY ETIQUETA DE SEGURIDAD	1	1	1	1		
40	6EE–81995–40	LABEL, WARNING ETIQUETA DE PRECAUCION	1	1	1	1		
41	6AG–81996–00	MARK MARCA			1	1		FOR RUS FOR RUS

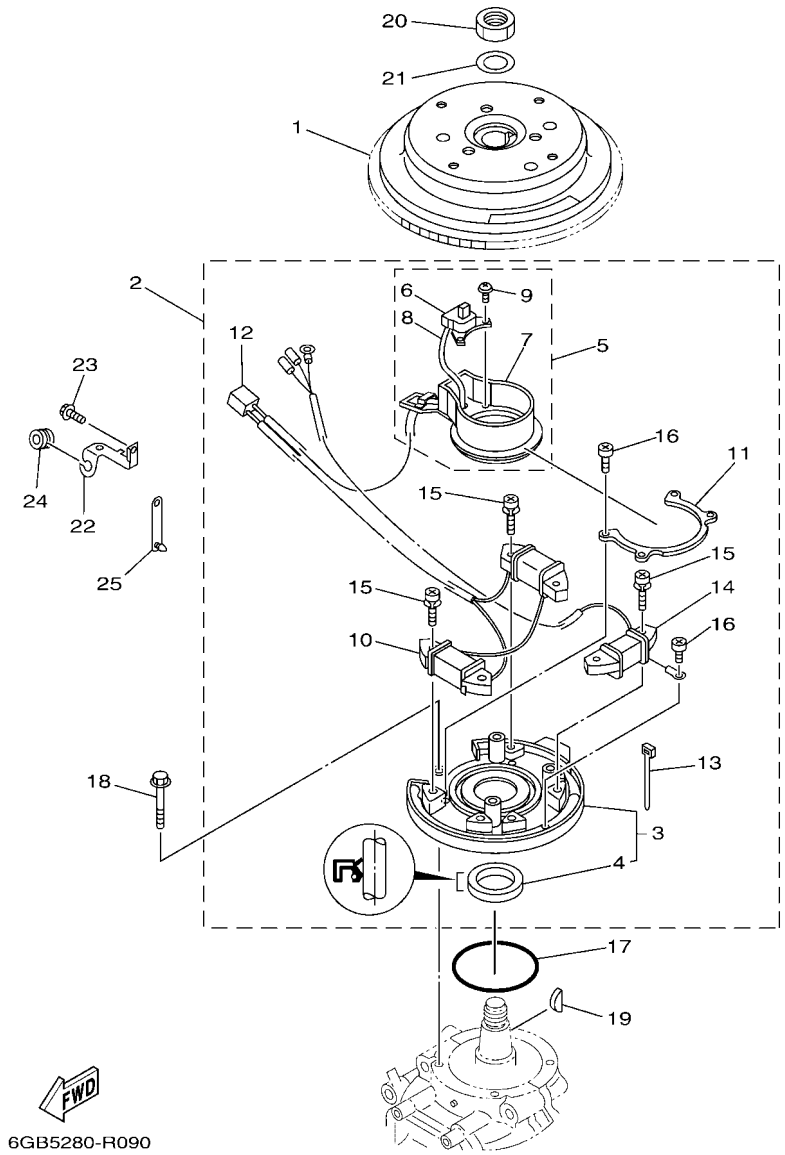

FIG. 9 GENERATOR GENERADOR

REF. NO.	PART NO. CODIGO Nº	DESCRIPTION DESCRIPCION	MH	WH	W	WT		REMARKS OBSERVACIONES
1	66T–85550–00	ROTOR ASSY ROTOR COMPLETO		1	1	1		
	66T–85550–10	ROTOR ASSY ROTOR COMPLETO	1					
2	66T–85560–01	BASE ASSY CONJUNTO BASE	1	1	1	1		MH-RUS,AFR,CAR(CE),VEN MH-RUS,AFR,CAR(CE),VEN
	66T–85560–11	BASE ASSY CONJUNTO BASE	1					
3	66T–85561–00	.BASE, MAGNETO .BASE DE MAGNETO	1	1	1	1		
4	93102–35008	..OIL SEAL ..SELLO ACEITE	1	1	1	1		
5	66T–85580–00	.PULSER COIL ASSY .BOBINA DE PULSACION COMPLETA	1	1	1	1		
6	66T–85596–00	..COIL, PULSER 1 ..BOBINA DE PULSACION 1	1	1	1	1		
7	66T–85582–00	..ATTACHMENT, PULSER ..IMPLEMENTO DE PULSACION	1	1	1	1		
8	66T–85515–00	..LEAD WIRE ASSY ..CABLE CONDUCTOR COMPLETO	1	1	1	1		
9	97902–04108	..SCREW, WITH WASHER ..TORNILLO, CON ARANDELA	2	2	2	2		
10	66T–85520–00	.COIL, CHARGE .BOBINA DE CARGA	1	1	1	1		
11	66T–41611–00	.RETAINER, MAGNETO BASE .RETENEDOR BASE MAGNETO	1	1	1	1		
12	9E471–04305	.CONNECTOR .CONECTOR	1	1	1	1		
13	66T–81328–00	.CLAMP .GRAMPA	1	1	1	1		
14	66T–85533–00	.COIL, LIGHTING .BOBINA DE LUZ	1	1	1	1		FOR 66T-85560-01 FOR 66T-85560-01
15	97902–06125	.SCREW, WITH WASHER .TORNILLO, CON ARANDELA	6	6	6	6		FOR 66T-85560-01 FOR 66T-85560-01
	97902–06125	.SCREW, WITH WASHER .TORNILLO, CON ARANDELA	4					FOR 66T-85560-11 FOR 66T-85560-11
16	97802–04006	.SCREW, PAN HEAD .TORNILLO	5	5	5	5		FOR 66T-85560-01 FOR 66T-85560-01
	97802–04006	.SCREW, PAN HEAD .TORNILLO	4					FOR 66T-85560-11 FOR 66T-85560-11
17	93210–75M51	O-RING ANILLO O	1	1	1	1		
18	97E95–06540	BOLT, HEXAGON W/W DEEP RECESS TORNILLO HEXAGONAL CON RONDONA	4	4	4	4		
19	90280–05015	KEY, WOODRUFF CUNA WOODRUFF	1	1	1	1		
20	90170–20137	NUT TUERCA	1	1	1	1		
21	90201–21M18	WASHER, PLATE ARANDELA PLANA	1	1	1	1		
22	90465–15M74	CLAMP BRIDA	1	1	1	1		
23	97E95–06516	BOLT, HEXAGON W/W DEEP RECESS TORNILLO HEXAGONAL CON RONDONA	1	1	1	1		

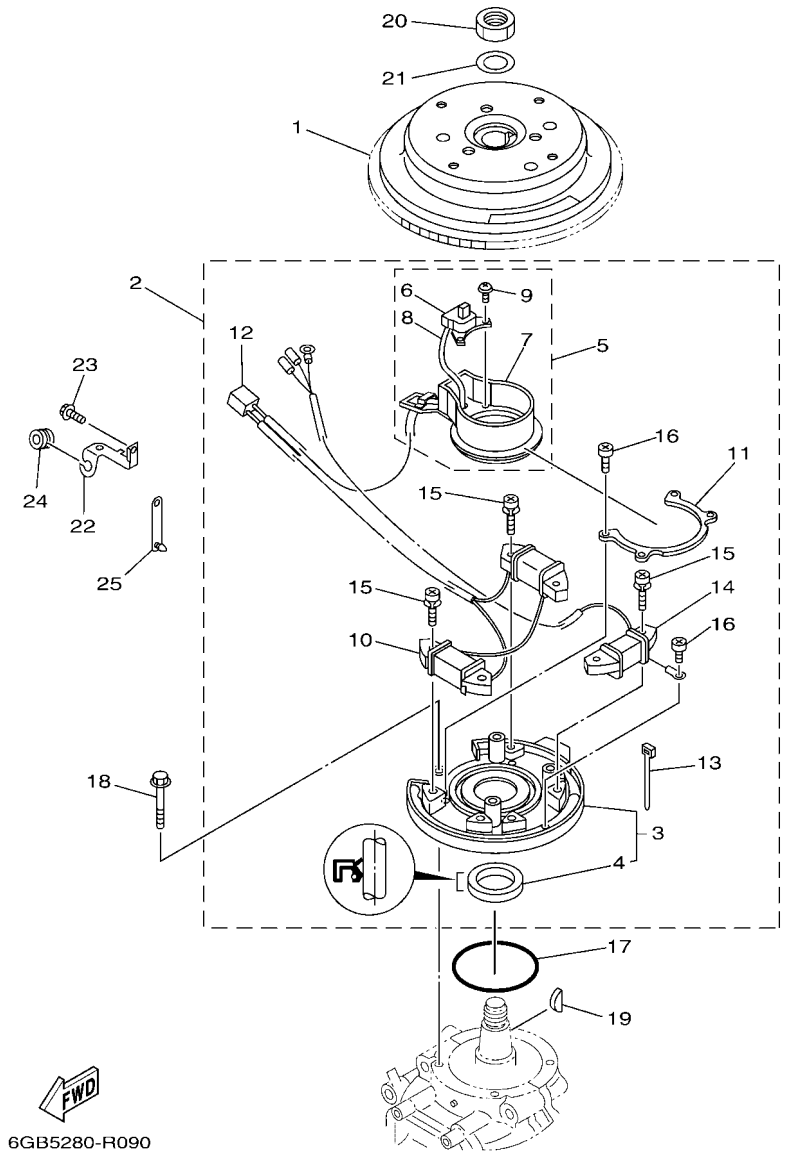

FIG. 9 GENERATOR — GENERADOR

REF. NO.	PART NO. CODIGO Nº	DESCRIPTION DESCRIPCION	MH	WH	W	WT		REMARKS OBSERVACIONES
24	90480–10M71	GROMMET TAPON	1	1	1	1		
25	90464–12M00	CLAMP BRIDA	1	1	1	1		

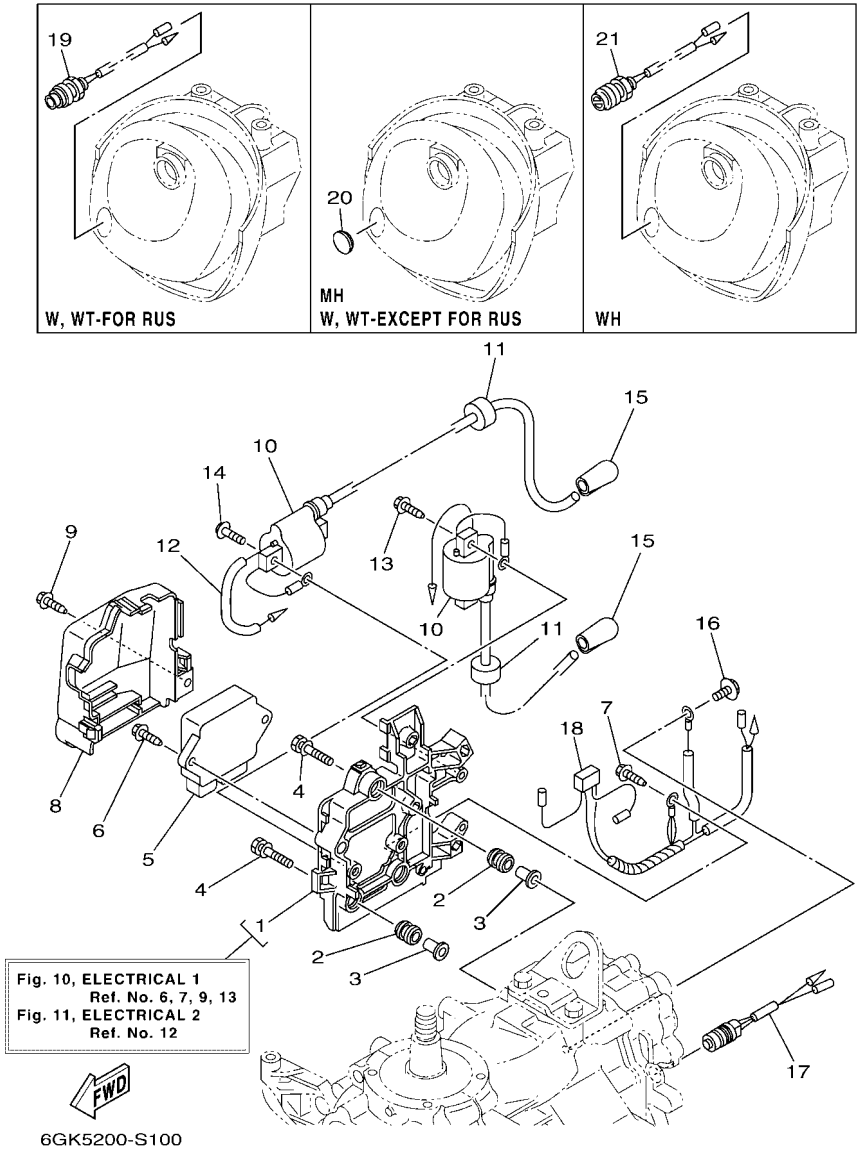

FIG. 10 ELECTRICAL 1 — EQUIPO ELECTRICO 1

REF. NO.	PART NO. CODIGO Nº	DESCRIPTION DESCRIPCION	MH	WH	W	WT		REMARKS OBSERVACIONES
1	66T–8554B–01–94	BRACKET SOPORTE	1	1	1	1		
2	6A0–82317–00	DAMPER, IGNITION COIL AMORTIGUADOR BOBINA ENCENDIDO	3	3	3	3		
3	90387–06119	COLLAR ESPACIADOR	3	3	3	3		
4	90119–06290	BOLT, WITH WASHER TORNILLO CON ARANDELA	3	3	3	3		
5	66T–85540–02	C.D.I. UNIT ASSY UNIDAD C.D.I. COMPLETA	1	1	1	1		
6	90109–06M81	BOLT PERNO	2	2	2	2		
7	90109–06M80	BOLT PERNO	1	1	1	1		
8	66T–81916–01	COVER, TERMINAL CUBIERTA DE TERMINAL	1	1	1	1		
9	90109–06M81	BOLT PERNO	1	1	1	1		
10	66T–85570–00	IGNITION COIL ASSY BOBINA DE IGNICION COMPLETO	2	2	2	2		
11	90480–25161	GROMMET TAPON	2	2	2	2		
12	90446–03MA3	HOSE TUBO RESEIRADERO	1	1	1	1		
13	90109–06M81	BOLT PERNO	2	2	2	2		
14	97E95–06525	BOLT, HEXAGON W/W DEEP RECESS TORNILLO HEXAGONAL CON RONDONA	2	2	2	2		
15	66T–82370–00	PLUG CAP ASSY TAPON DE BUJIA COMPLT	2	2	2	2		
	6E3–82370–21	PLUG CAP ASSY TAPON DE BUJIA COMPLT	2		2	2		FOR CAR(CE),RUS FOR CAR(CE),RUS
16	97E95–06512	BOLT, HEXAGON W/W DEEP RECESS TORNILLO HEXAGONAL CON RONDONA	1	1	1	1		
17	688–82560–10	THERMO SWITCH ASSY INTER. DE TERMO	1	1	1	1		
18	66T–82519–00	WIRE, EARTH LEAD CABLE CONDUCTOR A TIERRA	1	1				
19	6GK–82550–00	ENGINE STOP SWITCH ASSY INTERRUP. DE PARADA COMPLETO			1	1		FOR RUS FOR RUS
20	6G1–42725–00	GROMMET TAPON	1		1	1		W,WT-EXCEPT FOR RUS W,WT-EXCEPT FOR RUS
21	689–81870–00	STARTING SWITCH ASSY INTERRUPTOR DE ARRANQUE COMPL.		1				

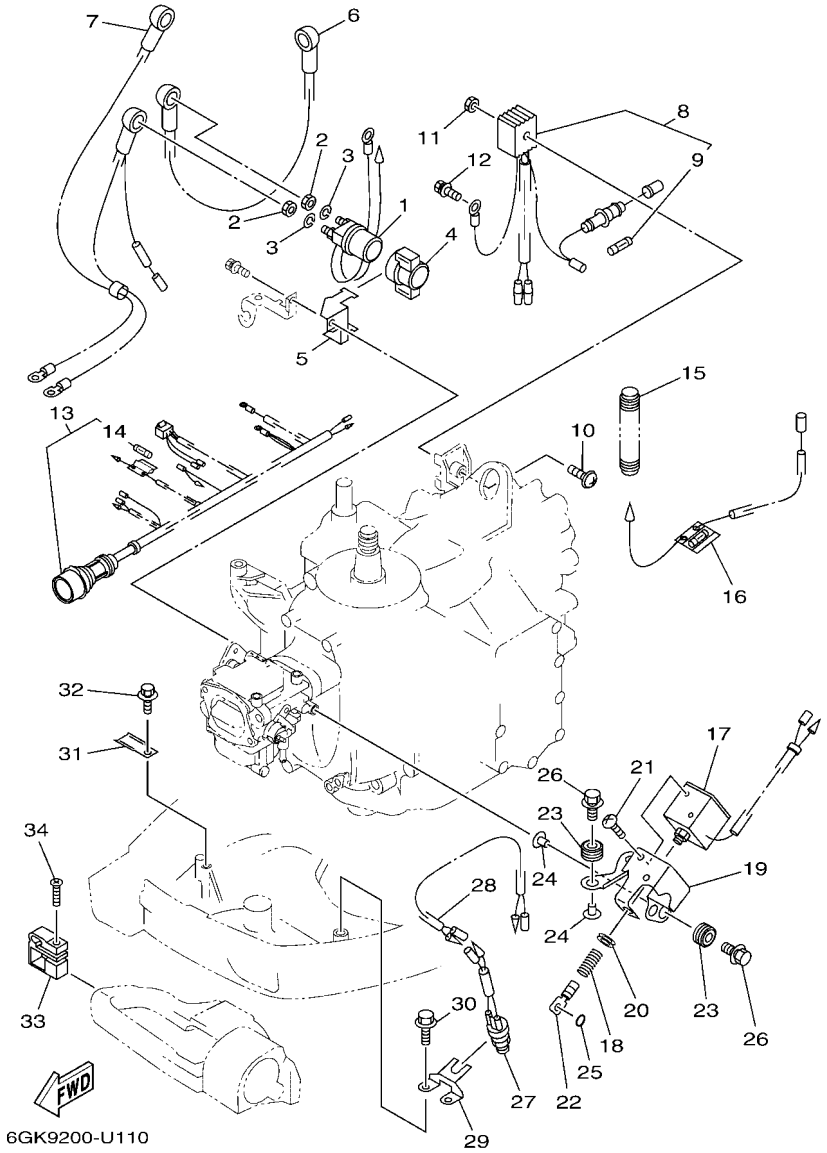

FIG. 11 ELECTRICAL 2 — EQUIPO ELECTRICO 2

REF. NO.	PART NO. CODIGO Nº	DESCRIPTION DESCRIPCION	MH	WH	W	WT		REMARKS OBSERVACIONES
1	6G1–8194A–10	RELAY RELE		1	1	1		
2	90170–06M30	NUT TUERCA		2	2	2		
3	90204–06M00	WASHER, SPRING ARANDELA DE RESORTE		2	2	2		
4	6G1–81952–00	HOLDER, RELAY SOSTEN DE RELE		1	1	1		
5	6L2–81945–00	PLATE, SWITCH FITTING PLACA ACCESORIA DE INTERRUP.		1	1			
6	6E5–82117–01	WIRE, LEAD CABLE CONDUCTOR		1	1	1		
7	66T–82105–01	BATTERY CABLE CABLE DE BATERIA		1	1	1		
8	6G1–81970–63	RECTIFIER ASSY RECTIFICADOR COMPLETO		1	1	1		
9	6G1–82151–01	.FUSE (10A) .FUSIBLE (10A)		1	1	1		
10	97980–05230	SCREW, WITH WASHER TORNILLO, CON ARANDELA		1	1	1		
11	95380–05600	NUT TUERCA		1	1	1		
12	90109–06M80	BOLT PERNO		1	1	1		
13	66T–82590–01	WIRE HARNESS ASSY CONJUNTO DE CABLES			1			
	6GK–82590–01	WIRE HARNESS ASSY CONJUNTO DE CABLES			1			FOR RUS FOR RUS
14	6G1–82151–01	.FUSE (10A) .FUSIBLE (10A)			1			
15	66T–83557–00	TUBE (I.DIA:13MM) ENCHUFE DE ACEITE (I.DIA:13MM)		1	1			
	6N7–83557–00	TUBE (I.DIA:22MM) ENCHUFE DE ACEITE (I.DIA:22MM)				1		
	6N7–83557–00	TUBE (I.DIA:22MM) ENCHUFE DE ACEITE (I.DIA:22MM)			1			FOR RUS FOR RUS
16	66T–82115–01	WIRE, PLUS LEAD CABLE CONDUCTOR POSITIVO		1				
17	6J4–86111–00	COIL, SOLENOID CONJUNTO BOBINA SOLENOIDE			1	1		
18	6J4–86116–00	WIRE, PULL ALAMBRE-JALADOR			1	1		
19	66T–86112–00	STAY, SOLENOID SOPORTE SOLENOIDE			1	1		
20	90480–10155	GROMMET TAPON			1	1		
21	97880–05008	SCREW, PAN HEAD TORNILLO DE CABEZA CON PLANA			4	4		
22	682–86117–00	HOOK, WIRE PULL GANCHO JALADOR DE ALAMBRE			1	1		
23	90480–10M23	GROMMET TAPON			3	3		
24	90387–06289	COLLAR ESPACIADOR			3	3		

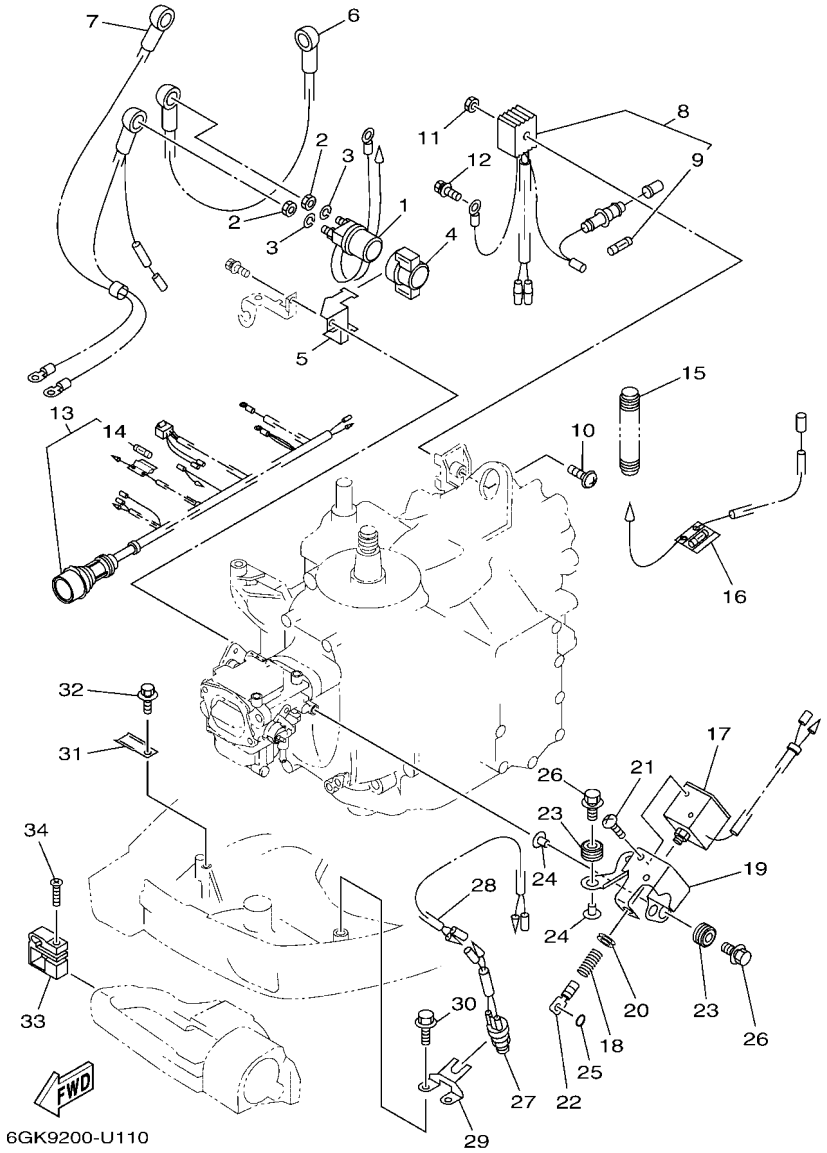

FIG. 11 ELECTRICAL 2 — EQUIPO ELECTRICO 2

REF. NO.	PART NO. CODIGO Nº	DESCRIPTION DESCRIPCION	MH	WH	W	WT		REMARKS OBSERVACIONES
25	93210–03261	O-RING ANILLO O			1	1		
26	90119–06311	BOLT, WITH WASHER TORNILLO CON ARANDELA			3	3		
27	6F5–82540–01	NEUTRAL SWITCH ASSY INTERRUPTOR NEUTRAL COMPL		1				
28	66T–82553–00	EXTENSION, WIRE LEAD CABLE		1				
29	66T–82554–00	STAY, NEUTRAL SWITCH SOPORTE INTERRUPTOR DE NEUTRAL		1				
30	90109–06M86	BOLT PERNO		2				
31	90462–20007	CLAMP BRIDA		1	1	1		
32	90109–06M86	BOLT PERNO		1	1	1		
33	65W–82594–00	CLAMP GRAMPA		1				
34	90161–06M00	SCREW, TAPPING TORNILLO DE CABEZA PLANA		1				

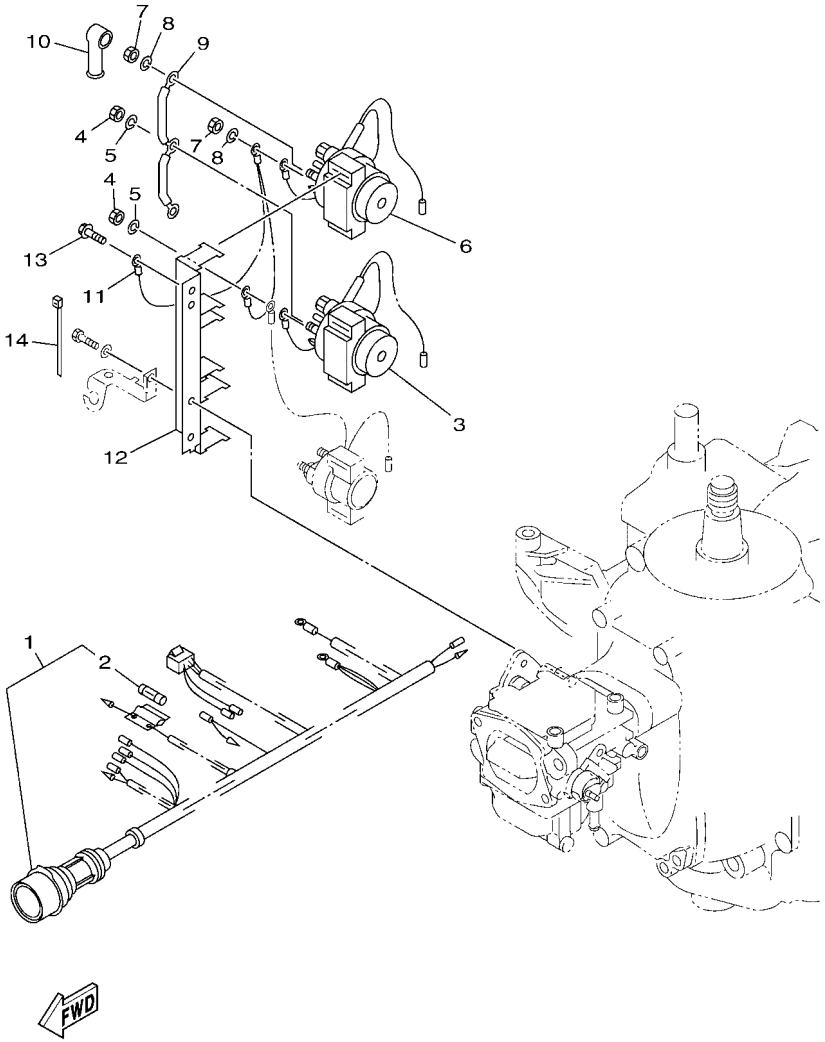

6GK9200-U120

FIG. 12 ELECTRICAL 3 — EQUIPO ELECTRICO 3

REF. NO.	PART NO. CODIGO Nº	DESCRIPTION DESCRIPCION	MH	WH	W	WT		REMARKS OBSERVACIONES
1	66T–82590–21	WIRE HARNESS ASSY CONJUNTO DE CABLES				1		
	6GK–82590–11	WIRE HARNESS ASSY CONJUNTO DE CABLES				1		FOR RUS FOR RUS
2	6G1–82151–01	.FUSE (10A) .FUSIBLE (10A)				1		
3	6E5–8195B–01	RELAY ASSY RELE COMPLETO				1		
4	90170–06M30	NUT TUERCA				3		
5	90204–06M00	WASHER, SPRING ARANDELA DE RESORTE				3		
6	6E5–8195C–01	RELAY ASSY RELE COMPLETO				1		
7	90170–06M30	NUT TUERCA				3		
8	90204–06M00	WASHER, SPRING ARANDELA DE RESORTE				3		
9	66T–87149–00	CONNECTOR CONECTOR				1		
10	6G5–82119–00	COVER, LEAD WIRE CUBIERTA DE CABLE CONDUCTOR				4		
11	6E5–82116–01	WIRE, MINUS LEAD CABLE CONDUCTOR NEGATIVO				1		
12	66T–81948–00	BRACKET SOPORTE				1		
13	97E95–06516	BOLT, HEXAGON W/W DEEP RECESS TORNILLO HEXAGONAL CON RONDONA				1		
14	90465–11M10	CLAMP BRIDA				1		

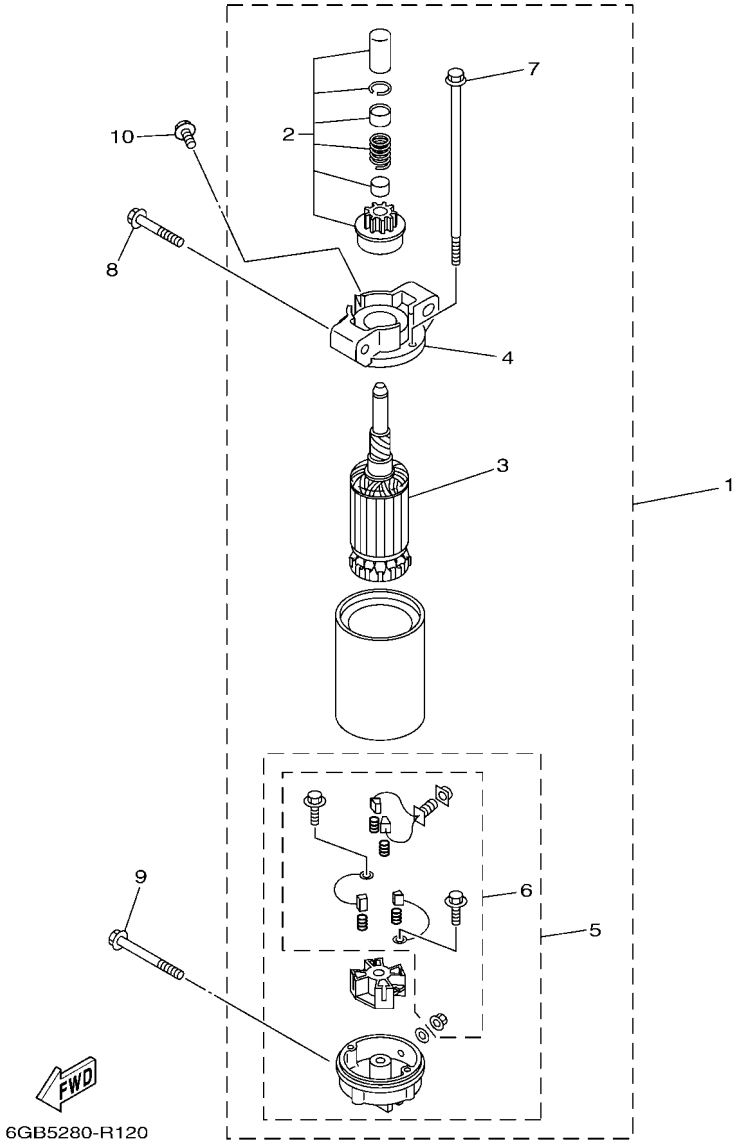

FIG. 13 STARTING MOTOR — MOTOR DE ARRANQUE

REF. NO.	PART NO. CODIGO Nº	DESCRIPTION DESCRIPCION	MH	WH	W	WT		REMARKS OBSERVACIONES
1	66T–81800–04	STARTING MOTOR ASSY MOTOR DE ARRANQUE COMPLETO		1	1	1		
2	66T–81857–11	.PINION STOPPER SET .JUEGO TAPON PINON		1	1	1		
3	66T–81850–01	.ARMATURE ASSY .INDUCIDO COMPLETO		1	1	1		
4	66T–81830–00	.FRONT BRACKET ASSY .SOPORTE DELANTERO COMPLETO		1	1	1		
5	66T–81820–00	.REAR BRACKET ASSY .CUBIERTA TRASERA COMPL		1	1	1		
6	66T–81840–00	..BRUSH HOLDER ASSY ..SOSTEN DE ESCOBILLA COMPLETO		1	1	1		
7	66T–81826–00	.BOLT .PERNO		2	2	2		
8	90119–08M39	BOLT, WITH WASHER TORNILLO CON ARANDELA		2	2	2		
9	90119–08M52	BOLT, WITH WASHER TORNILLO CON ARANDELA		1	1	1		
10	97E95–08516	BOLT, HEXAGON W/W DEEP RECESS TORNILLO HEXAGONAL CON RONDONA		1	1	1		

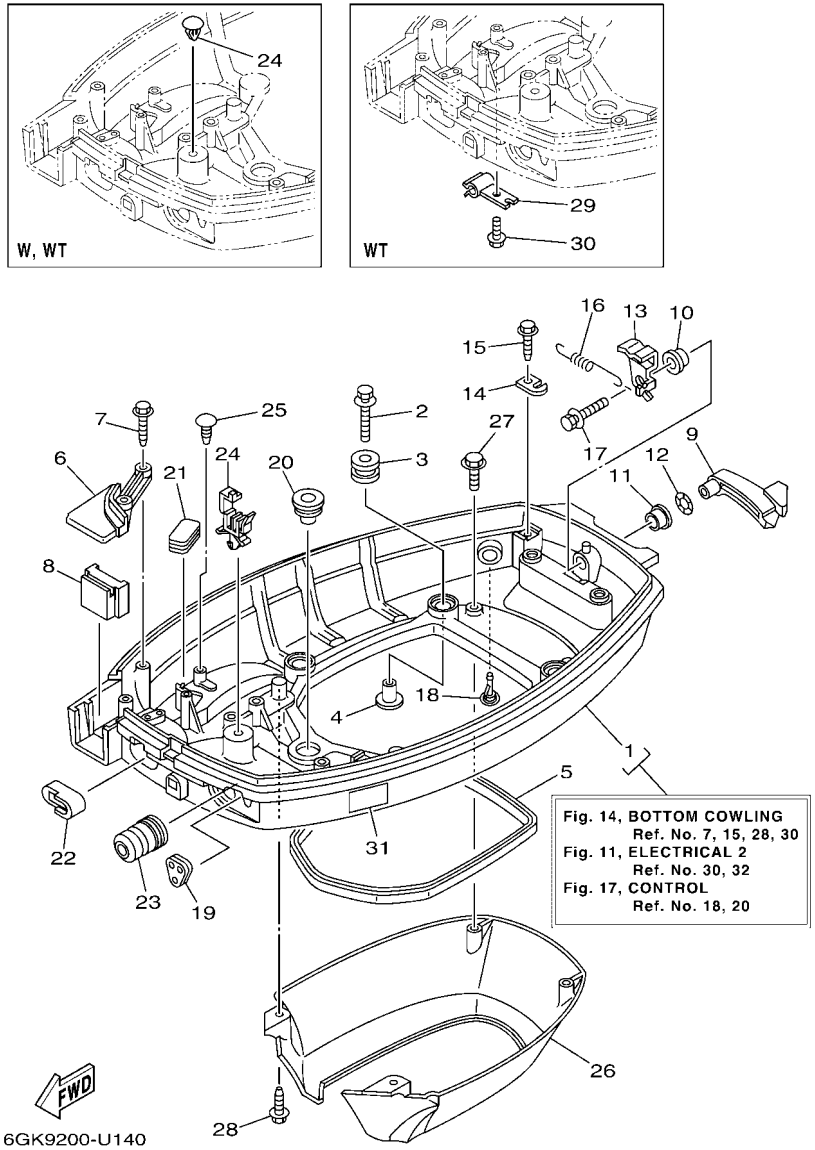

FIG. 14 BOTTOM COWLING — CUBIERTA INFERIOR

REF. NO.	PART NO. CODIGO Nº	DESCRIPTION DESCRIPCION	MH	WH	W	WT		REMARKS OBSERVACIONES
1	66T–42710–01–8D	BOTTOM COWLING ASSY CUBIERTA INFERIOR COMPL.	1	1	1	1		
2	90119–06291	BOLT, WITH WASHER TORNILLO CON ARANDELA	4	4	4	4		
3	90480–09M21	GROMMET TAPON	4	4	4	4		
4	90387–06M41	COLLAR ESPACIADOR	4	4	4	4		
5	66T–42716–00	RUBBER SEAL 1 SELLO DE GOMA 1	1	1	1	1		
6	66T–42738–00–CA	PLATE, FITTING PLACA DE AJUSTE	1	1	1	1		
7	90109–06M81	BOLT PERNO	2	2	2	2		
8	66T–42725–00	GROMMET TAPON	1					
	66T–42725–10	GROMMET TAPON		1				
	66T–42725–20	GROMMET TAPON			1	1		
9	66T–42815–01–8D	LEVER, CLAMP 1 PALANCA ABRAZADERA 1	1	1	1	1		
10	90386–12M37	BUSH BUJE	1	1	1	1		
11	90386–12MA2	BUSH BUJE	1	1	1	1		
12	90206–12052	WASHER, WAVE ARANDELA ONDULADA	1	1	1	1		
13	66T–42816–00	LEVER, CLAMP 2 PALANCA ABRAZADERA 2	1	1	1	1		
14	66T–43144–00	HOOK, SPRING GANCHO	1	1	1	1		
15	90109–06M86	BOLT PERNO	1	1	1	1		
16	90506–16M34	SPRING, TENSION RESORTE DE TENSION	1	1	1	1		
17	90119–06273	BOLT, WITH WASHER TORNILLO CON ARANDELA	1	1	1	1		
18	6E5–44391–00	NIPPLE, HOSE NIPLE MANGUERA	1	1	1	1		
19	65W–26326–00	GROMMET TAPON PROTECTOR	1	1				
	65W–26326–10	GROMMET TAPON PROTECTOR			1	1		
20	676–42727–00	GROMMET TAPON	1	1	1	1		
21	6H4–42726–00	GROMMET TAPON	1	1	1			
	6H1–42726–10	GROMMET TAPON				1		
22	66T–24329–00	SEAL SELLO	1	1	1	1		
23	65W–42726–00	GROMMET TAPON	1	1				

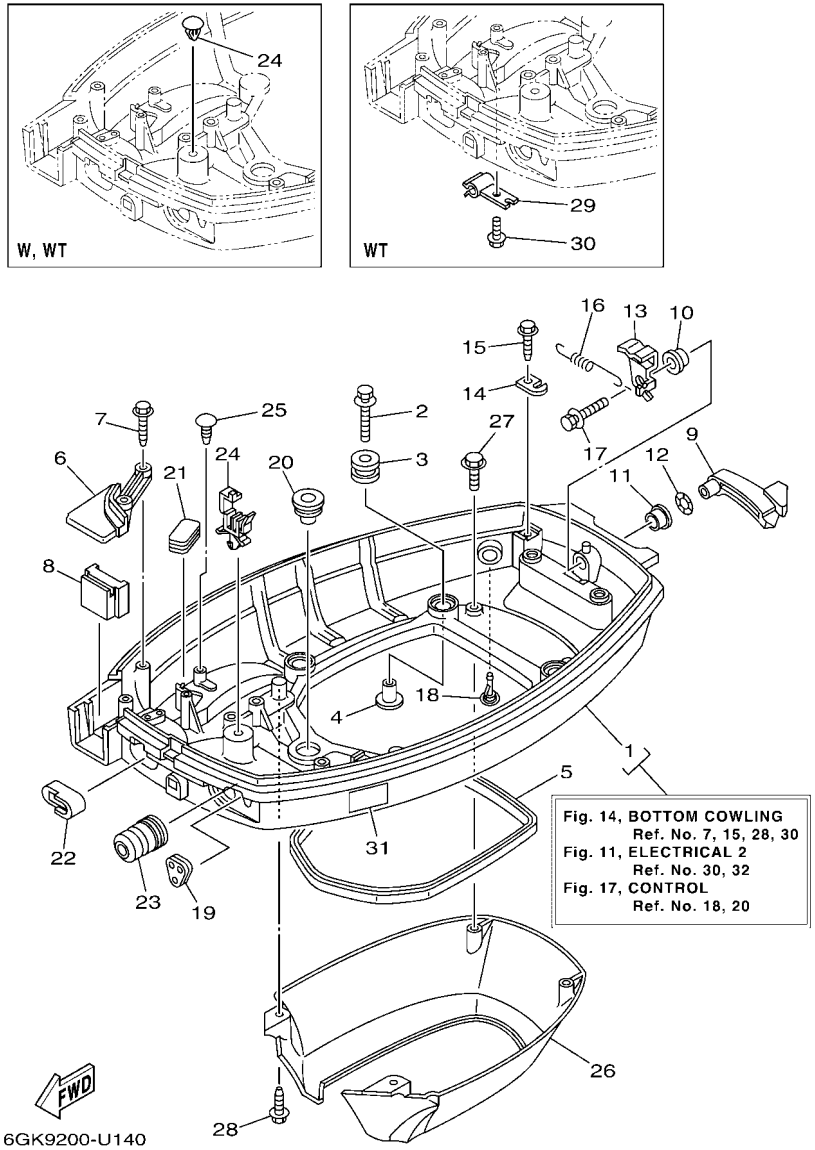

FIG. 14 BOTTOM COWLING — CUBIERTA INFERIOR

REF. NO.	PART NO. CODIGO Nº	DESCRIPTION DESCRIPCION	MH	WH	W	WT		REMARKS OBSERVACIONES
23	65W–42726–10	GROMMET TAPON			1	1		
24	90465–25M57	CLAMP BRIDA	1	1				
	90338–07M00	PLUG TAPON			1	1		
25	90338–05M03	PLUG TAPON	1	1	1			
26	66T–42741–00	APRON MANDIL	1	1	1	1		
27	97E95–06516	BOLT, HEXAGON W/W DEEP RECESS TORNILLO HEXAGONAL CON RONDONA	2	2	2	2		
28	90109–06M80	BOLT PERNO	2	2	2	2		
29	90464–09M49	CLAMP BRIDA				1		
30	90109–06M80	BOLT PERNO				1		
31	6EE–42794–40	LABEL, WARNING (GENERAL) ETIQUETA DE PRECAUCION	1	1	1	1		

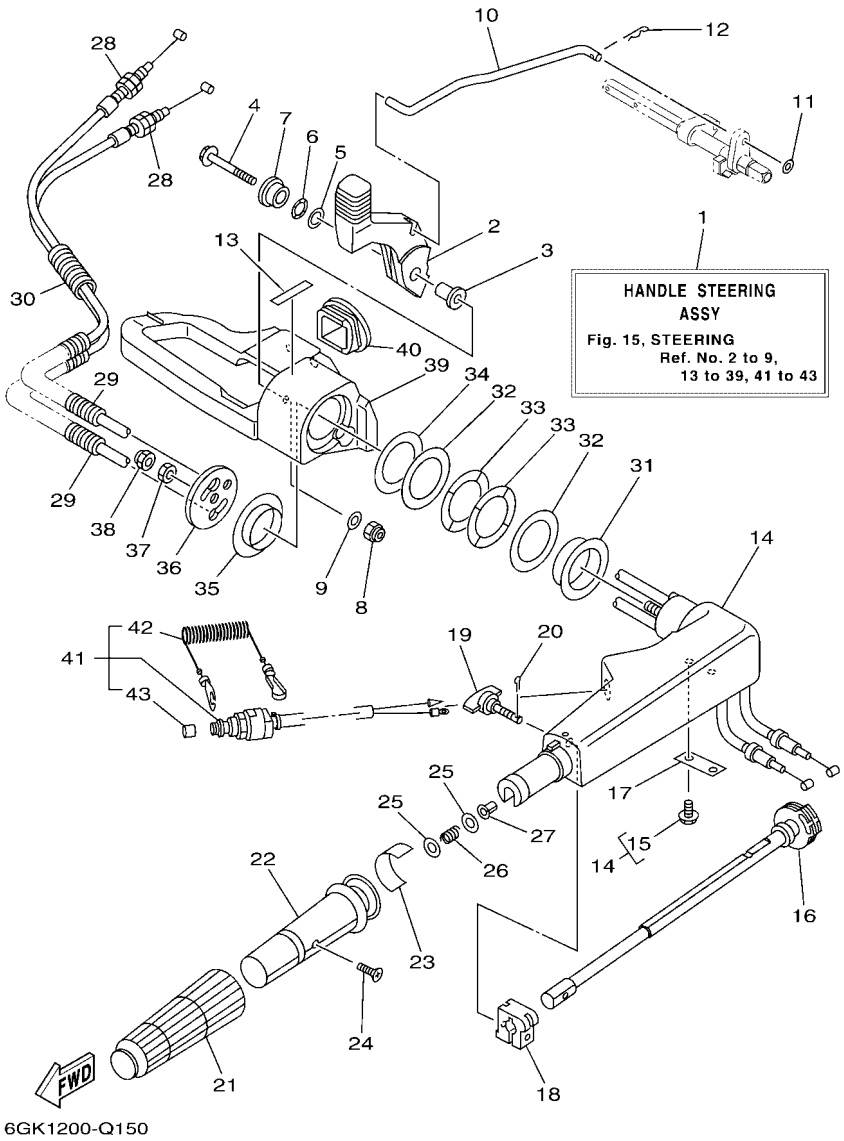

FIG. 15 STEERING — DIRECCION

REF. NO.	PART NO. CODIGO Nº	DESCRIPTION DESCRIPCION	MH	WH	W	WT		REMARKS OBSERVACIONES
1	66T–W0084–04–8D	HANDLE STEERING ASSY CONJUNTO DE MANIJA	1	1				
2	66T–44111–02	HANDLE, GEAR SHIFT MANIJA DE CAMBIO DE MARCHAS	1	1				
3	90387–06M86	COLLAR ESPACIADOR	1	1				
4	97E95–06550	BOLT, HEXAGON W/W DEEP RECESS TORNILLO HEXAGONAL CON RONDONA	1	1				
5	90201–12M07	WASHER, PLATE ARANDELA PLANA	1	1				
6	90206–12052	WASHER, WAVE ARANDELA ONDULADA	1	1				
7	66T–42123–00	BOLT, HANDLE JOINT TORNILLO CONEXION DE LA MANIJ	1	1				
8	95780–06300	NUT, FLANGE TUERCA	1	1				
9	92995–06200	WASHER ARANDELA	1	1				
10	66T–44124–00	LINK, SHIFT ROD ESLABON	1	1				
11	92990–06200	WASHER, PLAIN ARANDELA PLANA	1	1				
12	90468–18008	CLIP PRESILLA	1	1				
13	6X3–44191–00	INDICATOR, SHIFT INDICADOR DE CAMBIOS	1	1				
14	65W–42101–01–8D	HANDLE, STEERING MANIJA DE DIRECCION	1	1				
15	90109–06M86	.BOLT .PERNO	2	2				
16	65W–42138–00	LEVER, THROTTLE PLANCA DE ACELERACION	1	1				
17	65W–42159–00	STAY SOPORTE	1	1				
18	6G1–42126–00	FRICTION, STEERING HANDLE GRIP FRICCION DE MANGO DIRECCION	1	1				
19	65W–42125–00	BOLT, FRICTION ADJUSTING TORNILLO FRICCION ADJUSTA	1	1				
20	91490–20010	PIN. COTTER CHAVETA	1	1				
21	6G1–42177–00	RUBBER, HANDLE HULE DE MANIJA	1	1				
22	664–42119–00	GRIP, STEERING HANDLE MANGO, MANIJA DE DIRRECCION	1	1				
23	6G1–42137–20	INDICATOR, THROTTLE INDICADOR ACELERADOR	1	1				
24	90152–05011	SCREW, COUNTERSUNK TORNILLO EMBUTIDO	1	1				
25	90201–10M02	WASHER, PLATE ARANDELA PLANA	2	2				
26	90501–23215	SPRING, COMPRESSION RESORTE DE COMPRESION	1	1				
27	90386–08032	BUSH BUJE	1	1				

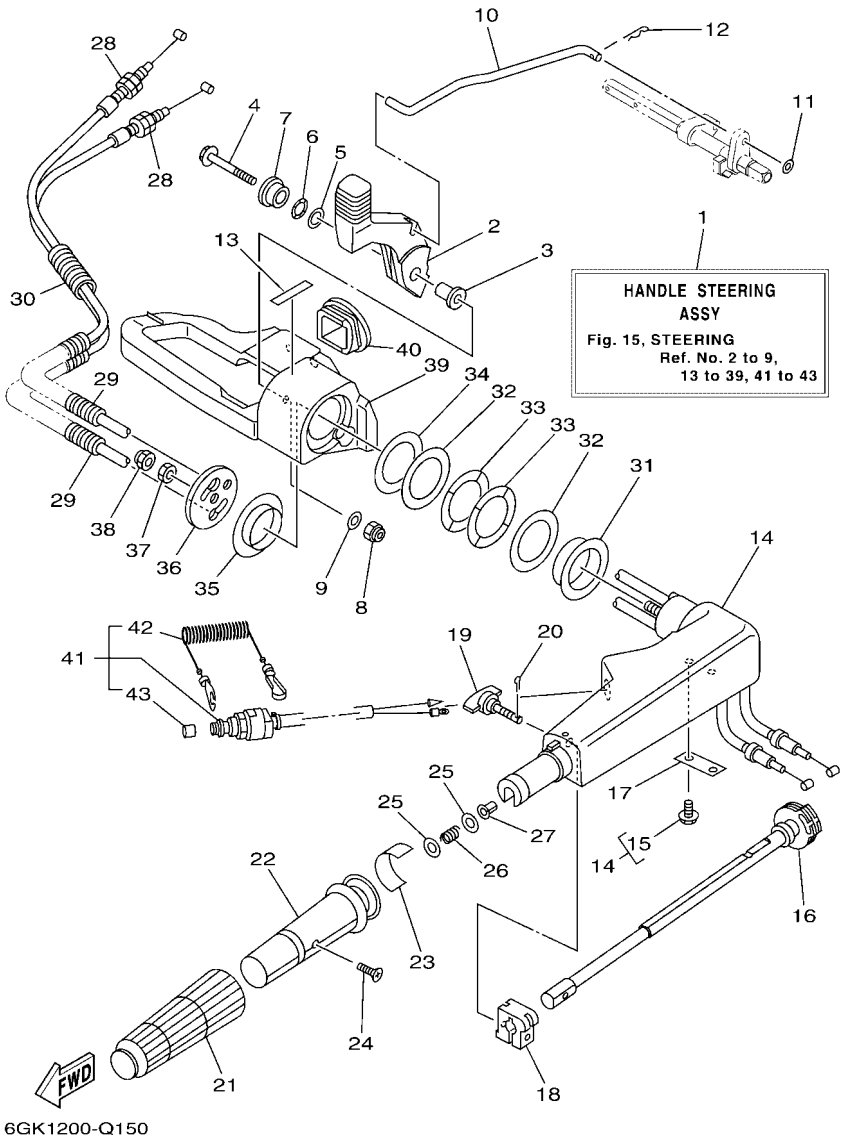

FIG. 15 STEERING — DIRECCION

REF. NO.	PART NO. CODIGO Nº	DESCRIPTION DESCRIPCION	MH	WH	W	WT		REMARKS OBSERVACIONES
28	66T–26301–00	THROTTLE CABLE ASSY CABLE DE ACELERADOR COMPLETO	2	2				
29	90446–10M87	HOSE (L75) TUBO (L75)	2	2				
30	90446–10M86	HOSE (L140) TUBO (L140)	2	2				
31	90386–40MA0	BUSH BUJE	1	1				
32	90201–43M00	WASHER, PLATE ARANDELA PLANA	2	2				
33	90206–43M22	WASHER, WAVE ARANDELA ONDULADA	2	2				
34	90202–43M57	WASHER, PLATE ARANDELA DE PLANA	1	1				
35	90386–40M99	BUSH BUJE	1	1				
36	65W–42131–01	COVER, HANDLE STEERING CUBIERTA MANIJA DIRRECCION	1	1				
37	95380–10700	NUT TUERCA	1	1				
38	95780–10300	NUT, FLANGE TUERCA	1	1				
39	65W–42121–01–8D	BRACKET SOPORTE	1	1				
40	66T–41273–00	GROMMET TAPON PROTECTOR	1	1				
41	66T–82575–01	ENGINE STOP SWITCH ASSY INTERRUPTOR DE PARADA COMPL	1	1				
42	682–82556–00	.LANYARD, STOP SWITCH .CORDON DE INTERRUPTOR PARADA	1	1				
43	689–8257Y–00	.CAP .TAPA	1	1				

FIG. 16 STEERING FRICTION — FRICCION DE DIRECCION

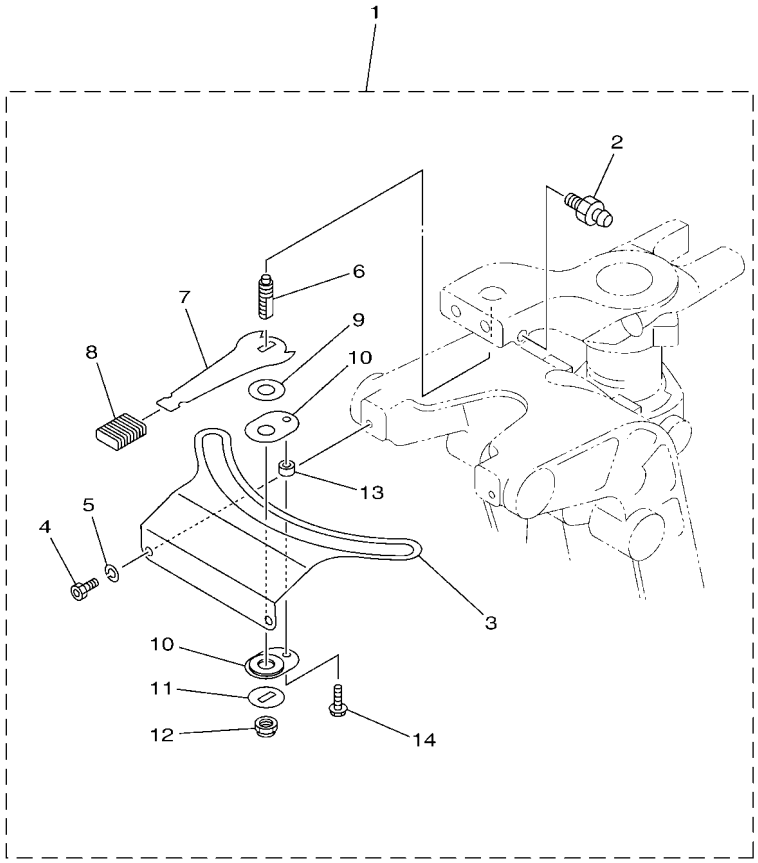

65W1010-2181

REF. NO.	PART NO. CODIGO Nº	DESCRIPTION DESCRIPCION	MH	WH	W	WT		REMARKS OBSERVACIONES
1	65W–42508–00	STEERING FRICTION ASSY DIRECCION FRICCION COMP.	1					
2	93700–06M03	.NIPPLE, GREASE .BOQUILLA DE ENGRASAR	1					
3	65W–42527–00	.PLATE, FRICTION .PLACA DE FRICCION	1					
4	90109–06M88	.BOLT .PERNO	2					
5	92990–06100	.WASHER, SPRING .ARANDELA PLANA	2					
6	65W–42562–00	.SHAFT, STEERING LOCK .EJE,CERRADURA DE DIRECCION	1					
7	65W–42561–00	.KNOB, STEERING LOCK .PERILLA	1					
8	689–43633–00	.COVER, TILT LEVER .CUBIERTA PALANCA DE INCLINACI	1					
9	90202–10M56	.WASHER, PLATE .ARANDELA DE PLANA	1					
10	65W–42528–00	.PLATE, FRICTION .PIEZA DE FRICCION	2					
11	90209–10M26	.WASHER .ARANDELA DE SEPARACION	1					
12	90185–10M14	.NUT, SELF-LOCKING .TUERCA AUTOBLOCANTE	1					
13	90387–05054	.COLLAR .ESPACIADOR	1					
14	90109–05M89	.BOLT .PERNO	1					

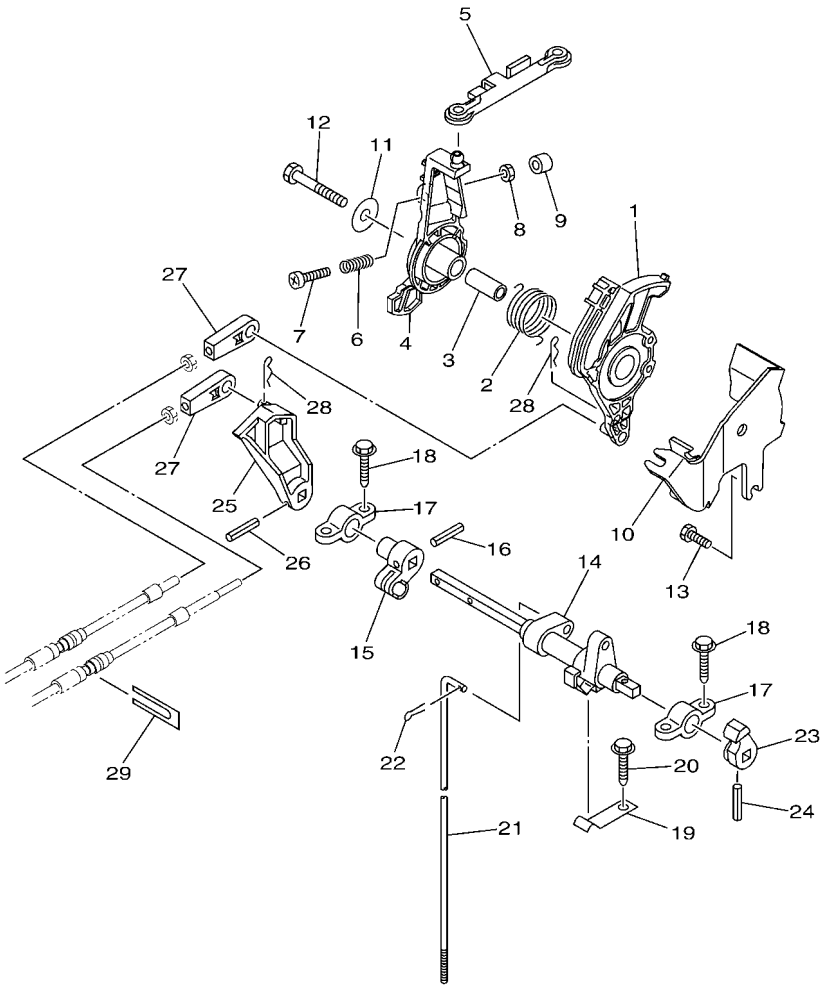

6GK3200-R170

FIG. 17 CONTROL

CONTROL

REF. NO.	PART NO. CODIGO Nº	DESCRIPTION DESCRIPCION	MH	WH	W	WT		REMARKS OBSERVACIONES
1	66T–41638–10	PULLEY POLEA	1	1	1	1		
2	66T–42167–00	SPRING 1 RESORTE 1	1	1	1	1		
3	90387–08M16	COLLAR ESPACIADOR	1	1	1	1		
4	66T–41631–12	LEVER, MAGNETO CONTROL PALANCA DE CONTROL DE MAGNETO	1	1	1	1		
5	66T–41237–00	JOINT, LINK CONECTOR	1	1	1	1		
6	90501–10M84	SPRING, COMPRESSION RESORTE DE COMPRESION	1	1	1	1		
7	97880–06035	SCREW, PAN HEAD TORNILLO DE CABEZA CON PLANA	1	1	1	1		
8	95380–06700	NUT TUERCA	1	1	1	1		
9	688–44194–00	CAP TAPA	1	1	1	1		
10	66T–14497–10	STAY, THROTTLE WIRE SOPORTE VALVULA DE OBTURACION	1	1	1	1		
11	90201–08M54	WASHER, PLATE ARANDELA PLANA	1	1	1	1		
12	97D95–08045	BOLT, HEXAGON DEEP RECESS TORNILLO HEXAGONAL	1	1	1	1		
13	97D95–06014	BOLT, HEXAGON DEEP RECESS TORNILLO HEXAGONAL	1	1	1	1		
14	66T–44121–01	LEVER, SHIFT ROD PALANCA VARILLA CAMBIOS	1	1	1	1		
15	66M–44122–00	BUSHING, SHIFT ROD LEVER BUJE PALANCA VARILLA DE CAMBIO	1	1	1	1		
16	90254–03M05	PIN, SPRING PASADOR DE TIPO A RESORTE	1	1	1	1		
17	6F5–41662–00	BRACKET 2 SOPORTE 2	2	2	2	2		
18	90109–06M81	BOLT PERNO	4	4	4	4		
19	682–44116–01	SPRING RESORTE	1	1	1	1		
20	90109–06M80	BOLT PERNO	1	1	1	1		
21	66T–44143–00	ROD, SHIFT 1 VARILLA DE CAMBIO 1	1		1			S(16.7") S(16.7")
	66T–44143–10	ROD, SHIFT 1 VARILLA DE CAMBIO 1	1	1	1	1		L(21.7"),X(25.6") L(21.7"),X(25.6")
22	91490–16012	PIN. COTTER CHAVETA	1	1	1	1		
23	65W–44173–01	LEVER, SHIFT CONTROL PALANCA CONTROL CAMBIOS		1				
24	90254–03M05	PIN, SPRING PASADOR DE TIPO A RESORTE		1				
25	66T–44125–01	LEVER, SHIFT ROD PALANCA VARILLA CAMBIOS	1	1	1	1		
26	90254–03M05	PIN, SPRING PASADOR DE TIPO A RESORTE	1	1	1	1		

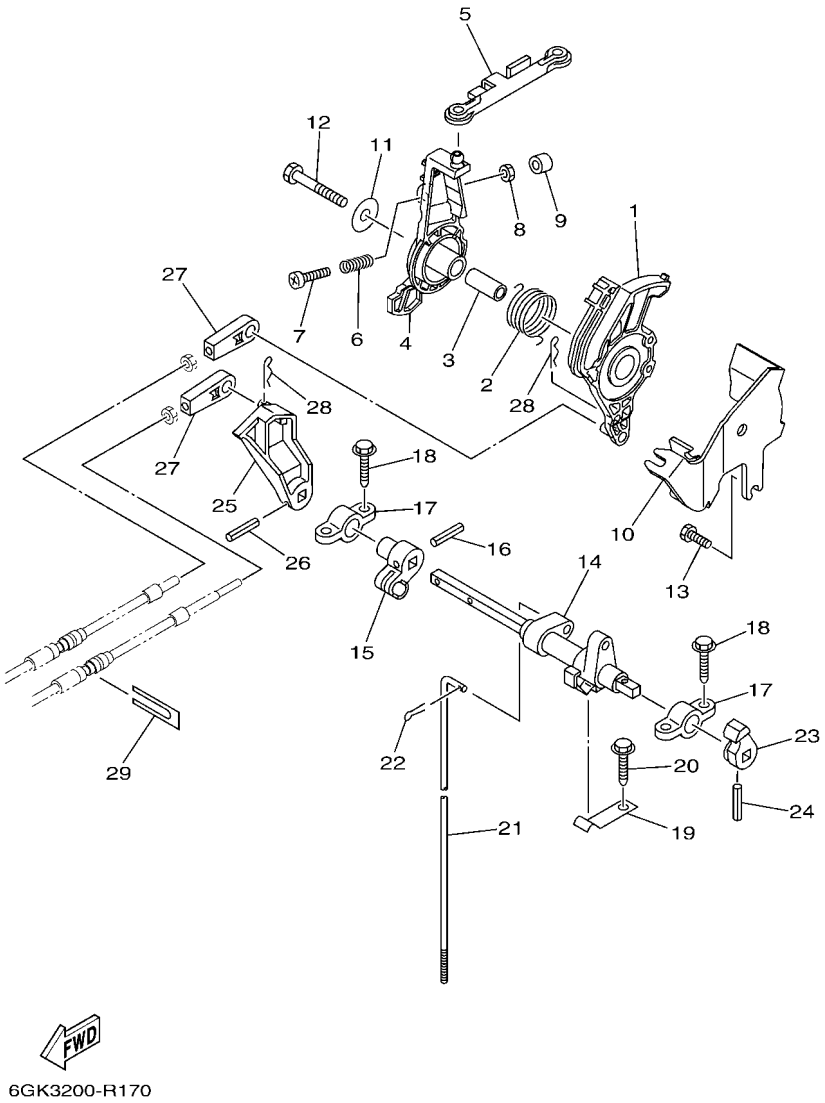

FIG. 17 CONTROL

CONTROL

REF. NO.	PART NO. CODIGO Nº	DESCRIPTION DESCRIPCION	MH	WH	W	WT		REMARKS OBSERVACIONES
27	6FM–48344–00	CABLE END, REMOTE CONTROL BASE CONTROL			2	2		
28	90468–18008	CLIP PRESILLA			2	2		
29	6H3–48538–00	CLAMP, CABLE 1 GRAMPA DE CABLE			1	1		

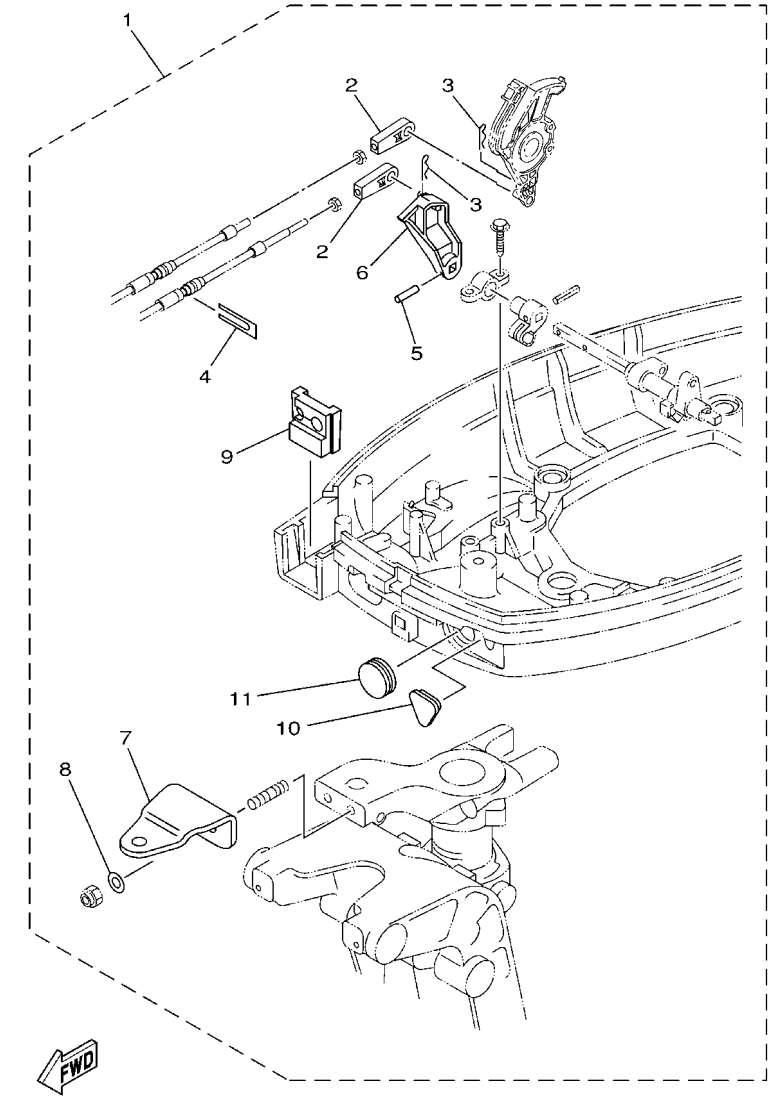

6GB5280-R160

FIG. 18 REMO CON ATTACHMENT — CONJUNTO ADITAMENTO

REF. NO.	PART NO. CODIGO Nº	DESCRIPTION DESCRIPCION	MH	WH	W	WT		REMARKS OBSERVACIONES
1	66T–48501–01	REMOTE CONT. ATTACHMENT ASSY. CONJUNTO ADITAMENTO	1	1				AP AP
2	6FM–48344–00	.CABLE END, REMOTE CONTROL .BASE CONTROL	2	2				
3	90468–18008	.CLIP .PRESILLA	2	2				
4	6H3–48538–00	.CLAMP, CABLE 1 .GRAMPA DE CABLE	1	1				
5	90254–03M05	.PIN, SPRING .PASADOR DE TIPO A RESORTE	1	1				
6	66T–44125–01	.LEVER, SHIFT ROD .PALANCA VARILLA CAMBIOS	1	1				
7	65W–48511–01	.HOOK, STEERING .GANCHO DIRECCION	1	1				
8	90201–10120	.WASHER, PLATE .ARANDELA PLANA	2	2				
9	66T–42725–30	.GROMMET .TAPON	1	1				
10	65W–26326–10	.GROMMET .TAPON PROTECTOR	1	1				
11	65W–42726–10	.GROMMET .TAPON	1	1				

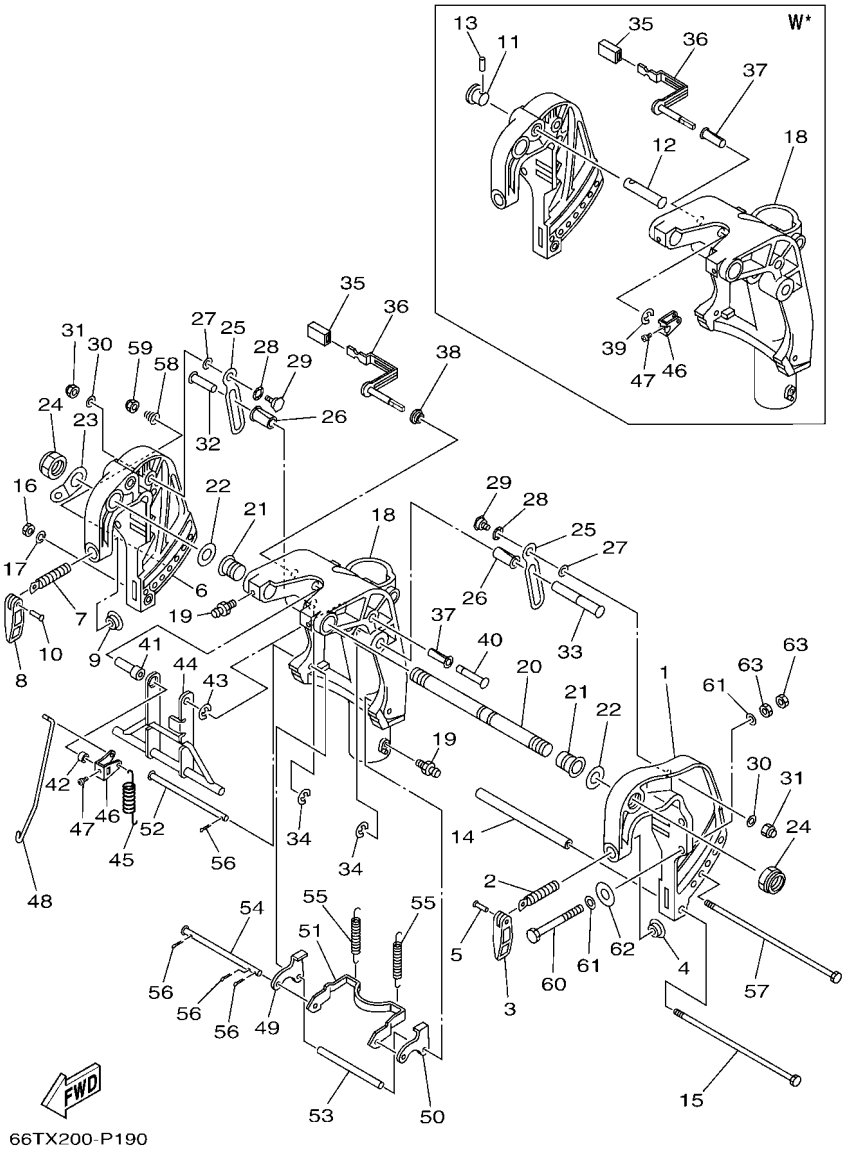

D*:FOR SHALLOW WATER DRIVE
D*:PARA NAVEGACION EN AGUAS POCO PROFUNDAS
W*:WITHOUT SHALLOW WATER DRIVE
W*:SIN NAVEGACION EN AGUAS POCO PROFUNDAS

FIG. 19 BRACKET 1 — SOPORTE 1

REF. NO.	PART NO. CODIGO Nº	DESCRIPTION DESCRIPCION	MH	WH	W	WT		REMARKS OBSERVACIONES
1	66T–43111–01–8D	BRACKET, CLAMP 1 SOPORTE DE LA ABRAZADERA 1	1	1	1			
2	90149–14M12	SCREW TORNILLO DE REGLAJE	1	1	1			
3	663–43118–01–8D	HANDLE, TRANSOM CLAMP MANIJA DE LA ABRAZADERA DEL ES	1	1	1			
4	648–43114–01	PAD, TRANSOM CLAMP ARANDELA DE ABRAZADERA	1	1	1			
5	90243–04007	PIN PASADOR	1	1	1			
6	66T–43112–01–8D	BRACKET, CLAMP 2 SOPORTE DE LA ABRAZADERA 2	1	1	1			
7	90149–14M12	SCREW TORNILLO DE REGLAJE	1	1	1			
8	663–43118–01–8D	HANDLE, TRANSOM CLAMP MANIJA DE LA ABRAZADERA DEL ES	1	1	1			
9	648–43114–01	PAD, TRANSOM CLAMP ARANDELA DE ABRAZADERA	1	1	1			
10	90243–04007	PIN PASADOR	1	1	1			
11	65W–43192–00	KNOB, STOPPER PERILLA DE TOPE	1	1	1			W* W*
12	65W–43191–00	SHAFT, STOPPER EJE DE TOPE	1	1	1			W* W*
13	91690–30018	PIN, SPRING PASADOR DE RESORTE	1	1	1			W* W*
14	90387–10108	COLLAR ESPACIADOR	1	1	1			
15	90101–08M76	BOLT TORNILLO	1	1	1			
16	95380–08600	NUT TUERCA	1	1	1			
17	92990–08100	WASHER, SPRING ARANDELA PLANA	1	1	1			
18	65W–43311–01–8D	BRACKET, SWIVEL 1 SOPORTE GIRATORIO 1	1		1			S(16.7") S(16.7")
	65W–43311–11–8D	BRACKET, SWIVEL 1 SOPORTE GIRATORIO 1	1	1	1			L(21.7"),X(25.6") L(21.7"),X(25.6")
19	93700–06M03	NIPPLE, GREASE BOQUILLA DE ENGRASAR	1					WITH STEERING FRICTION WITH STEERING FRICTION
	93700–06M03	NIPPLE, GREASE BOQUILLA DE ENGRASAR	3	3	3			
20	63D–43131–01	BOLT, CLAMP BRACKET TORNILLO DE ABRAZADERA DEL SOP	1	1	1			
21	90386–22M15	BUSH BUJE	2	2	2			
22	90201–22M03	WASHER, PLATE ARANDELA PLANA	2	2	2			
23	6J8–43113–01	PLATE, CLAMP BRACKET PLACA ABRAZADERA SOPORTE	1	1	1			
24	90185–22043	NUT, SELF-LOCKING TUERCA AUTOBLOCANTE	2	2	2			
25	66T–43627–00	STOPPER RETEN	2	2	2			

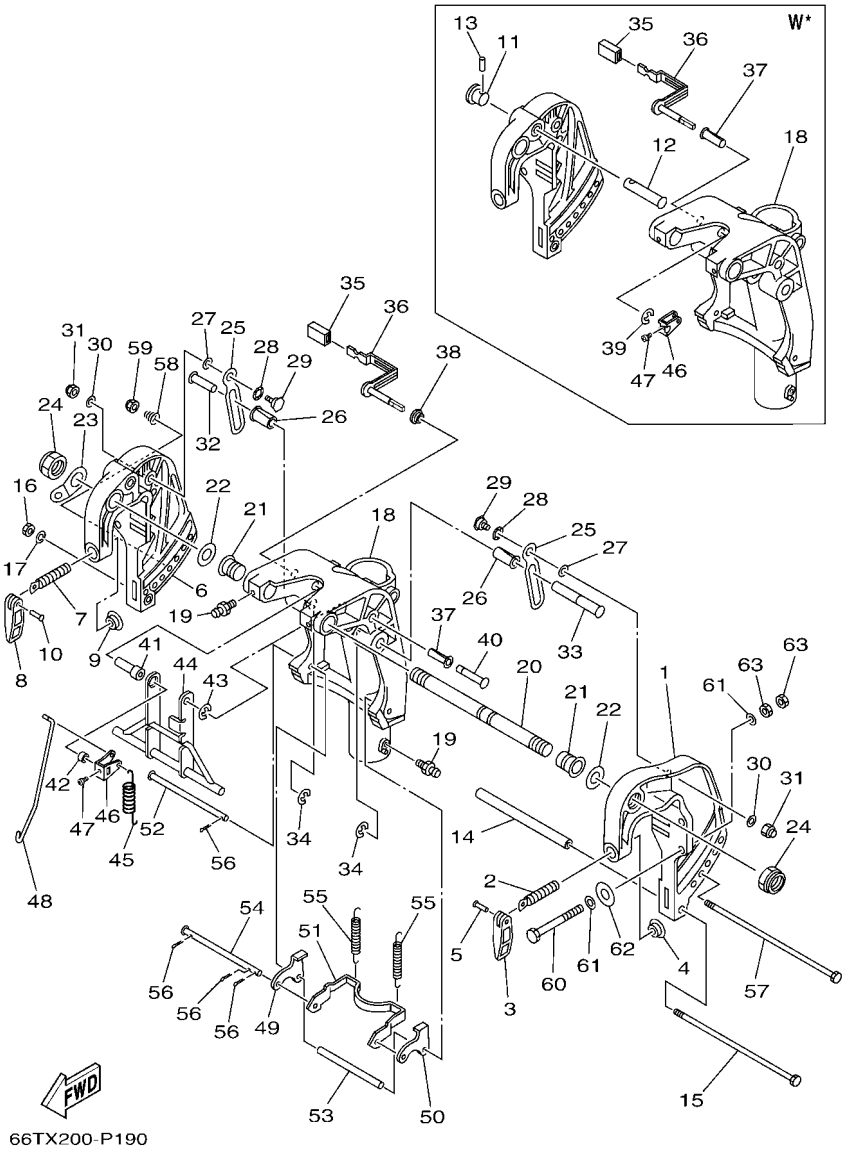

D*:FOR SHALLOW WATER DRIVE
D*:PARA NAVEGACION EN AGUAS POCO PROFUNDAS
W*:WITHOUT SHALLOW WATER DRIVE
W*:SIN NAVEGACION EN AGUAS POCO PROFUNDAS

FIG. 19 BRACKET 1 — SOPORTE 1

REF. NO.	PART NO. CODIGO Nº	DESCRIPTION DESCRIPCION	MH	WH	W	WT		REMARKS OBSERVACIONES
26	90386–12M98	BUSH BUJE	2	2	2			
27	90202–12031	WASHER, PLATE ARANDELA DE PLANA	2	2	2			
28	90206–12M00	WASHER, WAVE ARANDELA ONDULADA	2	2	2			
29	90109–08M90	BOLT PERNO	2	2	2			
30	90201–08M07	WASHER, PLATE ARANDELA PLANA	2	2	2			
31	90185–08057	NUT, SELF-LOCKING TUERCA AUTOBLOCANTE	2	2	2			
32	90249–12M34	PIN PASADOR	1	1	1			D* D*
	90249–12M34	PIN PASADOR	2	2	2			W* W*
33	90249–12M34	PIN PASADOR	1	1	1			D* D*
34	99080–10600	CIRCLIP PRESILLA REDONDA	2	2	2			
35	682–43318–01	COVER CUBIERTA	1	1	1			
36	65W–43630–11	TILT LEVER ASSY PLANCA DE INCLINACION COMPL	1	1	1			D* D*
	65W–43630–02	TILT LEVER ASSY PLANCA DE INCLINACION COMPL	1	1	1			W* W*
37	90386–10M99	BUSH BUJE	1	1	1			
38	90386–07MA2	BUSH BUJE	1	1	1			D* D*
39	99080–08600	CIRCLIP PRESILLA REDONDA	1	1	1			W* W*
40	90249–10M31	PIN PASADOR	1	1	1			D* D*
41	90387–07049	COLLAR ESPACIADOR	1	1	1			D* D*
42	90387–07048	COLLAR ESPACIADOR	1	1	1			D* D*
43	99080–08600	CIRCLIP PRESILLA REDONDA	1	1	1			D* D*
44	66T–43350–11	RECEIVER ASSY RECIBIDOR COMPL	1	1	1			D* D*
45	90506–20M37	SPRING, TENSION RESORTE DE TENSION	1	1	1			D* D*
46	66T–43631–11	LEVER, TILT PALANCA DE INCLINACION	1	1	1			D* D*
	66T–43631–01	LEVER, TILT PALANCA DE INCLINACION	1	1	1			W* W*
47	90157–05014	SCREW, PAN HEAD TORNILLO CABEZA CONICA PLANA	1	1	1			
48	65W–43616–00	ROD, TILT LOCK VARILLA SEGURO DE INCLINACION	1	1	1			
49	65W–43614–01	PLATE, TILT LOCK PLACA DE SEGURO DE INCLINACION	1	1	1			

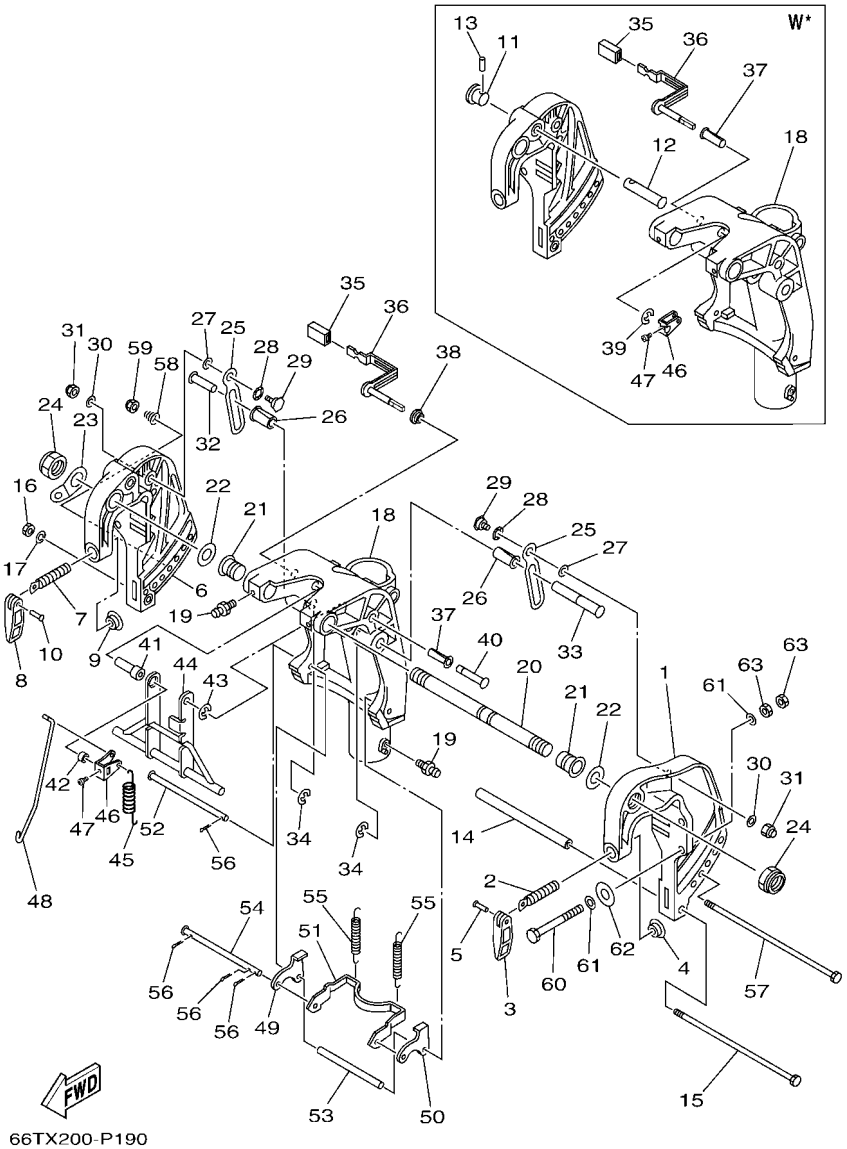

D*:FOR SHALLOW WATER DRIVE
D*:PARA NAVEGACION EN AGUAS POCO PROFUNDAS
W*:WITHOUT SHALLOW WATER DRIVE
W*:SIN NAVEGACION EN AGUAS POCO PROFUNDAS

FIG. 19 BRACKET 1 — SOPORTE 1

REF. NO.	PART NO. CODIGO Nº	DESCRIPTION DESCRIPCION	MH	WH	W	WT		REMARKS OBSERVACIONES
50	65W–43615–01	PLATE, TILT LOCK PLACA DE SEGURO DE INCLINACION	1	1	1			
51	65W–43613–00	ARM, TILT LOCK BRAZO DE SEGURO DE INCLINACION	1	1	1			
52	90249–07M32	PIN PASADOR	1	1	1			
53	90387–07M29	COLLAR ESPACIADOR	1	1	1			
54	90249–07M33	PIN PASADOR	1	1	1			
55	90506–30M00	SPRING, TENSION RESORTE DE TENSION	2	2	2			
56	91490–20012	PIN. COTTER CHAVETA	4	4	4			
57	90101–08M28	BOLT TORNILLO	1	1	1			
58	90502–10M06	SPRING, CONICAL RESORTE CONICO	1	1	1			
59	90185–08057	NUT, SELF-LOCKING TUERCA AUTOBLOCANTE	1	1	1			
60	90101–10047	BOLT TORNILLO	4	4	4			
61	92995–10600	WASHER ARANDELA	8	8	8			
62	90201–12426	WASHER, PLATE ARANDELA PLANA	4	4	4			
63	95380–10600	NUT TUERCA	8	8	8			

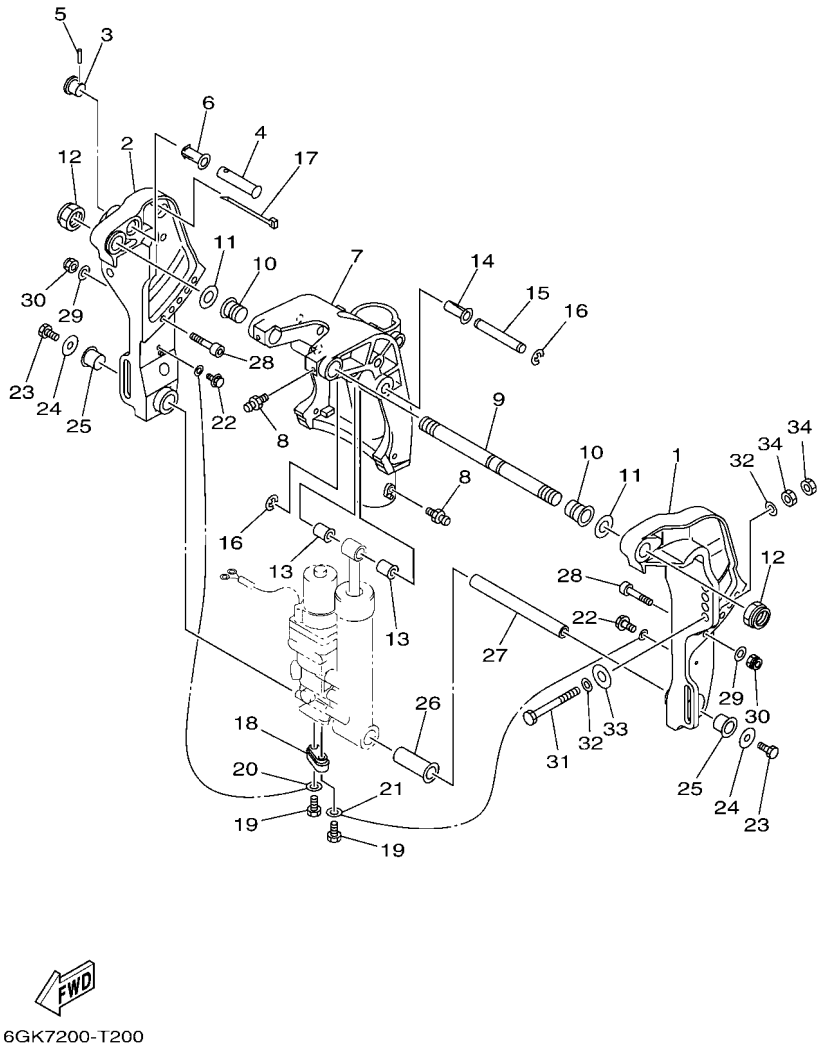

FIG. 20 BRACKET 2 — SOPORTE 2

REF. NO.	PART NO. CODIGO Nº	DESCRIPTION DESCRIPCION	MH	WH	W	WT		REMARKS OBSERVACIONES
1	65W–43111–10–8D	BRACKET, CLAMP 1 SOPORTE DE LA ABRAZADERA 1				1		
2	65W–43112–10–8D	BRACKET, CLAMP 2 SOPORTE DE LA ABRAZADERA 2				1		
3	65W–43192–00	KNOB, STOPPER PERILLA DE TOPE				1		
4	65W–43191–00	SHAFT, STOPPER EJE DE TOPE				1		
5	91690–30018	PIN, SPRING PASADOR DE RESORTE				1		
6	90386–14MA1	BUSH BUJE				1		
7	65W–43311–11–8D	BRACKET, SWIVEL 1 SOPORTE GIRATORIO 1				1		L(21.7") L(21.7")
8	93700–06M03	NIPPLE, GREASE BOQUILLA DE ENGRASAR				3		
9	63D–43131–01	BOLT, CLAMP BRACKET TORNILLO DE ABRAZADERA DEL SOP				1		
10	90386–22M15	BUSH BUJE				2		
11	90201–22M03	WASHER, PLATE ARANDELA PLANA				2		
12	90185–22043	NUT, SELF-LOCKING TUERCA AUTOBLOCANTE				2		
13	90381–12M11	BUSH, SOLID BUJE SOLIDO				2		
14	90386–12M98	BUSH BUJE				1		
15	90249–12M38	PIN PASADOR				1		
16	99080–10600	CIRCLIP PRESILLA REDONDA				2		
17	90465–13M11	CLAMP BRIDA				2		
18	65W–45251–00	ANODE CATODE				1		
19	90101–06020	BOLT TORNILLO				2		
20	6H1–82148–00	WIRE, LEAD 4 CABLE CONDUCTOR 4				1		
21	6U0–82127–00	WIRE, LEAD 2 CABLE CONDUCTOR 2				1		
22	97E95–06514	BOLT, HEXAGON W/W DEEP RECESS TORNILLO HEXAGONAL CON RONDONA				2		
23	97080–08016	BOLT PERNO				2		
24	90201–08M00	WASHER, PLATE ARANDELA PLANA				2		
25	90386–18M44	BUSH BUJE				2		
26	90386–18MA0	BUSH BUJE				1		
27	90249–18M35	PIN PASADOR				1		

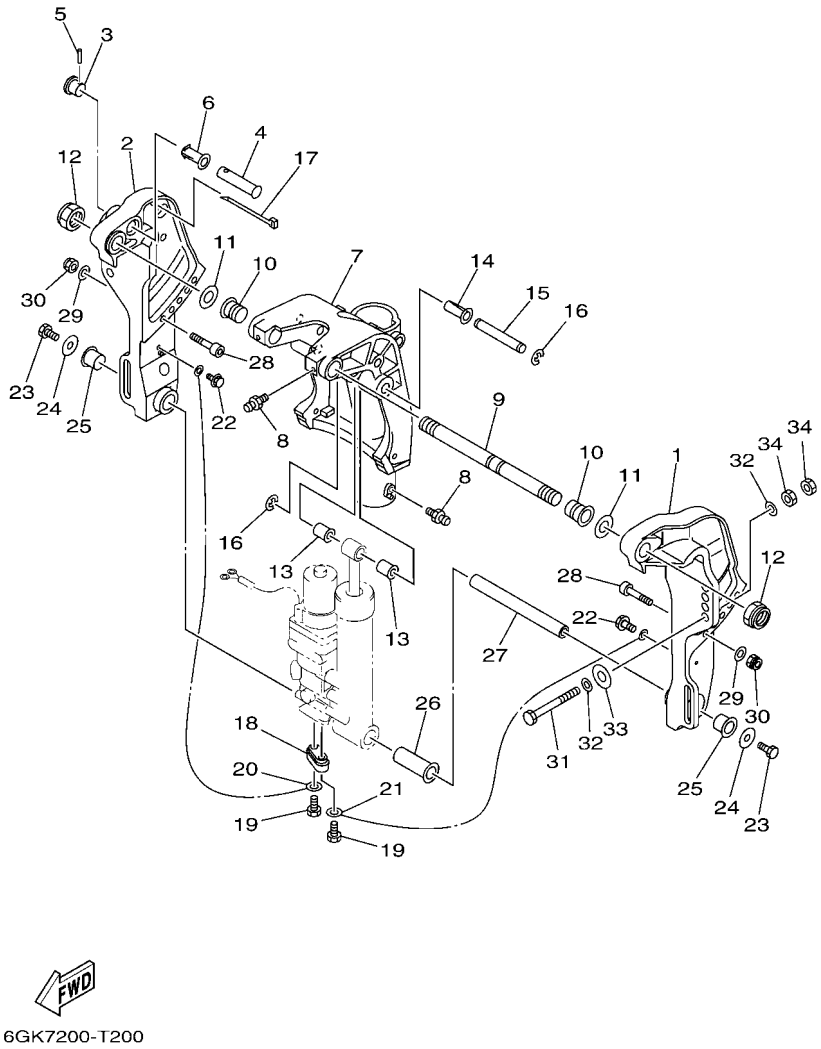

FIG. 20 BRACKET 2 — SOPORTE 2

REF. NO.	PART NO. CODIGO Nº	DESCRIPTION DESCRIPCION	MH	WH	W	WT		REMARKS OBSERVACIONES
28	90110–10M02	BOLT, HEXAGON SOCKET HEAD TORNILLO ALLEN				2		
29	92995–10600	WASHER ARANDELA				2		
30	90185–10M13	NUT, SELF-LOCKING TUERCA AUTOBLOCANTE				2		
31	90101–12063	BOLT (L:105MM) TORNILLO (L:105MM)				4		
32	90201–12062	WASHER, PLATE ARANDELA PLANA				8		
33	90201–12426	WASHER, PLATE ARANDELA PLANA				4		
34	95380–12600	NUT TUERCA				8		

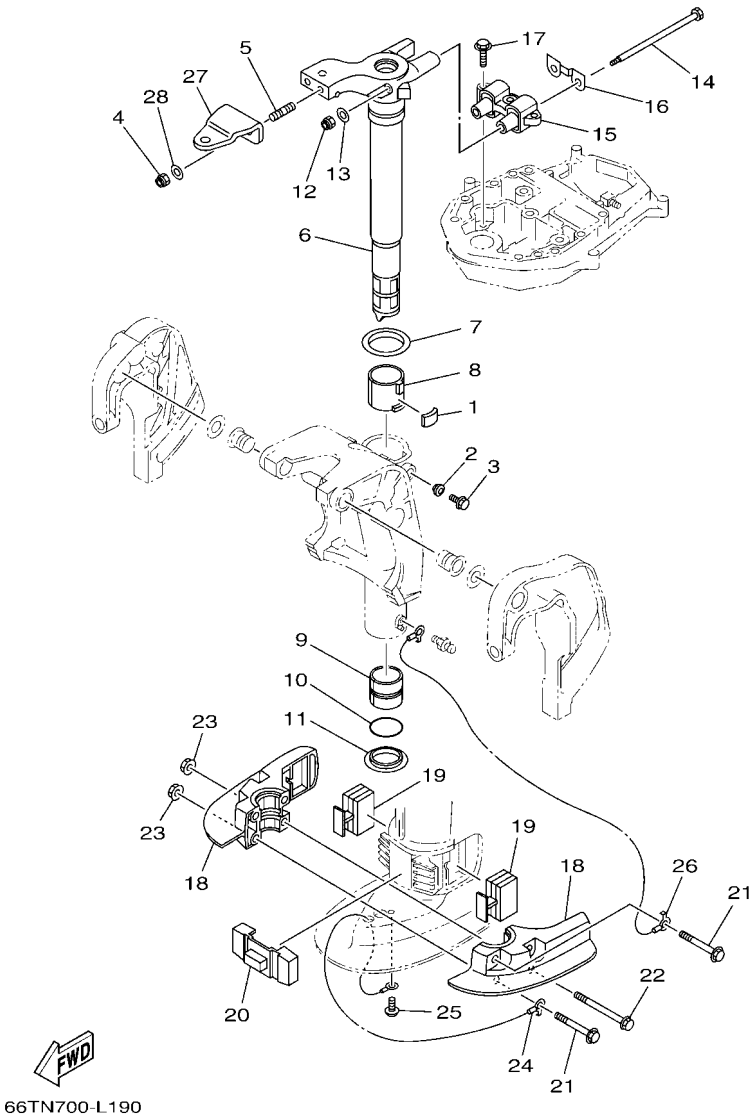

FIG. 21 BRACKET 3 — SOPORTE 3

REF. NO.	PART NO. CODIGO Nº	DESCRIPTION DESCRIPCION	MH	WH	W	WT		REMARKS OBSERVACIONES
1	648–42528–00	PLATE, FRICTION PIEZA DE FRICCION	1	1	1	1		
2	65W–43373–00	SEAL, DAMPER SELLO DE GOMA	1	1	1	1		
3	90105–08M76	BOLT, FLANGE TORNILLO	1	1	1	1		
4	90185–10027	NUT, SELF-LOCKING TUERCA AUTOBLOCANTE	2	2	2	2		
5	90116–10063	BOLT, STUD ESPARRAGO	2	2	2	2		
6	65W–42511–01–8D	BRACKET, STEERING SOPORTE DE DIRECCION	1		1			S(16.7") S(16.7")
	65W–42511–11–8D	BRACKET, STEERING SOPORTE DE DIRECCION	1	1	1	1		L(21.7"),X(25.6") L(21.7"),X(25.6")
7	90209–52M00	WASHER ARANDELA DE SEPARACION	1	1	1	1		
8	90386–52M02	BUSH BUJE	1	1	1	1		
9	90386–44M03	BUSH BUJE	1	1	1	1		
10	93210–43MJ0	O-RING ANILLO O	1	1	1	1		
11	90386–44M99	BUSH BUJE	1	1	1	1		
12	90185–08018	NUT, SELF-LOCKING TUERCA AUTOBLOCANTE	2	2	2	2		
13	92995–08200	WASHER ARANDELA	2	2	2	2		
14	90101–08M86	BOLT TORNILLO	2	2	2	2		
15	66T–44514–00	MOUNT DAMPER, UPPER SIDE AMORTIGUADOR LADO SUPERIOR	1	1	1	1		S(16.7"),L(21.7") S(16.7"),L(21.7")
	66T–44514–30	MOUNT DAMPER, UPPER SIDE AMORTIGUADOR LADO SUPERIOR	1					X(25.6") X(25.6")
16	66T–44526–00	PLATE PLACA 1	1	1	1	1		S(16.7"),L(21.7") S(16.7"),L(21.7")
	66T–44526–30	PLATE PLACA 1	1					X(25.6") X(25.6")
17	97E75–08530	BOLT, HEXAGON W/W DEEP RECESS TORNILLO HEXAGONAL CON RONDONA	3	3	3	3		
18	65W–44551–00–8D	HOUSING, LOWER MOUNT RUBBER 1 CAJA AMORTIGUADOR INFERIOR HU	2	2	2	2		
19	65W–44555–10	MOUNT DAMPER, LOWER SIDE AMORTIGUADOR DE HULE LADO INFE	2	2	2	2		
20	66T–44575–00	DAMPER, LOWER MOUNT RUBBER AMORTIGUADOR INFERIOR	1	1	1	1		
21	97E75–10570	BOLT, HEXAGON W/W DEEP RECESS TORNILLO HEXAGONAL CON RONDONA	2	2	2	2		
22	90119–10073	BOLT, WITH WASHER TORNILLO CON ARANDELA	2	2	2	2		
23	90179–10M33	NUT TUERCA	4	4	4	4		
24	66T–82127–10	WIRE, LEAD 2 CABLE CONDUCTOR 2	1	1	1	1		

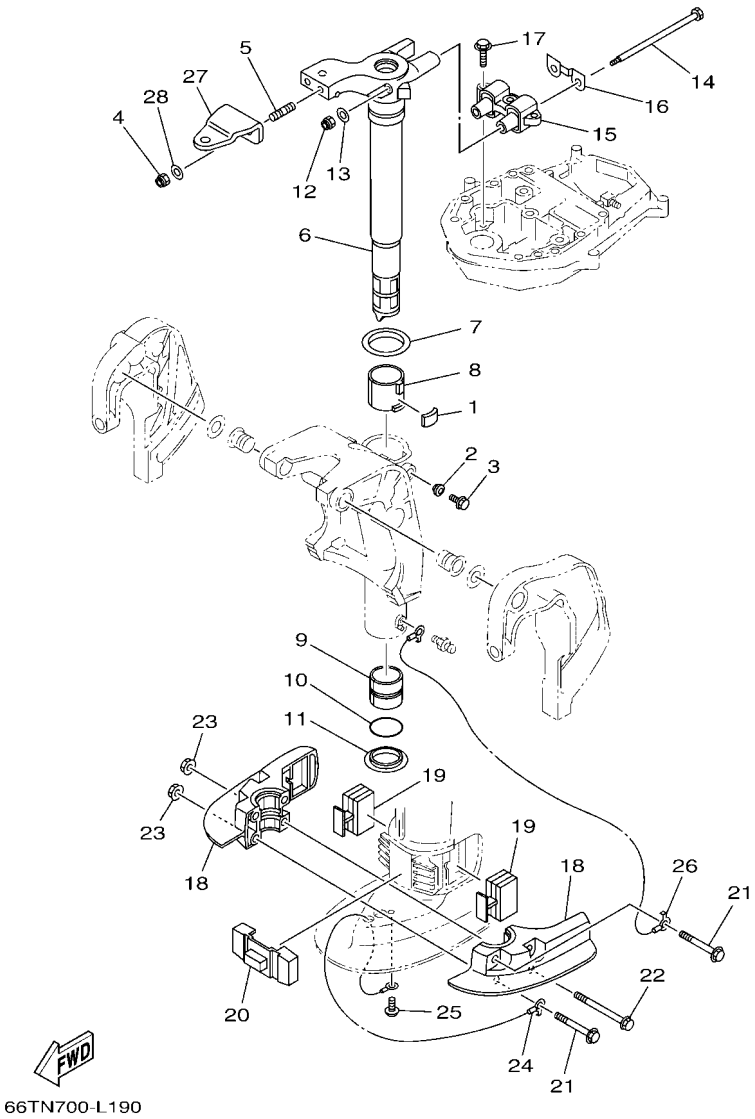

FIG. 21 BRACKET 3 — SOPORTE 3

REF. NO.	PART NO. CODIGO Nº	DESCRIPTION DESCRIPCION	MH	WH	W	WT		REMARKS OBSERVACIONES
25	97885–06008	SCREW, PAN HEAD TORNILLO A MUESCA	1	1	1	1		
26	66T–82127–00	WIRE, LEAD 2 CABLE CONDUCTOR 2	1	1	1	1		L(21.7"),X(25.6") L(21.7"),X(25.6")
27	65W–48511–01	HOOK, STEERING GANCHO DIRECCION			1	1		
28	90201–10049	WASHER, PLATE ARANDELA PLANA			2	2		

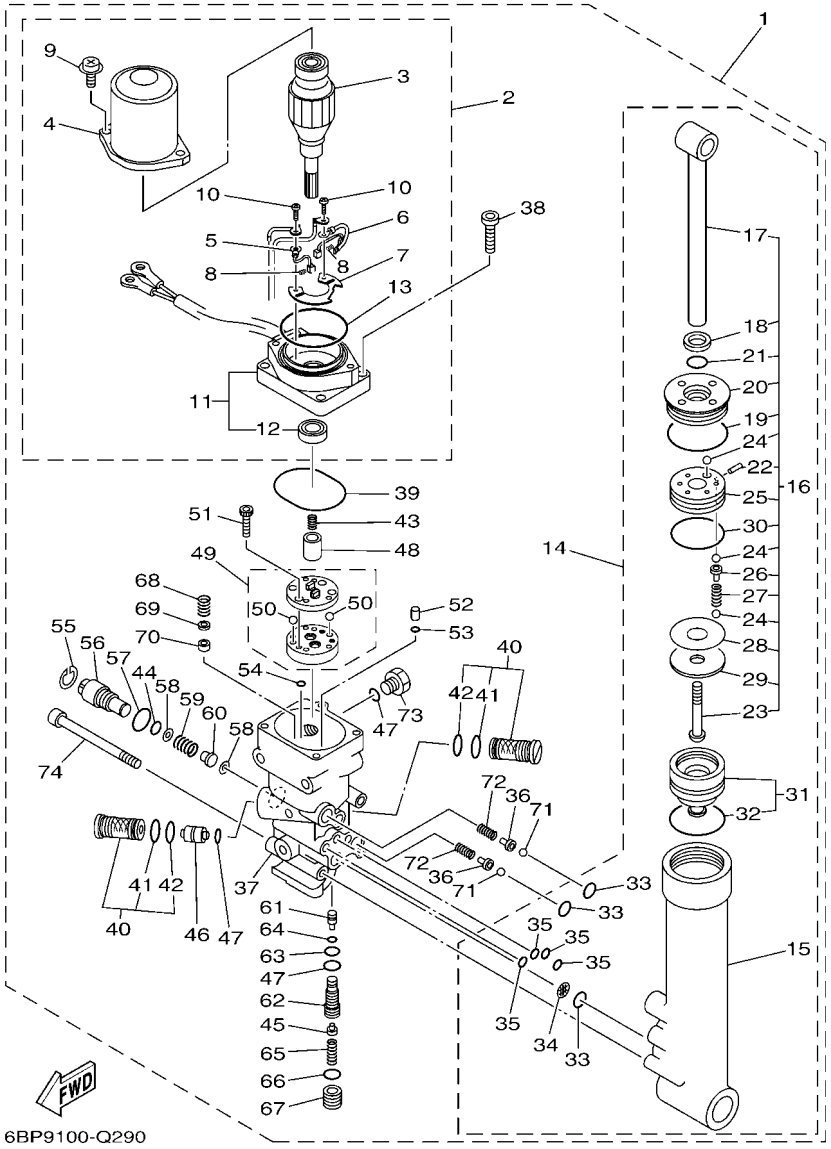

FIG. 22 POWER TRIM & TILT ASSY — COMPONER Y PODER VARILLA

REF. NO.	PART NO. CODIGO Nº	DESCRIPTION DESCRIPCION	MH	WH	W	WT		REMARKS OBSERVACIONES
1	65W–43800–23–8D	POWER TRIM & TILT ASSY ELEVADOR HIDRAULICO COMPL.				1		
2	65W–43880–21	.MOTOR ASSY .MOTOR COMPL.				1		
3	67C–43805–11	..ARMATURE ASSY ..INDUCIDO COMPL.				1		
4	67C–43804–10	..STATOR ASSY ..ESTATOR COMPL				1		
5	67C–43892–10	..BRUSH 2 ..ESCOBILLA 2				1		
6	67C–82181–10	..CIRCUIT BREAKER COMP. ..RUPTOR DE CIRCUITO COMPL				1		
7	67C–4380F–10	..PLATE, BRUSH HOLDER ..PLACA				1		
8	67C–4386K–10	..SPRING, BRUSH ..RESORTE, ESCOBILLA				2		
9	67C–43879–10	..SCREW, WITH WASHER ..TORNILLO CON RONDANA				2		
10	97602–04316	..SCREW, PAN HEAD WITH WASHER ..TORNILLO CON RONDONA				2		
11	65W–43881–22	..FRAME, END ..CUADRO EXTERMO				1		
12	67C–43882–10	...OIL SEAL ...SELLO ACEITE				1		
13	67C–43862–10	..O-RING ..ANILLO EN O 2				1		
14	65W–43840–01	.POWER TILT ASSY .CONJUNTO COMPONER				1		
15	65W–4380K–00	..CYLINDER, TILT SUB ASSY ..CILINDRO, INCLINACION				1		
16	65W–43810–01	..TILT PISTON SUB ASSY ..ELEVADOR SUB-PISTON COMPL.				1		
17	65W–43801–01	...ROD ...VALILLA COMPL INCLINACION				1		
18	65W–43812–00	...SEAL, DUST ...SELLO DE POLVO				1		
19	65W–43865–00	...O-RING ...ANILLO EN O 5				1		
20	65W–43811–01	...SCREW, CYLINDER END ...TORNILLO CILINDRO EXTREMO				1		
21	67C–43867–00	...O-RING ...ANILLO EN O 7				1		
22	91609–16012	...PIN, SPRING ...PASADOR DE RESORTE				1		
23	92012–10040	...BOLT, BUTTON HEAD ...PERNO				1		
24	93505–32038	...BALL ...BOLA				11		
25	65W–4385A–01	...PISTON, TILT ...PISTON INCLINACION				1		
26	65W–4386A–00	...PIN, ABSORBER VALVE ...PASADOR VALVULA ABSORBER				5		
27	65W–43857–00	...SPRING, ABSORBER VALVE ...RESORTE				5		

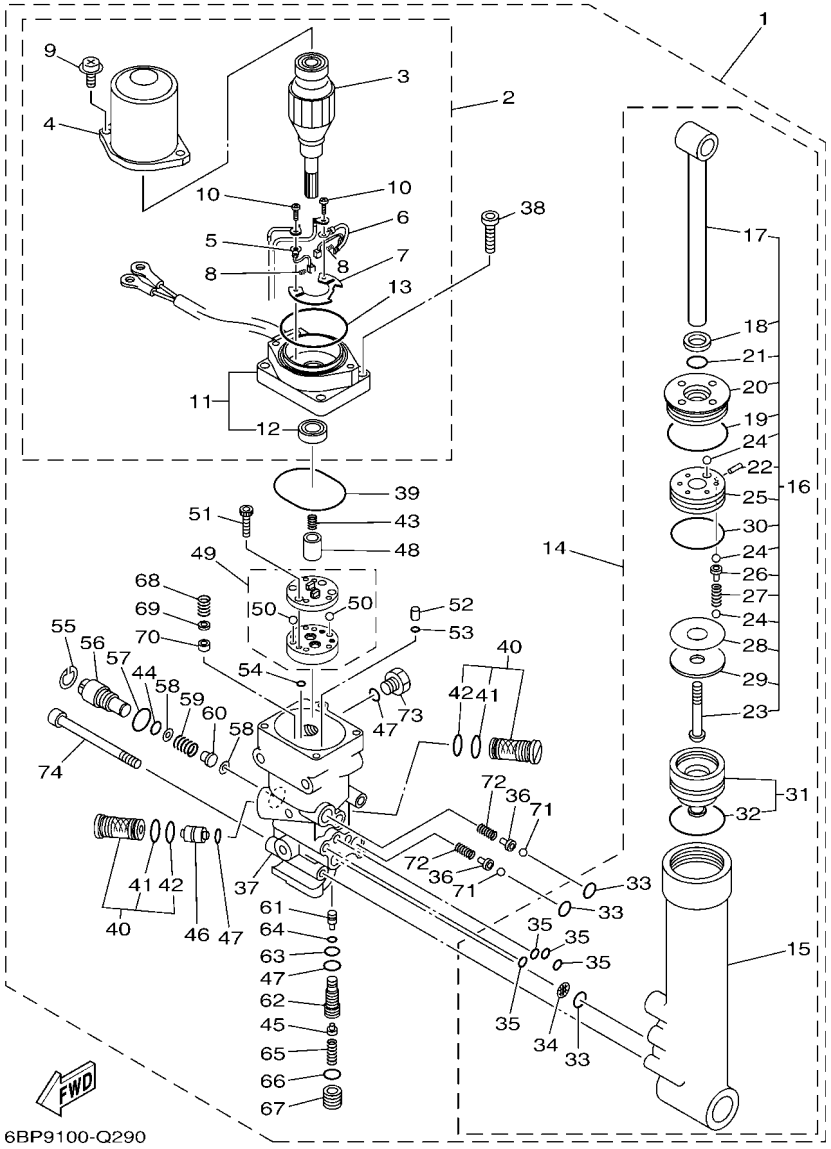

FIG. 22 POWER TRIM & TILT ASSY — COMPONER Y PODER VARILLA

REF. NO.	PART NO. CODIGO Nº	DESCRIPTION DESCRIPCION	MH	WH	W	WT		REMARKS OBSERVACIONES
28	15A–22442–00	...SHIM ...CUNA				1		UN UN
29	90201–10038	...WASHER, PLATE ...ARANDELA PLANA				1		
30	6H1–43862–00	...O-RING ...ANILLO EN O 2				1		
31	65W–4381B–00	..FREE PISTON SUB ASSY ..SUB-PISTON COMPL				1		
32	6H1–43861–10	...O-RING ...ANILLO EN O 1				1		
33	93210–11368	..O-RING ..ANILLO O				3		
34	69J–4381C–00	..FILTER 3 ..FIELTRO 3				1		
35	93210–064A5	..O-RING ..ANILLO O				4		
36	65W–4386A–00	.PIN, ABSORBER VALVE .PASADOR VALVULA ABSORBER				2		
37	65W–4380L–04	.HOUSING, TRIM & TILT SUB ASSY .CAJA, INCLINACION Y ADRNO				1		
38	91380–06020	.BOLT .PERNO				4		
39	93210–50768	.O-RING .ANILLO O				1		
40	67F–43802–00	.VALVE SUB ASSY .VALVULA PRINCIPAL COMPL.				2		
41	6H1–43866–01	..O-RING ..ANILLO EN O 6				1		
42	93210–12N52	..O-RING ..ANILLO O				1		
43	6T4–43853–00	.SPRING, MAIN VALVE .RESORTE				1		
44	93210–10M74	.O-RING .ANILLO O				1		
45	6T4–43808–00	.SEAT VALVE COMP. 1 .ASIENTO VALVULA COMPLETA 1				1		
46	62X–43841–00	.PISTON, SHUTTLE .PISTON				1		
47	93210–09165	.O-RING .ANILLO O				3		
48	65W–43831–00	.CONNECTOR, SHAFT .CONEXION EJE				1		
49	65W–43830–00	.GEAR PUMP ASSY .ENGRANAJE BOMBA COMPL.				1		
50	93505–32038	..BALL ..BOLA				2		
51	91318–04025	.BOLT .TORNILLO				4		
52	65W–43817–00	.FILTER 2 .FIELTRO 2				2		
53	93210–04N50	.O-RING .ANILLO O				2		
54	93210–04N51	.O-RING .ANILLO O				2		

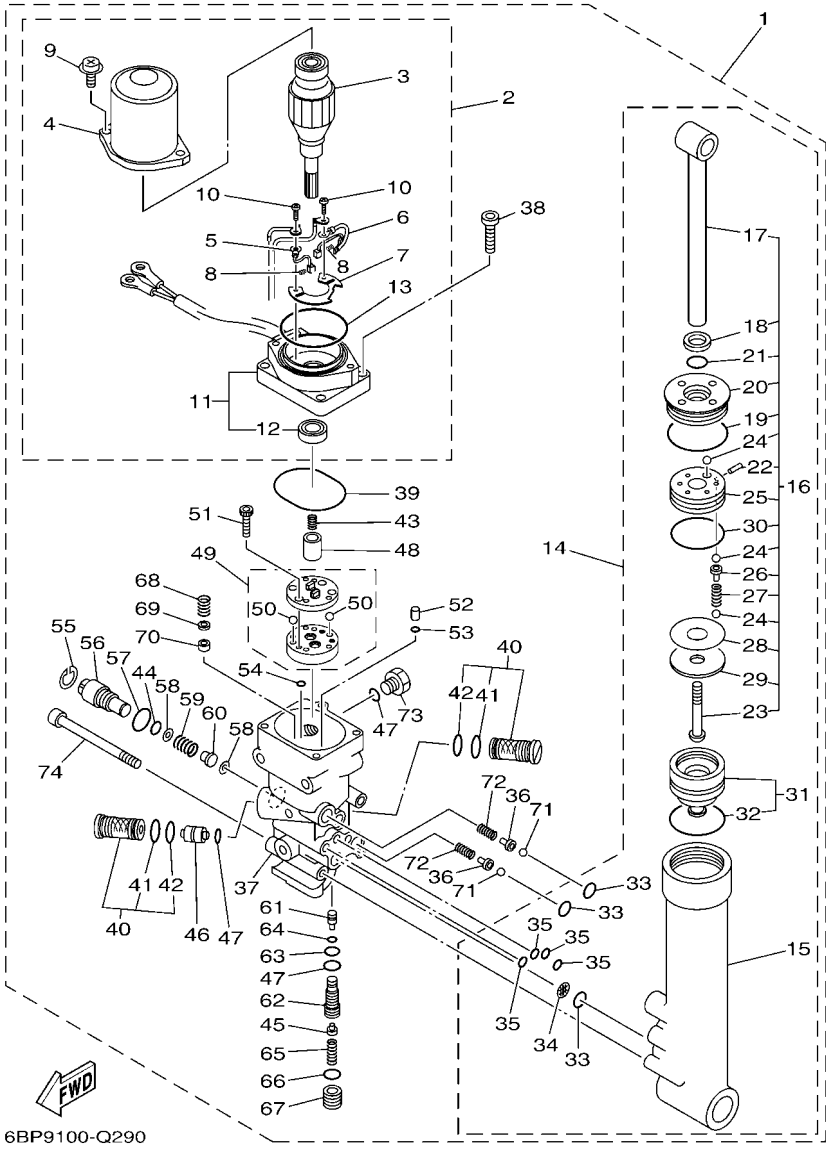

FIG. 22 POWER TRIM & TILT ASSY — COMPONER Y PODER VARILLA

REF. NO.	PART NO. CODIGO Nº	DESCRIPTION DESCRIPCION	MH	WH	W	WT		REMARKS OBSERVACIONES
55	6H1–43875–00	.RING, SNAP .ANILLO				1		
56	6H1–43845–00	.SCREW, MANUAL RELEASE .TORNILLO DESCOPLO MANUAL				1		
57	6D8–43863–00	.O-RING .ANILLO EN O 3				1		
58	6H1–43847–00	.SEAT, MANUAL VALVE .ASIENTO VALVULA MANUAL				2		
59	65W–43854–00	.SPRING, MANUAL RELEASE .RESORTE DESCOPLO MANUAL				1		
60	65W–4382A–00	.ADAPTOR 1 .ADAPTADOR 1				1		
61	65W–43844–00	.PIN, VALVE SUPPORT .PASADOR VALVULA SOPORTE				1		
62	65W–43851–00	.SEAT, RELIEF VALVE .ASIENTO VALVULA DE DESCARGA				1		
63	93210–08006	.O-RING .ANILLO O				1		
64	93210–03478	.O-RING .ANILLO O				1		
65	65W–43855–00	.SPRING, UP RELIEF .RESORTE SEGURIDAD SUPERIOR				1		
66	93210–11073	.O-RING .ANILLO O				1		
67	65W–43843–00	.SCREW, VALVE LOCK .TORNILLO				1		
68	6H1–43856–10	.SPRING, DOWN RELIEF .RESORTE SEGURIDAD				1		
69	6H1–43844–10	.PIN, VALVE SUPPORT .PASADOR VALVULA SOPORTE				1		
70	6H1–4384F–10	.SEAL, MAIN VALVE .ASIENTO				1		
71	93501–08001	.BALL .BOLA				2		
72	65W–43853–00	.SPRING, MAIN VALVE .RESORTE				2		
73	6H1–43829–00	.PLUG, RESERVOIR .TAPON DEPOSITO				1		
74	62X–43878–01	.BOLT, SOCKET .TORNILLO ENCASTRE				3		

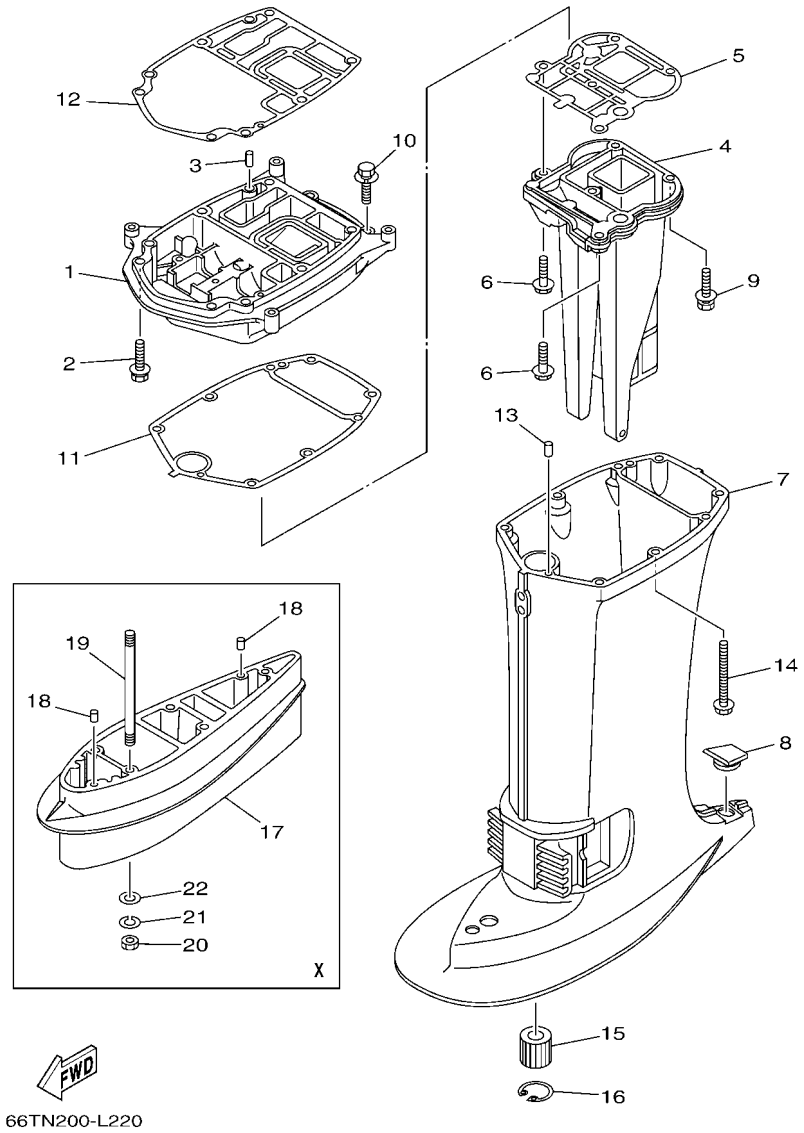

FIG. 23 UPPER CASING — FUNDA SUPERIOR

REF. NO.	PART NO. CODIGO Nº	DESCRIPTION DESCRIPCION	MH	WH	W	WT		REMARKS OBSERVACIONES
1	66T–41137–A0–CA	GUIDE, EXHAUST GUIA DE ESCAPE	1	1	1	1		
2	90119–08183	BOLT, WITH WASHER TORNILLO CON ARANDELA	2	2	2	2		
3	93606–12019	PIN, DOWEL PASADOR DE CLAVIJA	2	2	2	2		
4	66T–41131–00–CA	MANIFOLD, EXT. 1 TUBO MULTIPLE DE ESCAPE	1		1			S(16.7") S(16.7")
	66T–41131–10–CA	MANIFOLD, EXT. 1 TUBO MULTIPLE DE ESCAPE	1	1	1	1		L(21.7"),X(25.6") L(21.7"),X(25.6")
5	66T–41133–A0	GASKET, EXHAUST MANIFOLD 1 EMPAQUE ESCAPE MULTIPLE	1	1	1	1		
6	97E75–08530	BOLT, HEXAGON W/W DEEP RECESS TORNILLO HEXAGONAL CON RONDONA	2	2	2	2		
7	66T–45111–00–8D	CASING, UPPER CAJA SUPERIOR	1		1			S(16.7") S(16.7")
	66T–45111–10–8D	CASING, UPPER CAJA SUPERIOR	1	1	1	1		L(21.7"),X(25.6") L(21.7"),X(25.6")
8	63D–45155–00	CAP TAPA	1	1	1	1		
9	97E75–08545	BOLT, HEXAGON W/W DEEP RECESS TORNILLO HEXAGONAL CON RONDONA	3	3	3	3		
10	97E75–08530	BOLT, HEXAGON W/W DEEP RECESS TORNILLO HEXAGONAL CON RONDONA	2	2	2	2		
11	66T–45114–A0	GASKET, UPPER CASING EMPAQUE	1	1	1	1		
12	66T–45113–A0	GASKET, UPPER CASING EMPAQUE	1	1	1	1		
13	93606–12019	PIN, DOWEL PASADOR DE CLAVIJA	2	2	2	2		
14	90119–08203	BOLT, WITH WASHER TORNILLO CON ARANDELA	6	6	6	6		
15	679–45318–00	BUSHING, DRIVE SHAFT BUJE, EJE DE MANDO	1	1	1	1		L(21.7"),X(25.6") L(21.7"),X(25.6")
16	93420–30042	CIRCLIP SEGURO	1	1	1	1		L(21.7"),X(25.6") L(21.7"),X(25.6")
17	66T–45211–00–8D	EXTENSION EXTENSION	1					X(25.6") X(25.6")
18	93606–12019	PIN, DOWEL PASADOR DE CLAVIJA	2					X(25.6") X(25.6")
19	90116–10M23	BOLT, STUD ESPARRAGO	4					X(25.6") X(25.6")
20	95380–10600	NUT TUERCA	4					X(25.6") X(25.6")
21	92990–10100	WASHER, SPRING ARANDELA PLANA	4					X(25.6") X(25.6")
22	92990–10600	WASHER, PLATE ARANDELA PLANA	4					X(25.6") X(25.6")

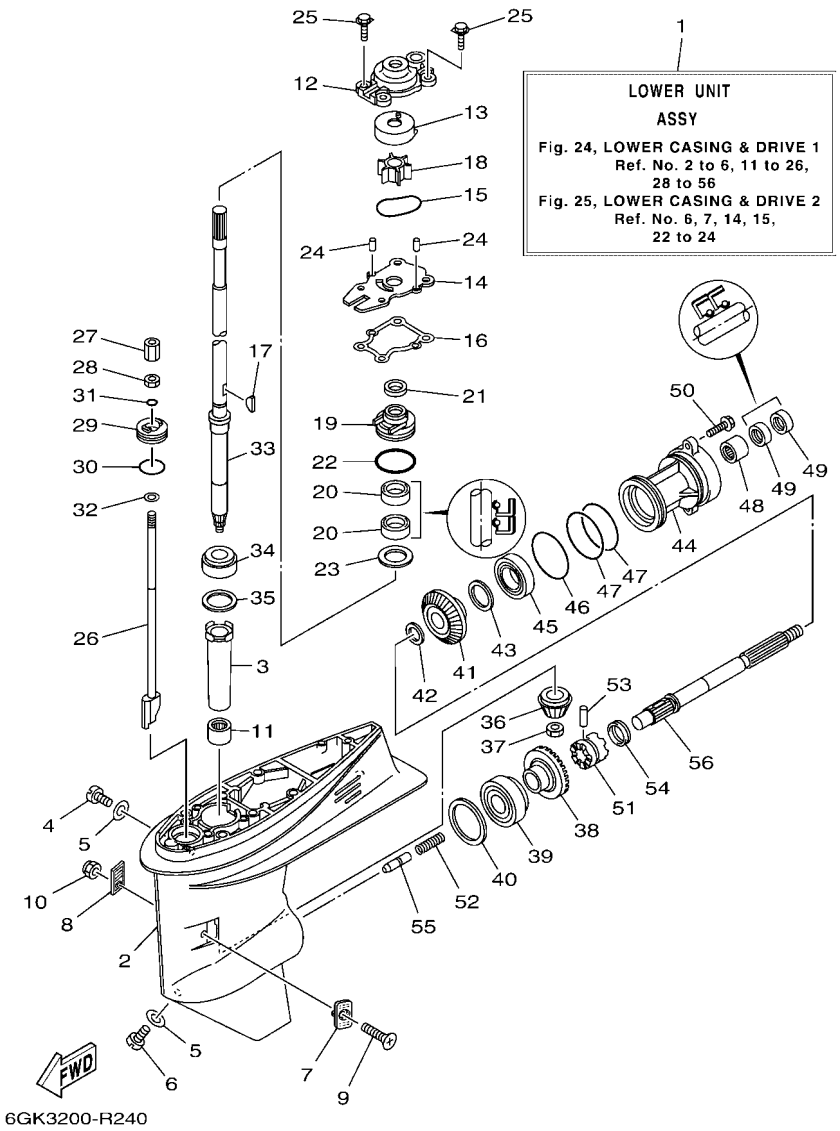

FIG. 24 LOWER CASING & DRIVE 1 — IMPULSOR E INFERIOR 1

REF. NO.	PART NO. CODIGO Nº	DESCRIPTION DESCRIPCION	MH	WH	W	WT		REMARKS OBSERVACIONES
1	66T–45300–03–8D	LOWER UNIT ASSY CONJUNTO UNIDAD INFERIOR	1		1			S(16.7") S(16.7")
	66T–45300–13–8D	LOWER UNIT ASSY CONJUNTO UNIDAD INFERIOR	1	1	1	1		L(21.7") L(21.7")
	66T–45300–32–8D	LOWER UNIT ASSY CONJUNTO UNIDAD INFERIOR	1					X(25.6") X(25.6")
2	66T–45311–01–8D	CASING, LOWER FUNDA INFERIOR	1	1	1	1		
3	6H4–45536–00	SLEEVE, DRIVE SHAFT CAMISA EJE DE MANDO	1	1	1	1		
4	90340–08002	PLUG, STRAIGHT SCREW TORNILLO, DE DRENAJE	1	1	1	1		
5	90430–08003	GASKET JUNTA	2	2	2	2		
6	688–45341–10	PLUG, DRAIN TAPON, DREN	1	1	1	1		
7	63D–45214–00	COVER, WATER INLET 1 CUBIERTA, ENTRADA AGUA 1	1	1	1	1		
8	63D–45215–00	COVER, WATER INLET 2 CUBIERTA, ENTRADA AGUA 2	1	1	1	1		
9	90152–05010	SCREW, COUNTERSUNK TORNILLO EMBUTIDO	1	1	1	1		
10	95380–05600	NUT TUERCA	1	1	1	1		
11	93315–32224	BEARING COJINETE DE RODILLOS	1	1	1	1		
12	66T–44311–00	HOUSING, WATER PUMP CAJA BOMBA DE AGUA	1	1	1	1		
13	63D–44322–00	INSERT, CARTRIDGE CARTUCHO				1		FOR STD FOR STD
	63D–44322–40	INSERT, CARTRIDGE CARTUCHO	1	1	1	1		FOR CHROMATE FOR CHROMATE
14	66T–44323–00	OUTER PLATE, CARTRIDGE PLACA EXTERIOR DEL CARTUCHO				1		FOR STD FOR STD
	66T–44323–40	OUTER PLATE, CARTRIDGE PLACA EXTERIOR DEL CARTUCHO	1	1	1	1		FOR CHROMATE FOR CHROMATE
15	93210–59MG7	O-RING ANILLO O	1	1	1	1		
16	63D–44316–00	GASKET, WATER PUMP EMPAQUE	1	1	1	1		
17	90280–03M03	KEY, WOODRUFF CUNA WOODRUFF	1	1	1	1		
18	6H4–44352–02	IMPELLER IMPULSOR	1	1	1	1		
19	6BG–44341–00	HOUSING, WATER PUMP CAJA BOMBA DE AGUA	1	1	1	1		
20	93101–22M60	OIL SEAL SELLO ACEITE	2	2	2	2		
21	66T–45344–01	COVER, OIL SEAL CUBIERTA SELLO ACEITE	1	1	1	1		
22	93210–48001	O-RING ANILLO O	1	1	1	1		
23	90201–27M00	WASHER, PLATE ARANDELA PLANA	1	1	1	1		

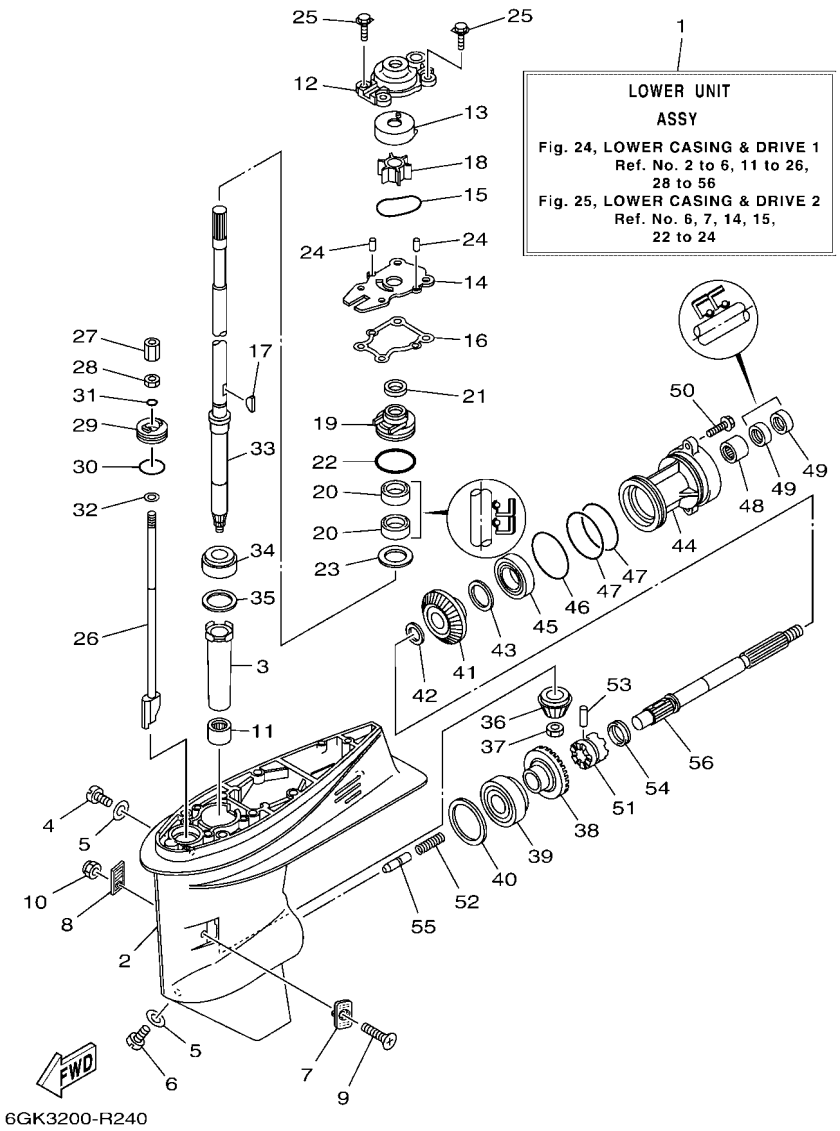

FIG. 24 LOWER CASING & DRIVE 1 — IMPULSOR E INFERIOR 1

REF. NO.	PART NO. CODIGO Nº	DESCRIPTION DESCRIPCION	MH	WH	W	WT		REMARKS OBSERVACIONES
24	93604–08062	PIN, DOWEL PASADOR DE CLAVIJA	2	2	2	2		
25	90119–08185	BOLT, WITH WASHER TORNILLO CON ARANDELA	4	4	4	4		
26	66T–44150–01	SHIFT CAM ASSY CONJUNTO EJE LEVA COMPL.	1		1			S(16.7") S(16.7")
	66T–44150–11	SHIFT CAM ASSY CONJUNTO EJE LEVA COMPL.	1	1	1	1		L(21.7") L(21.7")
	66T–44150–21	SHIFT CAM ASSY CONJUNTO EJE LEVA COMPL.	1					X(25.6") X(25.6")
27	61N–44146–00	CONNECTOR, SHIFT ROD 2 CONECTOR VARILLA DE CAMBIO 2	1	1	1	1		
28	95380–06700	NUT TUERCA	1	1	1	1		
29	66T–45321–00	PLATE PLACA	1	1	1	1		
30	93210–33MG4	O-RING ANILLO O	1	1	1	1		
31	93210–06ME6	O-RING ANILLO O	1	1	1	1		
32	92990–06600	WASHER, PLATE ARANDELA PLANA	1	1	1	1		
33	66T–45501–01	DRIVE SHAFT COMP. EJE DE MANDO COMPL.	1		1			S(16.7") S(16.7")
	66T–45501–11	DRIVE SHAFT COMP. EJE DE MANDO COMPL.	1	1	1	1		L(21.7") L(21.7")
	66T–45501–21	DRIVE SHAFT COMP. EJE DE MANDO COMPL.	1					X(25.6") X(25.6")
34	93332–00001	BEARING COJINETE	1	1	1	1		
35	663–45587–01	SHIM (T:0.10MM) LAINA (T:0.10MM)	1	1	1	1		UR UR
	663–45587–10	SHIM (T:0.12MM) LAINA (T:0.12MM)	1	1	1	1		UR UR
	663–45587–20	SHIM (T:0.15MM) LAINA (T:0.15MM)	1	1	1	1		UR UR
	663–45587–30	SHIM (T:0.18MM) LAINA (T:0.18MM)	1	1	1	1		UR UR
	663–45587–40	SHIM (T:0.30MM) LAINA (T:0.30MM)	1	1	1	1		UR UR
	663–45587–50	SHIM (T:0.40MM) LAINA (T:0.40MM)	1	1	1	1		UR UR
	663–45587–60	SHIM (T:0.50MM) LAINA (T:0.50MM)	1	1	1	1		UR UR
36	66T–45551–00	PINION (13T) PINON (13T)	1	1	1	1		
37	90170–12138	NUT TUERCA	1	1	1	1		
38	66T–45560–01	GEAR 1 (26T) ENGRANAJE 1 (26T)	1	1	1	1		
39	93332–00003	BEARING COJINETE	1	1	1	1		
40	663–45567–01	SHIM (T:0.10MM) LAINA (T:0.10MM)	1	1	1	1		UR UR

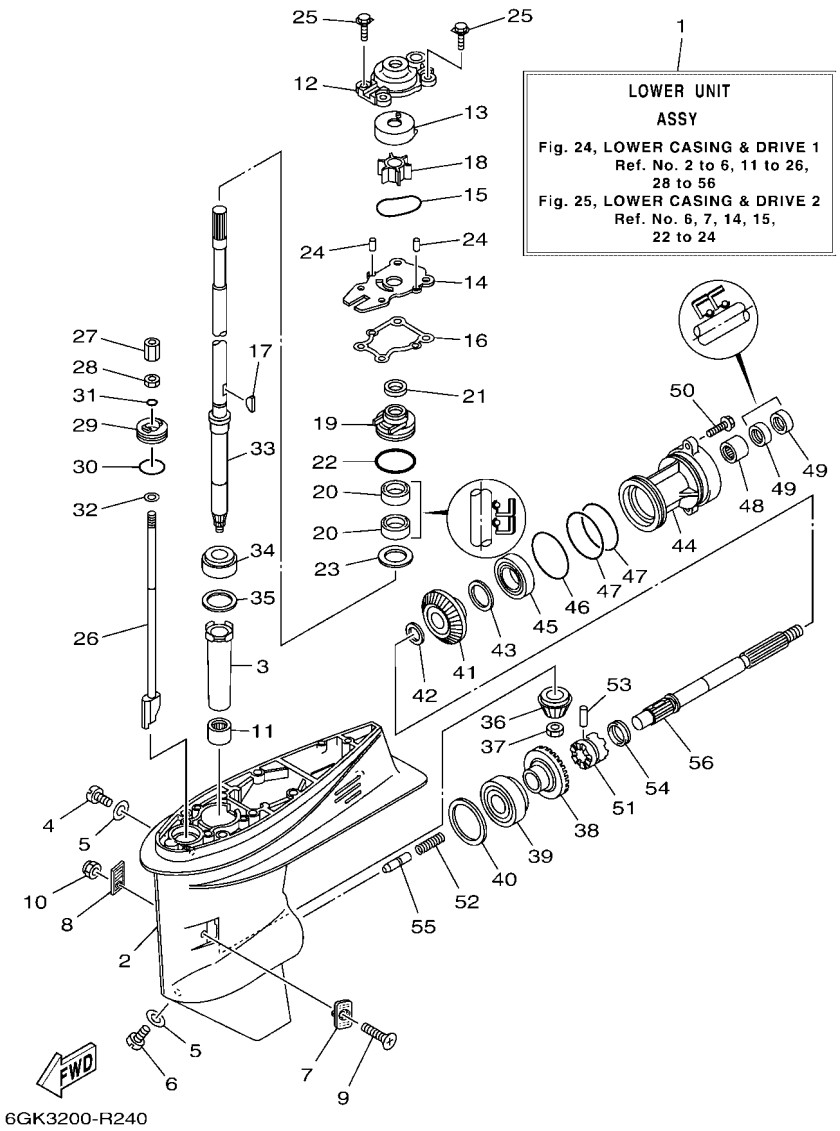

FIG. 24 LOWER CASING & DRIVE 1 — IMPULSOR E INFERIOR 1

REF. NO.	PART NO. CODIGO Nº	DESCRIPTION DESCRIPCION	MH	WH	W	WT		REMARKS OBSERVACIONES
40	663–45567–10	SHIM (T:0.12MM) LAINA (T:0.12MM)	1	1	1	1		UR UR
	663–45567–20	SHIM (T:0.15MM) LAINA (T:0.15MM)	1	1	1	1		UR UR
	663–45567–30	SHIM (T:0.18MM) LAINA (T:0.18MM)	1	1	1	1		UR UR
	663–45567–40	SHIM (T:0.30MM) LAINA (T:0.30MM)	1	1	1	1		UR UR
	663–45567–50	SHIM (T:0.40MM) LAINA (T:0.40MM)	1	1	1	1		UR UR
	663–45567–60	SHIM (T:0.50MM) LAINA (T:0.50MM)	1	1	1	1		UR UR
41	66T–45571–00	GEAR 2 (26T) ENGRANAJE 2 (26T)	1	1	1	1		
42	90201–22429	WASHER, PLATE ARANDELA PLANA	1	1	1	1		
43	63D–45577–00	SHIM (T:0.10MM) LAINA (T:0.10MM)	1	1	1	1		UR UR
	63D–45577–10	SHIM (T:0.12MM) LAINA (:0.12MM)	1	1	1	1		UR UR
	63D–45577–20	SHIM (T:0.15MM) LAINA (T:0.15MM)	1	1	1	1		UR UR
	63D–45577–30	SHIM (T:0.18MM) LAINA (T:0.18MM)	1	1	1	1		UR UR
	63D–45577–40	SHIM (T:0.30MM) LAINA (T:0.30MM)	1	1	1	1		UR UR
	63D–45577–50	SHIM (T:0.40MM) LAINA (T:0.40MM)	1	1	1	1		UR UR
	63D–45577–60	SHIM (T:0.50MM) LAINA (T:0.50MM)	1	1	1	1		UR UR
44	63D–45361–02–8D	CAP, LOWER CASING FUNDA INFERIOR	1	1	1	1		
45	93306–001U1	BEARING COJINETE	1	1	1	1		
46	93210–69MG6	O-RING ANILLO O	1	1	1	1		
47	93210–74MG5	O-RING ANILLO O	2	2	2	2		
48	93317–22204	BEARING COJINETE	1	1	1	1		
49	93101–22M00	OIL SEAL SELLO ACEITE	2	2	2	2		
50	90105–08M61	BOLT, FLANGE TORNILLO	2	2	2	2		
51	66T–45631–00	CLUTCH, DOG EMBRAGUE DE GARRA	1	1	1	1		
52	90501–15M01	SPRING, COMPRESSION RESORTE DE COMPRESION	1	1	1	1		
53	90250–06023	PIN, STRAIGHT PASADOR CILINDRICO	1	1	1	1		
54	663–45633–00	RING, CROSS PIN ANILLO DE PASADOR	1	1	1	1		
55	66T–45635–00	PLUNGER, SHIFT EMBOLO DE CAMBIO	1	1	1	1		

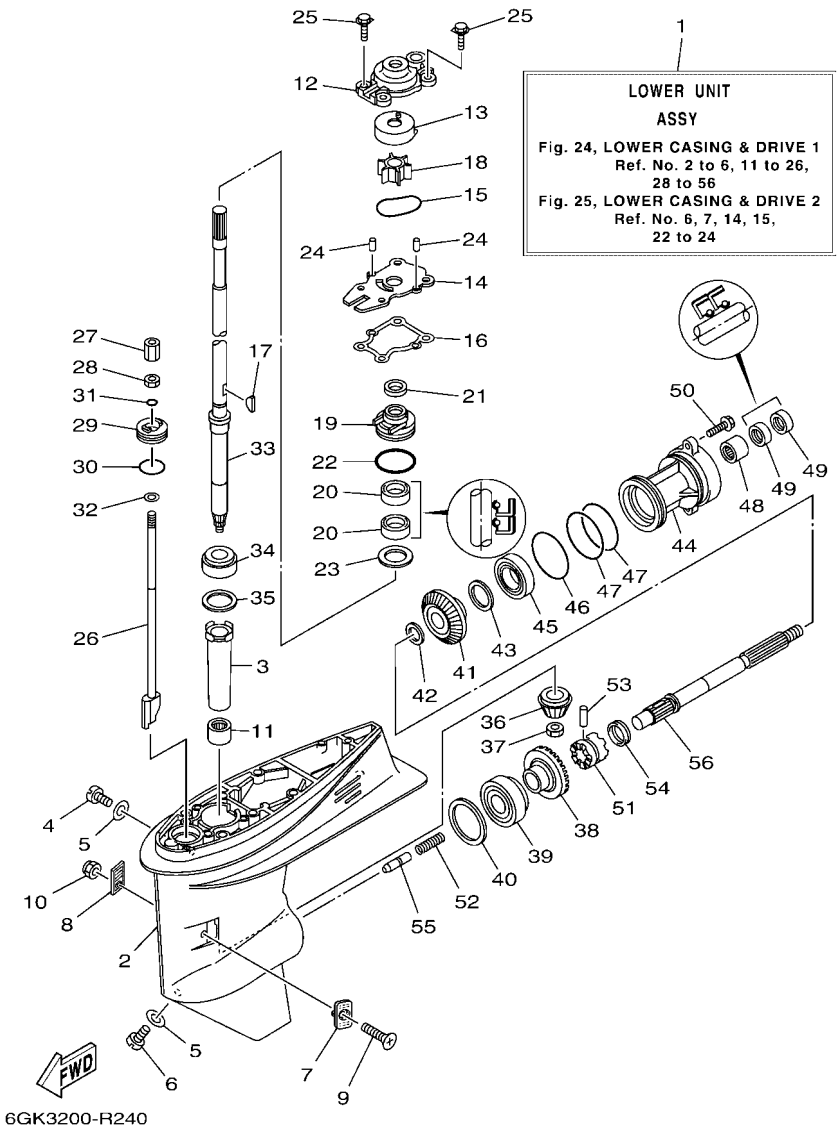

FIG. 24 LOWER CASING & DRIVE 1 — IMPULSOR E INFERIOR 1

REF. NO.	PART NO. CODIGO Nº	DESCRIPTION DESCRIPCION	MH	WH	W	WT		REMARKS OBSERVACIONES
56	66T–45611–00	SHAFT, PROPELLER EJE PROPUSOR	1	1	1	1		

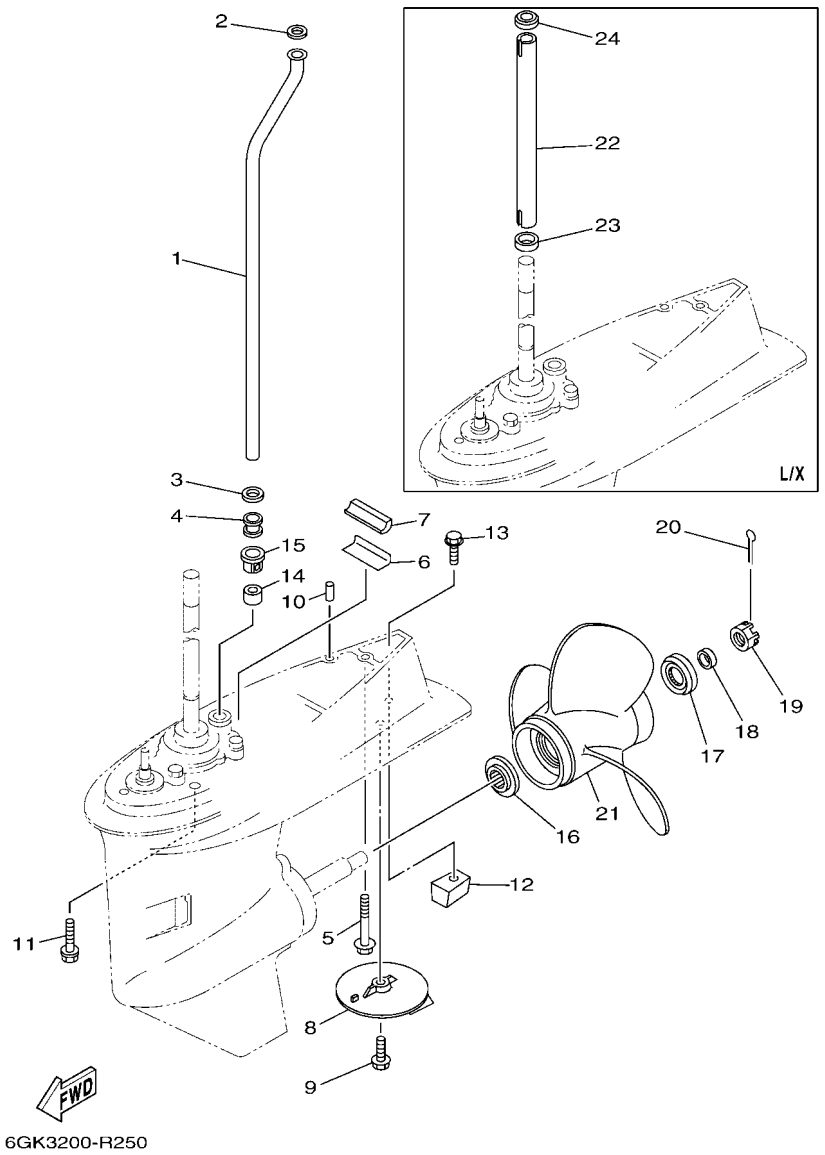

FIG. 25 LOWER CASING & DRIVE 2 — IMPULSOR E INFERIOR 2

REF. NO.	PART NO. CODIGO Nº	DESCRIPTION DESCRIPCION	MH	WH	W	WT		REMARKS OBSERVACIONES
1	66T–44361–00	TUBE, WATER 1 TUBO DE AGUA 1	1		1			S(16.7") S(16.7")
	66T–44361–10	TUBE, WATER 1 TUBO DE AGUA 1	1	1	1	1		L(21.7") L(21.7")
	66T–44361–20	TUBE, WATER 1 TUBO DE AGUA 1	1					X(25.6") X(25.6")
2	90202–12060	WASHER, PLATE ARANDELA DE PLANA	1	1	1	1		
3	90430–12072	GASKET JUNTA	1	1	1	1		
4	663–44367–00	DAMPER, WATER SEAL 3 GOMA DEL SELLO DE AGUA 3	1	1	1	1		
5	97E75–08565	BOLT, HEXAGON W/W DEEP RECESS TORNILLO HEXAGONAL CON RONDONA	1	1	1	1		S(16.7"),L(21.7") S(16.7"),L(21.7")
	90119–08156	BOLT, WITH WASHER TORNILLO CON ARANDELA	1					X(25.6") X(25.6")
6	663–45376–00	GUIDE, SEAL DAMPER GUIA DE SELLO GOMA	1	1	1	1		
7	63D–45375–00	DAMPER, SEAL GOMA DE SELLO	1	1	1	1		
8	664–45371–01	TAB-TRIM QUILLA ESTABILIZADOR	1	1	1	1		
9	97E95–08525	BOLT, HEXAGON W/W DEEP RECESS TORNILLO HEXAGONAL CON RONDONA	1	1	1	1		
10	93606–12019	PIN, DOWEL PASADOR DE CLAVIJA	2	2	2	2		
11	97E75–10640	BOLT, HEXAGON W/W DEEP RECESS TORNILLO HEXAGONAL CON RONDONA	4	4	4	4		S(16.7"),L(21.7") S(16.7"),L(21.7")
12	67C–45251–00	ANODE CATODE	1	1	1	1		
13	97E95–08535	BOLT, HEXAGON W/W DEEP RECESS TORNILLO HEXAGONAL CON RONDONA	1	1	1	1		
14	663–44366–00	DAMPER, WATER SEAL 2 GOMA DEL SELLO DE AGUA 2	1	1	1	1		
15	63D–44312–00	COVER, WATER PUMP HOUSING CUBIERTA CAJA BOMBA DE AGUA	1	1	1	1		
16	663–45987–02	SPACER 1 ESPACIADOR 1	1	1	1	1		
17	66T–45997–00	SPACER 2 ESPACIADOR 2	1	1	1	1		
18	90389–22M01	BUSH BUJE	1	1	1	1		
19	90171–16011	NUT, CASTLE TUERCA ENTALLADA	1	1	1	1		
20	91490–30025	PIN. COTTER CHAVETA	1	1	1	1		
21	63D–45941–00	PROPELLER (3X12-1/4"X8"-G) PROPELA (3X12-1/4"X8"-G)	1	1	1	1		UR UR
	663–45956–01	PROPELLER (3X12-1/4"X9"-G) PROPELA (3X12-1/4"X9"-G)	1	1	1	1		UR UR
	663–45954–01	PROPELLER (3X11-3/4"X10"-G) PROPELA (3X11-3/4"X10"-G)	1	1	1	1		UR UR
	69W–45947–00	PROPELLER (3X11-5/8"X11"-G) PROPELA (3X11-5/8"X11"-G)	1	1	1	1		UR UR

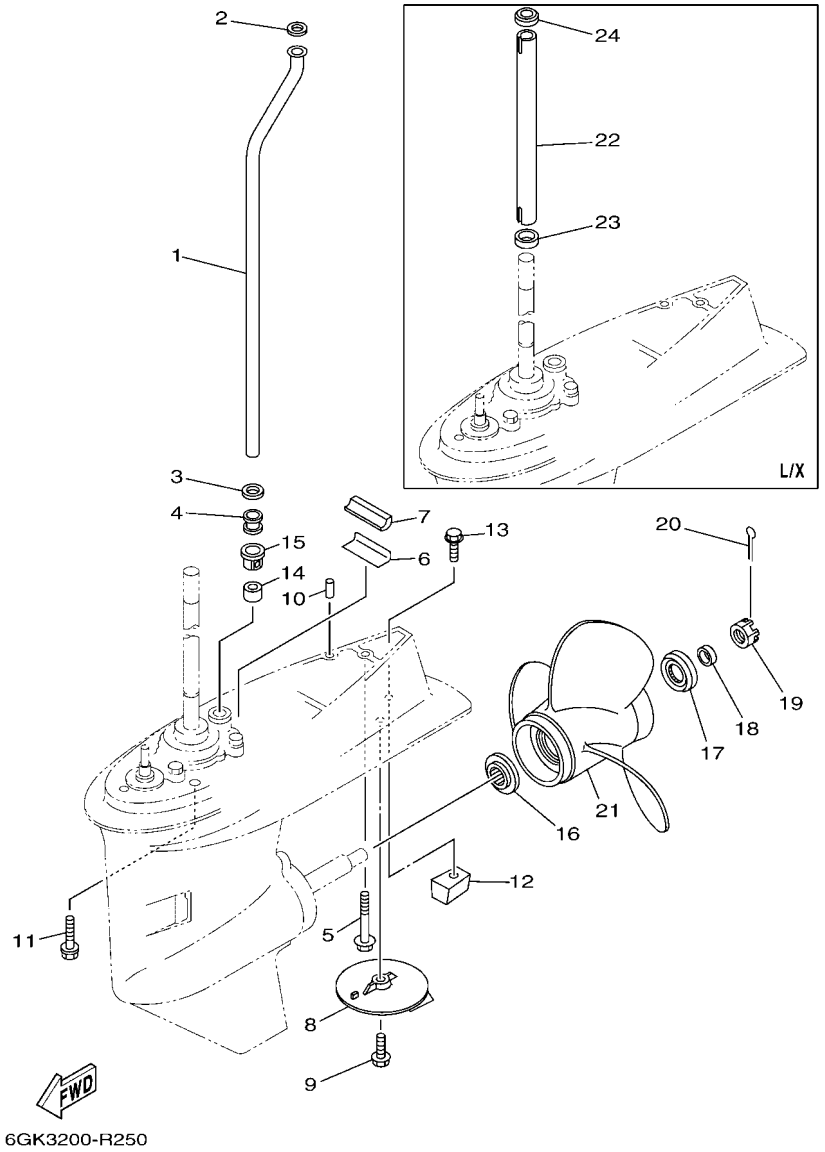

FIG. 25 LOWER CASING & DRIVE 2 — IMPULSOR E INFERIOR 2

REF. NO.	PART NO. CODIGO Nº	DESCRIPTION DESCRIPCION	MH	WH	W	WT		REMARKS OBSERVACIONES
21	663–45972–60	PROPELLER (3X12"X11"-G) PROPELA (3X12"X11"-G)	1	1	1	1		UR UR
	663–45952–02	PROPELLER (3X11-3/8"X12"-G) PROPELA (3X11-3/8"X12"-G)	1	1	1	1		UR UR
	69W–45952–00	PROPELLER (3X11-3/8"X12"-G) PROPELA (3X11-3/8"X12"-G)	1	1	1	1		UR UR
	663–45970–60	PROPELLER (3X11-3/4"X12"-G) PROPELA (3X11-3/4"X12"-G)	1	1	1	1		UR UR
	69W–45945–00	PROPELLER (3X11-1/8"X13"-G) PROPELA (3X11-1/8"X13"-G)	1	1	1	1		UR UR
	663–45974–60	PROPELLER (3X11-1/2"X13"-G) PROPELA (3X11-1/2"X13"-G)	1	1	1	1		UR UR
	663–45930–00	PROPELLER (3X10-1/4"X14"-G) PROPELA (3X10-1/4"X14"-G)	1	1	1	1		UR UR
	69W–45958–00	PROPELLER (3X11-1/4"X14"-G) PROPELA (3X11-1/4"X14"-G)	1	1	1	1		UR UR
	663–45958–01	PROPELLER (3X11-1/4"X14"-G) PROPELA (3X11-1/4"X14"-G)	1	1	1	1		UR UR
	69W–45943–00	PROPELLER (3X11"X15"-G) PROPELA (3X11"X15"-G)	1	1	1	1		UR UR
	663–45976–00	PROPELLER (3X10-1/4"X15"-G) PROPELA (3X10-1/4"X15"-G)	1	1	1	1		UR UR
	663–45949–01	PROPELLER (3X10-3/4"X16"-G) PROPELA (3X10-3/4"X16"-G)	1	1	1	1		UR UR
	663–45978–00	PROPELLER (3X10-1/4"X16"-G) PROPELA (3X10-1/4"X16"-G)	1	1	1	1		UR UR
	663–45941–01	PROPELLER (3X10-3/4"X17"-G) PROPELA (3X10-3/4"X17"-G)	1	1	1	1		UR UR
22	66T–44362–30	TUBE, WATER 2 TUBO DE AGUA 2	1	1	1	1		L(21.7") L(21.7")
	66T–44362–20	TUBE, WATER 2 TUBO DE AGUA 2	1					X(25.6") X(25.6")
23	90480–25M70	GROMMET TAPON	1	1	1	1		L(21.7"),X(25.6") L(21.7"),X(25.6")
24	90480–30M71	GROMMET TAPON	1	1	1	1		L(21.7"),X(25.6") L(21.7"),X(25.6")

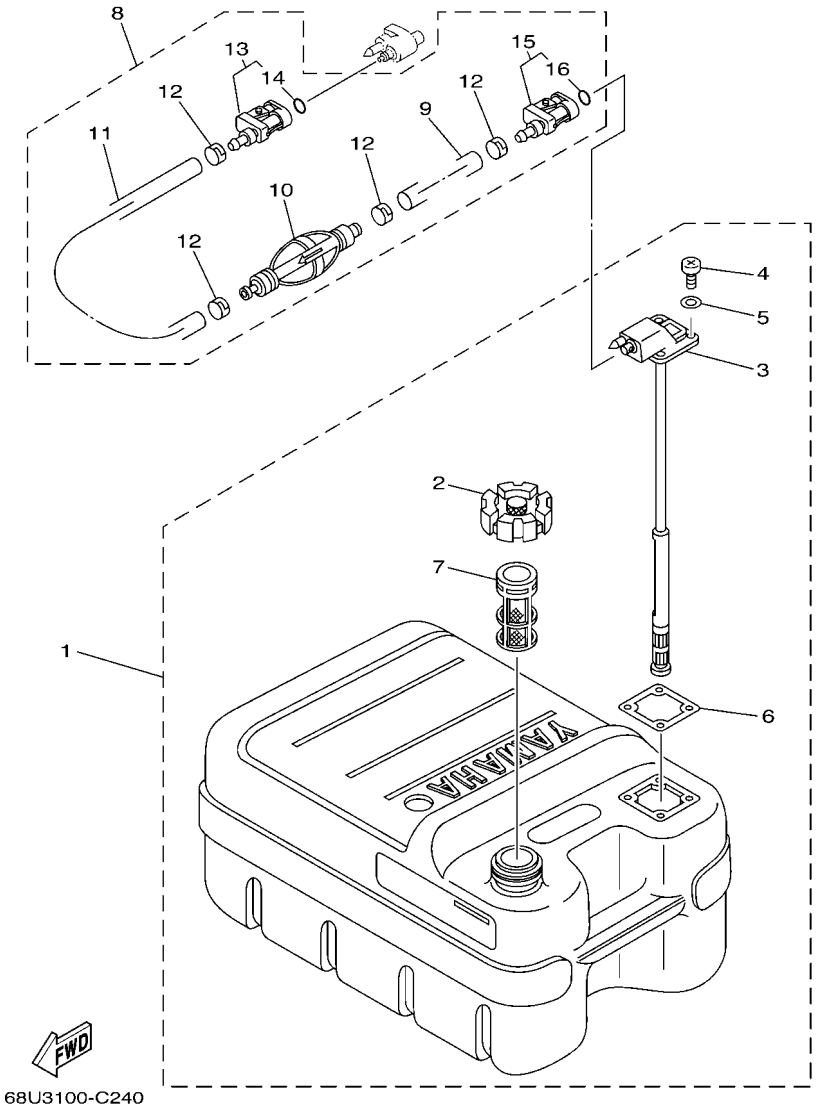

FIG. 26 FUEL TANK — DEPOSITO DE COMBUSTIBLE

REF. NO.	PART NO. CODIGO Nº	DESCRIPTION DESCRIPCION	MH	WH	W	WT		REMARKS OBSERVACIONES
1	6YJ–24201–20	FUEL TANK ASSY (24L) TANQUE DEL COMBUSTIBLE (24L)	1	1	1	1		AP EXCEPT TWN,AFR AP EXCEPT TWN,AFR
	6YJ–24201–30	FUEL TANK ASSY (24L) TANQUE DEL COMBUSTIBLE (24L)		1		1		AP TWN,AFR AP TWN,AFR
2	6YJ–24610–01	.CAP ASSY .TAPA COMPLETA	1	1	1	1		
3	6YJ–24260–10	.FUEL METER ASSY .MEDIDOR DE COMBUSTIBLE COMPL.	1	1	1	1		FOR 6YJ-24201-20 FOR 6YJ-24201-20
	6Y1–24260–30	.FUEL METER ASSY .MEDIDOR DE COMBUSTIBLE COMPL.		1		1		FOR 6YJ-24201-30 WITH INDICATOR FOR 6YJ-24201-30 WITH INDICATOR
4	90157–05M19	.SCREW, PAN HEAD .TORNILLO CABEZA CONICA PLANA	4	4	4	4		
5	6Y1–24329–00	.SEAL .SELLO	4	4	4	4		
6	6Y1–24268–00	.GASKET, FUEL METER .EMPAQ MEDIDOR DE COMBUSTIBLE	1	1	1	1		
7	6YJ–24167–00	.STRAINER .COLADOR	1	1	1	1		
8	61J–24306–04	FUEL PIPE COMP. 1 TUBO COMBUST. COMPL 1	1	1	1	1		AP AP
9	90445–11M06	.HOSE (L2050) .MANGUERA (L2050)	1	1	1	1		
10	61J–24360–00	.PRIMER PUMP ASSY .SOPORTE BOMBA	1	1	1	1		
11	90445–11M05	.HOSE (L850) .MANGUERA (L850)	1	1	1	1		
12	650–24351–51	.BAND 1 .ABRAZADERA 1	4	4	4	4		
13	6G1–24305–05	.FUEL PIPE JOINT COMP. 2 .CONECTOR MANGUERA COMBUST. 2	1	1	1	1		
14	93210–08287	..O-RING ..ANILLO O	1	1	1	1		
15	6Y1–24305–06	.FUEL PIPE JOINT COMP. 2 .CONECTOR MANGUERA COMBUST. 2	1	1	1	1		
16	93210–08287	..O-RING ..ANILLO O	1	1	1	1		

FIG. 27 STEERING GUIDE — DIRECCIONGUIAR

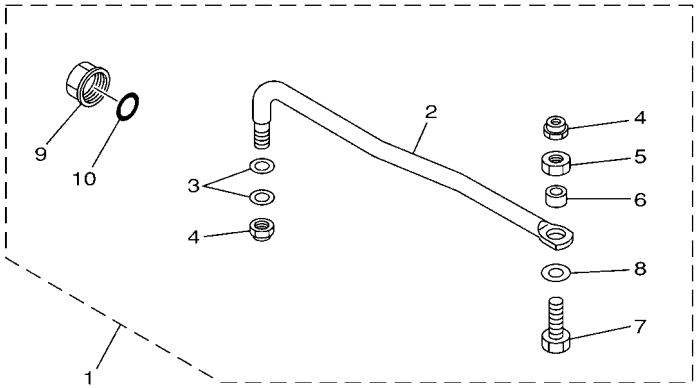

65W0010-8210

REF. NO.	PART NO. CODIGO Nº	DESCRIPTION DESCRIPCION	MH	WH	W	WT		REMARKS OBSERVACIONES
1	65W–61350–00	STEERING GUIDE ATTACHMENT KIT ESTUCHE ADITAMENTO GUIA DE TIM			1	1		AP CHN,ARG,RUS,AFR AP CHN,ARG,RUS,AFR
2	65W–61351–00	.ROD, STEERING LINK .VARILLA ESLABON DIRECCION			1	1		
3	90201–10M20	.WASHER, PLATE .ARANDELA PLANA			2	2		
4	90185–09M01	.NUT, SELF-LOCKING .TUERCA AUTOBLOCANTE			2	2		
5	90170–09M03	.NUT .TUERCA			1	1		
6	90387–10M42	.COLLAR .ESPACIADOR			1	1		
7	90101–09M01	.BOLT .TORNILLO			1	1		
8	90201–10081	.WASHER, PLATE .ARANDELA PLANA			1	1		
9	6E5–43145–01	.CAP, CLAMP BRACKET .TAPA			1	1		
10	93210–16275	.O-RING .ANILLO O			1	1		

FIG. 28 REMOTE CONTROL BOX — CONTROL REMOTO COMPLETO

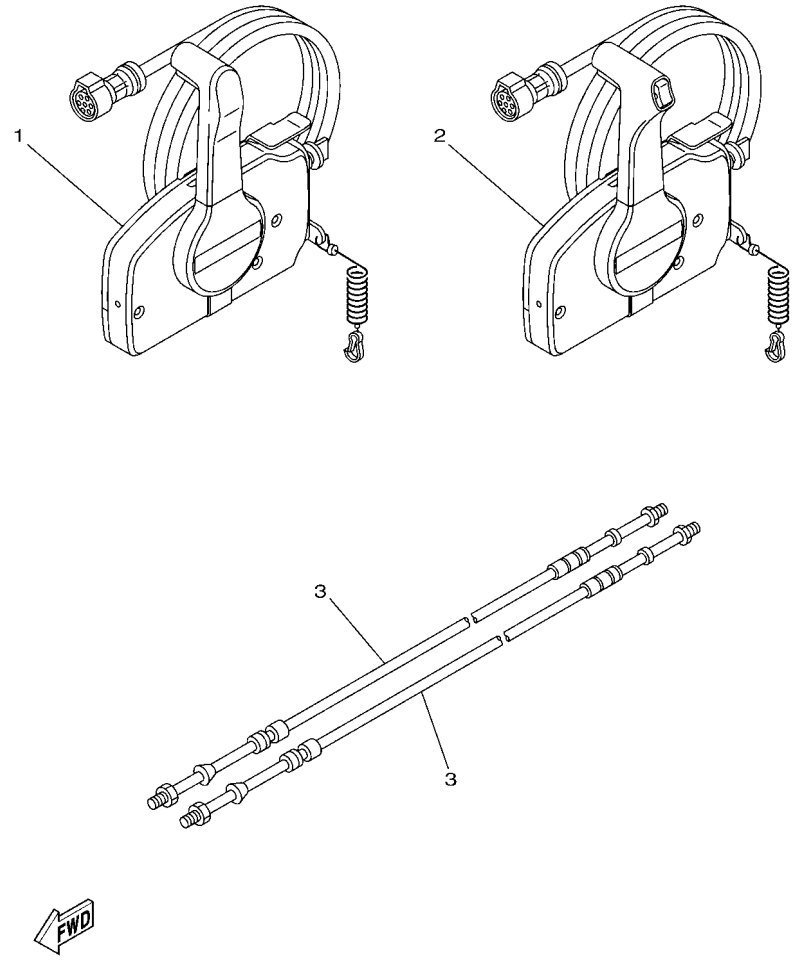

6FX1300-P340

REF. NO.	PART NO. CODIGO Nº	DESCRIPTION DESCRIPCION	MH	WH	W	WT		REMARKS OBSERVACIONES
1	703–48203–22	REMOTE CONTROL ASSY (7P) REMOTO CONTROL COMPL. (7P)			1			AP WITHOUT PT/T SW. AP WITHOUT PT/T SW.
2	703–48205–23	REMOTE CONTROL ASSY (10P, PTT) REMOTO CONTROL COMPL. (10P)				1		AP EXCEPT FOR AFR WITH PT/T SW. AP EXCEPT FOR AFR WITH PT/T SW.
3	701–48320–00	CABLE, REMOTE CONTROL L=12F CABLE CONTROL REMOTO L=12F			2	2		UR UR
	701–48320–20	CABLE, REMOTE CONTROL L=13F CABLE CONTROL REMOTO L=13F			2	2		UR UR
	701–48320–50	CABLE, REMOTE CONTROL L=15F CABLE CONTROL REMOTO L=15F			2	2		UR UR

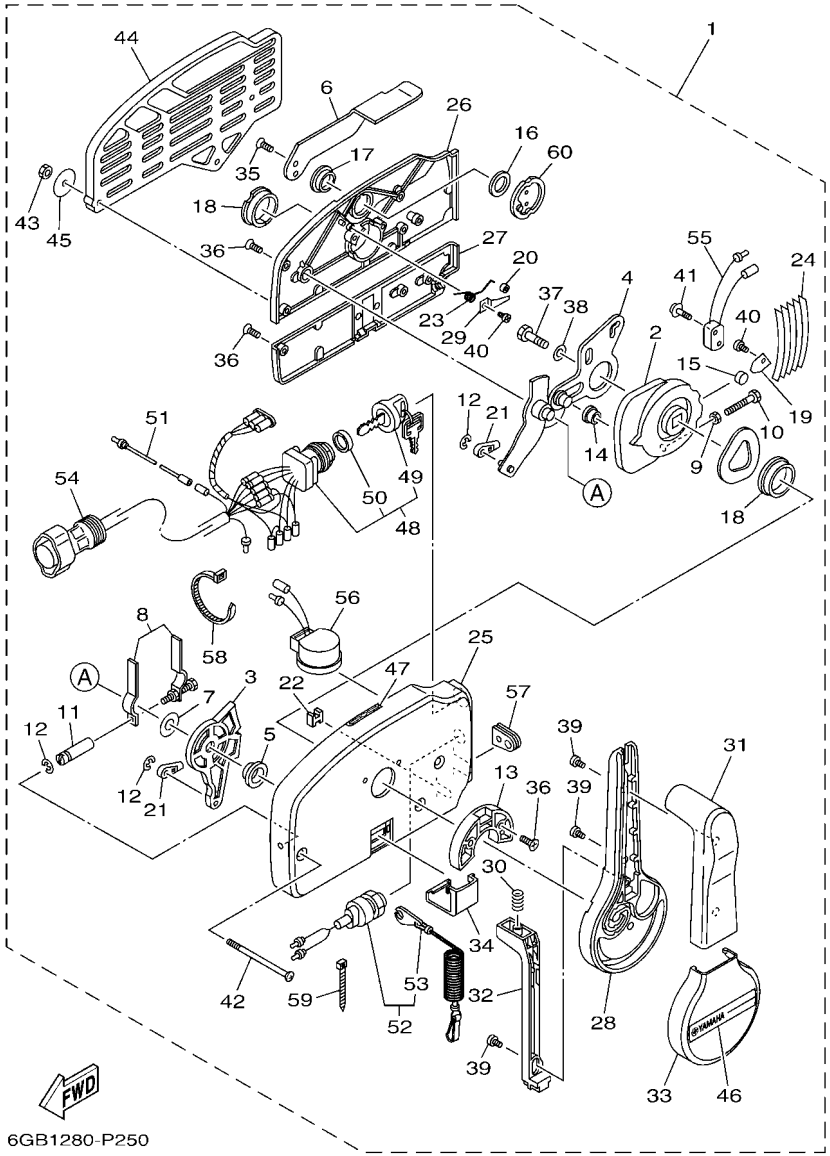

FIG. 29 REMOTE CONTROL ASSY 1 — CONTROL REMOTO COMPL 1

REF. NO.	PART NO. CODIGO Nº	DESCRIPTION DESCRIPCION	MH	WH	W	WT		REMARKS OBSERVACIONES
1	703–48203–22	REMOTE CONTROL ASSY (7P) REMOTO CONTROL COMPL. (7P)			1			AP WITHOUT PT/T SW. AP WITHOUT PT/T SW.
2	703–48232–00	.GEAR .ENGRANAJE 1			1			
3	703–48271–00	.ARM, SHIFT .BRAZO CAMBIADOR			1			
4	703–48261–01	.ARM, THROTTLE .BRAZO ACELERADOR			1			
5	703–48235–00	.BUSHING .BUJE			1			
6	703–48152–10	.KNOB, FREE ACCEL. .PERILLA			1			
7	703–48268–00	.SPACER .ESPACIADOR 3			1			
8	703–48264–00	.FRICTION, THROTTLE .FRICCION DE ACELERADOR			1			
9	95380–05600	.NUT .TUERCA			1			
10	97380–05025	.BOLT .TORNILLO HEXAGONAL			1			
11	703–48265–10	.SHAFT, FRICTION .EJE FRICCION			1			
12	93430–06024	.CIRCLIP .SEGURO			3			
13	703–48245–00	.PLATE, LOCK .PLACA CERRADURA			1			
14	703–48252–00	.ROLLER, CAM .RODILLO LEVA			1			
15	701–48248–00	.ROLLER, FREE ACCEL. .RODILLO ACELERADOR LIBRE			1			
16	703–48198–00	.WASHER, WAVE .RONDANA ONDULADA 3			1			
17	703–48243–00	.BUSHING .BUJE 3			1			
18	703–48236–00	.BUSHING 1 .BUJE			2			
19	703–48189–00	.RETAINER .RETENEDOR			1			
20	703–48234–00	.ROLLER, DETENT .RODILLO			1			
21	703–48345–01	.CABLE END, REMOTE CONTROL 2 .TERMINAL CABLE DE CONTROL REMO			2			
22	703–48358–01	.ANCHOR, CABLE .ABRAZADERA CABLE			1			
23	703–48244–00	.SPRING, FREE ACCEL. .RESORTE ACELERADOR LIBRE			1			
24	703–48238–00	.SPRING, DETENT .RESORTE			5			
25	703–48211–10	.HOUSING,1 .CAJA			1			
26	703–48212–10	.BACK PLATE 1 .PLACA TRASERA 1			1			
27	703–48213–10	.BACK PLATE 2 .PLACA TRASERA 2			1			

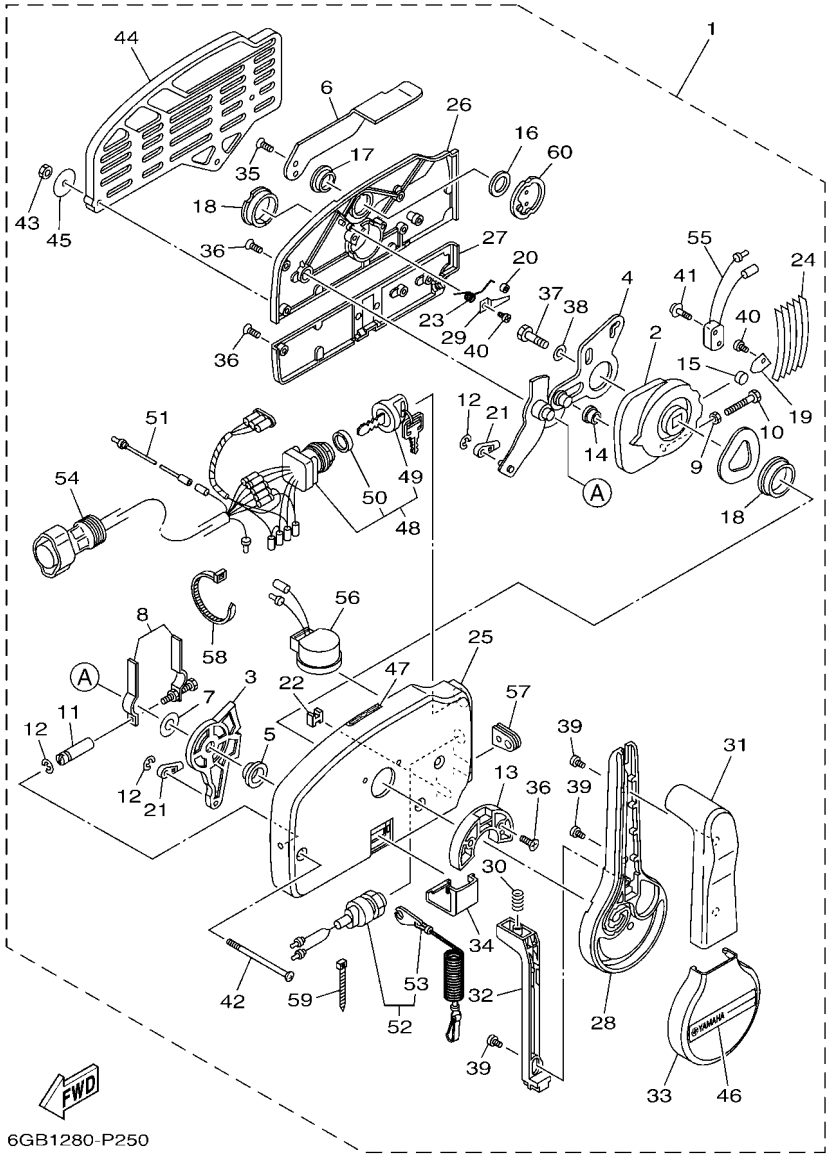

FIG. 29 REMOTE CONTROL ASSY 1 — CONTROL REMOTO COMPL 1

REF. NO.	PART NO. CODIGO Nº	DESCRIPTION DESCRIPCION	MH	WH	W	WT		REMARKS OBSERVACIONES
28	703–48221–10	.LEVER, CONTROL .PALANCA CONTROL			1			
29	703–48246–00	.SPACER .ESPACIADOR			1			
30	703–48227–00	.SPRING, NEUTRAL LOCK .RESORTE DE SEGURO			1			
31	703–48222–30	.GRIP, CONTROL LEVER .MANGO DE PALANCA CONTROL			1			SINGLE SINGLE
32	703–48223–10	.LOCK, NEUTRAL .CERRADURA NEUTRO			1			
33	703–48225–10	.COVER .CUBIERTA			1			
34	703–48219–10	.COVER, LEAD .CUBIERTA			1			
35	703–48281–00	.SCREW .TORNILLO 1			2			
36	703–44189–20	.SCREW .TORNILLO			7			
37	97380–08030	.BOLT .TORNILLO HEXAGONAL			1			
38	92990–08600	.WASHER, PLATE .ARANDELA PLANA			1			
39	703–48128–10	.SCREW 2 .TORNILLO 2			3			
40	98580–04006	.SCREW, PAN HEAD .TORNILLO DE CABEZA CRUZADA			2			
41	703–48129–00	.SCREW 3 .TORNILLO 3			2			
42	703–44189–30	.SCREW .TORNILLO			3			
43	95380–06600	.NUT, HEXAGON .TUERCA			3			
44	703–48293–10	.SPACER, REMOTE CONTROL .ESPACIADOR			1			SINGLE SINGLE
45	701–48287–00	.WASHER .ARANDELA			3			
46	703–48215–11	.GRAPHIC .CALCOMANIA 1			1			
47	6X3–44191–00	.INDICATOR, SHIFT .INDICADOR DE CAMBIOS			1			
48	703–82510–34	.MAIN SWITCH ASSY .CONJUNTO DE LLAVE IGNICION			1			
49	703–82577–00	..CAP, KEY ..TAPA			1			
50	6K1–82532–00	..CAP ..TAPA			1			
51	703–82531–00	.WIRE, LEAD (L70) .CABLE CONDUCTOR (L70)			1			
52	688–82575–02	.ENGINE STOP SWITCH ASSY .INTERRUPTOR DE PARADA COMPL			1			
53	682–82556–00	..LANYARD, STOP SWITCH ..CORDON DE INTERRUPTOR PARADA			1			
54	688–82586–21	.EXTENSION, WIRE HARNESS (4.9M) .EXTENSION, ARNES DE CABLES (4.			1			(7P) (7P)

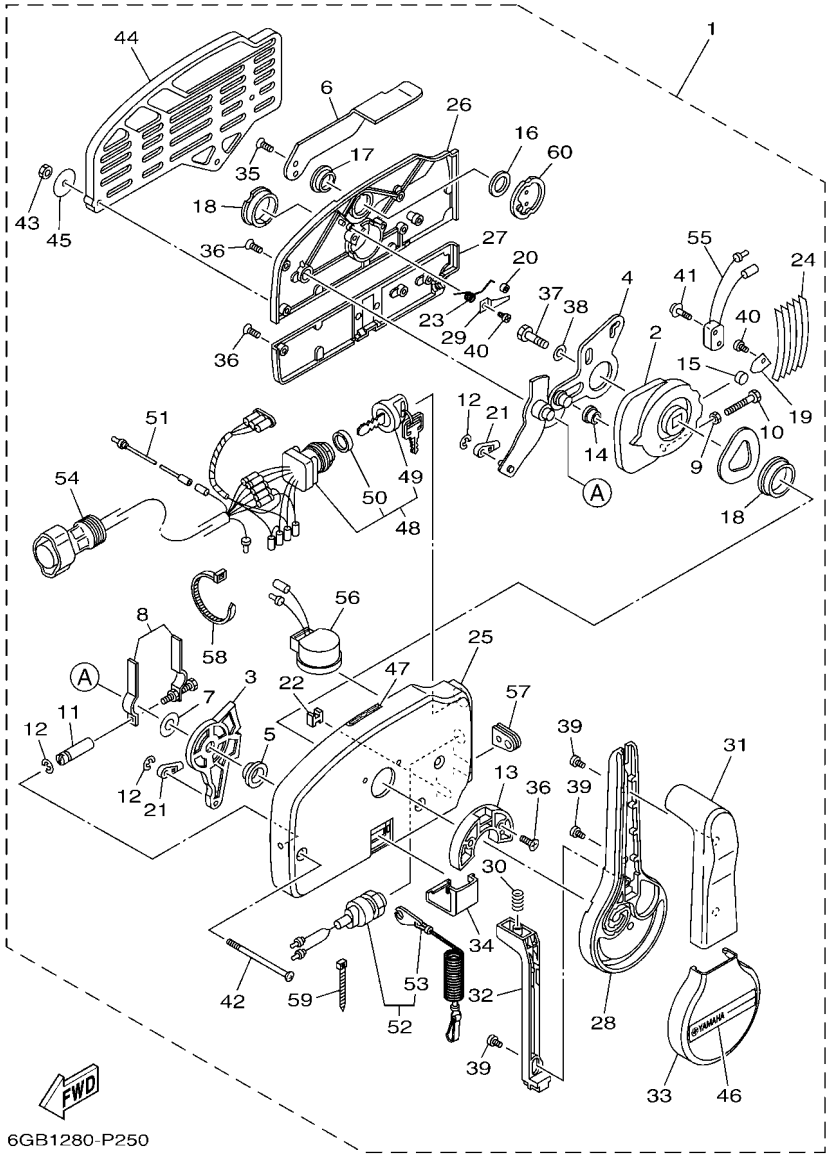

FIG. 29 REMOTE CONTROL ASSY 1 — CONTROL REMOTO COMPL 1

REF. NO.	PART NO. CODIGO Nº	DESCRIPTION DESCRIPCION	MH	WH	W	WT		REMARKS OBSERVACIONES
55	703–82540–00	.NEUTRAL SWITCH ASSY .INTERRUPTOR NEUTRAL COMPL			1			
56	703–83383–11	.BUZZER .ZUMBADOR			1			
57	703–48284–00	.GROMMET .TAPON			1			
58	703–82591–00	.BAND .BANDA			1			
59	703–82592–00	.BAND .BANDA			1			
60	703–48153–00	.SHAFT, FREE ACCEL. .EJE			1			

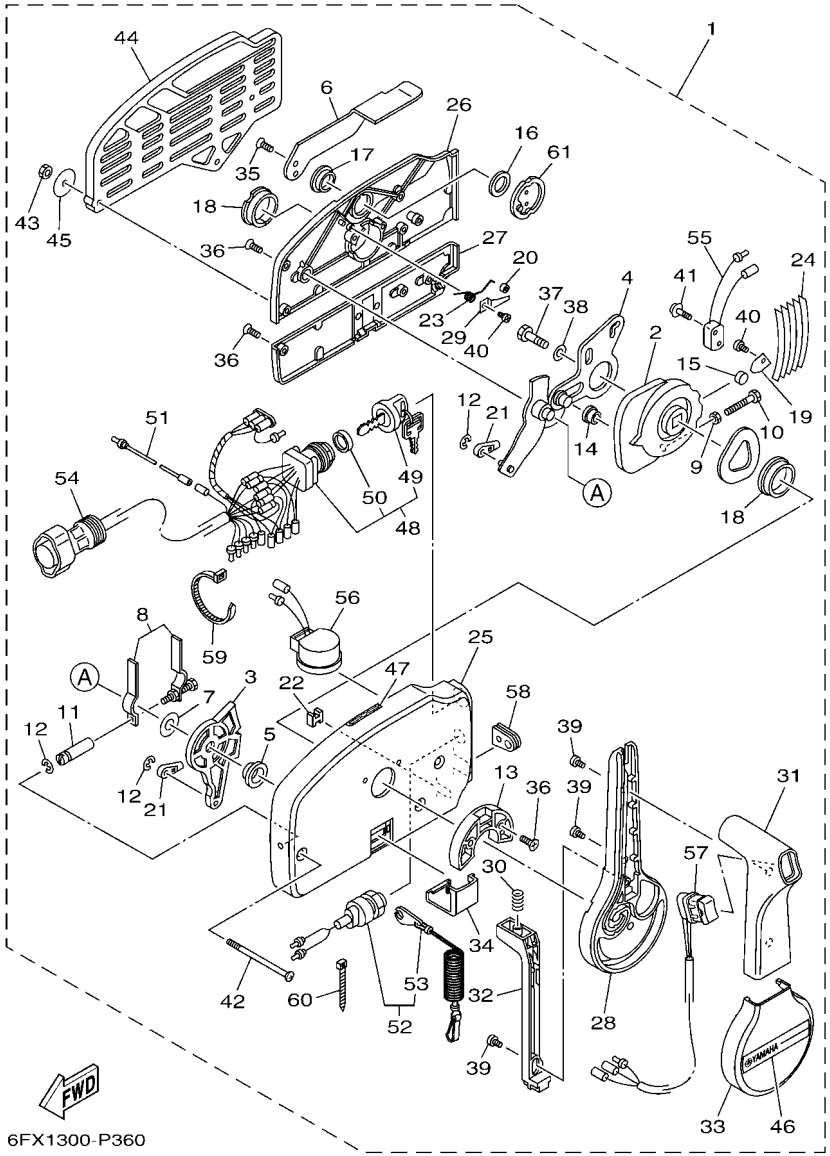

FIG. 30 REMOTE CONTROL ASSY 2 — CONTROL REMOTO COMPL 2

REF. NO.	PART NO. CODIGO Nº	DESCRIPTION DESCRIPCION	MH	WH	W	WT		REMARKS OBSERVACIONES
1	703–48205–23	REMOTE CONTROL ASSY (10P, PTT) REMOTO CONTROL COMPL. (10P)				1		AP EXCEPT FOR AFR WITH PT/T SW. AP EXCEPT FOR AFR WITH PT/T SW.
2	703–48232–00	.GEAR .ENGRANAJE 1				1		
3	703–48271–00	.ARM, SHIFT .BRAZO CAMBIADOR				1		
4	703–48261–01	.ARM, THROTTLE .BRAZO ACELERADOR				1		
5	703–48235–00	.BUSHING .BUJE				1		
6	703–48152–10	.KNOB, FREE ACCEL. .PERILLA				1		
7	703–48268–00	.SPACER .ESPACIADOR 3				1		
8	703–48264–00	.FRICTION, THROTTLE .FRICCION DE ACELERADOR				1		
9	95380–05600	.NUT .TUERCA				1		
10	97380–05025	.BOLT .TORNILLO HEXAGONAL				1		
11	703–48265–10	.SHAFT, FRICTION .EJE FRICCION				1		
12	93430–06024	.CIRCLIP .SEGURO				3		
13	703–48245–00	.PLATE, LOCK .PLACA CERRADURA				1		
14	703–48252–00	.ROLLER, CAM .RODILLO LEVA				1		
15	701–48248–00	.ROLLER, FREE ACCEL. .RODILLO ACELERADOR LIBRE				1		
16	703–48198–00	.WASHER, WAVE .RONDANA ONDULADA 3				1		
17	703–48243–00	.BUSHING .BUJE 3				1		
18	703–48236–00	.BUSHING 1 .BUJE				2		
19	703–48189–00	.RETAINER .RETENEDOR				1		
20	703–48234–00	.ROLLER, DETENT .RODILLO				1		
21	703–48345–01	.CABLE END, REMOTE CONTROL 2 .TERMINAL CABLE DE CONTROL REMO				2		
22	703–48358–01	.ANCHOR, CABLE .ABRAZADERA CABLE				1		
23	703–48244–00	.SPRING, FREE ACCEL. .RESORTE ACELERADOR LIBRE				1		
24	703–48238–00	.SPRING, DETENT .RESORTE				5		
25	703–48211–10	.HOUSING,1 .CAJA				1		
26	703–48212–10	.BACK PLATE 1 .PLACA TRASERA 1				1		
27	703–48213–10	.BACK PLATE 2 .PLACA TRASERA 2				1		

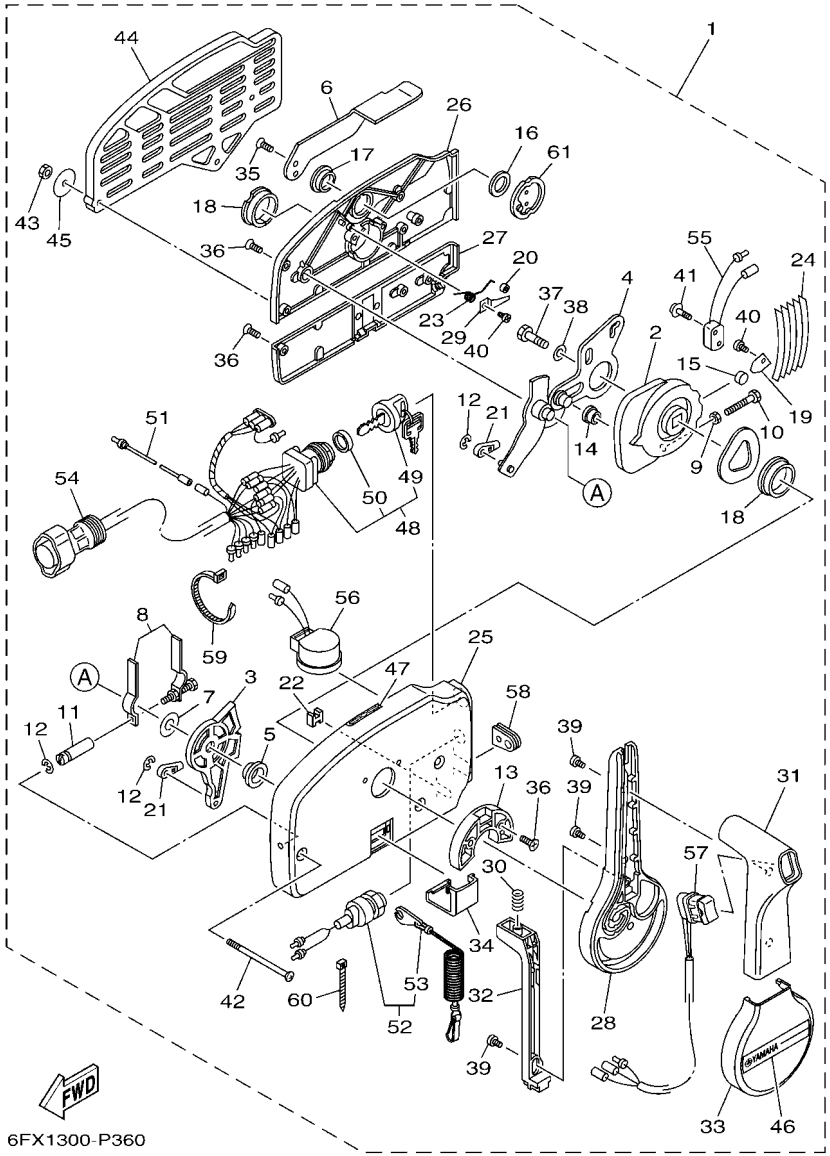

FIG. 30 REMOTE CONTROL ASSY 2 — CONTROL REMOTO COMPL 2

REF. NO.	PART NO. CODIGO Nº	DESCRIPTION DESCRIPCION	MH	WH	W	WT		REMARKS OBSERVACIONES
28	703–48221–10	.LEVER, CONTROL .PALANCA CONTROL				1		
29	703–48246–00	.SPACER .ESPACIADOR				1		
30	703–48227–00	.SPRING, NEUTRAL LOCK .RESORTE DE SEGURO				1		
31	703–48222–20	.GRIP, CONTROL LEVER .MANGO DE PALANCA CONTROL				1		SINGLE SINGLE
32	703–48223–10	.LOCK, NEUTRAL .CERRADURA NEUTRO				1		
33	703–48225–10	.COVER .CUBIERTA				1		
34	703–48219–10	.COVER, LEAD .CUBIERTA				1		
35	703–48281–00	.SCREW .TORNILLO 1				2		
36	703–44189–20	.SCREW .TORNILLO				7		
37	97380–08030	.BOLT .TORNILLO HEXAGONAL				1		
38	92990–08600	.WASHER, PLATE .ARANDELA PLANA				1		
39	703–48128–10	.SCREW 2 .TORNILLO 2				3		
40	98580–04006	.SCREW, PAN HEAD .TORNILLO DE CABEZA CRUZADA				2		
41	703–48129–00	.SCREW 3 .TORNILLO 3				2		
42	703–44189–30	.SCREW .TORNILLO				3		
43	95380–06600	.NUT, HEXAGON .TUERCA				3		
44	703–48293–10	.SPACER, REMOTE CONTROL .ESPACIADOR				1		SINGLE SINGLE
45	701–48287–00	.WASHER .ARANDELA				3		
46	703–48215–11	.GRAPHIC .CALCOMANIA 1				1		
47	6X3–44191–00	.INDICATOR, SHIFT .INDICADOR DE CAMBIOS				1		
48	703–82510–45	.MAIN SWITCH ASSY .CONJUNTO DE LLAVE IGNICION				1		
49	703–82577–00	..CAP, KEY ..TAPA				1		
50	6K1–82532–00	..CAP ..TAPA				1		
51	703–82531–00	.WIRE, LEAD (L70) .CABLE CONDUCTOR (L70)				1		
52	688–82575–02	.ENGINE STOP SWITCH ASSY .INTERRUPTOR DE PARADA COMPL				1		
53	682–82556–00	..LANYARD, STOP SWITCH ..CORDON DE INTERRUPTOR PARADA				1		
54	688–8258A–20	.EXTENSION, WIRE HARNESS (4.9M) .EXTENSION, ARNES DE CABLES (4.				1		(10P) (10P)

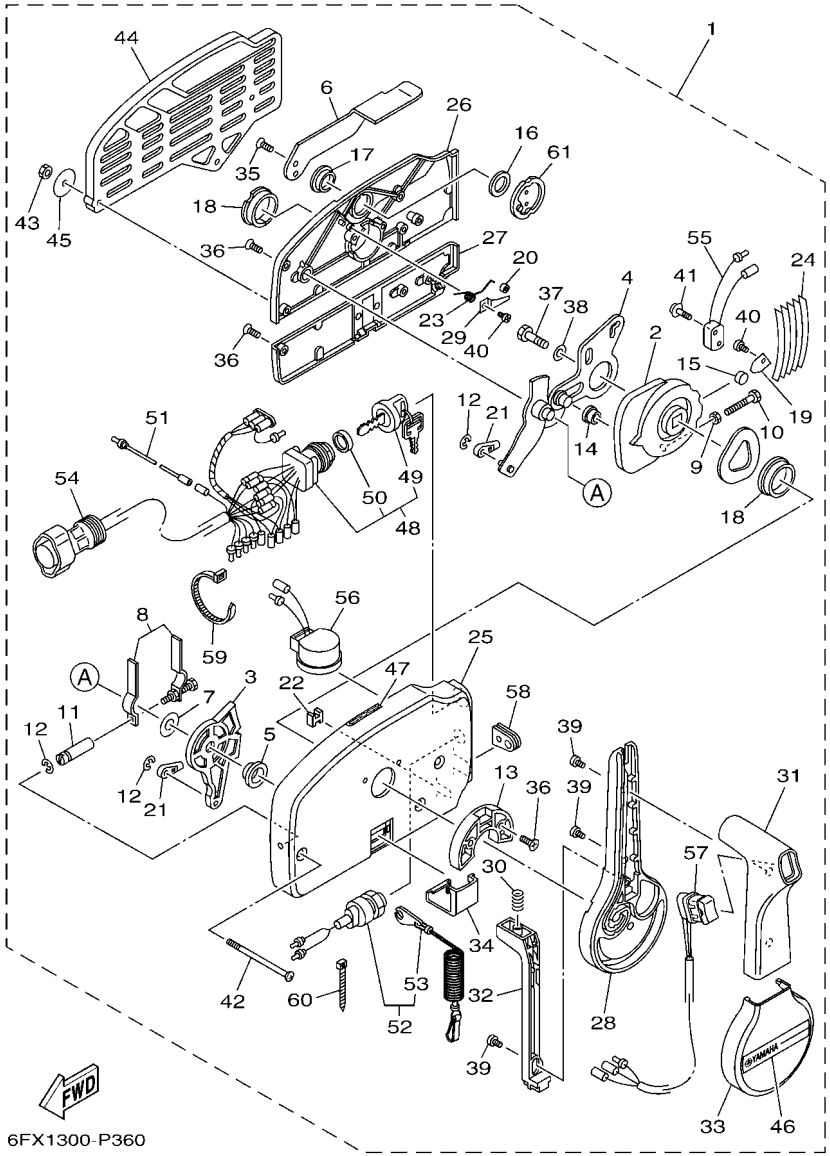

FIG. 30 REMOTE CONTROL ASSY 2 — CONTROL REMOTO COMPL 2

REF. NO.	PART NO. CODIGO Nº	DESCRIPTION DESCRIPCION	MH	WH	W	WT		REMARKS OBSERVACIONES
55	703–82540–00	.NEUTRAL SWITCH ASSY .INTERRUPTOR NEUTRAL COMPL				1		
56	703–83383–11	.BUZZER .ZUMBADOR				1		
57	703–82563–31	.TRIM & TILT SWITCH ASSY .INTERRUPTOR DE INCLINACION				1		
58	703–48284–00	.GROMMET .TAPON				1		
59	703–82591–00	.BAND .BANDA				1		
60	703–82592–00	.BAND .BANDA				1		
61	703–48153–00	.SHAFT, FREE ACCEL. .EJE				1		

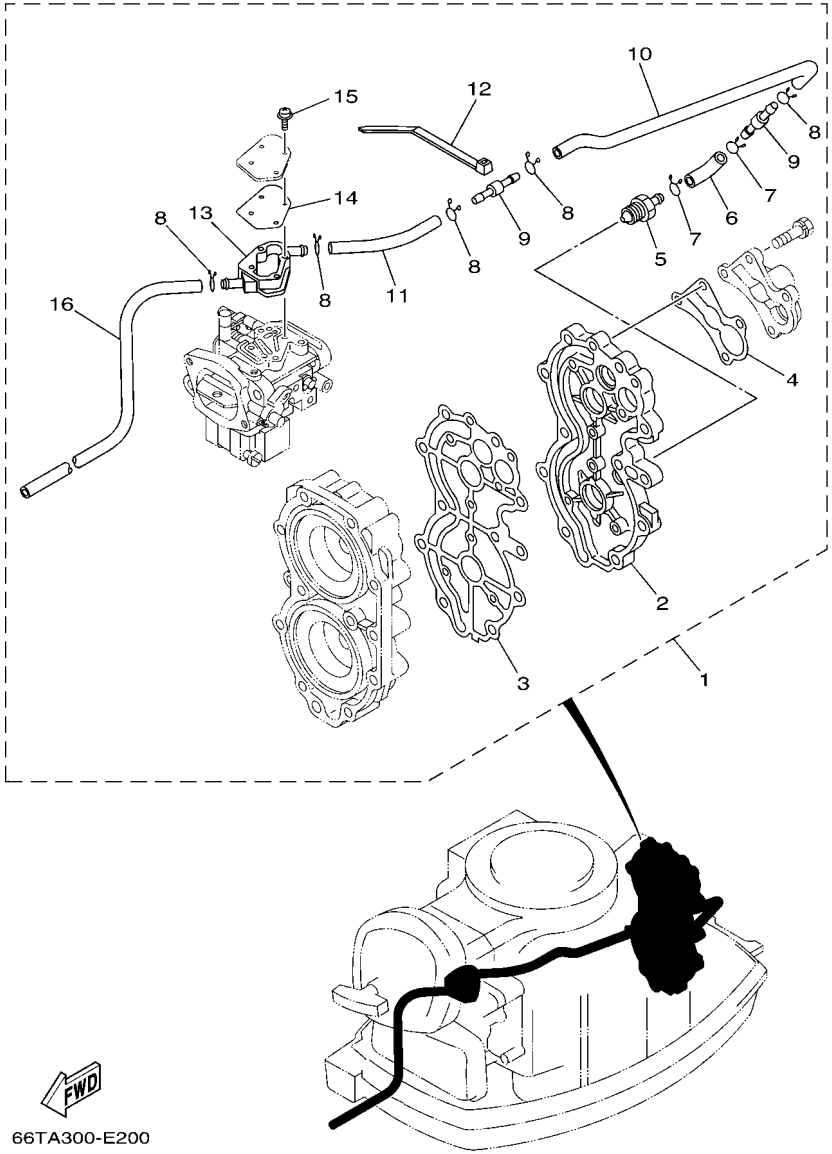

FIG. 31 OPTIONAL PARTS — PARTES OPCIONALES

REF. NO.	PART NO. CODIGO Nº	DESCRIPTION DESCRIPCION	MH	WH	W	WT		REMARKS OBSERVACIONES
1	66T–12440–51	HEAT EXCHANGER ASSY INTERCAMBIADOR DE CALOR COMPL	1	1	1	1		
2	66T–11191–50	.COVER, CYLINDER HEAD 1 .TAPA CULATA DE CILINDRO 1	1	1	1	1		
3	66T–11193–A3	.GASKET, HEAD COVER 1 .EMPAQUE	1	1	1	1		
4	676–12414–A1	.GASKET, COVER .EMPAQUE	1	1	1	1		
5	66T–12469–00	.JOINT 1 .CONDUCTO	1	1	1	1		
6	6E5–24315–00	.PIPE 5 .TUBO DE DESAGUE	1	1	1	1		
7	90467–11M08	.CLIP .PRESILLA	2	2	2	2		
8	90467–10M04	.CLIP .PRESILLA	5	5	5	5		
9	6E5–24379–00	.PIPE, JOINT 4 .TUBO DE UNION 4	2	2	2	2		
10	66T–12481–50	.PIPE 1 .TUBO 1	1	1	1	1		
11	66T–12482–50	.PIPE 2 .TUBO 2	1	1	1	1		
12	90465–13M36	.CLAMP .BRIDA	1	1	1	1		
13	66T–12466–00	.EXCHANGER, HEAT .CAMBIADOR DE CALOR	1	1	1	1		
14	66T–14536–00	.GASKET .EMPAQUE	1	1	1	1		
15	97980–04125	.SCREW, WITH WASHER .TORNILLO, CON ARANDELA	4	4	4	4		
16	90445–11M78	.HOSE (L1000) .TUBO (L1000)	1	1	1	1		

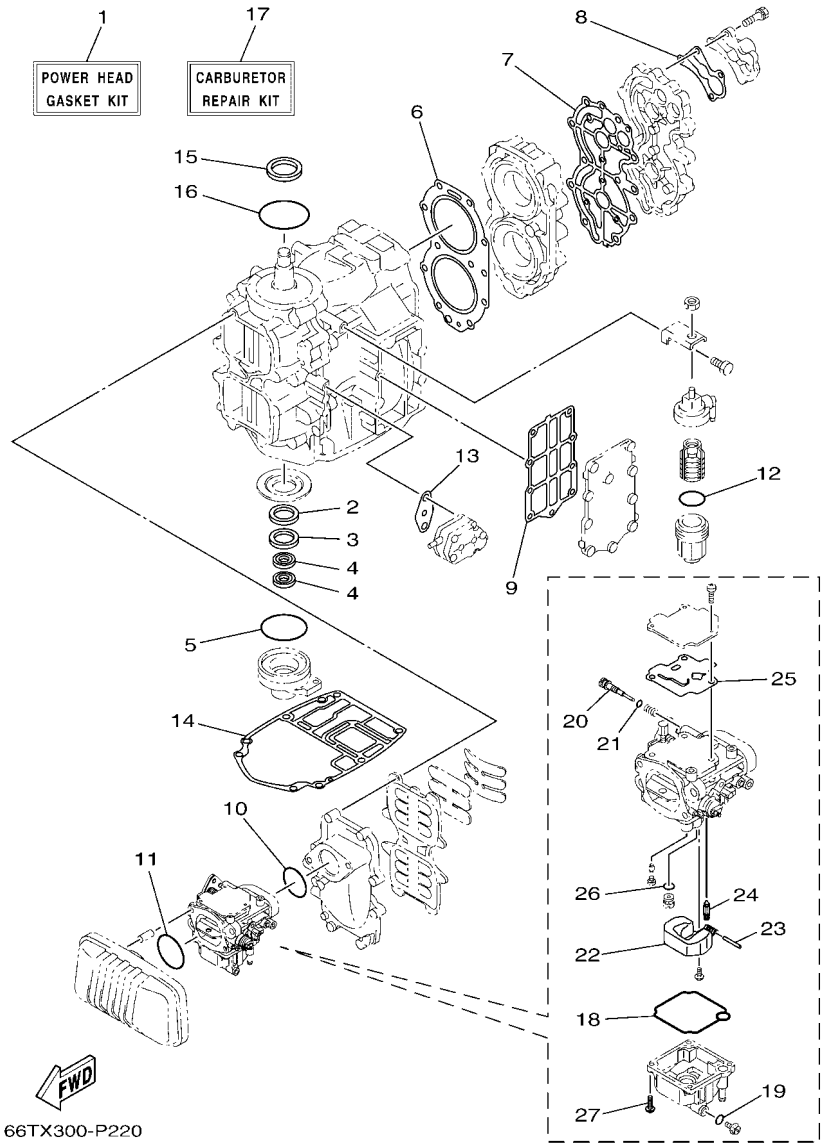

FIG. 32 REPAIR KIT 1 — ESTUCHE REPARATION 1

REF. NO.	PART NO. CODIGO Nº	DESCRIPTION DESCRIPCION	MH	WH	W	WT		REMARKS OBSERVACIONES
1	66T–W0001–02	POWER HEAD GASKET KIT JUEGO DE EMPAQUE MOTOR	1	1	1	1		
2	93102–30M56	.OIL SEAL .SELLO ACEITE	1	1	1	1		
3	93101–30M33	.OIL SEAL .SELLO ACEITE	1	1	1	1		
4	93101–16001	.OIL SEAL .SELLO ACEITE	2	2	2	2		
5	93210–65M50	.O-RING .ANILLO O	1	1	1	1		
6	66T–11181–A3	.GASKET, CYLINDER HEAD 1 .JUNTA, DE CULATA 1	1	1	1	1		
7	66T–11193–A3	.GASKET, HEAD COVER 1 .EMPAQUE	1	1	1	1		
8	676–12414–A1	.GASKET, COVER .EMPAQUE	1	1	1	1		
9	66T–41114–A0	.GASKET, EXHAUST OUTER COVER .EMPAQUE	1	1	1	1		
10	93210–46M16	.O-RING .ANILLO O	1	1	1	1		
11	93210–54M54	.O-RING .ANILLO O	1	1	1	1		
12	93210–32738	.O-RING .ANILLO O	1	1	1	1		
13	650–24431–A0	.GASKET, FUEL PUMP 1 .EMPAQUE BOMBA COMBUST 1	1	1	1	1		
14	66T–45113–A0	.GASKET, UPPER CASING .EMPAQUE	1	1	1	1		
15	93102–35008	.OIL SEAL .SELLO ACEITE	1	1	1	1		
16	93210–75M51	.O-RING .ANILLO O	1	1	1	1		
17	66T–W0093–10	CARBURETOR REPAIR KIT KIT REPARACION CARBURADOR	1	1	1	1		
18	66T–14984–60	.GASKET, FLOAT CHAMBER .EMPAQUE CAMARA DE BOIA	1	1	1	1		
19	652–14397–00	.O-RING .ANILLO O	1	1	1	1		
20	66T–14323–60	.SCREW, AIR ADJUSTING .TORNILLO DE AJUSTE DE AIRE	1	1	1	1		
21	652–14147–00	.O-RING .ANILLO O	1	1	1	1		
22	66T–14385–60	.FLOAT .BOIA	1	1	1	1		
23	6E5–14386–01	.PIN, FLOAT .PASADOR DE BOIA	1	1	1	1		
24	6C5–14546–10	.VALVE, NEEDLE .VALVULA DE AGUJA	1	1	1	1		
25	66T–14536–60	.GASKET .EMPAQUE	1	1	1	1		
26	62Y–14227–00	.O-RING .ANILLO O	1	1	1	1		
27	62Y–14321–00	.SCREW, THROTTLE .TORNILLO DE OBTURADOR	4	4	4	4		

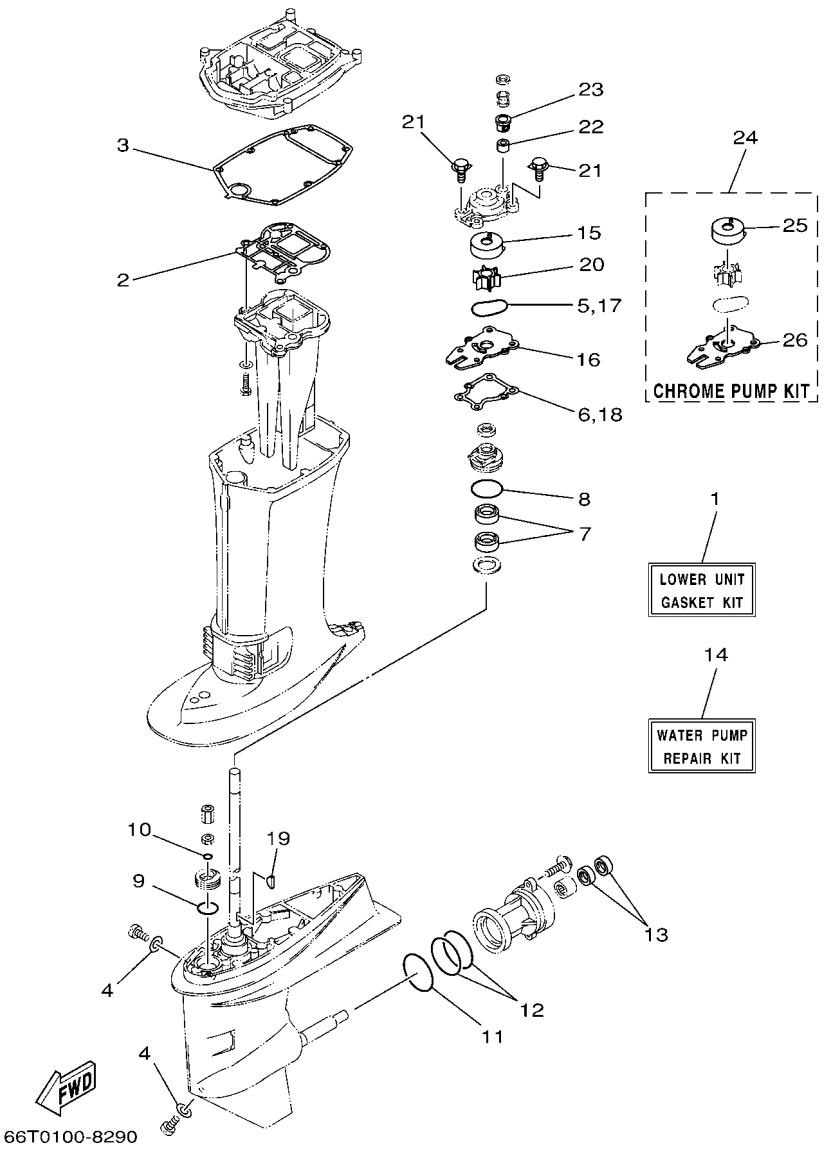

FIG. 33 REPAIR KIT 2 — ESTUCHE REPARATION 2

REF. NO.	PART NO. CODIGO Nº	DESCRIPTION DESCRIPCION	MH	WH	W	WT		REMARKS OBSERVACIONES
1	66T–W0001–21	LOWER UNIT GASKET KIT JUEGO DE EMPAQUE UNIDAD INFER	1	1	1	1		
2	66T–41133–A0	.GASKET, EXHAUST MANIFOLD 1 .EMPAQUE ESCAPE MULTIPLE	1	1	1	1		
3	66T–45114–A0	.GASKET, UPPER CASING .EMPAQUE	1	1	1	1		
4	90430–08003	.GASKET .JUNTA	2	2	2	2		
5	93210–59MG7	.O-RING .ANILLO O	1	1	1	1		
6	63D–44316–00	.GASKET, WATER PUMP .EMPAQUE	1	1	1	1		
7	93101–22M60	.OIL SEAL .SELLO ACEITE	2	2	2	2		
8	93210–48001	.O-RING .ANILLO O	1	1	1	1		
9	93210–33MG4	.O-RING .ANILLO O	1	1	1	1		
10	93210–06ME6	.O-RING .ANILLO O	1	1	1	1		
11	93210–69MG6	.O-RING .ANILLO O	1	1	1	1		
12	93210–74MG5	.O-RING .ANILLO O	2	2	2	2		
13	93101–22M00	.OIL SEAL .SELLO ACEITE	2	2	2	2		
14	66T–W0078–00	WATER PUMP REPAIR KIT ESTUCHE REPARACION BOMBA AGUA	1	1	1	1		
15	63D–44322–00	.INSERT, CARTRIDGE .CARTUCHO	1	1	1	1		
16	66T–44323–00	.OUTER PLATE, CARTRIDGE .PLACA EXTERIOR DEL CARTUCHO	1	1	1	1		
17	93210–59MG7	.O-RING .ANILLO O	1	1	1	1		
18	63D–44316–00	.GASKET, WATER PUMP .EMPAQUE	1	1	1	1		
19	90280–03M03	.KEY, WOODRUFF .CUNA WOODRUFF	1	1	1	1		
20	6H4–44352–02	.IMPELLER .IMPULSOR	1	1	1	1		
21	90119–08185	.BOLT, WITH WASHER .TORNILLO CON ARANDELA	4	4	4	4		
22	663–44366–00	.DAMPER, WATER SEAL 2 .GOMA DEL SELLO DE AGUA 2	1	1	1	1		
23	63D–44312–00	.COVER, WATER PUMP HOUSING .CUBIERTA CAJA BOMBA DE AGUA	1	1	1	1		
24	66T–W0078–0A	CHROME PUMP KIT ESTUCHE REPARACION BOMBA AGUA	1	1	1	1		
25	63D–44322–40	.INSERT, CARTRIDGE .CARTUCHO	1	1	1	1		
26	66T–44323–40	.OUTER PLATE, CARTRIDGE .PLACA EXTERIOR DEL CARTUCHO	1	1	1	1		

FIG. 34 REPAIR KIT 3 — ESTUCHE REPARATION 3

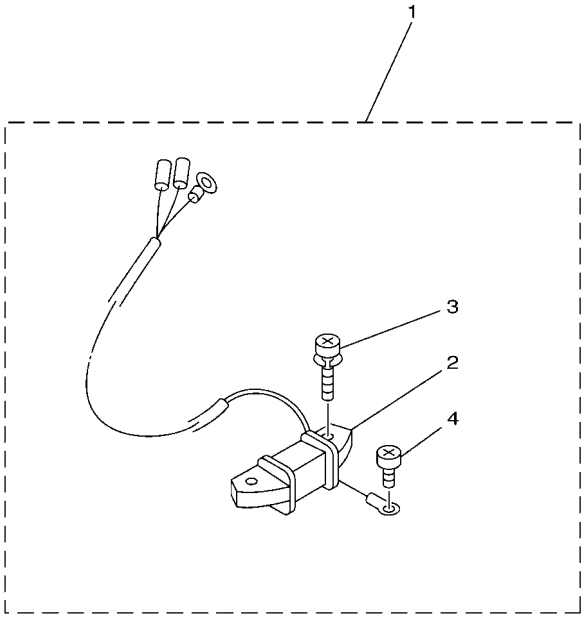

66T0010-9270

REF. NO.	PART NO. CODIGO Nº	DESCRIPTION DESCRIPCION	MH	WH	W	WT		REMARKS OBSERVACIONES
1	66T–81303–00	LIGHTING COIL ASSY BOBINA DE ILUMINACION COMPL.	1	1	1	1		AP AP
2	66T–85533–00	.COIL, LIGHTING .BOBINA DE LUZ	1	1	1	1		
3	97902–06125	.SCREW, WITH WASHER .TORNILLO, CON ARANDELA	2	2	2	2		
4	97802–04006	.SCREW, PAN HEAD .TORNILLO	1	1	1	1		

NUMERICAL INDEX
INDICE NUMERICO

PART NO. CODIGO Nº	REF. NO.
66T–11111–01–1S	3 – 21
66T–11119–00	3 – 19
66T–11181–A3	3 – 22
	32 – 6
66T–11191–00–1S	3 – 24
66T–11191–50	31 – 2
66T–11193–A3	3 – 25
	31 – 3
	32 – 7
676–11325–00	1 – 2
	3 – 17
676–11372–00	3 – 33
650–11372–01	5 – 5
66T–11400–01	4 – 1
66T–11412–00	4 – 2
66T–11422–00	4 – 3
66T–11432–00	4 – 4
66T–11442–00	4 – 5
6F5–11515–00	4 – 9
66T–11565–00	3 – 14
66T–11603–00	4 – 16
66T–11604–00	4 – 16
66T–11605–00	4 – 16
66T–11631–01–93	4 – 15
6F5–11633–00	4 – 17
663–11634–00	4 – 18
66T–11635–01	4 – 15
66T–11636–01	4 – 15
6F5–11651–00	4 – 10
66T–11681–00	4 – 11
6E5–12411–02	1 – 3
	3 – 27
6E5–12412–00	3 – 28
676–12413–00–1S	3 – 29
676–12414–A1	1 – 4
	3 – 30
	31 – 4
	32 – 8
66T–12440–51	31 – 1
66T–12466–00	31 – 13
66T–12469–00	31 – 5
66T–12481–50	31 – 10
66T–12482–50	31 – 11
6E5–13552–01	3 – 3
	3 – 4
	5 – 4
66T–13610–00	5 – 1
66T–13641–03–1S	5 – 3

PART NO. CODIGO Nº	REF. NO.
652–14147–00	6 – 12
	32 – 21
69W–14212–00	6 – 3
62Y–14227–00	6 – 21
	32 – 26
66T–14301–60	6 – 1
66T–14301–70	6 – 1
62Y–14321–00	6 – 24
	32 – 27
66T–14323–60	6 – 10
	32 – 20
66M–14325–00	6 – 14
6A0–14325–00	7 – 24
62Y–14334–00	6 – 11
6DR–14342–35	6 – 22
66M–14355–00	6 – 23
62Y–14383–30	6 – 8
66T–14385–60	6 – 13
	32 – 22
6E5–14386–01	6 – 15
	32 – 23
652–14397–00	6 – 9
	32 – 19
66T–14440–10	5 – 12
624–14485–00	3 – 5
66T–14497–10	17 – 10
66T–14523–60	6 – 2
66T–14527–60	6 – 17
66T–14536–00	31 – 14
66T–14536–60	6 – 18
	32 – 25
6C5–14546–10	6 – 16
	32 – 24
6C5–14567–00	6 – 19
6L2–14578–01	6 – 26
6L2–14584–00	6 – 25
62Y–14597–00	6 – 5
66T–1492E–83	6 – 20
66T–14981–60	6 – 6
66T–14984–60	6 – 7
	32 – 18
66T–15100–03	3 – 2
66T–15396–01–CA	3 – 8
66T–15705–00	8 – 7
66T–15710–01	8 – 1
66T–15711–01	8 – 2
66T–15713–00	8 – 5
66T–15714–00	8 – 3

PART NO. CODIGO Nº	REF. NO.
66T–15716–00	8 – 6
66T–15723–00	8 – 28
66T–15731–00	8 – 16
66T–15734–00	8 – 14
63V–15741–00	8 – 4
63V–15744–00	8 – 10
6F5–15752–00	8 – 18
6F5–15753–00	8 – 19
689–15755–01	8 – 21
66T–15758–01	8 – 24
66T–15762–01	8 – 27
66T–15767–00	8 – 8
63V–15768–00	8 – 11
6F5–15768–00	8 – 20
66T–15770–00	8 – 15
66T–15771–00	8 – 34
66T–15772–00	8 – 36
6F5–15779–02	8 – 22
66T–15784–00	8 – 9
697–15789–00	8 – 23
6F5–15791–00	8 – 17
66T–15794–00	8 – 13
15A–22442–00	22 – 28
6YJ–24167–00	26 – 7
6YJ–24201–20	26 – 1
6YJ–24201–30	26 – 1
6YJ–24260–10	26 – 3
6Y1–24260–30	26 – 3
6Y1–24268–00	26 – 6
6G1–24304–10	7 – 1
6G1–24305–05	26 – 13
6Y1–24305–06	26 – 15
61J–24306–04	26 – 8
6E5–24315–00	31 – 6
66T–24329–00	14 – 22
6Y1–24329–00	26 – 5
650–24351–51	26 – 12
61J–24360–00	26 – 10
6E5–24379–00	31 – 9
692–24410–00	7 – 14
663–24411–00	7 – 19
692–24411–00	7 – 16
6A0–24412–02	7 – 25
6A0–24413–00	7 – 15
6A0–24421–01	7 – 23
650–24431–A0	7 – 26
	32 – 13
648–24434–01	7 – 17

PART NO. CODIGO Nº	REF. NO.
648–24435–02	7 – 20
61N–24521–00	7 – 7
61N–24560–00	7 – 5
61N–24563–00	1 – 6
	7 – 6
648–24566–02	7 – 9
6YJ–24610–01	26 – 2
66T–26301–00	15 – 28
65W–26326–00	14 – 19
65W–26326–10	14 – 19
	18 – 10
66T–41113–00–1S	3 – 32
66T–41114–A0	3 – 34
	32 – 9
66T–41131–00–CA	23 – 4
66T–41131–10–CA	23 – 4
66T–41133–A0	23 – 5
	33 – 2
66T–41137–A0–CA	23 – 1
66T–41237–00	17 – 5
66T–41252–00	5 – 21
66T–41256–00	5 – 19
66T–41257–00	5 – 23
661–41262–02	5 – 20
6H4–41271–02	5 – 16
66T–41273–00	15 – 40
689–41273–00	5 – 17
6J8–41274–00	5 – 18
66T–41611–00	9 – 11
66T–41631–12	17 – 4
66T–41638–10	17 – 1
6F5–41662–00	17 – 17
65W–42101–01–8D	15 – 14
664–42119–00	15 – 22
65W–42121–01–8D	15 – 39
66T–42123–00	15 – 7
65W–42125–00	15 – 19
6G1–42126–00	15 – 18
65W–42131–01	15 – 36
6G1–42137–20	15 – 23
65W–42138–00	15 – 16
65W–42159–00	15 – 17
66T–42167–00	17 – 2
6G1–42177–00	15 – 21
65W–42508–00	16 – 1
65W–42511–01–8D	21 – 6
65W–42511–11–8D	21 – 6
65W–42527–00	16 – 3

PART NO. CODIGO Nº	REF. NO.
648–42528–00	21 – 1
65W–42528–00	16 – 10
65W–42561–00	16 – 7
65W–42562–00	16 – 6
66T–42610–00	2 – 1
66T–42610–30	2 – 1
66T–42613–01	2 – 3
66T–42615–02	2 – 9
66T–4261A–00	2 – 2
6E0–42651–02	2 – 5
6F5–42652–01	2 – 7
61N–42675–40	2 – 12
688–42675–50	2 – 12
61N–42676–40	2 – 13
688–42676–50	2 – 13
63D–42678–40	2 – 10
	2 – 11
63D–42681–40	2 – 14
	2 – 15
66T–42710–01–8D	14 – 1
66T–42716–00	14 – 5
66T–42725–00	14 – 8
6G1–42725–00	10 – 20
66T–42725–10	14 – 8
66T–42725–20	14 – 8
66T–42725–30	18 – 9
65W–42726–00	14 – 23
6H4–42726–00	14 – 21
65W–42726–10	14 – 23
	18 – 11
6H1–42726–10	14 – 21
676–42727–00	14 – 20
66T–42738–00–CA	14 – 6
66T–42741–00	14 – 26
6EE–42794–40	14 – 31
66T–42815–01–8D	14 – 9
66T–42816–00	14 – 13
66T–43111–01–8D	19 – 1
65W–43111–10–8D	20 – 1
66T–43112–01–8D	19 – 6
65W–43112–10–8D	20 – 2
6J8–43113–01	19 – 23
648–43114–01	19 – 4
	19 – 9
663–43118–01–8D	19 – 3
	19 – 8
63D–43131–01	19 – 20
	20 – 9

PART NO. CODIGO Nº	REF. NO.
66T–43144–00	14 – 14
6E5–43145–01	27 – 9
65W–43191–00	19 – 12
	20 – 4
65W–43192–00	19 – 11
	20 – 3
65W–43311–01–8D	19 – 18
65W–43311–11–8D	19 – 18
	20 – 7
682–43318–01	19 – 35
66T–43350–11	19 – 44
65W–43373–00	21 – 2
65W–43613–00	19 – 51
65W–43614–01	19 – 49
65W–43615–01	19 – 50
65W–43616–00	19 – 48
66T–43627–00	19 – 25
65W–43630–02	19 – 36
65W–43630–11	19 – 36
66T–43631–01	19 – 46
66T–43631–11	19 – 46
689–43633–00	16 – 8
65W–43800–23–8D	22 – 1
65W–43801–01	22 – 17
67F–43802–00	22 – 40
67C–43804–10	22 – 4
67C–43805–11	22 – 3
6T4–43808–00	22 – 45
67C–4380F–10	22 – 7
65W–4380K–00	22 – 15
65W–4380L–04	22 – 37
65W–43810–01	22 – 16
65W–43811–01	22 – 20
65W–43812–00	22 – 18
65W–43817–00	22 – 52
65W–4381B–00	22 – 31
69J–4381C–00	22 – 34
6H1–43829–00	22 – 73
65W–4382A–00	22 – 60
65W–43830–00	22 – 49
65W–43831–00	22 – 48
65W–43840–01	22 – 14
62X–43841–00	22 – 46
65W–43843–00	22 – 67
65W–43844–00	22 – 61
6H1–43844–10	22 – 69
6H1–43845–00	22 – 56
6H1–43847–00	22 – 58

NUMERICAL INDEX
INDICE NUMERICO

PART NO. CODIGO Nº	REF. NO.
6H1–4384F–10	22 – 70
65W–43851–00	22 – 62
65W–43853–00	22 – 72
6T4–43853–00	22 – 43
65W–43854–00	22 – 59
65W–43855–00	22 – 65
6H1–43856–10	22 – 68
65W–43857–00	22 – 27
65W–4385A–01	22 – 25
6H1–43861–10	22 – 32
6H1–43862–00	22 – 30
67C–43862–10	22 – 13
6D8–43863–00	22 – 57
65W–43865–00	22 – 19
6H1–43866–01	22 – 41
67C–43867–00	22 – 21
65W–4386A–00	22 – 26
	22 – 36
67C–4386K–10	22 – 8
6H1–43875–00	22 – 55
62X–43878–01	22 – 74
67C–43879–10	22 – 9
65W–43880–21	22 – 2
65W–43881–22	22 – 11
67C–43882–10	22 – 12
67C–43892–10	22 – 5
66T–44111–02	15 – 2
682–44116–01	17 – 19
66T–44121–01	17 – 14
66M–44122–00	17 – 15
66T–44124–00	15 – 10
66T–44125–01	17 – 25
	18 – 6
66T–44143–00	17 – 21
66T–44143–10	17 – 21
61N–44146–00	24 – 27
66T–44150–01	24 – 26
66T–44150–11	24 – 26
66T–44150–21	24 – 26
65W–44173–01	17 – 23
703–44189–20	29 – 36
	30 – 36
703–44189–30	29 – 42
	30 – 42
6X3–44191–00	15 – 13
	29 – 47
	30 – 47
688–44194–00	17 – 9

PART NO. CODIGO Nº	REF. NO.
66T–44311–00	24 – 12
63D–44312–00	25 – 15
	33 – 23
63D–44316–00	24 – 16
	33 – 6
	33 – 18
63D–44322–00	24 – 13
	33 – 15
63D–44322–40	24 – 13
	33 – 25
66T–44323–00	24 – 14
	33 – 16
66T–44323–40	24 – 14
	33 – 26
6BG–44341–00	24 – 19
6H4–44352–02	24 – 18
	33 – 20
66T–44361–00	25 – 1
66T–44361–10	25 – 1
66T–44361–20	25 – 1
66T–44362–20	25 – 22
66T–44362–30	25 – 22
663–44366–00	25 – 14
	33 – 22
663–44367–00	25 – 4
6E5–44391–00	14 – 18
66T–44514–00	21 – 15
66T–44514–30	21 – 15
66T–44526–00	21 – 16
66T–44526–30	21 – 16
65W–44551–00–8D	21 – 18
65W–44555–10	21 – 19
66T–44575–00	21 – 20
66T–45111–00–8D	23 – 7
66T–45111–10–8D	23 – 7
66T–45113–A0	23 – 12
	32 – 14
66T–45114–A0	23 – 11
	33 – 3
63D–45155–00	23 – 8
66T–45211–00–8D	23 – 17
63D–45214–00	24 – 7
63D–45215–00	24 – 8
65W–45251–00	1 – 8
	20 – 18
676–45251–00	1 – 1
	3 – 15
67C–45251–00	1 – 11

PART NO. CODIGO Nº	REF. NO.
67C–45251–00	25 – 12
66T–45300–03–8D	24 – 1
66T–45300–13–8D	24 – 1
66T–45300–32–8D	24 – 1
66T–45311–01–8D	24 – 2
679–45318–00	23 – 15
66T–45321–00	24 – 29
688–45341–10	24 – 6
66T–45344–01	24 – 21
63D–45361–02–8D	24 – 44
664–45371–01	1 – 10
	25 – 8
63D–45375–00	25 – 7
663–45376–00	25 – 6
66T–45501–01	24 – 33
66T–45501–11	24 – 33
66T–45501–21	24 – 33
6H4–45536–00	24 – 3
66T–45551–00	24 – 36
66T–45560–01	24 – 38
663–45567–01	24 – 40
663–45567–10	24 – 40
663–45567–20	24 – 40
663–45567–30	24 – 40
663–45567–40	24 – 40
663–45567–50	24 – 40
663–45567–60	24 – 40
66T–45571–00	24 – 41
63D–45577–00	24 – 43
63D–45577–10	24 – 43
63D–45577–20	24 – 43
63D–45577–30	24 – 43
63D–45577–40	24 – 43
63D–45577–50	24 – 43
63D–45577–60	24 – 43
663–45587–01	24 – 35
663–45587–10	24 – 35
663–45587–20	24 – 35
663–45587–30	24 – 35
663–45587–40	24 – 35
663–45587–50	24 – 35
663–45587–60	24 – 35
66T–45611–00	24 – 56
66T–45631–00	24 – 51
663–45633–00	24 – 54
66T–45635–00	24 – 55
663–45930–00	25 – 21
63D–45941–00	25 – 21

PART NO. CODIGO Nº	REF. NO.
663–45941–01	25 – 21
69W–45943–00	25 – 21
69W–45945–00	25 – 21
69W–45947–00	25 – 21
663–45949–01	25 – 21
69W–45952–00	25 – 21
663–45952–02	25 – 21
663–45954–01	25 – 21
663–45956–01	25 – 21
69W–45958–00	25 – 21
663–45958–01	25 – 21
663–45970–60	25 – 21
663–45972–60	25 – 21
663–45974–60	25 – 21
663–45976–00	25 – 21
663–45978–00	25 – 21
663–45987–02	25 – 16
66T–45997–00	25 – 17
703–48128–10	29 – 39
	30 – 39
703–48129–00	29 – 41
	30 – 41
703–48152–10	29 – 6
	30 – 6
703–48153–00	29 – 60
	30 – 61
703–48189–00	29 – 19
	30 – 19
703–48198–00	29 – 16
	30 – 16
703–48203–22	28 – 1
	29 – 1
703–48205–23	28 – 2
	30 – 1
703–48211–10	29 – 25
	30 – 25
703–48212–10	29 – 26
	30 – 26
703–48213–10	29 – 27
	30 – 27
703–48215–11	29 – 46
	30 – 46
703–48219–10	29 – 34
	30 – 34
703–48221–10	29 – 28
	30 – 28
703–48222–20	30 – 31
703–48222–30	29 – 31

PART NO. CODIGO Nº	REF. NO.
703–48223–10	29 – 32
	30 – 32
703–48225–10	29 – 33
	30 – 33
703–48227–00	29 – 30
	30 – 30
703–48232–00	29 – 2
	30 – 2
703–48234–00	29 – 20
	30 – 20
703–48235–00	29 – 5
	30 – 5
703–48236–00	29 – 18
	30 – 18
703–48238–00	29 – 24
	30 – 24
703–48243–00	29 – 17
	30 – 17
703–48244–00	29 – 23
	30 – 23
703–48245–00	29 – 13
	30 – 13
703–48246–00	29 – 29
	30 – 29
701–48248–00	29 – 15
	30 – 15
703–48252–00	29 – 14
	30 – 14
703–48261–01	29 – 4
	30 – 4
703–48264–00	29 – 8
	30 – 8
703–48265–10	29 – 11
	30 – 11
703–48268–00	29 – 7
	30 – 7
703–48271–00	29 – 3
	30 – 3
703–48281–00	29 – 35
	30 – 35
703–48284–00	29 – 57
	30 – 58
701–48287–00	29 – 45
	30 – 45
703–48293–10	29 – 44
	30 – 44
701–48320–00	28 – 3
701–48320–20	28 – 3

PART NO. CODIGO Nº	REF. NO.
701–48320–50	28 – 3
6FM–48344–00	17 – 27
	18 – 2
703–48345–01	29 – 21
	30 – 21
703–48358–01	29 – 22
	30 – 22
66T–48501–01	18 – 1
65W–48511–01	18 – 7
	21 – 27
6H3–48538–00	17 – 29
	18 – 4
65W–61350–00	27 – 1
65W–61351–00	27 – 2
66T–81303–00	34 – 1
66T–81328–00	9 – 13
66T–81800–04	13 – 1
66T–81820–00	13 – 5
66T–81826–00	13 – 7
66T–81830–00	13 – 4
66T–81840–00	13 – 6
66T–81850–01	13 – 3
66T–81857–11	13 – 2
689–81870–00	10 – 21
66T–81916–01	10 – 8
6L2–81945–00	11 – 5
66T–81948–00	12 – 12
6G1–8194A–10	11 – 1
6G1–81952–00	11 – 4
6E5–8195B–01	12 – 3
6E5–8195C–01	12 – 6
6G1–81970–63	11 – 8
6EE–81994–40	8 – 39
6EE–81995–40	8 – 40
6AG–81996–00	8 – 41
66T–82105–01	11 – 7
66T–82115–01	11 – 16
6E5–82116–01	12 – 11
6E5–82117–01	11 – 6
6G5–82119–00	12 – 10
66T–82127–00	21 – 26
6U0–82127–00	20 – 21
66T–82127–10	21 – 24
6H1–82148–00	20 – 20
6G1–82151–01	11 – 9
	11 – 14
	12 – 2
67C–82181–10	22 – 6

NUMERICAL INDEX
INDICE NUMERICO

PART NO. CODIGO Nº	REF. NO.
6A0–82317–00	10 – 2
66T–82370–00	10 – 15
6E3–82370–21	10 – 15
703–82510–34	29 – 48
703–82510–45	30 – 48
66T–82519–00	10 – 18
703–82531–00	29 – 51
	30 – 51
6K1–82532–00	29 – 50
	30 – 50
703–82540–00	29 – 55
	30 – 55
6F5–82540–01	11 – 27
6GK–82550–00	10 – 19
66T–82553–00	11 – 28
66T–82554–00	11 – 29
682–82556–00	15 – 42
	29 – 53
	30 – 53
688–82560–10	10 – 17
703–82563–31	30 – 57
66T–82575–01	15 – 41
688–82575–02	29 – 52
	30 – 52
703–82577–00	29 – 49
	30 – 49
689–8257Y–00	15 – 43
688–82586–21	29 – 54
688–8258A–20	30 – 54
66T–82590–01	11 – 13
6GK–82590–01	11 – 13
6GK–82590–11	12 – 1
66T–82590–21	12 – 1
703–82591–00	29 – 58
	30 – 59
703–82592–00	29 – 59
	30 – 60
65W–82594–00	11 – 33
703–83383–11	29 – 56
	30 – 56
66T–83557–00	11 – 15
6N7–83557–00	11 – 15
	11 – 15
66T–85515–00	9 – 8
66T–85520–00	9 – 10
66T–85533–00	9 – 14
	34 – 2
66T–85540–02	10 – 5

PART NO. CODIGO Nº	REF. NO.
66T–8554B–01–94	10 – 1
66T–85550–00	9 – 1
66T–85550–10	9 – 1
66T–85560–01	9 – 2
66T–85560–11	9 – 2
66T–85561–00	9 – 3
66T–85570–00	10 – 10
66T–85580–00	9 – 5
66T–85582–00	9 – 7
66T–85596–00	9 – 6
6J4–86111–00	11 – 17
66T–86112–00	11 – 19
6J4–86116–00	11 – 18
682–86117–00	11 – 22
66T–87149–00	12 – 9
66T–W0001–02	32 – 1
66T–W0001–21	33 – 1
66T–W0004–00	5 – 2
66T–W0078–00	1 – 12
	33 – 14
66T–W0078–0A	33 – 24
66T–W0084–04–8D	15 – 1
66T–W0090–03–1S	3 – 1
66T–W0093–10	32 – 17
656–W2810–02	7 – 30
90101–06020	20 – 19
90101–08002	3 – 20
90101–08M28	19 – 57
90101–08M76	19 – 15
90101–08M86	21 – 14
90101–09M01	27 – 7
90101–10047	19 – 60
90101–12063	20 – 31
90105–08M61	24 – 50
90105–08M76	21 – 3
90109–05M89	16 – 14
90109–06M80	10 – 7
	11 – 12
	14 – 28
	14 – 30
	17 – 20
90109–06M81	10 – 6
	10 – 9
	10 – 13
	14 – 7
	17 – 18
90109–06M86	11 – 30
	11 – 32

PART NO. CODIGO Nº	REF. NO.
90109–06M86	14 – 15
	15 – 15
90109–06M88	16 – 4
90109–08M90	19 – 29
90110–10M02	20 – 28
90116–10063	21 – 5
90116–10M23	23 – 19
90119–06273	14 – 17
90119–06290	10 – 4
90119–06291	14 – 2
90119–06311	11 – 26
90119–06MA3	3 – 26
	3 – 35
90119–06MA5	3 – 31
90119–08156	25 – 5
90119–08183	23 – 2
90119–08185	24 – 25
	33 – 21
90119–08203	23 – 14
90119–08M03	5 – 11
90119–08M10	8 – 30
90119–08M39	13 – 8
90119–08M51	8 – 31
90119–08M52	13 – 9
90119–08MA5	3 – 23
90119–10005	3 – 7
90119–10073	21 – 22
90149–14M12	19 – 2
	19 – 7
90152–05010	24 – 9
90152–05011	15 – 24
90152–06M01	3 – 18
90157–05014	19 – 47
90157–05M19	26 – 4
90161–06M00	11 – 34
90167–05017	2 – 4
90170–06M30	11 – 2
	12 – 4
	12 – 7
90170–09M03	27 – 5
90170–12138	24 – 37
90170–20137	9 – 20
90171–16011	25 – 19
90179–10M33	21 – 23
90185–08018	21 – 12
90185–08057	19 – 31
	19 – 59
90185–09M01	27 – 4

PART NO. CODIGO Nº	REF. NO.
90185–10027	21 – 4
90185–10M13	20 – 30
90185–10M14	16 – 12
90185–22043	19 – 24
	20 – 12
90201–08M00	20 – 24
90201–08M07	19 – 30
90201–08M54	17 – 11
90201–10038	22 – 29
90201–10049	21 – 28
90201–10081	27 – 8
90201–10120	18 – 8
90201–10M02	15 – 25
90201–10M20	27 – 3
90201–12062	20 – 32
90201–12426	19 – 62
	20 – 33
90201–12M07	15 – 5
90201–20417	4 – 20
90201–21M18	9 – 21
90201–22429	24 – 42
90201–22M03	19 – 22
	20 – 11
90201–27M00	24 – 23
90201–43M00	15 – 32
90202–10M56	16 – 9
90202–12031	19 – 27
90202–12060	25 – 2
90202–43M57	15 – 34
90204–06M00	11 – 3
	12 – 5
	12 – 8
90206–12052	14 – 12
	15 – 6
90206–12M00	19 – 28
90206–43M22	15 – 33
90209–10M26	16 – 11
90209–27012	4 – 12
90209–52M00	21 – 7
90243–04007	19 – 5
	19 – 10
90249–07M32	19 – 52
90249–07M33	19 – 54
90249–10M31	19 – 40
90249–12M34	19 – 32
	19 – 32
	19 – 33
90249–12M38	20 – 15

PART NO. CODIGO Nº	REF. NO.
90249–18M35	20 – 27
90250–06023	24 – 53
90254–03M05	17 – 16
	17 – 24
	17 – 26
	18 – 5
90266–04M01	2 – 8
90266–04M04	2 – 6
90280–03M03	24 – 17
	33 – 19
90280–05015	9 – 19
90338–05M03	14 – 25
90338–07M00	14 – 24
90340–08002	24 – 4
90381–12M11	20 – 13
90385–12M04	8 – 32
90386–07MA2	19 – 38
90386–08032	15 – 27
90386–10M99	19 – 37
90386–12M37	14 – 10
90386–12M98	19 – 26
	20 – 14
90386–12MA2	14 – 11
90386–14MA1	20 – 6
90386–18M44	20 – 25
90386–18MA0	20 – 26
90386–22M15	19 – 21
	20 – 10
90386–40M99	15 – 35
90386–40MA0	15 – 31
90386–44M03	21 – 9
90386–44M99	21 – 11
90386–52M02	21 – 8
90387–05054	16 – 13
90387–06119	10 – 3
90387–06289	11 – 24
90387–06M41	14 – 4
90387–06M66	8 – 26
90387–06M80	5 – 15
90387–06M86	15 – 3
90387–07048	19 – 42
90387–07049	19 – 41
90387–07M29	19 – 53
90387–08M05	8 – 33
90387–08M16	17 – 3
90387–10108	19 – 14
90387–10M42	27 – 6
90389–22M01	25 – 18

PART NO. CODIGO Nº	REF. NO.
90430–08003	1 – 9
	24 – 5
	33 – 4
90430–12072	25 – 3
90445–07M08	3 – 37
90445–07M24	5 – 7
90445–07MA4	5 – 8
90445–09086	7 – 12
	7 – 28
90445–09M08	7 – 3
90445–09M75	3 – 36
90445–11M05	26 – 11
90445–11M06	26 – 9
90445–11M78	31 – 16
90446–03MA3	10 – 12
90446–10M86	15 – 30
90446–10M87	15 – 29
90462–20007	11 – 31
90464–09M49	14 – 29
90464–12M00	9 – 25
90464–13249	8 – 38
90465–11M10	12 – 14
90465–13M11	20 – 17
90465–13M36	31 – 12
90465–15M74	9 – 22
90465–25M57	14 – 24
90467–06016	5 – 9
90467–08004	7 – 4
	7 – 13
	7 – 29
90467–10M04	31 – 8
90467–11M08	31 – 7
90468–18008	15 – 12
	17 – 28
	18 – 3
90480–09M21	14 – 3
90480–10155	11 – 20
90480–10M23	11 – 23
90480–10M71	9 – 24
90480–25161	10 – 11
90480–25M70	25 – 23
90480–30M71	25 – 24
90501–10M84	17 – 6
90501–15M01	24 – 52
90501–23215	15 – 26
90502–10M06	19 – 58
90506–16M34	14 – 16
90506–20M37	19 – 45

NUMERICAL INDEX
INDICE NUMERICO

PART NO. CODIGO Nº	REF. NO.
90506–30M00	19 – 55
91318–04025	22 – 51
91380–06020	22 – 38
91490–16012	17 – 22
91490–20010	15 – 20
91490–20012	19 – 56
91490–30025	25 – 20
91609–16012	22 – 22
91690–30018	19 – 13
	20 – 5
91690–40032	5 – 22
92012–10040	22 – 23
92990–05100	7 – 22
92990–06100	16 – 5
92990–06200	15 – 11
92990–06600	24 – 32
92990–08100	19 – 17
92990–08600	29 – 38
	30 – 38
92990–10100	23 – 21
92990–10600	23 – 22
92995–06200	15 – 9
92995–08200	21 – 13
92995–10600	19 – 61
	20 – 29
93101–16001	3 – 11
	32 – 4
93101–22M00	24 – 49
	33 – 13
93101–22M60	24 – 20
	33 – 7
93101–30M33	3 – 10
	32 – 3
93102–30M56	3 – 9
	32 – 2
93102–35008	9 – 4
	32 – 15
93210–03261	11 – 25
93210–03478	22 – 64
93210–04N50	22 – 53
93210–04N51	22 – 54
93210–064A5	22 – 35
93210–06ME6	24 – 31
	33 – 10
93210–08006	22 – 63
93210–08287	26 – 14
	26 – 16
93210–09165	22 – 47

PART NO. CODIGO Nº	REF. NO.
93210–10M74	22 – 44
93210–11073	22 – 66
93210–11368	22 – 33
93210–12N52	22 – 42
93210–16275	27 – 10
93210–32738	1 – 7
	7 – 8
	32 – 12
93210–33MG4	24 – 30
	33 – 9
93210–43MJ0	21 – 10
93210–46M16	5 – 10
	32 – 10
93210–48001	24 – 22
	33 – 8
93210–50768	22 – 39
93210–54M54	5 – 13
	32 – 11
93210–59MG7	24 – 15
	33 – 5
	33 – 17
93210–65M50	3 – 12
	32 – 5
93210–69MG6	24 – 46
	33 – 11
93210–74MG5	24 – 47
	33 – 12
93210–75M51	9 – 17
	32 – 16
93306–001U1	24 – 45
93306–306V5	4 – 8
93306–307U0	4 – 6
93310–727U0	4 – 13
93315–32224	24 – 11
93317–22204	24 – 48
93332–00001	24 – 34
93332–00003	24 – 39
93332–000UE	4 – 7
93420–30042	23 – 16
93430–06024	29 – 12
	30 – 12
93440–68M03	4 – 14
93501–08001	22 – 71
93505–32038	22 – 24
	22 – 50
93603–21111	4 – 19
93604–08062	24 – 24
93606–12019	23 – 3

PART NO. CODIGO Nº	REF. NO.
93606–12019	23 – 13
	23 – 18
	25 – 10
93608–12063	3 – 6
93700–06M03	16 – 2
	19 – 19
	19 – 19
	20 – 8
94702–00040	1 – 5
	3 – 38
94702–00272	1 – 5
	3 – 38
95380–03600	7 – 18
95380–05600	11 – 11
	24 – 10
	29 – 9
	30 – 9
95380–06600	29 – 43
	30 – 43
95380–06700	17 – 8
	24 – 28
95380–08600	7 – 10
	19 – 16
95380–10600	19 – 63
	23 – 20
95380–10700	15 – 37
95380–12600	20 – 34
95780–06300	15 – 8
95780–10300	15 – 38
97013–06014	7 – 11
97080–08016	20 – 23
97380–05025	29 – 10
	30 – 10
97380–08030	29 – 37
	30 – 37
97513–06530	8 – 35
	8 – 37
97513–06535	5 – 6
97602–04316	22 – 10
97802–04006	9 – 16
	9 – 16
	34 – 4
97880–05008	11 – 21
97880–06035	17 – 7
97885–06008	21 – 25
97890–05006	6 – 4
97902–04108	9 – 9
97902–06125	9 – 15

PART NO. CODIGO Nº	REF. NO.
97902–06125	9 – 15
	34 – 3
97980–04125	31 – 15
97980–05230	11 – 10
97985–06240	5 – 14
97D95–06014	17 – 13
97D95–08045	17 – 12
97E75–08530	21 – 17
	23 – 6
	23 – 10
97E75–08545	23 – 9
97E75–08565	25 – 5
97E75–10570	21 – 21
97E75–10640	25 – 11
97E95–06510	8 – 29
97E95–06512	10 – 16
97E95–06514	20 – 22
97E95–06516	3 – 16
	9 – 23
	12 – 13
	14 – 27
97E95–06520	3 – 13
97E95–06525	10 – 14
97E95–06530	7 – 2
97E95–06535	8 – 25
97E95–06540	7 – 27
	9 – 18
97E95–06550	15 – 4
97E95–08516	13 – 10
97E95–08525	25 – 9
97E95–08535	25 – 13
98503–05028	7 – 21
98580–04006	29 – 40
	30 – 40
99080–08600	19 – 39
	19 – 43
99080–10600	19 – 34
	20 – 16
9E471–04305	9 – 12

PART NO. CODIGO Nº	REF. NO.

PART NO. CODIGO Nº	REF. NO.