YAMAHA

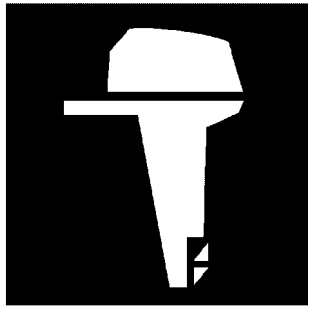

PARTS CATALOGUE
CATALOGO DE REPUESTOS

E25B’18 (69PK)
E30H’18 (60BK)
25B’18 (69RK)
30H’18 (69SK)

YAMAHA
GENUINE
Parts & Accessories

1S69R-200SA

( )

E25B/E30H
25B/30H
PARTS CATALOGUE
©2018 by Yamaha Motor Co., Ltd.
1st edition, July 2018
All rights reserved.
Any reprinting or unauthorized use
without the written permission of
Yamaha Motor Co., Ltd.
is expressly prohibited.
Printed in Japan.

E25B/E30H
25B/30H
CATALOGO DE REPUESTOS
©2018 por Yamaha Motor Co., Ltd.
1ª edición, julio 2018
Todos los derechos reservados.
Toda reproducción o uso no autorizado
sin el consentimiento escrito de
Yamaha Motor Co., Ltd.
quedan expresamente prohibidos
Impreso en Japón.

FOREWORD

This Parts Catalogue is related to the parts for the model(s) on the cover page. When you are ordering replacement parts, please refer to this Parts Catalogue and quote both part numbers and part names correctly.

1. Modifications or additions which have been made after the issue of the Parts Catalogue will be announced in the Parts News.
   It is advisable that you make the necessary corrections to the Parts Catalogue according to the Parts News.

2. Abbreviations
   The following abbreviations are used in this Parts Catalogue.
   "UR" Use specified parts number.
   "UN" Use as many as needed.
   "AP" Alternate Parts
   "LM" Locally Made (Parts need to be ordered locally)
   "F#" Frame No. (Applicable machine No.)
   "O/S" Over Size

3. The number of components for assembly
   - Parts, which are to be supplied in an assembly, are listed with a dot (.) in front of the part name as shown below.
   - The numeral appearing to the right of each component part indicates the quantity of parts for each assembly unit.

PART NO.	DESCRIPTION	Q'TY	REMARKS
2F5–83310–60	FRONT FLASHER LIGHT ASSY	2	
115–83311–60	.BULB (6V–18W)	1	

4. Applicable colours of graphics are represented in the "REMARKS" as shown below.

PART NO.	DESCRIPTION	Q'TY	REMARKS
2N4–24110–00–X5	FUEL TANK COMP.	2	MXR
3J1–24240–10	.GRAPHIC, FUEL TANK	1	FOR MXR

5. Note that the illustrations for reference in finding parts numbers are not to be used for assembling. When assembling, please use the applicable service manual.

6. The asterisk (*) before a reference number indicates modified items after the first edition.

7. Applicable Serial No.
   Engine Serial No.

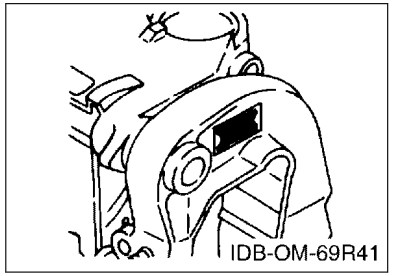

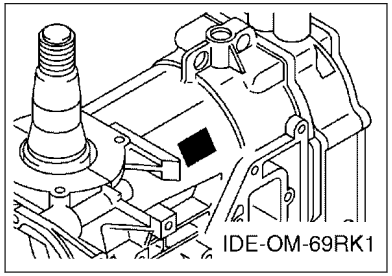

8. Applicable Engine Starting Serial No.

Model	Serial No.	Model	Serial No.
E25B	61RK-1075871	25B	61RK-1075871
E30H	61TK-1107484	30H	61TK-1107484

9. Applicable Colour Code

Abbreviation	Colour Name	Colour Code
DBN1	DARK BLUISH GRAY 1	008D

10. Quantity Column Information

Column No.	Name Of Q'ty Column	Applicable Model
1	MH	E25BMH,E30HMH,25BMH,30HMH
2	WH	30HWH
3	W	25BW,30HW
4	WC	25BWC,30HWC

PROLOGO

Este catálogo de repuestos corresponde a las piezas para el o los modelos que figuran en la página de portada. Al formular el pedido de repuestos, se ruega citar este catálogo y especificar correctamente el número y el nombre de las piezas.

1. Las modificaciones y agregados que se hayan realizado después de la edición de este Catálogo de Repuestos, serán anunciados en las Informaciones de Recambios.
   Es recomendable que se hagan las correcciones necesarias en el Catálogo de Repuestos de acuerdo con las Informaciones de Recambios.

2. Abreviaciones
   En este. Catálogo de Repuestos se emplean las siguientes abreviaciones.
   "UR" Usar el número de partes especificado
   "UN" Usar la cantidad necesaria
   "AP" Piezas sustitutivas
   "LM" Fabricación local (Hay que pedir los repuestos en las cercanías)
   "F#" Nº de bastidor (Nº aplicable a la máquina)
   "O/S" Sobredimensionado

3. La cantidad de componentes para el montaje
   - Los componentes, suministrados como conjunto, se describen con un punto (.) que precede al nombre del parte como se indica a continuación.
   - La numeración que aparece a la derecha de cada descripción indica la cantidad de partes por cada unidad de conjunto.

CODIGO Nº	DESCRIPCION	CANT.	OBSERVACIONES
2F5–83310–60	ENSAMBLAJE DE LA LUZ	2	
115–83311–60	.BOMBILLA (6V–18W)	1	

4. Los colores de los componentes se indican como sigue en la columna de "OBSERVACIONES".

CODIGO Nº	DESCRIPCION	CANT.	OBSERVACIONES
2N4–24110–00–X5	COMP. DEL TANQUE	2	MXR
3J1–24240–10	.GRAFICO, DEL TANQUE	1	PARA MXR

5. Debe tenerse en cuenta que las ilustraciones sirven como guia para la búsqueda de los números de partes y no deben usarse para el montaje. Durante el montaje, se recomienda usar el manual de taller correspondiente.

6. EL asterisco (*) antes del número de referencia indica los elementos modificados después de la primera edición.

7. Números de serie
   Nº de Serie del motor

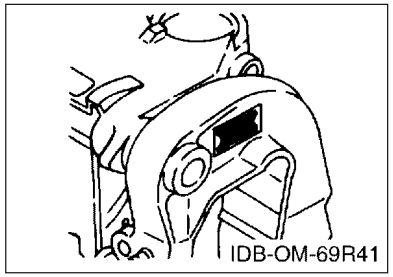

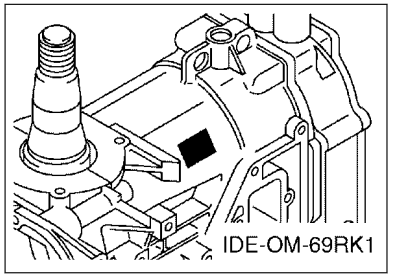

8. Números de serie del motor

Modelo	Nº de serie	Modelo	Nº de serie
E25B	61RK-1075871	25B	61RK-1075871
E30H	61TK-1107484	30H	61TK-1107484

9. Códigos de color aplicables

Abreviatura	Nombre de color	Código de color
DBN1	DARK BLUISH GRAY 1	008D

10. Informacion para la columna de cantidades

Columna Nº	Nombre de la columna de cantidades	Modelo aplicable
1	MH	E25BMH,E30HMH,25BMH,30HMH
2	WH	30HWH
3	W	25BW,30HW
4	WC	25BWC,30HWC

CONTENTS

SCHEDULED SERVICE PARTS.....1
TOP COWLING.....2
CYLINDER & CRANKCASE.....3
CRANKSHAFT & PISTON.....5
INTAKE.....6
CARBURETOR.....7
FUEL.....8
STARTER.....10
GENERATOR.....12
ELECTRICAL 1.....13
ELECTRICAL 2.....14
ELECTRICAL 3.....15
ELECTRICAL 4.....17
STARTING MOTOR.....19
BOTTOM COWLING.....20
STEERING.....21
CONTROL 1.....22
CONTROL 2.....24
REMO CON ATTACHMENT.....26
BRACKET 1.....28
BRACKET 2.....30
UPPER CASING.....32
LOWER CASING & DRIVE 1.....34
LOWER CASING & DRIVE 2.....38
FUEL TANK.....39
STEERING GUIDE.....40
REMOTE CONTROL BOX.....41
REMOTE CONTROL ASSY.....42
REPAIR KIT 1.....45
REPAIR KIT 2.....46

INDEX

NUMERICAL INDEX.....48

CONTENIDO

PARTES DE REPUESTO TEMPORALES..... 1
SOPORTE SUPERIOR..... 2
CYLINDRO & CARTER..... 3
CIGUENAL & PISTON.....5
ADMISION..... 6
CARBURADOR..... 7
COMBUSTIBLE..... 8
ARRANQUE..... 10
GENERADOR.....12
EQUIPO ELECTRICO 1..... 13
EQUIPO ELECTRICO 2..... 14
EQUIPO ELECTRICO 3..... 15
EQUIPO ELECTRICO 4..... 17
MOTOR DE ARRANQUE..... 19
CUBIERTA INFERIOR..... 20
DIRECCION.....21
CONTROL 1..... 22
CONTROL 2..... 24
CONJUNTO ADITAMENTO..... 26
SOPORTE 1..... 28
SOPORTE 2..... 30
FUNDA SUPERIOR.....32
IMPULSOR E INFERIOR 1..... 34
IMPULSOR E INFERIOR 2..... 38
DEPOSITO DE COMBUSTIBLE..... 39
DIRECCIONGUIAR..... 40
CONTROL REMOTO COMPLETO..... 41
CONTROL REMOTO COMPL.....42
ESTUCHE REPARATION 1..... 45
ESTUCHE REPARATION 2..... 46

INDICE

INDICE NUMERICO..... 48

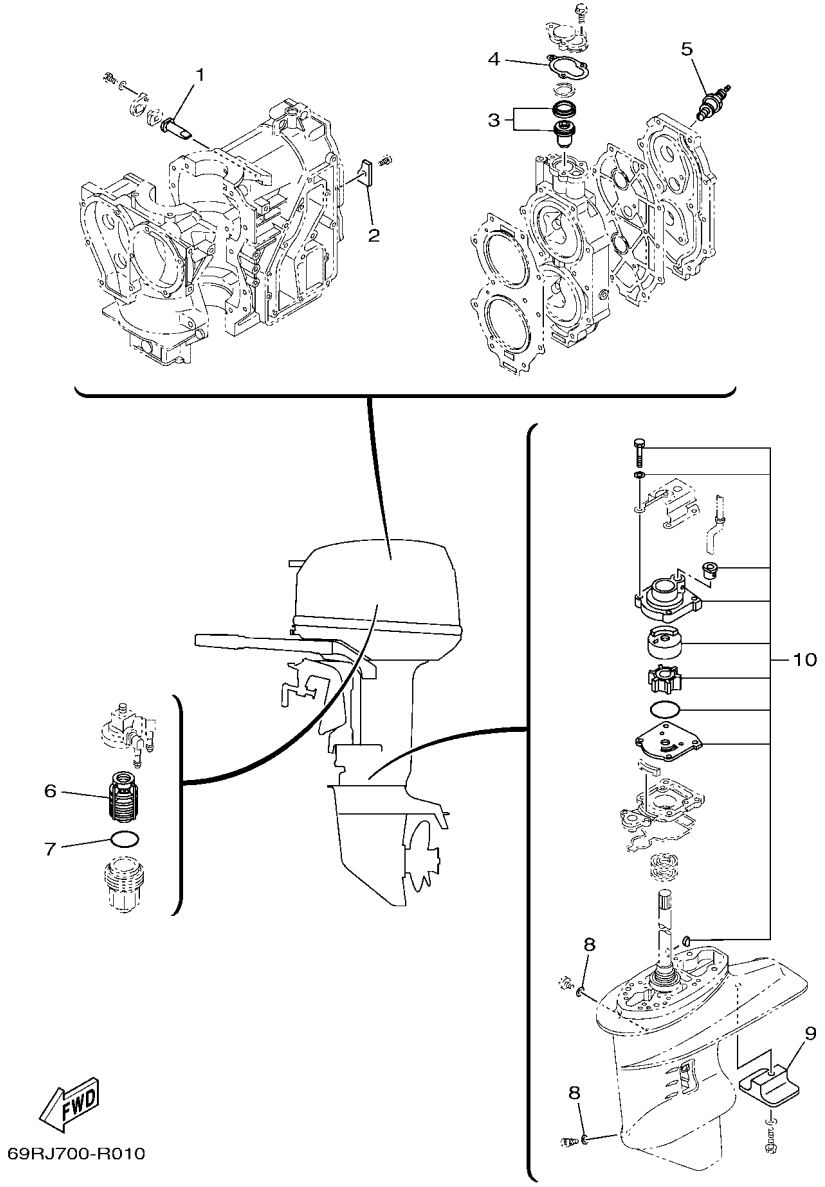

FIG. 1 SCHEDULED SERVICE PARTS — PARTES DE REPUESTO TEMPORALES

REF. NO.	PART NO. CODIGO Nº	DESCRIPTION DESCRIPCION	MH	WH	W	WC		REMARKS OBSERVACIONES
1	6J8–11325–00	ANODE ANODO	1	1	1	1		
2	689–11325–00	ANODE ANODO	1	1	1	1		
3	6E5–12411–02	THERMOSTAT TERMOSTAT	1	1	1	1		
4	655–12414–A1	GASKET, COVER EMPAQUE	1	1	1	1		
5	94702–00217	PLUG, SPARK (NGK B7HS-10) BUJIA (NGK B7HS-10)	2		2			UR E25B,25B UR E25B,25B
	94702–00160	PLUG, SPARK (NGK B8HS-10) BUJIA (NGK B8HS-10)	2	2				UR E30H,30H UR E30H,30H
	94702–00271	PLUG, SPARK (NGK BR7HS-10) BUJIA (NGK BR7HS-10)	2		2	2		UR (E)25B-FOR CAR,RUS UR (E)25B-FOR CAR,RUS
	94702–00247	PLUG, SPARK (NGK BR8HS-10) BUJIA (NGK BR8HS-10)	2	2	2	2		UR 30H-FOR CAR,CHN,RUS UR 30H-FOR CAR,CHN,RUS
6	61N–24563–00	ELEMENT, FILTER ELEMENTO DEL FILTRO	1	1	1	1		
7	93210–32738	O-RING ANILLO O	1	1	1	1		
8	90430–08003	GASKET JUNTA	2	2	2	2		
9	61N–45251–01	ANODE CATODE	1	1	1	1		
10	69P–W0078–00	WATER PUMP REPAIR KIT ESTUCHE REPARACION BOMBA AGUA	1	1	1	1		

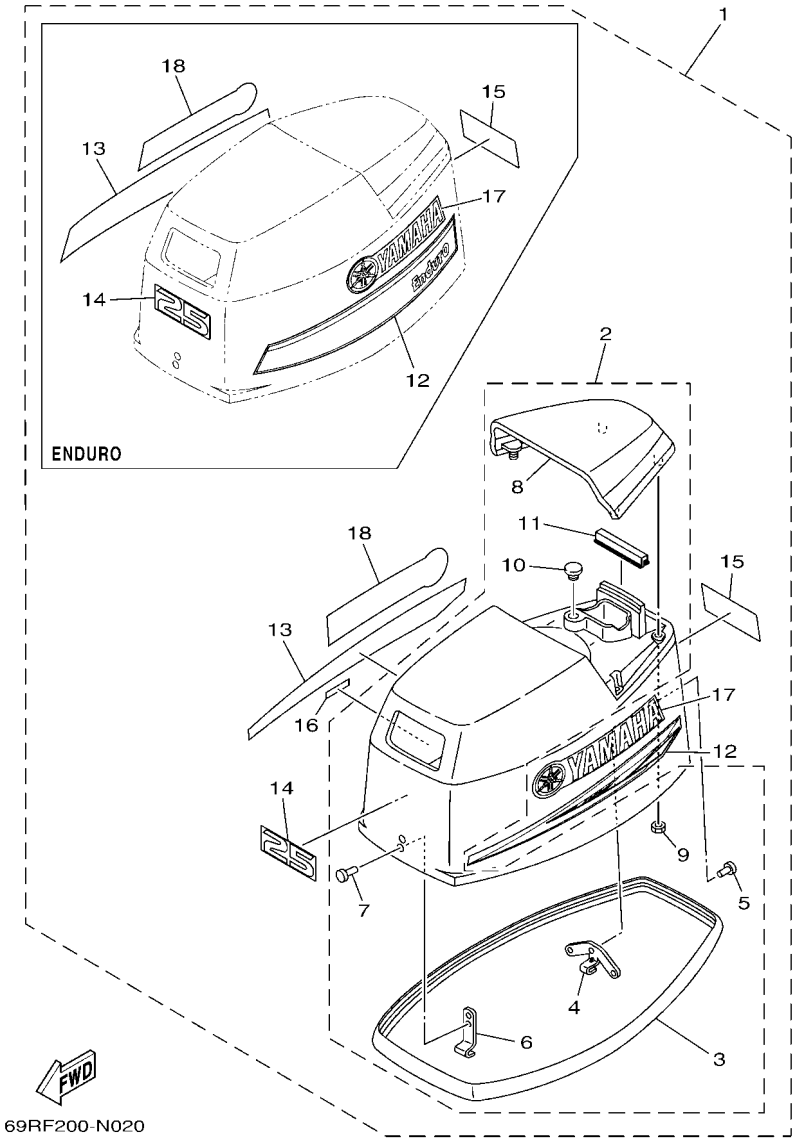

FIG. 2 TOP COWLING — SOPORTE SUPERIOR

REF. NO.	PART NO. CODIGO Nº	DESCRIPTION DESCRIPCION	MH	WH	W	WC		REMARKS OBSERVACIONES
1	69R–42610–50	TOP COWLING ASSY SOPORTE SUPERIOR COMPL.	1		1	1		25B 25B
	69S–42610–50	TOP COWLING ASSY SOPORTE SUPERIOR COMPL.	1	1	1	1		30H 30H
	69P–42610–10	TOP COWLING ASSY SOPORTE SUPERIOR COMPL.	1					E25B E25B
	60B–42610–10	TOP COWLING ASSY SOPORTE SUPERIOR COMPL.	1					E30H E30H
2	69P–4261A–10	.TOP COWLING W/O GRAPHICS .SOPORTE SUPERIOR SIN GRAFICOS	1	1	1	1		
3	6G0–42615–00	..SEAL ..SELLO	1	1	1	1		
4	689–42647–00	..HOLDER, CLAMP BAND ..MORDAZA DE ABRAZADERA	1	1	1	1		
5	90266–04M01	..RIVET ..REMACHE	3	3	3	3		
6	6G0–42651–02	..HOOK ..GANCHO	1	1	1	1		
7	90266–04M00	..RIVET ..REMACHE	2	2	2	2		
8	69P–42613–10–8D	..MOLDING, AIR DUCT ..MOLDURA CONDUCTO AIRE	1	1	1	1		
9	90179–06M24	..NUT ..TUERCA	4	4	4	4		
10	90480–14M14	..GROMMET ..TAPON	1	1	1	1		
11	61N–42628–00	..SEAL ..SELLO DE GOMA	1	1	1	1		
12	61R–42675–40	.GRAPHIC, SIDE 1 .CALCAMONIA LATERAL 1	1	1	1	1		25B,30H 25B,30H
	61N–42675–40	.GRAPHIC, SIDE 1 .CALCAMONIA LATERAL 1	1					E25B,E30H E25B,E30H
13	61R–42676–40	.GRAPHIC, SIDE 2 .CALCAMONIA LATERAL 2	1	1	1	1		25B,30H 25B,30H
	61N–42676–40	.GRAPHIC, SIDE 2 .CALCAMONIA LATERAL 2	1					E25B,E30H E25B,E30H
14	6L2–42678–40	.GRAPHIC, REAR .CALCAMONIA TRASERA	1		1	1		E25B,25B E25B,25B
	61T–42678–40	.GRAPHIC, REAR .CALCAMONIA TRASERA	1	1	1	1		E30H,30H E30H,30H
15	6L2–42678–40	.GRAPHIC, REAR .CALCAMONIA TRASERA	1		1	1		E25B,25B E25B,25B
	61T–42678–40	.GRAPHIC, REAR .CALCAMONIA TRASERA	1	1	1	1		E30H,30H E30H,30H
16	6X3–44191–00	.INDICATOR, SHIFT .INDICADOR DE CAMBIOS	1	1	1	1		
17	61R–42681–00	.MARK, COWLING .MARCA DE CUBIERTA	1	1	1	1		
18	61R–42681–00	.MARK, COWLING .MARCA DE CUBIERTA	1	1	1	1		

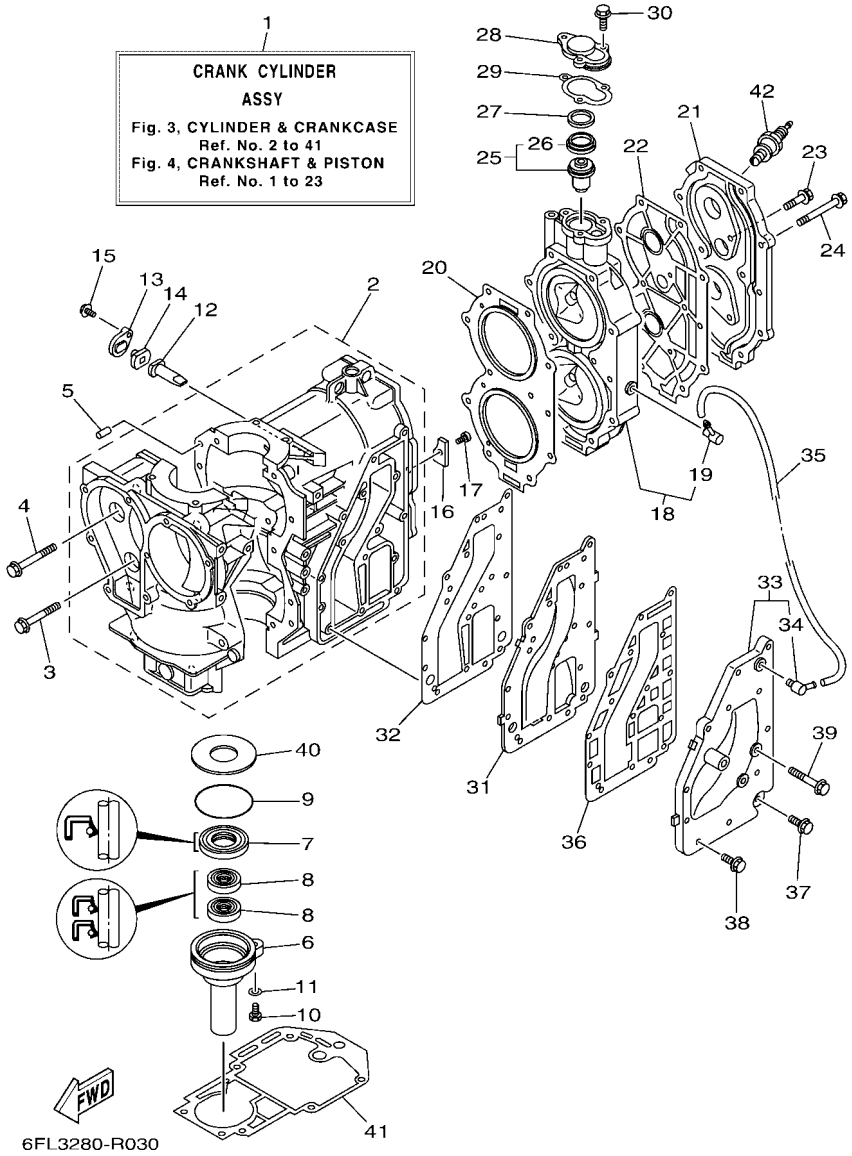

FIG. 3 CYLINDER & CRANKCASE — CYLINDRO & CARTER

REF. NO.	PART NO. CODIGO Nº	DESCRIPTION DESCRIPCION	MH	WH	W	WC		REMARKS OBSERVACIONES
1	69P–W0090–00–1S	CRANK CYLINDER ASSY BLOQUE MOTOR COMPLETO	1		1	1		E25B,25B E25B,25B
	69S–W0090–00–1S	CRANK CYLINDER ASSY BLOQUE MOTOR COMPLETO	1	1	1	1		E30H,30H E30H,30H
2	69P–15100–00	CRANKCASE ASSY CARTER COMPLETO	1	1	1	1		
3	90119–08009	BOLT, WITH WASHER TORNILLO CON ARANDELA	2	2	2	2		
4	90119–08M65	BOLT, WITH WASHER TORNILLO CON ARANDELA	8	8	8	8		
5	93606–12019	PIN, DOWEL PASADOR DE CLAVIJA	2	2	2	2		
6	689–15396–01–CA	HOUSING, OIL SEAL CAJA DE SELLO DE ACEITE	1	1	1	1		
7	93102–25008	OIL SEAL SELLO ACEITE	1	1	1	1		
8	93101–16001	OIL SEAL SELLO ACEITE	2	2	2	2		
9	93210–58M21	O-RING ANILLO O	1	1	1	1		
10	97095–06022	BOLT PERNO	1	1	1	1		
11	92995–06600	WASHER ARANDELA	1	1	1	1		
12	6J8–11325–00	ANODE ANODO	1	1	1	1		
13	6H3–11327–00–94	COVER, ANODE CUBIERTA DE ANODO	1	1	1	1		
14	6H3–11328–00	GROMMET, ANODE TAPON	1	1	1	1		
15	97513–06516	BOLT, WITH WASHER PERNO CON ARANDELA	1	1	1	1		
16	689–11325–00	ANODE ANODO	1	1	1	1		
17	90151–06M02	SCREW, COUNTERSUNK TORNILLO EMBUTIDO	1	1	1	1		
18	61N–11111–01–1S	HEAD, CYLINDER 1 CULATA CILINDRO 1	1		1	1		E25B,25B E25B,25B
	61T–11111–01–1S	HEAD, CYLINDER 1 CULATA CILINDRO 1	1	1	1	1		E30H,30H E30H,30H
19	676–11372–00	.NIPPLE, HOSE .NIPLE DE MANGUERA	1	1	1	1		
20	61N–11181–A2	GASKET, CYLINDER HEAD 1 JUNTA, DE CULATA 1	1	1	1	1		
21	61N–11191–01–1S	COVER, CYLINDER HEAD 1 TAPA CULATA DE CILINDRO 1	1	1	1	1		
22	61T–11193–A1	GASKET, HEAD COVER 1 EMPAQUE	1	1	1	1		
23	90119–06MA2	BOLT, WITH WASHER TORNILLO CON ARANDELA	2	2	2	2		
24	90119–08015	BOLT, WITH WASHER TORNILLO CON ARANDELA	11	11	11	11		
25	6E5–12411–02	THERMOSTAT TERMOSTAT	1	1	1	1		

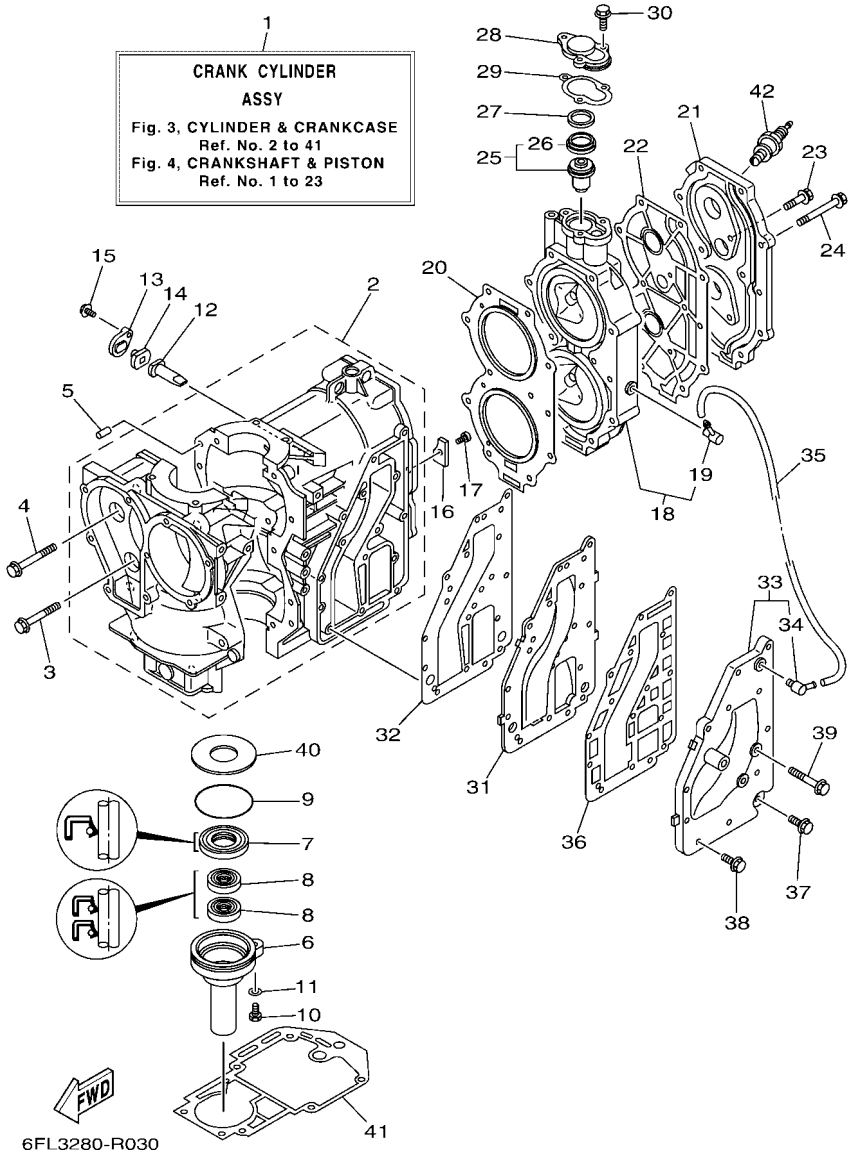

FIG. 3 CYLINDER & CRANKCASE — CYLINDRO & CARTER

REF. NO.	PART NO. CODIGO Nº	DESCRIPTION DESCRIPCION	MH	WH	W	WC		REMARKS OBSERVACIONES
26	6E5–12412–00	.SEAL, THERMOSTAT .SELLO TERMOSTATO	1	1	1	1		
27	90201–21567	WASHER, PLATE ARANDELA PLANA	1	1	1	1		
28	655–12413–01–1S	COVER, THERMOSTAT CUBIERTA TERMOSTATO	1	1	1	1		
29	655–12414–A1	GASKET, COVER EMPAQUE	1	1	1	1		
30	90119–06MA2	BOLT, WITH WASHER TORNILLO CON ARANDELA	3	3	3	3		
31	6K8–41121–00–1S	INNER COVER,EXHAUST CUBIERTA INTERIOR DE ESCAPE	1	1	1	1		
32	6K8–41122–A1	GASKET, EXHAUST INNER COVER EMPAQUE	1	1	1	1		
33	61N–41123–01–1S	OUTER COVER, EXHAUST CUBOERTA EXTERIOR DE ESCAPE	1	1	1	1		
34	676–11372–00	.NIPPLE, HOSE .NIPLE DE MANGUERA	1	1	1	1		
35	90445–09068	HOSE (L110) TUBO (L110)	1	1	1	1		
36	6K8–41124–A1	GASKET, EXHAUST OUTER COVER EMPAQUE	1	1	1	1		
37	90119–06MA3	BOLT, WITH WASHER TORNILLO CON ARANDELA	1	1	1	1		
38	90119–06MA4	BOLT, WITH WASHER TORNILLO CON ARANDELA	11	11	11	11		
39	90119–06MA0	BOLT, WITH WASHER TORNILLO CON ARANDELA	3	3	3	3		
40	90201–50306	WASHER, PLATE ARANDELA PLANA	1	1	1	1		
41	689–45113–A1	GASKET, UPPER CASING EMPAQUE	1	1	1	1		
42	94702–00217	PLUG, SPARK (NGK B7HS-10) BUJIA (NGK B7HS-10)	2		2			E25B,25B E25B,25B
	94702–00160	PLUG, SPARK (NGK B8HS-10) BUJIA (NGK B8HS-10)	2	2				E30H,30H E30H,30H
	94702–00271	PLUG, SPARK (NGK BR7HS-10) BUJIA (NGK BR7HS-10)	2		2	2		(E)25B-FOR CAR,RUS (E)25B-FOR CAR,RUS
	94702–00247	PLUG, SPARK (NGK BR8HS-10) BUJIA (NGK BR8HS-10)	2	2	2	2		30H-FOR CAR,CHN,RUS 30H-FOR CAR,CHN,RUS

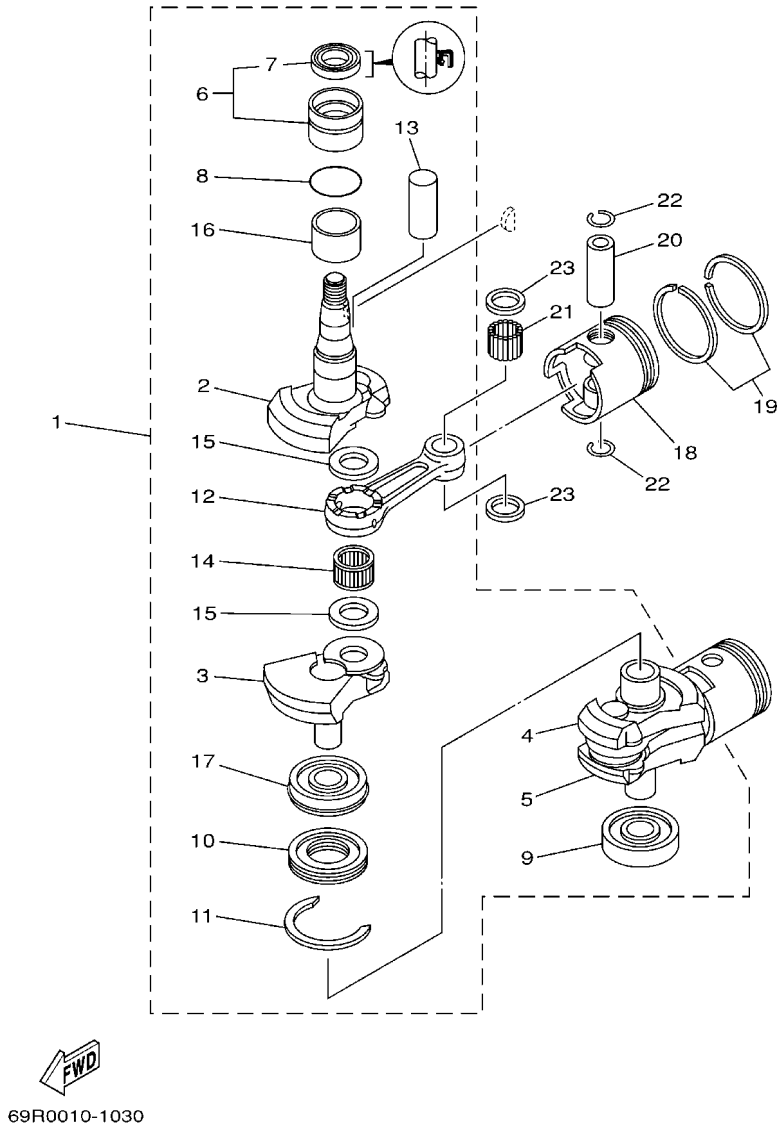

FIG. 4 CRANKSHAFT & PISTON — CIGUENAL & PISTON

REF. NO.	PART NO. CODIGO Nº	DESCRIPTION DESCRIPCION	MH	WH	W	WC		REMARKS OBSERVACIONES
1	69P–11400–00	CRANKSHAFT ASSY CIGUENAL COMPLETO	1	1	1	1		
2	69P–11412–00	.CRANK 1 .MANIVELA 1	1	1	1	1		
3	61N–11422–00	.CRANK 2 .MANIVELA 2	1	1	1	1		
4	61N–11432–00	.CRANK 3 .MANIVELA 3	1	1	1	1		
5	61N–11442–00	.CRANK 4 .MANIVELA 4	1	1	1	1		
6	93399–99951	.BEARING .COJINETE	1	1	1	1		
7	93102–32M07	..OIL SEAL ..SELLO ACEITE	1	1	1	1		
8	93210–46M16	.O-RING .ANILLO O	1	1	1	1		
9	93306–305U3	.BEARING .COJINETE	1	1	1	1		
10	61N–11515–00	.SEAL, LABYRINTH 1 .SELLO LABERINTO 1	1	1	1	1		
11	93440–62057	.CIRCLIP .SEGURO	1	1	1	1		
12	689–11651–00	.ROD, CONNECTING .BIELA	2	2	2	2		
13	689–11681–01	.PIN, CRANK 1 .PASADOR MANIVELA 1	2	2	2	2		
14	93310–62406	.BEARING .COJINETE DE RODILLOS	2	2	2	2		
15	90209–24M03	.WASHER .ARANDELA DE SEPARACION	4	4	4	4		
16	90387–32002	.COLLAR .ESPACIADOR	1	1	1	1		
17	93390–00009	.BEARING .COJINETE DE RODILLOS	1	1	1	1		
18	61N–11631–00–95	PISTON (STD) PISTON (NORMA)	2	2	2	2		
	61N–11635–00	PISTON (0.25MM O/S) PISTON (0.25MM O/S)	2	2	2	2		AP AP
	61N–11636–00	PISTON (0.50MM O/S) PISTON (0.50MM O/S)	2	2	2	2		AP AP
19	61N–11603–00	PISTON RING SET (STD) JUEGO DE ANILLOS (NORMA)	2	2	2	2		
	61N–11604–00	PISTON RING SET (0.25MM O/S) JUEGO DE ANILLOS (0.25MM O/S)	2	2	2	2		AP AP
	61N–11605–00	PISTON RING SET (0.50MM O/S) JUEGO DE ANILLOS (0.50MM O/S)	2	2	2	2		AP AP
20	689–11633–00	PIN, PISTON PASADOR, PISTON	2	2	2	2		
21	93602–20M02	PIN, DOWEL PASADOR DE CLAVIJA	68	68	68	68		
22	688–11634–00	CLIP, PISTON PIN PRESILLA, BULON DE PISTON	4	4	4	4		
23	90201–20M27	WASHER, PLATE ARANDELA PLANA	4	4	4	4		

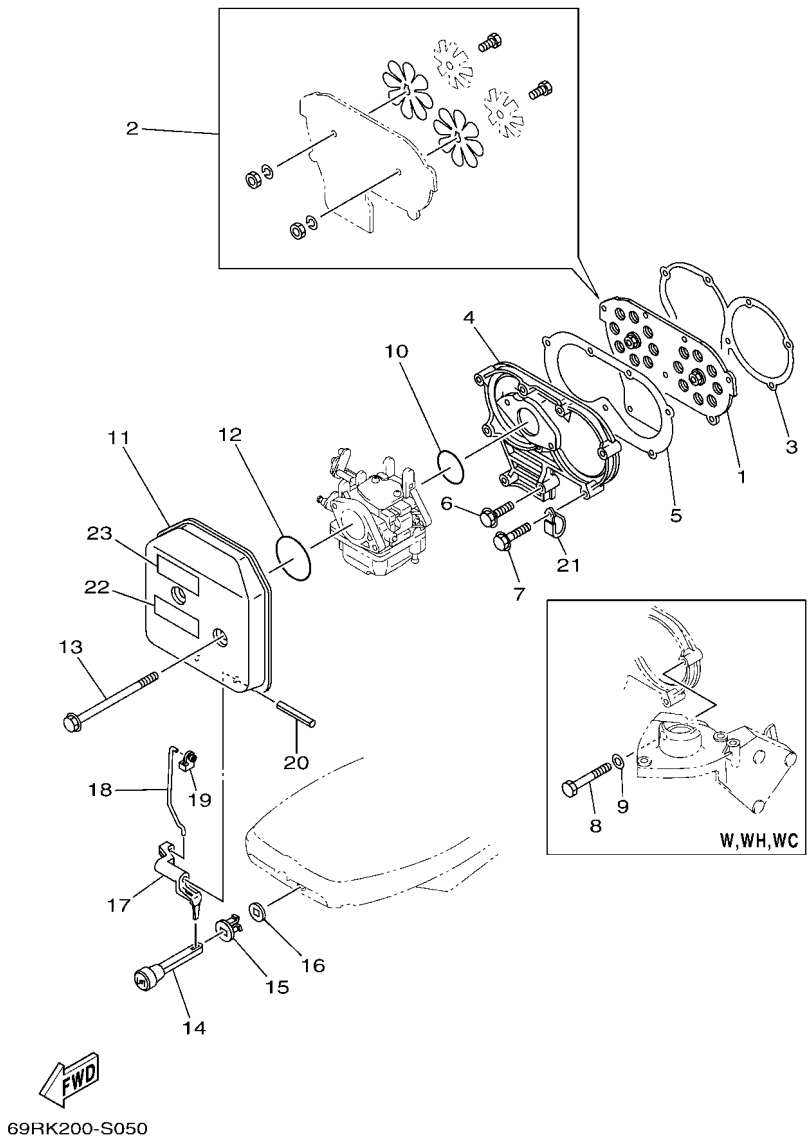

FIG. 5 INTAKE — ADMISION

REF. NO.	PART NO. CODIGO Nº	DESCRIPTION DESCRIPCION	MH	WH	W	WC		REMARKS OBSERVACIONES
1	61N–13610–00	REED VALVE ASSY VALVULA DE LAMINAS COMPLETA	1		1	1		E25B,25B E25B,25B
	689–13610–01	REED VALVE ASSY VALVULA DE LAMINAS COMPLETA	1	1	1	1		E30H,30H E30H,30H
2	689–W0004–00	.REED SET .JUEGO DE VALVULAS DE LENGUETA	1	1	1	1		
3	648–13621–A1	GASKET, VALVE SEAT JUNTA, DE VALV.DE EMPAQUE	1	1	1	1		
4	61N–13641–01	MANIFOLD, INTAKE 1 CONECTOR DE ADMISSION 1	1	1	1	1		
5	648–13645–A0	GASKET, MANIFOLD 1 EMPAQUE	1	1	1	1		
6	97513–06525	BOLT, WITH WASHER PERNO CON ARANDELA	2	2	2	2		
7	97513–06535	BOLT, WITH WASHER PERNO CON ARANDELA	7					
	97513–06535	BOLT, WITH WASHER PERNO CON ARANDELA		6	6	6		
8	97013–06050	BOLT PERNO		1	1	1		
9	92903–06600	WASHER, PLATE RONDANA SENCILLA		1	1	1		
10	61N–14198–00	GASKET EMPAQUE	1	1	1	1		
11	61N–14440–A1	SILENCER ASSY, INTAKE SILENCIADOR COMPL DE ADMISION	1	1	1	1		
12	93210–40659	O-RING ANILLO O	1	1	1	1		
13	90119–06M94	BOLT, WITH WASHER TORNILLO CON ARANDELA	2	2	2	2		
14	682–41271–01	KNOB, CHOKE PERILLA AHOGADOR	1	1	1	1		
15	689–41273–00	GROMMET TAPON PROTECTOR	1	1	1	1		
16	6J8–41274–00	GROMMET 2 TAPON 2	1	1	1	1		
17	689–41252–01	LEVER, CHOKE 1 PALANCA AHOGADOR 1	1	1	1	1		
18	61N–41256–00	ROD, CHOKE 1 VARILLA DE AHOGADOR	1	1	1	1		
19	661–41262–02	JOINT, CHOKE LEVER CONECTOR DE AHOGADOR	1	1	1	1		
20	91690–40048	PIN, SPRING PASADOR DE RESORTE	1	1	1	1		
21	90465–06M88	CLAMP BRIDA	1	1	1	1		
22	6EE–81994–40	LABEL, SAFETY ETIQUETA DE SEGURIDAD	1	1	1	1		
23	6AG–81996–00	MARK MARCA			1	1		FOR RUS FOR RUS

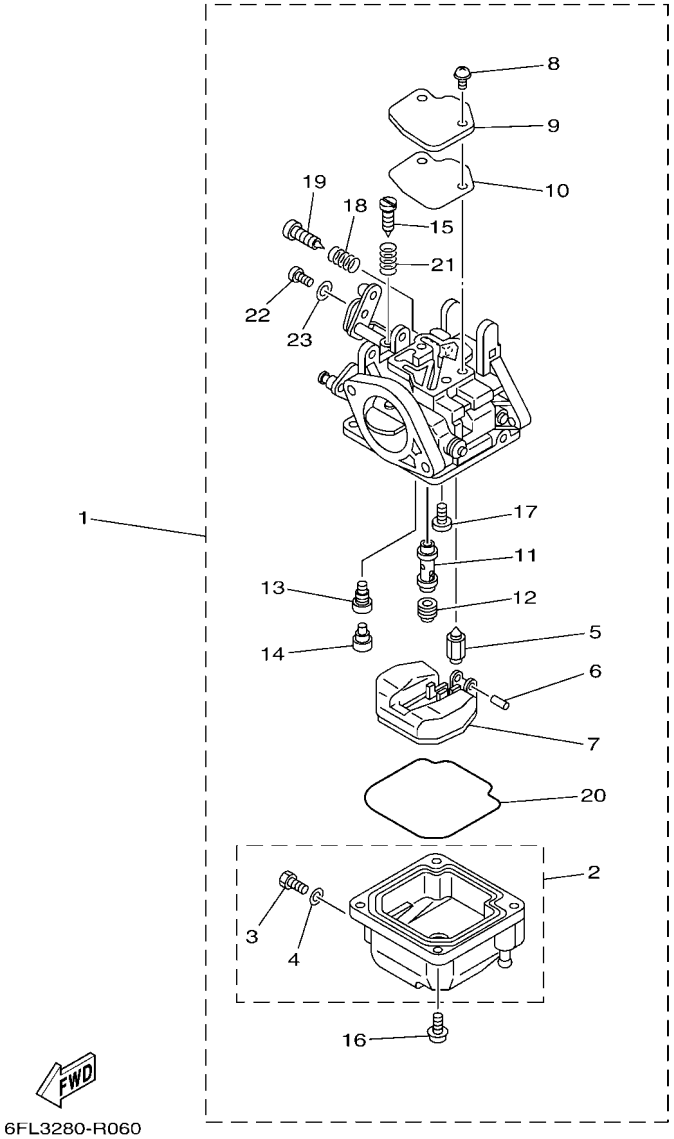

FIG. 6 CARBURETOR — CARBURADOR

REF. NO.	PART NO. CODIGO Nº	DESCRIPTION DESCRIPCION	MH	WH	W	WC		REMARKS OBSERVACIONES
1	69P–14301–00	CARBURETOR ASSY 1 CARBURADOR COMPLETO 1	1		1	1		E25B,25B E25B,25B
	69S–14301–00	CARBURETOR ASSY 1 CARBURADOR COMPLETO 1	1	1	1	1		E30H,30H E30H,30H
2	61N–14381–00	.BODY, FLOAT CHAMBER .CUERPO DE CAMARA DE BOIA	1	1	1	1		
3	677–14383–01	..SCREW, DRAIN ..TORNILLO DE DRENAJE	1	1	1	1		
4	6L2–14398–00	..GASKET ..EMPAQUE	1	1	1	1		
5	61N–14392–00	.VALVE, NEEDLE .VALVULA DE AGUJA	1	1	1	1		
6	6E5–14386–01	.PIN, FLOAT .PASADOR DE BOIA	1	1	1	1		
7	6L2–14385–00	.FLOAT .BOIA	1	1	1	1		
8	97980–04110	.SCREW, WITH WASHER .TORNILLO, CON ARANDELA	2	2	2	2		
9	6L2–14157–00	.COVER, MIXING .CUBIERTA DE MEZCLA	1	1	1	1		
10	6L2–14399–00	.GASKET .EMPAQUE	1	1	1	1		
11	61N–14341–00	.NOZZLE, MAIN .BOQUILLA PRINCIPAL	1		1	1		FOR 69P-14301-00 FOR 69P-14301-00
	61T–14341–00	.NOZZLE, MAIN .BOQUILLA PRINCIPAL	1	1	1	1		FOR 69S-14301-00 FOR 69S-14301-00
12	61N–14343–65	.JET, MAIN (#130) .INYECTOR PRINCIPAL (#130)	1	1	1	1		
13	6L2–14342–34	.JET, PILOT (# 68) .ESPREA DE PILOTO (# 68)	1	1	1	1		
14	50M–14355–00	.PLUG .TAPON	1	1	1	1		
15	664–14321–01	.SCREW, THROTTLE .TORNILLO DE OBTURADOR	1	1	1	1		
16	97980–04112	.SCREW, WITH WASHER .TORNILLO, CON ARANDELA	4	4	4	4		
17	98980–04006	.SCREW, BIND .TORNILLO DE LIGAR	2	2	2	2		
18	646–14212–01	.SPRING, PILOT ADJUSTING .RESORTE DE AJUSTE DE PILOTO	1	1	1	1		
19	61N–14323–00	.SCREW, AIR ADJUSTING .TORNILLO DE AJUSTE DE AIRE	1	1	1	1		
20	6L2–14384–00	.GASKET, FLOAT CHAMBER .EMPAQUE DE CAMARA DE BOIA	1	1	1	1		
21	61N–14212–00	.SPRING, PILOT ADJUSTING .RESORTE DE AJUSTE DE PILOTO	1	1	1	1		
22	97890–05006	.SCREW, PAN HEAD .TORNILLO	1	1	1	1		
23	62Y–14597–00	.WASHER .ARANDELA	1	1	1	1		

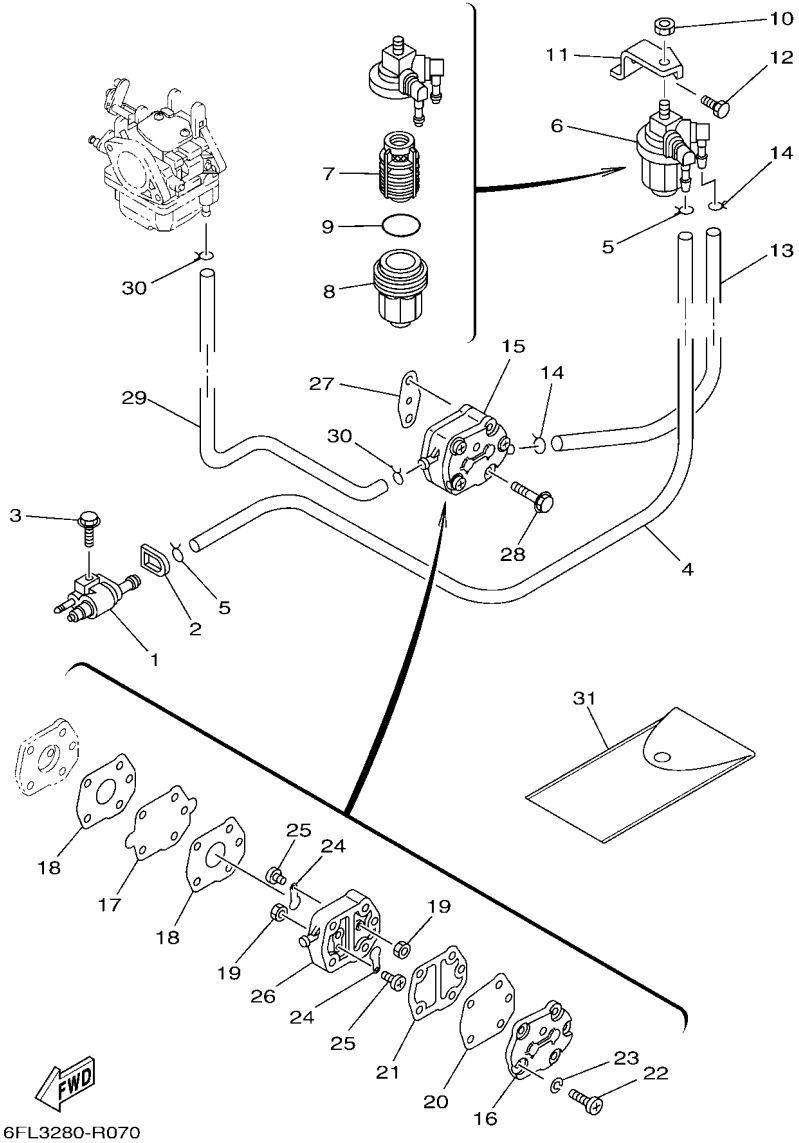

FIG. 7 FUEL — COMBUSTIBLE

REF. NO.	PART NO. CODIGO Nº	DESCRIPTION DESCRIPCION	MH	WH	W	WC		REMARKS OBSERVACIONES
1	6G1–24304–10	FUEL PIPE JOINT COMP. 1 CONECTOR MANGUERA COMBUST.1	1	1	1	1		
2	61N–24329–00	SEAL SELLO	1	1	1	1		
3	97595–06520	BOLT, WITH WASHER PERNO CON ARANDELA	1	1	1	1		
4	90445–09M75	HOSE (L370) TUBO (L370)	1	1	1	1		
5	90467–08004	CLIP PRESILLA	2	2	2	2		
6	61N–24560–00	FILTER ASSY FILTRO COMPLETO	1	1	1	1		
7	61N–24563–00	.ELEMENT, FILTER .ELEMENTO DEL FILTRO	1	1	1	1		
8	61N–24521–00	.CUP, FILTER .COPA DE FILTRO	1	1	1	1		
9	93210–32738	.O-RING .ANILLO O	1	1	1	1		
10	95380–08600	NUT TUERCA	1	1	1	1		
11	61N–24566–10	BRACKET, FILTER SOPORTE DEL FILTRO	1	1	1	1		
12	97013–06014	BOLT PERNO	1	1	1	1		
13	689–24311–00	PIPE, FUEL 1 TUBO DE COMBUSTIBLE 1	1	1	1	1		
14	90467–08004	CLIP PRESILLA	2	2	2	2		
15	692–24410–00	FUEL PUMP ASSY BOMBA DE COMBUSTIBLE COMPLETA	1	1	1	1		
16	6A0–24413–00	.BODY 2 .CUERPO 2	1	1	1	1		
17	692–24411–00	.DIAPHRAGM .DIAFRAGMA	1	1	1	1		
18	648–24434–01	.GASKET, BODY .EMPAQUE	2	2	2	2		
19	95380–03600	.NUT .TUERCA	2	2	2	2		
20	663–24411–00	.DIAPHRAGM .DIAFRAGMA	1	1	1	1		
21	648–24435–02	.GASKET, BODY 2 .EMPAQUE	1	1	1	1		
22	98503–05028	.SCREW, PAN HEAD .TORNILLO DE CABEZA DE CONO ACH	3	3	3	3		
23	92990–05100	.WASHER, SPRING .ARANDELA PLANA	3	3	3	3		
24	6A0–24421–01	.VALVE, CHECK .VALVULA DE RETENCION	2	2	2	2		
25	6A0–14325–00	.SCREW, PAN HEAD .TORNILLO CABEZA REDONDA	2	2	2	2		
26	6A0–24412–02	.BODY 1 .CUERPO 1	1	1	1	1		
27	650–24431–A0	GASKET, FUEL PUMP 1 EMPAQUE BOMBA COMBUST 1	1	1	1	1		

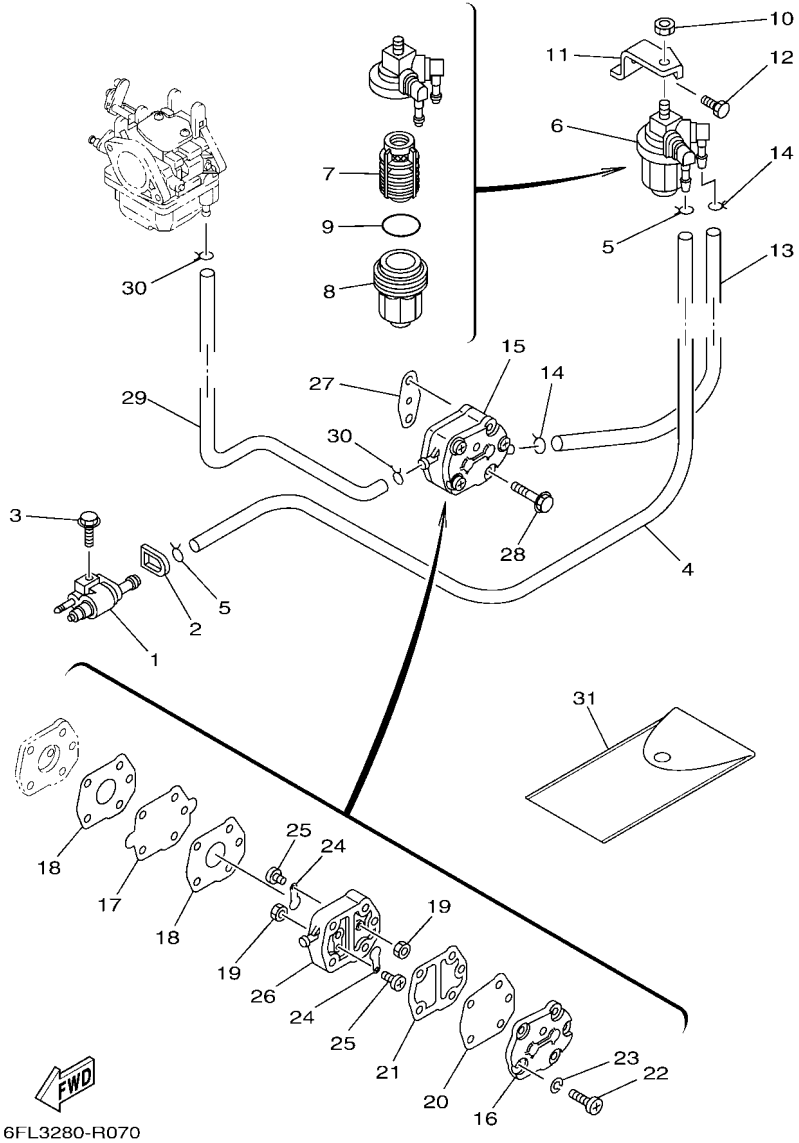

FIG. 7 FUEL — COMBUSTIBLE

REF. NO.	PART NO. CODIGO Nº	DESCRIPTION DESCRIPCION	MH	WH	W	WC		REMARKS OBSERVACIONES
28	97595–06540	BOLT, WITH WASHER PERNO CON ARANDELA	2	2	2	2		
29	6A1–24311–00	PIPE, FUEL 1 TUBO DE COMBUSTIBLE 1	1	1	1	1		
30	90467–08004	CLIP PRESILLA	2	2	2	2		
31	656–W2810–02	TOOL KIT JUEGO DE HERRAMIENTAS	1	1	1	1		

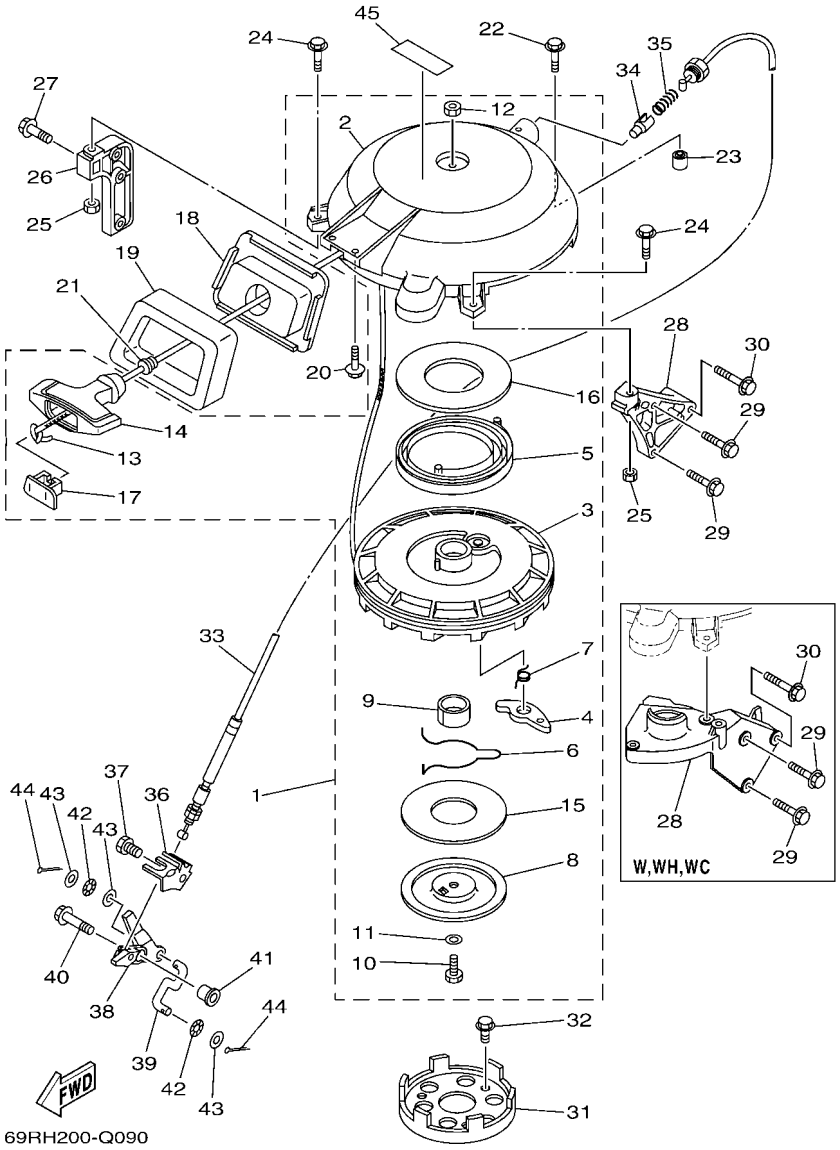

*1:CUT FROM 50M ROLLS,PART NO.90890-44373,CUTTING LENGTH 1.9M

*1:CORTE DE UN RODILLO DE 50M , PARTS NUMERO 90890-44373, LARGO DEL CORTE 1.9M

FIG. 8 STARTER ARRANQUE

REF. NO.	PART NO. CODIGO Nº	DESCRIPTION DESCRIPCION	MH	WH	W	WC		REMARKS OBSERVACIONES
1	61N–W1571–10	STARTER ASSY ARRANQUE COMPLETO	1	1	1	1		
2	61N–15711–10	.CASE, STARTER .CAJA DE ARRANQUE	1	1	1	1		
3	6G0–15714–01	.DRUM, SHEAVE .TAMBOR ROLDANA	1	1	1	1		
4	6F5–15741–01	.PAWL, DRIVE .TRINQUETE DE TRACCION	1	1	1	1		
5	6F5–15713–01	.SPRING, STARTER .RESORTE DE ARRANQUE	1	1	1	1		
6	61N–15715–00	.SPRING, FRICTION .RESORTE PLACA DE TRACCION	1	1	1	1		
7	61N–15734–00	.SPRING, RETURN .RESORTE DE RETORNO	1	1	1	1		
8	6F5–15716–01	.PLATE, DRIVE .PLACA DE TRACCION	1	1	1	1		
9	6G0–15754–00	.BUSH 2 .BUJE 2	1	1	1	1		
10	97013–08030	.BOLT .PERNO	1	1	1	1		
11	6F5–15726–01	.WASHER, FLAT .ARANDELA PLANA	1	1	1	1		
12	95303–08700	.NUT .TUERCA	1	1	1	1		
13	*	.WIRE (L:1900MM) .CABLE (L:1900MM)	1	1	1	1		*1 *1
14	689–15755–01	.HANDLE, STARTER .MANIJA DE ARRANQUE	1	1	1	1		
15	6F5–15764–00	.COLLAR 1 .COLLAR 1	1	1	1	1		
16	6F5–15739–00	.WASHER, THRUST .ARANDELA DE EMPUJE AXIAL	1	1	1	1		
17	6F5–15779–02	.COVER .CUBIERTA	1	1	1	1		
18	69S–15758–00	GUIDE, ROPE GUIA DE CUERDA	1	1	1	1		
19	61N–15762–00	SEAL, RUBBER 2 SELLO DE GOMA 2	1	1	1	1		
20	97595–06516	BOLT, WITH WASHER PERNO CON ARANDELA	2	2	2	2		
21	6A0–15789–00	DAMPER AMORTIGUADOR	1	1	1	1		
22	97595–06535	BOLT, WITH WASHER PERNO CON ARANDELA	1	1	1	1		
23	99530–10014	PIN, DOWEL PASADOR, DE ESPIGA	1	1	1	1		
24	97595–06535	BOLT, WITH WASHER PERNO CON ARANDELA	2	2	2	2		
25	95380–06600	NUT, HEXAGON TUERCA	2					
	95380–06600	NUT, HEXAGON TUERCA		1	1	1		
26	6H7–15771–01–94	STAY 1 SOPORTE 1	1	1	1	1		

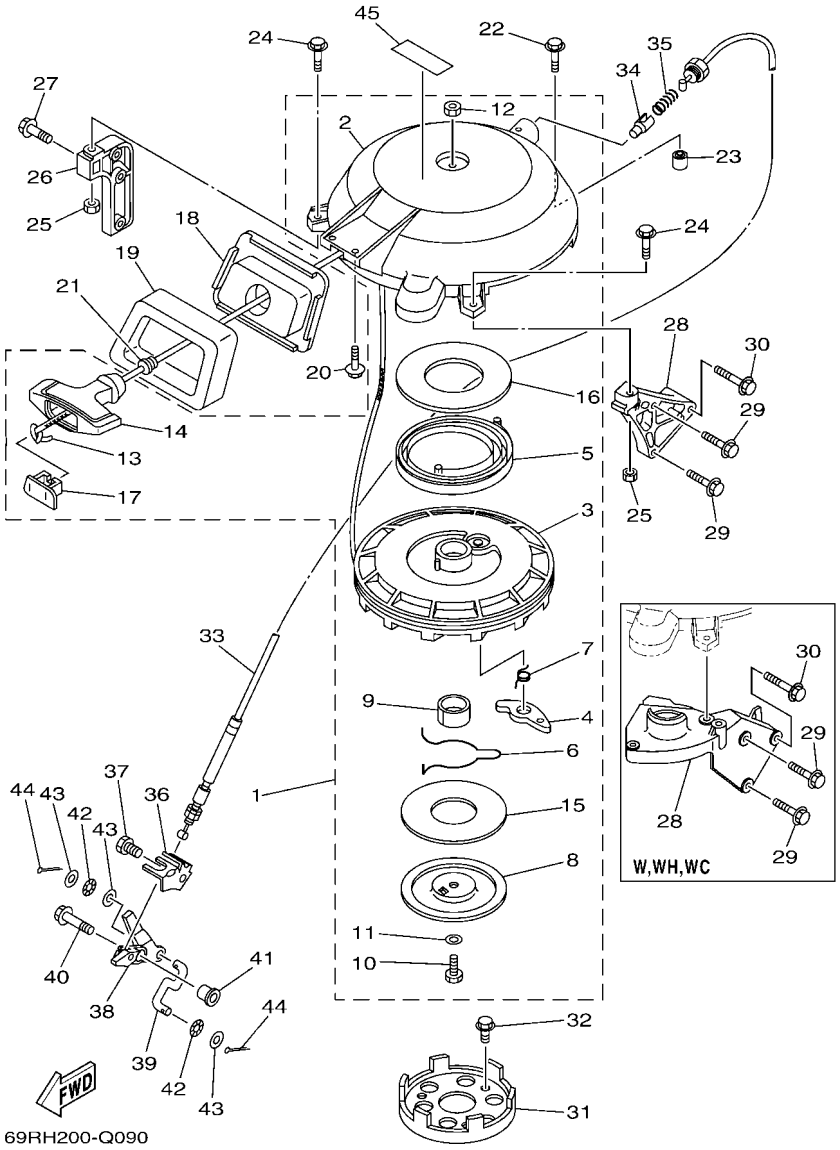

*1:CUT FROM 50M ROLLS,PART NO.90890-44373,CUTTING LENGTH 1.9M

*1:CORTE DE UN RODILLO DE 50M , PARTS NUMERO 90890-44373, LARGO DEL CORTE 1.9M

FIG. 8 STARTER ARRANQUE

REF. NO.	PART NO. CODIGO Nº	DESCRIPTION DESCRIPCION	MH	WH	W	WC		REMARKS OBSERVACIONES
27	90119–06MA3	BOLT, WITH WASHER TORNILLO CON ARANDELA	2	2	2	2		
28	656–15772–00	STAY 2 SOPORTE 2	1					
	61T–15772–01–94	STAY 2 SOPORTE 2		1	1	1		
29	90119–06MA3	BOLT, WITH WASHER TORNILLO CON ARANDELA	2					
	90119–06MA4	BOLT, WITH WASHER TORNILLO CON ARANDELA		2	2	2		
30	90119–06025	BOLT, WITH WASHER TORNILLO CON ARANDELA	1	1	1	1		
31	6F5–15723–01	PULLEY, STARTER POLEA DE ARRANQUE	1	1	1	1		
32	90105–08M10	BOLT, FLANGE TORNILLO	3	3	3	3		
33	61T–15770–00	CABLE COMP., STARTER STOP CABLECOMPL DE SEGURO ARRANQUE	1	1	1	1		
34	656–15748–00	PLUNGER, STARTER STOP EMBOLO SEGURO DE ARRANQUE	1	1	1	1		
35	90501–10227	SPRING, COMPRESSION RESORTE DE COMPRESION	1	1	1	1		
36	69P–15774–00	STAY 4 SOPORTE 4	1	1	1	1		
37	97095–06010	BOLT PERNO	1	1	1	1		
38	69P–15746–00	ARM BRAZO	1	1	1	1		
39	689–15747–70	LINK ESLABON	1	1	1	1		
40	90119–06M23	BOLT, WITH WASHER TORNILLO CON ARANDELA	1	1	1	1		
41	90387–06013	COLLAR ESPACIADOR	1	1	1	1		
42	90206–05005	WASHER, WAVE ARANDELA ONDULADA	2	2	2	2		
43	92903–05600	WASHER, PLATE RONDANA SENCILLA	3	3	3	3		
44	91490–16010	PIN. COTTER CHAVETA	2	2	2	2		
45	6EE–81995–40	LABEL, WARNING ETIQUETA DE PRECAUCION	1	1	1	1		

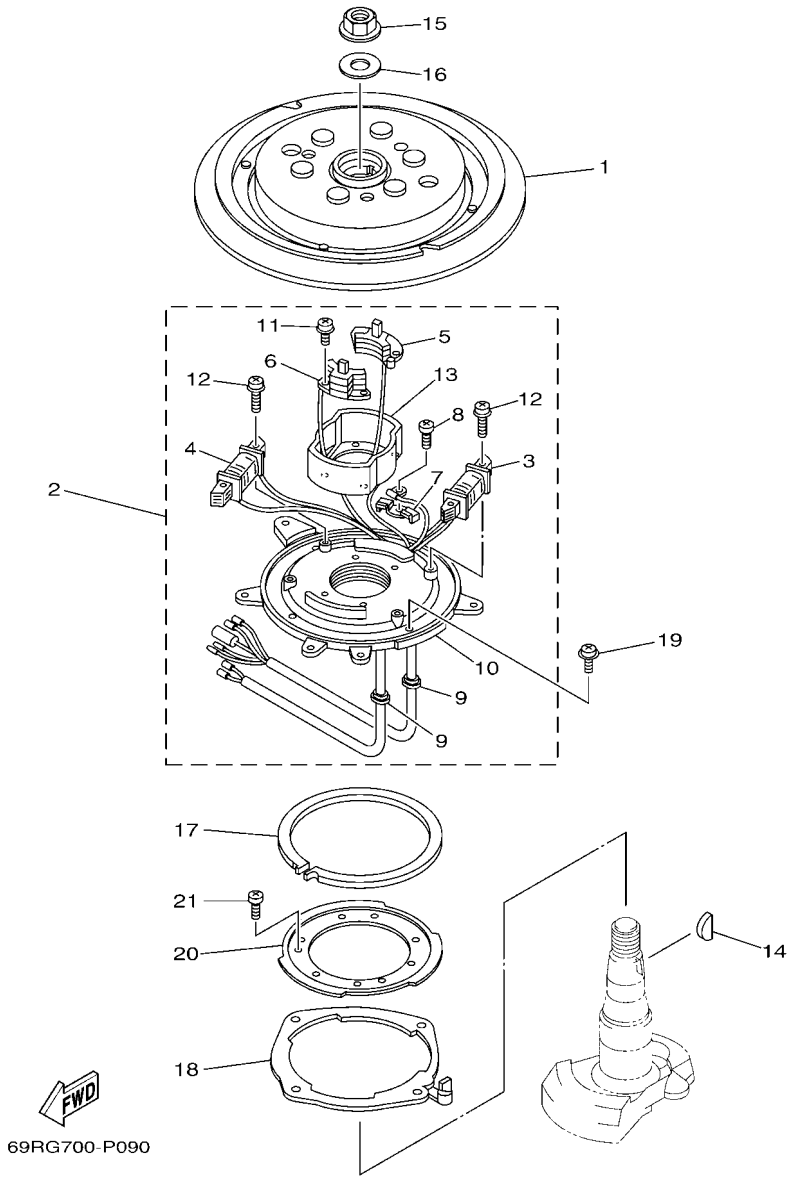

FIG. 9 GENERATOR — GENERADOR

REF. NO.	PART NO. CODIGO Nº	DESCRIPTION DESCRIPCION	MH	WH	W	WC		REMARKS OBSERVACIONES
1	61N–85550–10	ROTOR ASSY ROTOR COMPLETO	1					
	61T–85550–10	ROTOR ASSY ROTOR COMPLETO		1	1	1		
2	69P–85560–00	BASE ASSY CONJUNTO BASE	1	1	1	1		
3	69P–85541–09	.COIL, CHARGE .BOBINA DE CARGA	1	1	1	1		
4	61N–81313–09	.COIL, LIGHTING 1 .BOBINA DE ILUMINACION 1	1	1	1	1		
5	61N–85543–09	.COIL, PULSER .BOBINA DE PULSACION	1	1	1	1		
6	61N–85543–19	.COIL, PULSER .BOBINA DE PULSACION	1	1	1	1		
7	6E9–81328–70	.CLAMP .GRAMPA	1	1	1	1		
8	97802–04006	.SCREW, PAN HEAD .TORNILLO	1	1	1	1		
9	6E9–85516–70	.GROMMET .ESPACIADOR	2	2	2	2		
10	69P–85561–00	.BASE, MAGNETO .BASE DE MAGNETO	1	1	1	1		
11	97607–04112	.SCREW, WITH WASHER .TORNILLO CAB CON PLANA C/ARAN	4	4	4	4		
12	97607–06125	.SCREW, WITH WASHER .TORNILLO CAB CON PLANA C/ARAN	4	4	4	4		
13	61N–85537–00	.COVER .CUBIERTA	1	1	1	1		
14	90280–05015	KEY, WOODRUFF CUNA WOODRUFF	1	1	1	1		
15	90179–16M05	NUT TUERCA	1	1	1	1		
16	90201–16M44	WASHER, PLATE ARANDELA PLANA	1	1	1	1		
17	676–41611–00	RETAINER, MAGNETO BASE RETENEDOR BASE MAGNETO	1	1	1	1		
18	676–41613–00	PLATE, BASE FRICTION PLACA DE BASE DE FRICCION	1	1	1	1		
19	97980–05212	SCREW, WITH WASHER TORNILLO, CON ARANDELA	4	4	4	4		
20	689–41612–10	RETAINER, MAGNETO BASE RETENEDOR BASE MAGNETO	1	1	1	1		
21	97880–06010	SCREW, PAN HEAD TORNILLO DE CABEZA CON PLANA	4	4	4	4		

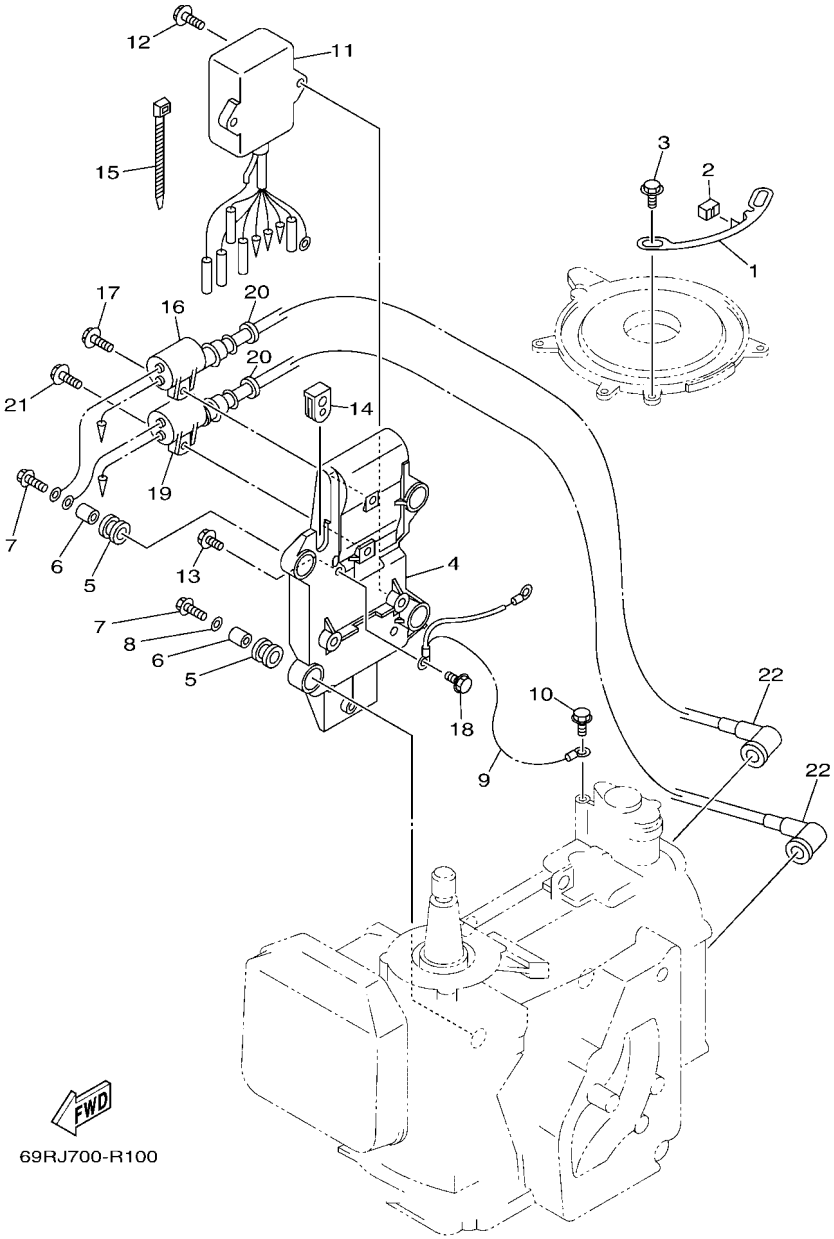

FIG. 10 ELECTRICAL 1 — EQUIPO ELECTRICO 1

REF. NO.	PART NO. CODIGO Nº	DESCRIPTION DESCRIPCION	MH	WH	W	WC		REMARKS OBSERVACIONES
1	61N–41615–00	STOPPER, MAGNETO BASE RETENEDOR, BASE MAGNETO	1	1	1	1		
2	61N–44194–01	CAP TAPA	1		1	1		E25B,25B E25B,25B
	61T–44194–01	CAP TAPA	1	1	1	1		E30H,30H E30H,30H
3	97595–06510	BOLT, WITH WASHER PERNO CON ARANDELA	2	2	2	2		
4	61N–85542–00	BRACKET SOPORTE	1	1	1	1		
5	61N–82317–00	DAMPER, IGNITION COIL AMORTIGUADOR BOBINA ENCENDIDO	4	4	4	4		
6	90387–06119	COLLAR ESPACIADOR	4	4	4	4		
7	90119–06M95	BOLT, WITH WASHER TORNILLO CON ARANDELA	4	4	4	4		
8	90201–06M30	WASHER, PLATE ARANDELA PLANA	2	2	2	2		
9	61N–82519–01	WIRE, EARTH LEAD CABLE CONDUCTOR A TIERRA	1	1	1	1		
10	97590–06512	BOLT, WITH WASHER PERNO CON ARANDELA	1	1	1	1		
11	61N–85540–13	C.D.I. UNIT ASSY UNIDAD C.D.I. COMPLETA	1	1	1	1		
12	97595–06520	BOLT, WITH WASHER PERNO CON ARANDELA	2	2	2	2		
13	97590–06512	BOLT, WITH WASHER PERNO CON ARANDELA	1	1	1	1		
14	6H3–81922–00	GROMMET TAPON PROTECTOR	1	1	1	1		
15	90465–13M11	CLAMP BRIDA	1	1	1	1		
16	61N–85570–00	IGNITION COIL ASSY BOBINA DE IGNICION COMPLETO	1	1	1			
	6H5–85570–00	IGNITION COIL ASSY BOBINA DE IGNICION COMPLETO	1		1	1		25B,30H-FOR CAR,RUS 25B,30H-FOR CAR,RUS
17	97595–06520	BOLT, WITH WASHER PERNO CON ARANDELA	1	1	1	1		
18	97590–06512	BOLT, WITH WASHER PERNO CON ARANDELA	1	1	1	1		
19	61N–85570–10	IGNITION COIL ASSY BOBINA DE IGNICION COMPLETO	1	1	1			
	61N–85570–00	IGNITION COIL ASSY BOBINA DE IGNICION COMPLETO	1		1	1		25B,30H-FOR CAR,RUS 25B,30H-FOR CAR,RUS
20	90480–25161	GROMMET TAPON	2	2	2	2		
21	97595–06520	BOLT, WITH WASHER PERNO CON ARANDELA	1	1	1	1		
22	663–82370–01	PLUG CAP ASSY TAPON DE BUJIA COMPLT	2	2	2			25B,30H 25B,30H
	66T–82370–00	PLUG CAP ASSY TAPON DE BUJIA COMPLT	2					E25B,E30H E25B,E30H
	6G1–82370–21	PLUG CAP ASSY TAPON DE BUJIA COMPLT	2		2	2		(E)25B,30H-FOR CAR,RUS (E)25B,30H-FOR CAR,RUS

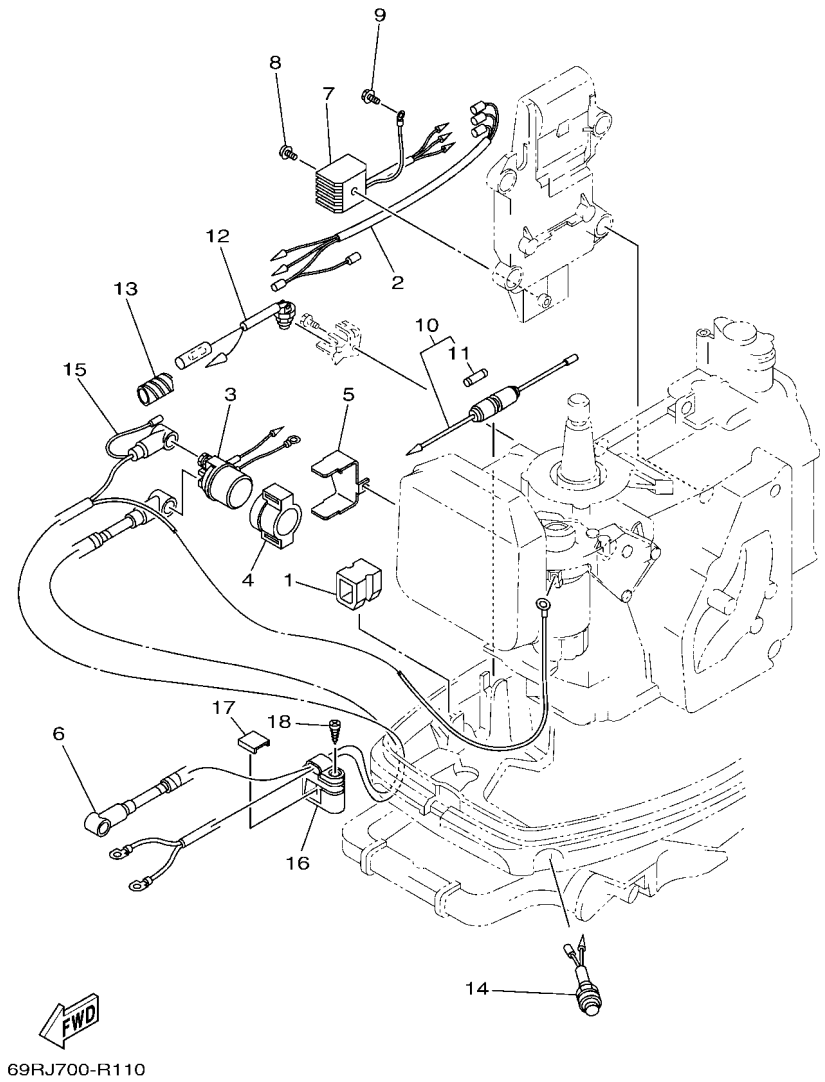

FIG. 11 ELECTRICAL 2 — EQUIPO ELECTRICO 2

REF. NO.	PART NO. CODIGO Nº	DESCRIPTION DESCRIPCION	MH	WH	W	WC		REMARKS OBSERVACIONES
1	90480–17M08	GROMMET TAPON		3				
2	689–81971–00	WIRE, LEAD CABLE CONDUCTOR		1				
3	6G1–81941–10	STARTER RELAY ASSY RELE DE ARRANQUE		1				
4	6G1–81952–00	HOLDER, RELAY SOSTEN DE RELE		1				
5	61T–81945–01	PLATE, SWITCH FITTING PLACA ACCESORIA DE INTERRUP.		1				
6	689–82531–02	WIRE, LEAD CABLE CONDUCTOR		1				
7	664–81970–62	RECTIFIER ASSY RECTIFICADOR COMPLETO		1				
8	97980–05225	SCREW, WITH WASHER TORNILLO, CON ARANDELA		1				
9	97590–06512	BOLT, WITH WASHER PERNO CON ARANDELA		1				
10	682–82150–10	FUSE HOLDER ASSY PORTA-FUSIBLES COMPLETO		1				
11	663–82151–00	.FUSE (12V-20A) .FUSIBLE (12V-20A)		1				
12	689–82540–01	NEUTRAL SWITCH ASSY INTERRUPTOR NEUTRAL COMPL		1				
13	90446–10M02	HOSE TUBO RESEIRADERO		1				
14	689–81870–00	STARTING SWITCH ASSY INTERRUPTOR DE ARRANQUE COMPL.		1				
15	689–82105–14	BATTERY CABLE CABLE DE BATERIA		1				
16	689–82594–00	CLAMP GRAMPA		1				
17	682–42525–00	PLATE, FRICTION PLACA DE FRICCION		1				
18	90161–06M00	SCREW, TAPPING TORNILLO DE CABEZA PLANA		1				

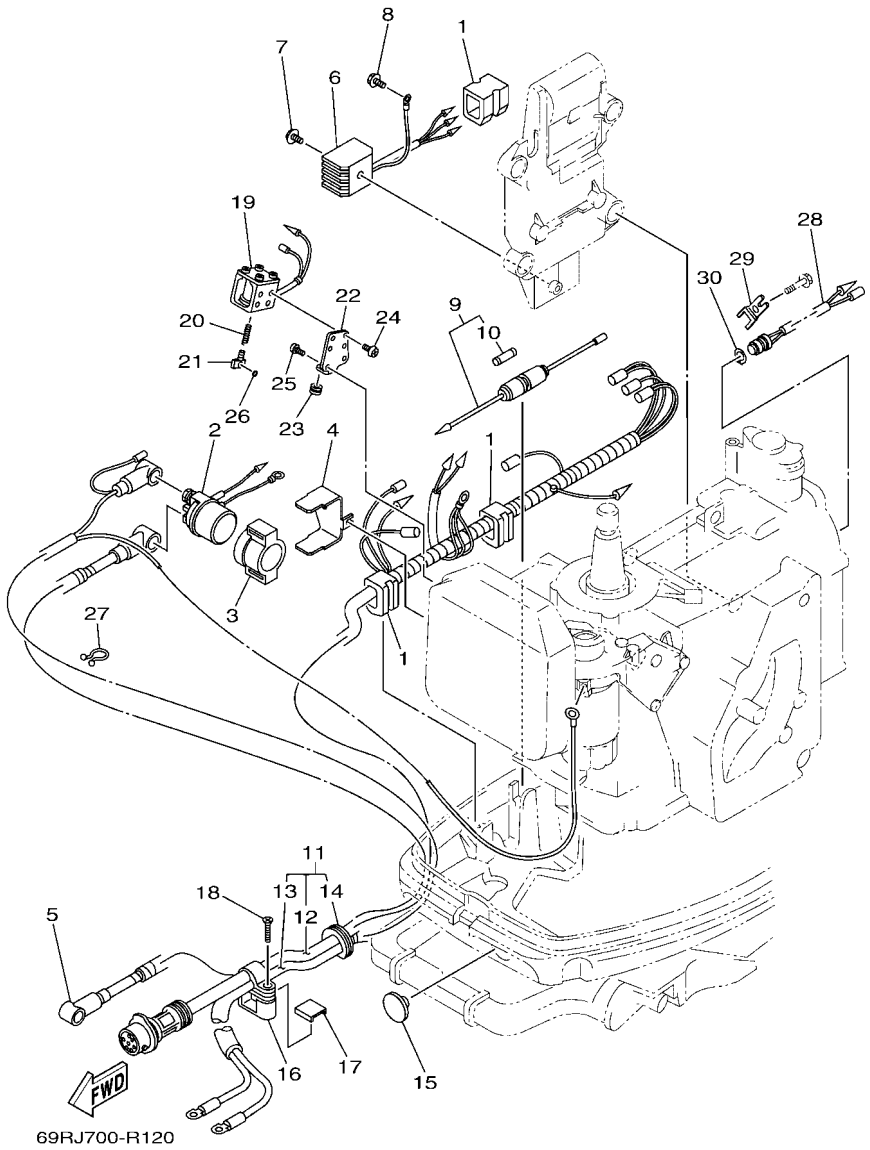

FIG. 12 ELECTRICAL 3 — EQUIPO ELECTRICO 3

REF. NO.	PART NO. CODIGO Nº	DESCRIPTION DESCRIPCION	MH	WH	W	WC		REMARKS OBSERVACIONES
1	90480–17M08	GROMMET TAPON			3			
2	6G1–81941–10	STARTER RELAY ASSY RELE DE ARRANQUE			1			
3	6G1–81952–00	HOLDER, RELAY SOSTEN DE RELE			1			
4	61T–81945–01	PLATE, SWITCH FITTING PLACA ACCESORIA DE INTERRUP.			1			
5	689–82531–02	WIRE, LEAD CABLE CONDUCTOR			1			
6	664–81970–62	RECTIFIER ASSY RECTIFICADOR COMPLETO			1			
7	97980–05225	SCREW, WITH WASHER TORNILLO, CON ARANDELA			1			
8	97590–06512	BOLT, WITH WASHER PERNO CON ARANDELA			1			
9	682–82150–10	FUSE HOLDER ASSY PORTA-FUSIBLES COMPLETO			1			
10	663–82151–00	.FUSE (12V-20A) .FUSIBLE (12V-20A)			1			
11	61T–82580–00	WIRE HARNESS ASSY 2 CONJUNTO DE CABLES 2			1			
12	61T–82590–00	.WIRE HARNESS ASSY .CONJUNTO DE CABLES			1			
13	689–82105–14	.BATTERY CABLE .CABLE DE BATERIA			1			
14	689–42724–50	.GROMMET .TAPON			1			
15	90480–17165	GROMMET TAPON			1			
16	689–82594–10	CLAMP GRAMPA			1			
17	682–42525–00	PLATE, FRICTION PLACA DE FRICCION			1			
18	90161–06M00	SCREW, TAPPING TORNILLO DE CABEZA PLANA			1			
19	61T–86111–00	COIL, SOLENOID CONJUNTO BOBINA SOLENOIDE			1			
20	682–86116–00	WIRE, PULL ALAMBRE-JALADOR			1			
21	682–86117–00	HOOK, WIRE PULL GANCHO JALADOR DE ALAMBRE			1			
22	61T–86112–00	STAY, SOLENOID SOPORTE SOLENOIDE			1			
23	90480–10155	GROMMET TAPON			1			
24	98503–04006	SCREW, PAN HEAD TORNILLO DE CABEZA DE CONO ACH			4			
25	97880–05012	SCREW, PAN HEAD TORNILLO DE CABEZA CON PLANA			2			
26	93210–03261	O-RING ANILLO O			1			
27	90465–18147	CLAMP BRIDA			1			

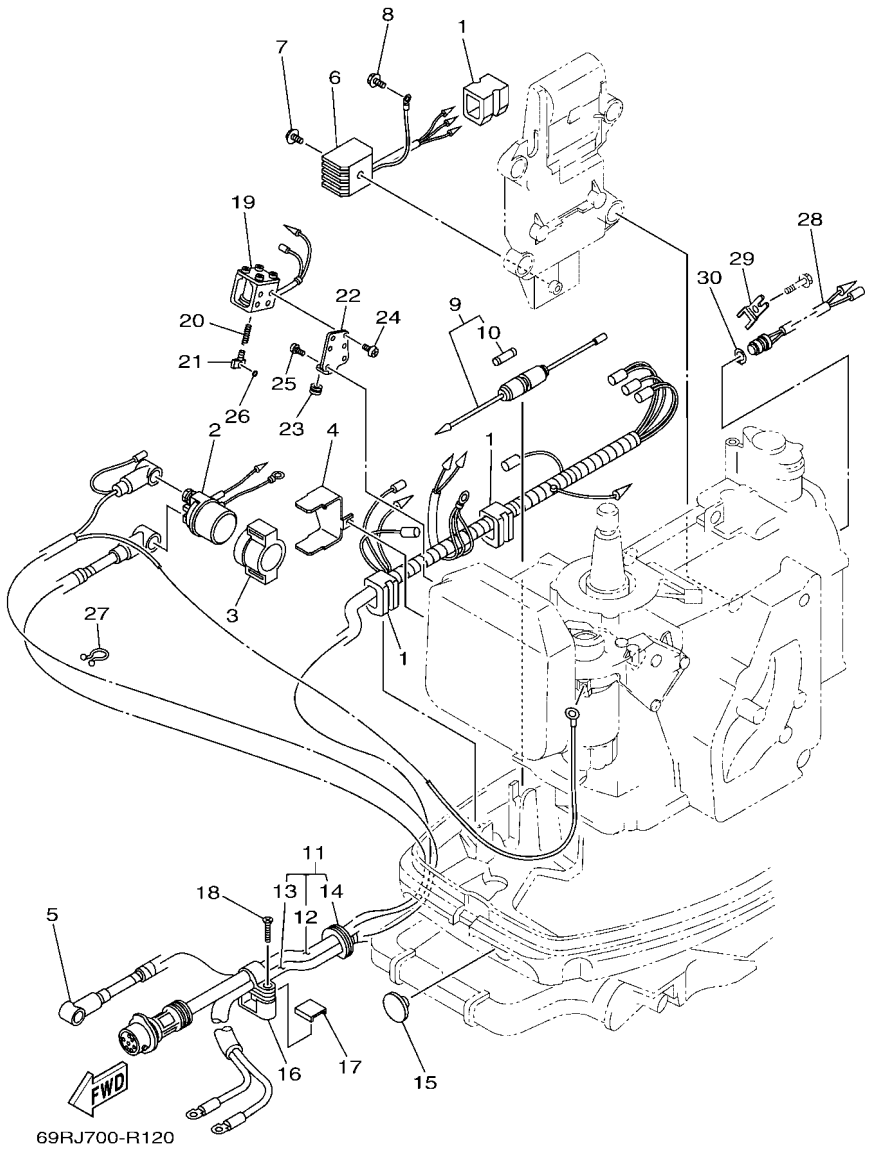

FIG. 12 ELECTRICAL 3 — EQUIPO ELECTRICO 3

REF. NO.	PART NO. CODIGO Nº	DESCRIPTION DESCRIPCION	MH	WH	W	WC		REMARKS OBSERVACIONES
28	61T–82560–00	THERMO SWITCH ASSY INTER. DE TERMO			1			
29	61T–82588–00	PLATE PLACA			1			
30	99009–17500	CIRCLIP PRESILLA REDONDA			1			

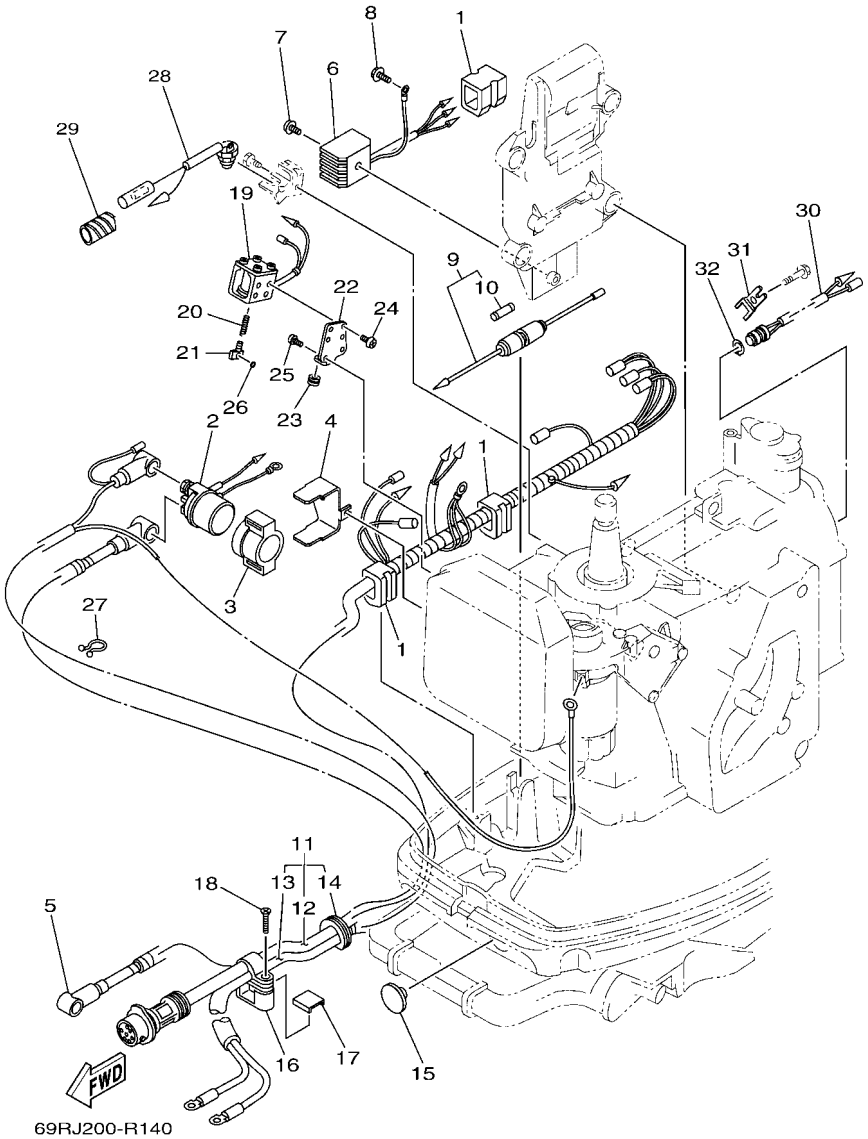

FIG. 13 ELECTRICAL 4 — EQUIPO ELECTRICO 4

REF. NO.	PART NO. CODIGO Nº	DESCRIPTION DESCRIPCION	MH	WH	W	WC		REMARKS OBSERVACIONES
1	90480–17M08	GROMMET TAPON				3		
2	6G1–81941–10	STARTER RELAY ASSY RELE DE ARRANQUE				1		
3	6G1–81952–00	HOLDER, RELAY SOSTEN DE RELE				1		
4	61T–81945–01	PLATE, SWITCH FITTING PLACA ACCESORIA DE INTERRUP.				1		
5	689–82531–02	WIRE, LEAD CABLE CONDUCTOR				1		
6	664–81970–62	RECTIFIER ASSY RECTIFICADOR COMPLETO				1		
7	97980–05225	SCREW, WITH WASHER TORNILLO, CON ARANDELA				1		
8	97590–06512	BOLT, WITH WASHER PERNO CON ARANDELA				1		
9	682–82150–10	FUSE HOLDER ASSY PORTA-FUSIBLES COMPLETO				1		
10	663–82151–00	.FUSE (12V-20A) .FUSIBLE (12V-20A)				1		
11	61T–82580–00	WIRE HARNESS ASSY 2 CONJUNTO DE CABLES 2				1		
12	61T–82590–00	.WIRE HARNESS ASSY .CONJUNTO DE CABLES				1		
13	689–82105–14	.BATTERY CABLE .CABLE DE BATERIA				1		
14	689–42724–50	.GROMMET .TAPON				1		
15	90480–17165	GROMMET TAPON				1		
16	689–82594–10	CLAMP GRAMPA				1		
17	682–42525–00	PLATE, FRICTION PLACA DE FRICCION				1		
18	90161–06M00	SCREW, TAPPING TORNILLO DE CABEZA PLANA				1		
19	61T–86111–00	COIL, SOLENOID CONJUNTO BOBINA SOLENOIDE				1		
20	682–86116–00	WIRE, PULL ALAMBRE-JALADOR				1		
21	682–86117–00	HOOK, WIRE PULL GANCHO JALADOR DE ALAMBRE				1		
22	61T–86112–00	STAY, SOLENOID SOPORTE SOLENOIDE				1		
23	90480–10155	GROMMET TAPON				1		
24	98503–04006	SCREW, PAN HEAD TORNILLO DE CABEZA DE CONO ACH				4		
25	97880–05012	SCREW, PAN HEAD TORNILLO DE CABEZA CON PLANA				2		
26	93210–03261	O-RING ANILLO O				1		
27	90465–18147	CLAMP BRIDA				1		

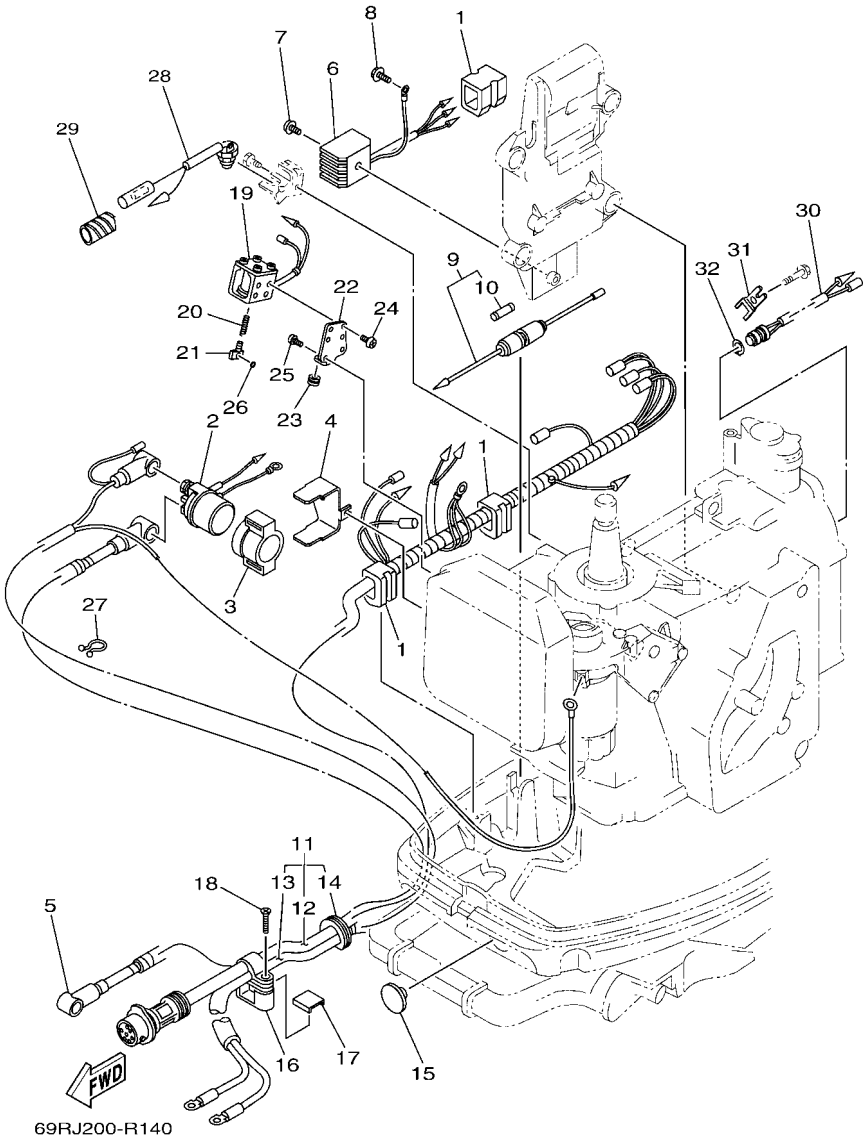

FIG. 13 ELECTRICAL 4 — EQUIPO ELECTRICO 4

REF. NO.	PART NO. CODIGO Nº	DESCRIPTION DESCRIPCION	MH	WH	W	WC		REMARKS OBSERVACIONES
28	689–82540–01	NEUTRAL SWITCH ASSY INTERRUPTOR NEUTRAL COMPL				1		
29	90446–10M02	HOSE TUBO RESEIRADERO				1		
30	61T–82560–00	THERMO SWITCH ASSY INTER. DE TERMO				1		
31	61T–82588–00	PLATE PLACA				1		
32	99009–17500	CIRCLIP PRESILLA REDONDA				1		

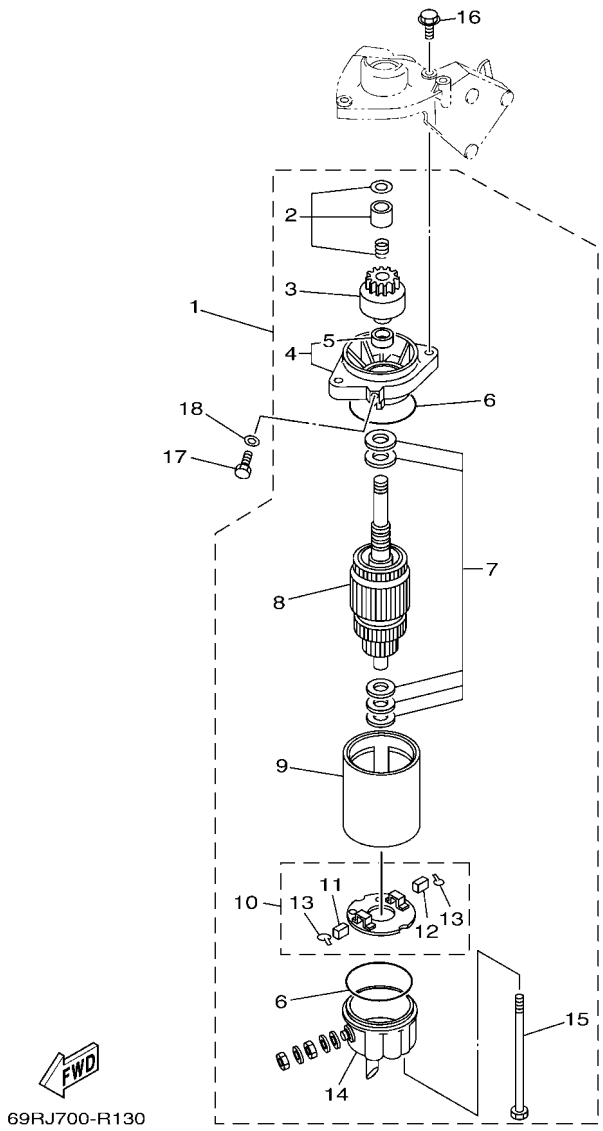

FIG. 14 STARTING MOTOR — MOTOR DE ARRANQUE

REF. NO.	PART NO. CODIGO Nº	DESCRIPTION DESCRIPCION	MH	WH	W	WC		REMARKS OBSERVACIONES
1	689–81800–13	STARTING MOTOR ASSY MOTOR DE ARRANQUE COMPLETO		1	1	1		
2	689–81857–11	.PINION STOPPER SET .JUEGO TAPON PINON		1	1	1		
3	689–81807–12	.GEAR ASSY, STARTING MOTOR .PINON CONJUNTO		1	1	1		
4	689–81830–11	.FRONT BRACKET ASSY .SOPORTE DELANTERO COMPLETO		1	1	1		
5	689–81831–00	..METAL, FRONT ..METAL, DELANTERO		1	1	1		
6	689–81847–11	.O-RING .ANILLO GOMA		2	2	2		
7	689–81809–11	.WASHER KIT .JUEGO DE ARANDELA		1	1	1		
8	689–81850–12	.ARMATURE ASSY .INDUCIDO COMPLETO		1	1	1		
9	689–81810–11	.STATOR ASSY .ESTATOR COMPLETO		1	1	1		
10	689–81840–11	.BRUSH HOLDER ASSY .SOSTEN DE ESCOBILLA COMPLETO		1	1	1		
11	689–81812–11	..BRUSH 2 ..ESCOBILLA 2		1	1	1		
12	689–81811–11	..BRUSH 1 ..ESCOBILLA 1		1	1	1		
13	689–81813–10	..SPRING, BRUSH ..RESORTE DE ESCOBILLA		2	2	2		
14	689–81820–11	.REAR BRACKET ASSY .CUBIERTA TRASERA COMPL		1	1	1		
15	689–81826–10	.BOLT .PERNO		2	2	2		
16	97513–08530	BOLT, WITH WASHER PERNO CON ARANDELA		2	2	2		
17	97013–08012	BOLT PERNO		1	1	1		
18	92903–08600	WASHER, PLATE RONDANA SENCILLA		1	1	1		

FIG. 15 BOTTOM COWLING — CUBIERTA INFERIOR

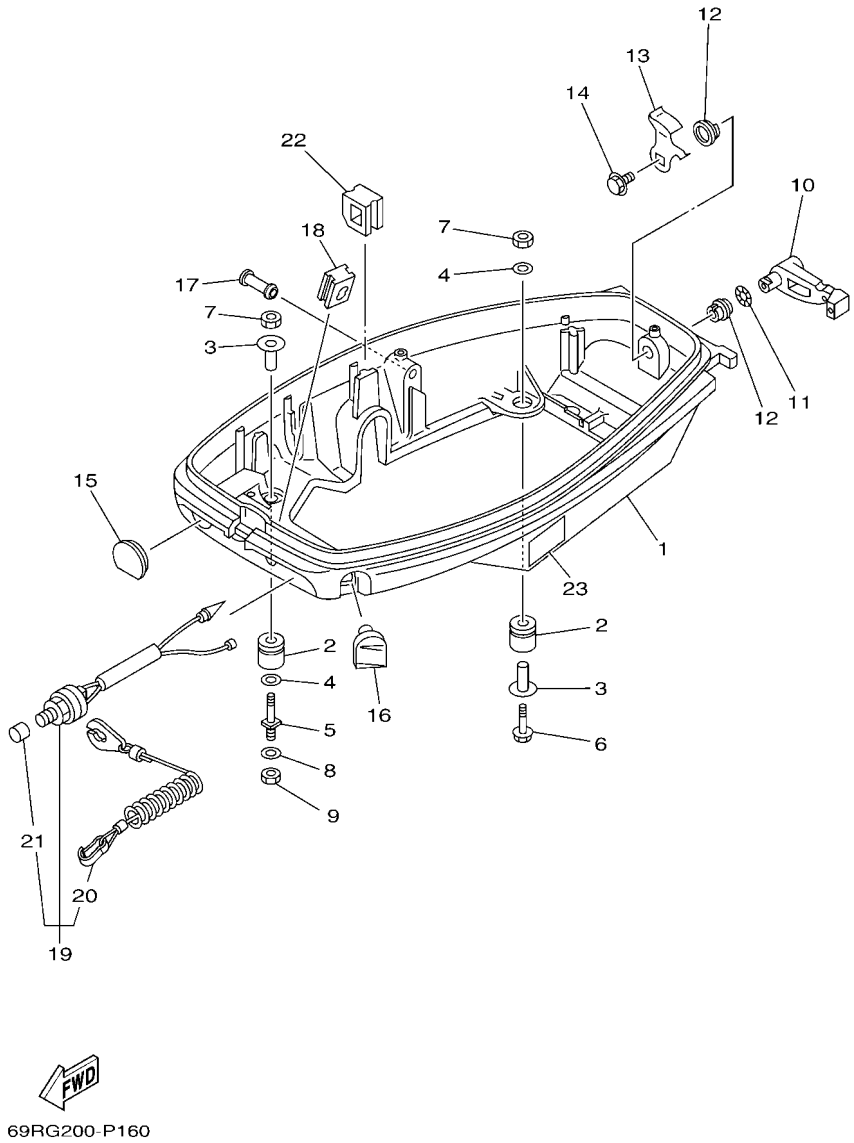

REF. NO.	PART NO. CODIGO Nº	DESCRIPTION DESCRIPCION	MH	WH	W	WC		REMARKS OBSERVACIONES
1	689–42711–05–8D	COWLING, BOTTOM 1 CUBIERTA INFERIOR 1	1	1	1	1		
2	90480–15M06	GROMMET TAPON	4	4	4	4		
3	90387–08M25	COLLAR ESPACIADOR	4	4	4	4		
4	90201–08M87	WASHER, PLATE ARANDELA PLANA	4	4	4	4		
5	6G0–42796–00	BOLT 1 TORNILLO	2	2	2	2		
6	97585–08540	BOLT, WITH WASHER PERNO CON ARANDELA	2	2	2	2		
7	95380–08700	NUT TUERCA	4	4	4	4		
8	92990–08600	WASHER, PLATE ARANDELA PLANA	2	2	2	2		
9	95380–08700	NUT TUERCA	2	2	2	2		
10	689–42815–00	LEVER, CLAMP 1 PALANCA ABRAZADERA 1	1	1	1	1		
11	90206–12052	WASHER, WAVE ARANDELA ONDULADA	1	1	1	1		
12	90386–12069	BUSH BUJE	2	2	2	2		
13	689–42816–00	LEVER, CLAMP 2 PALANCA ABRAZADERA 2	1	1	1	1		
14	90119–06M73	BOLT, WITH WASHER TORNILLO CON ARANDELA	1	1	1	1		
15	682–42724–00	GROMMET TAPON	1					
	61T–42724–40	GROMMET TAPON		1				
16	689–42725–01	GROMMET TAPON	1		1	1		
17	90338–12009	PLUG TAPON	1	1				
18	61N–26326–00	GROMMET TAPON PROTECTOR	1	1		1		
	676–42724–40	GROMMET TAPON			1			
19	6E9–82575–02	ENGINE STOP SWITCH ASSY INTERRUPTOR DE PARADA COMPL	1	1				
20	682–82556–00	.LANYARD, STOP SWITCH .CORDON DE INTERRUPTOR PARADA	1	1				
21	689–8257Y–00	.CAP .TAPA	1	1				
22	90480–17M08	GROMMET TAPON	1					
23	6EE–42794–40	LABEL, WARNING (GENERAL) ETIQUETA DE PRECAUCION	1	1	1	1		

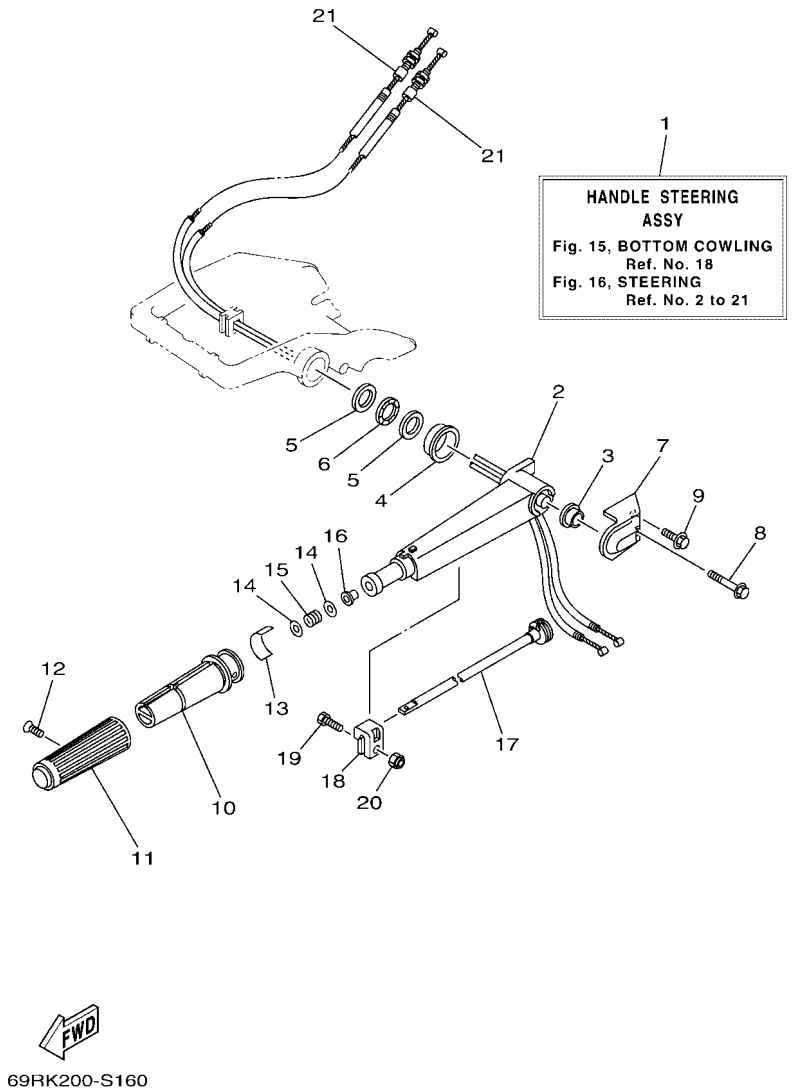

FIG. 16 STEERING — DIRECCION

REF. NO.	PART NO. CODIGO Nº	DESCRIPTION DESCRIPCION	MH	WH	W	WC		REMARKS OBSERVACIONES
1	69P–W0084–01–8D	HANDLE STEERING ASSY CONJUNTO DE MANIJA	1	1		1		
2	689–42111–01–8D	HANDLE, STEERING MANIJA DE DIRECCION	1	1		1		
3	90387–13003	COLLAR ESPACIADOR	1	1		1		
4	90387–33001	COLLAR ESPACIADOR	1	1		1		
5	90201–28013	WASHER, PLATE ARANDELA PLANA	2	2		2		
6	90206–28001	WASHER, WAVE ARANDELA ONDULADA	1	1		1		
7	69P–42112–00–8D	HANDLE, STEERING MANIJA DE DIRRECION	1	1		1		
8	97595–06550	BOLT, WITH WASHER PERNO CON ARANDELA	1	1		1		
9	97595–06520	BOLT, WITH WASHER PERNO CON ARANDELA	1	1		1		
10	664–42119–00	GRIP, STEERING HANDLE MANGO, MANIJA DE DIRRECCION	1	1		1		
11	6G1–42177–00	RUBBER, HANDLE HULE DE MANIJA	1	1		1		
12	90152–05011	SCREW, COUNTERSUNK TORNILLO EMBUTIDO	1	1		1		
13	6G1–42137–20	INDICATOR, THROTTLE INDICADOR ACELERADOR	1	1		1		
14	90201–10M02	WASHER, PLATE ARANDELA PLANA	2	2		2		
15	90501–23215	SPRING, COMPRESSION RESORTE DE COMPRESION	1	1		1		
16	90386–08032	BUSH BUJE	1	1		1		
17	689–42138–00	LEVER, THROTTLE PLANCA DE ACELERACION	1	1		1		
18	656–42126–01	FRICTION, STEERING HANDLE GRIP FRICCION DE MANGO DIRECCION	1	1		1		
19	97095–06020	BOLT PERNO	1	1		1		
20	90185–06062	NUT, SELF-LOCKING TUERCA AUTOBLOCANTE	1	1		1		
21	61N–26311–01	CABLE, THROTTLE 1 CABLE DE ACELERADOR 1	2	2		2		

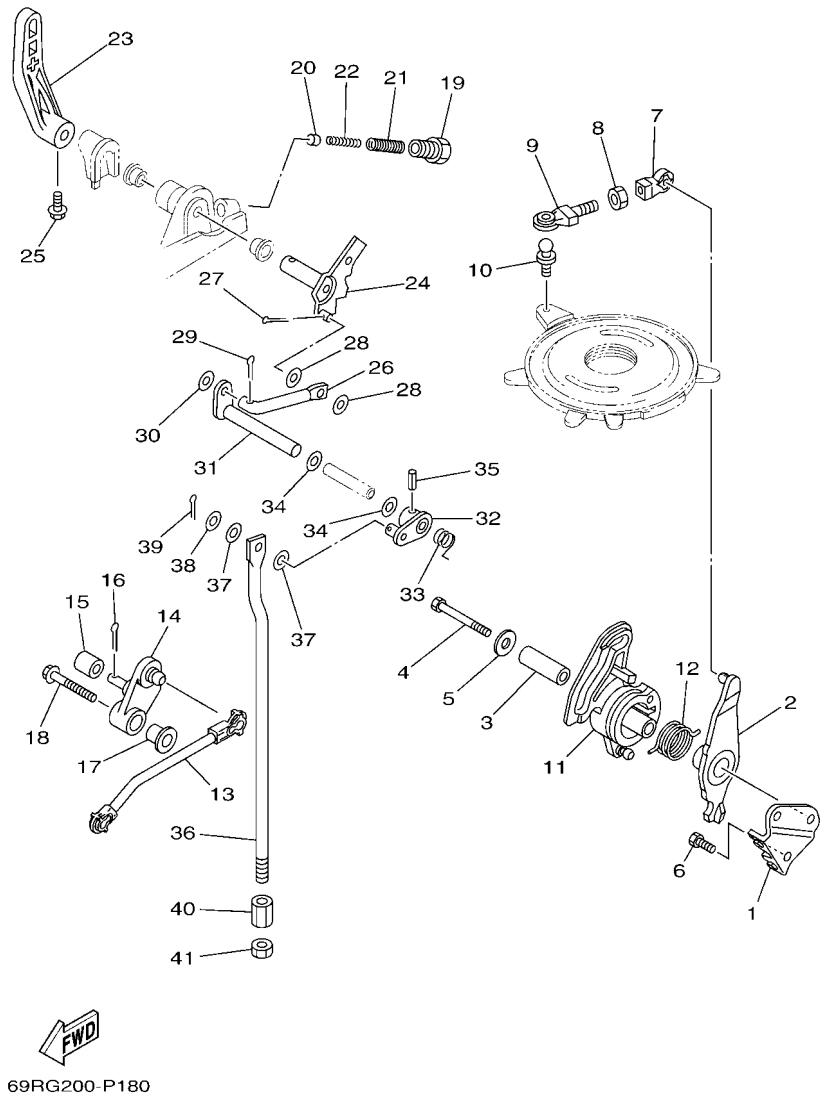

FIG. 17 CONTROL 1

REF. NO.	PART NO. CODIGO Nº	DESCRIPTION DESCRIPCION	MH	WH	W	WC		REMARKS OBSERVACIONES
1	69P–14497–01	STAY, THROTTLE WIRE SOPORTE VALVULA DE OBTURACION	1	1	1	1		
2	69P–41631–10	LEVER, MAGNETO CONTROL PALANCA DE CONTROL DE MAGNETO	1	1	1	1		
3	90387–06M59	COLLAR ESPACIADOR	1	1	1	1		
4	97095–06045	BOLT PERNO	1	1	1	1		
5	90201–06416	WASHER, PLATE ARANDELA PLANA	1	1	1	1		
6	97095–06012	BOLT PERNO	1	1	1	1		
7	662–41237–01	JOINT, LINK CONECTOR	1	1	1	1		
8	95380–05700	NUT TUERCA	1	1	1	1		
9	679–41241–01	ROD, LINK VARILLA	1	1	1	1		
10	663–85518–00	JOINT, BALL CONECTOR	1	1	1	1		
11	69P–41213–10	CAM, ACCEL. LEVA ACELERADOR	1	1	1	1		
12	69P–42167–00	SPRING 1 RESORTE 1	1	1	1	1		
13	69P–41241–00	ROD, LINK VARILLA	1	1	1	1		
14	69P–42154–01	LEVER, THROTTLE CONTROL PALANCA CONTROL ACELERADOR	1	1	1	1		
15	62Y–42171–00	BUSHING BUJE	1	1	1	1		
16	91490–16010	PIN. COTTER CHAVETA	1	1	1	1		
17	90387–06289	COLLAR ESPACIADOR	1	1	1	1		
18	90119–06M17	BOLT, WITH WASHER TORNILLO CON ARANDELA	1	1	1	1		
19	664–42715–00	BUSHING BUJE	1	1	1	1		
20	664–44167–01	PLUNGER, SHIFT CAM EMBOLO DE CAMBIO	1	1	1	1		
21	90501–14M07	SPRING, COMPRESSION RESORTE DE COMPRESION	1	1	1	1		
22	90501–09M08	SPRING, COMPRESSION RESORTE DE COMPRESION	1	1	1	1		
23	689–44111–01–8D	HANDLE, GEAR SHIFT MANIJA DE CAMBIO DE MARCHAS	1	1	1	1		
24	664–44113–01	CAM PLATE, HANDLE PLACA DE LA LEVA DEL MANGO	1	1	1	1		
25	90105–06M07	BOLT, FLANGE TORNILLO	1	1	1	1		
26	664–44142–00	JOINT CONECTOR	1	1	1	1		
27	91490–16010	PIN. COTTER CHAVETA	1	1	1	1		

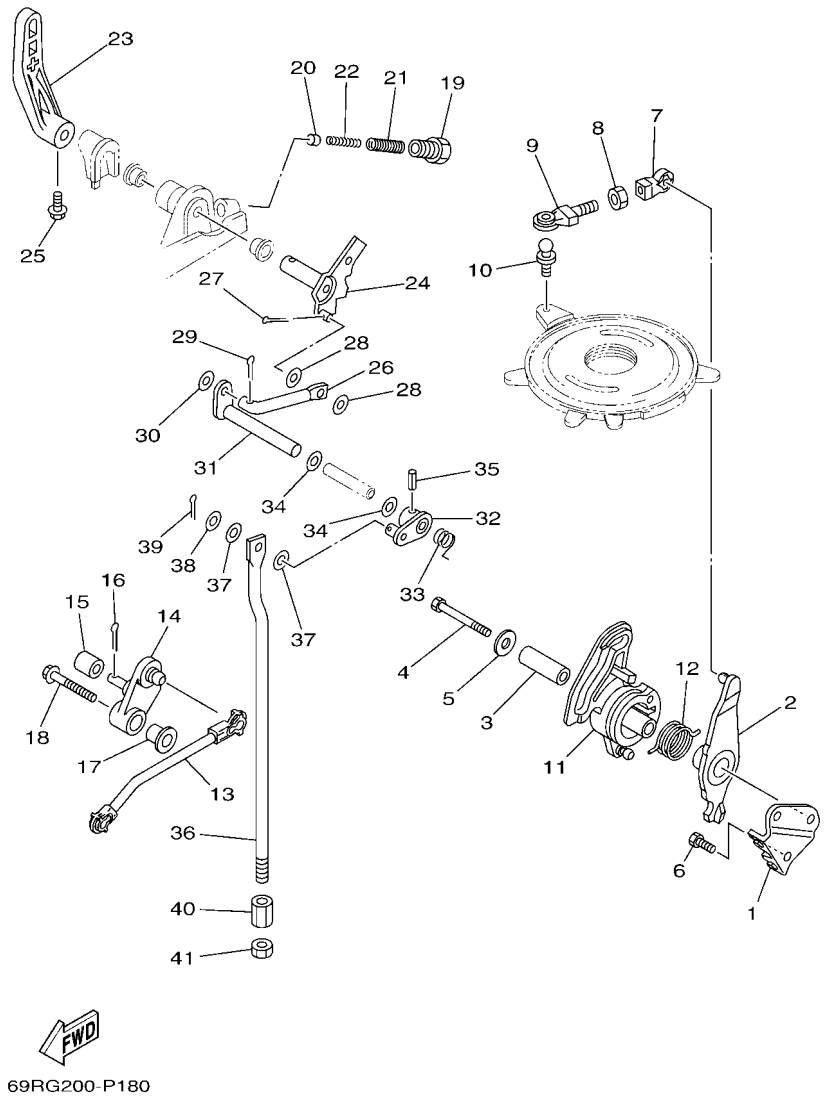

FIG. 17 CONTROL 1

REF. NO.	PART NO. CODIGO Nº	DESCRIPTION DESCRIPCION	MH	WH	W	WC		REMARKS OBSERVACIONES
28	90202–06007	WASHER, PLATE ARANDELA DE PLANA	2	2	2	2		
29	91490–12010	PIN. COTTER CHAVETA	1	1	1	1		
30	92990–05600	WASHER, PLATE ARANDELA PLANA	1	1	1	1		
31	689–44121–01	LEVER, SHIFT ROD PALANCA VARILLA CAMBIOS	1	1	1	1		
32	689–44125–00	LEVER, SHIFT ROD PALANCA VARILLA CAMBIOS	1	1	1	1		
33	90508–14M13	SPRING, TORSION RESORTE DE TORSION	1	1	1	1		
34	90202–10024	WASHER, PLATE ARANDELA DE PLANA	2	2	2	2		
35	91690–40016	PIN, SPRING PASADOR DE RESORTE	1	1	1	1		
36	69S–44143–00	ROD, SHIFT 1 VARILLA DE CAMBIO 1	1	1	1	1		
37	90202–06007	WASHER, PLATE ARANDELA DE PLANA	2	2	2	2		
38	92990–05600	WASHER, PLATE ARANDELA PLANA	1	1	1	1		
39	91490–20010	PIN. COTTER CHAVETA	1	1	1	1		
40	61N–44146–00	CONNECTOR, SHIFT ROD 2 CONECTOR VARILLA DE CAMBIO 2	1	1	1	1		
41	95380–06600	NUT, HEXAGON TUERCA	1	1	1	1		

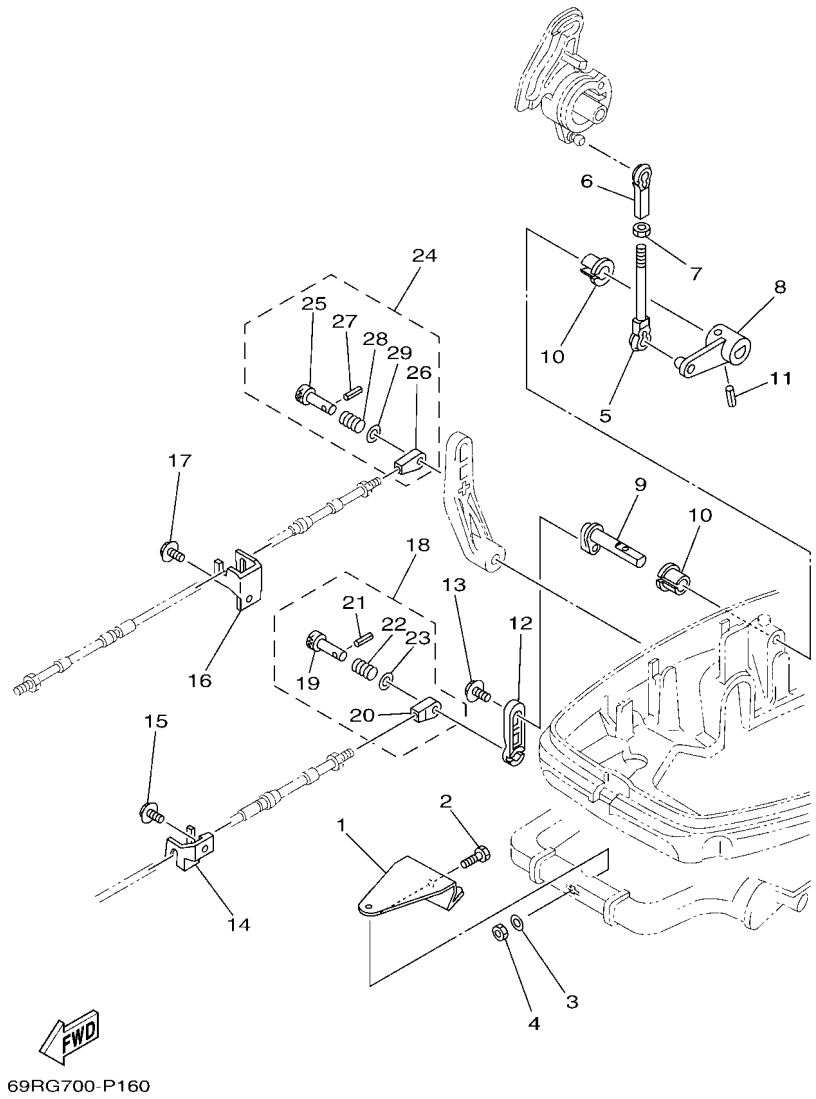

FIG. 18 CONTROL 2

CONTROL 2

REF. NO.	PART NO. CODIGO Nº	DESCRIPTION DESCRIPCION	MH	WH	W	WC		REMARKS OBSERVACIONES
1	689–48511–02	HOOK, STEERING GANCHO DIRECCION			1	1		
2	97075–10040	BOLT PERNO			1	1		
3	92995–10600	WASHER ARANDELA			1	1		
4	90185–10027	NUT, SELF-LOCKING TUERCA AUTOBLOCANTE			1	1		
5	682–41238–01	JOINT, LINK CONECTOR			1	1		
6	682–41237–00	JOINT, LINK CONECTOR			1	1		
7	95380–05600	NUT TUERCA			1	1		
8	69S–42157–10	LEVER, THROTTLE PALANCA DE ACELERADOR			1	1		
9	656–42153–10–8D	SHAFT, THROTTLE CONTROL EJE CONTROL DEL ACELERADOR			1	1		
10	90386–10009	BUSH BUJE			2	2		
11	91690–40018	PIN, SPRING PASADOR DE RESORTE			1	1		
12	648–48534–50–8D	THROTTLE LEVER, CONTROL PALANCA DE CONTROL DE ACELERAC			1	1		
13	97595–06512	BOLT, WITH WASHER PERNO CON ARANDELA			1	1		
14	689–48532–51	BRACKET, REMOTE CONTROL 2 SOPORTE DE CONTROL REMOTO			1	1		
15	97595–06516	BOLT, WITH WASHER PERNO CON ARANDELA			1	1		
16	689–48531–51	BRACKET, REMOTE CONTROL 1 SOPORTE DE CONTROL REMOTO			1	1		
17	97595–06516	BOLT, WITH WASHER PERNO CON ARANDELA			1	1		
18	648–48340–50	CABLE END ASSY TERMINAL DE CABLE COMPL.			1	1		
19	617–48361–91	.HOOK, CABLE .GANCHO CABLE			1	1		
20	617–48346–90	.CABLE END, REMOTE CONTROL .TERMINAL CABLE DE CONTROL REMO			1	1		
21	91690–30012	.PIN, SPRING .PASADOR DE RESORTE			1	1		
22	90501–10264	.SPRING, COMPRESSION .RESORTE DE COMPRESION			1	1		
23	92990–08600	.WASHER, PLATE .ARANDELA PLANA			1	1		
24	648–48330–50	CABLE END ASSY TERMINAL DE CABLE COMPL.			1	1		
25	617–48331–91	.HOOK, CABLE .GANCHO CABLE			1	1		
26	648–48346–50	.CABLE END, REMOTE CONTROL .TERMINAL CABLE DE CONTROL REMO			1	1		
27	91690–30012	.PIN, SPRING .PASADOR DE RESORTE			1	1		

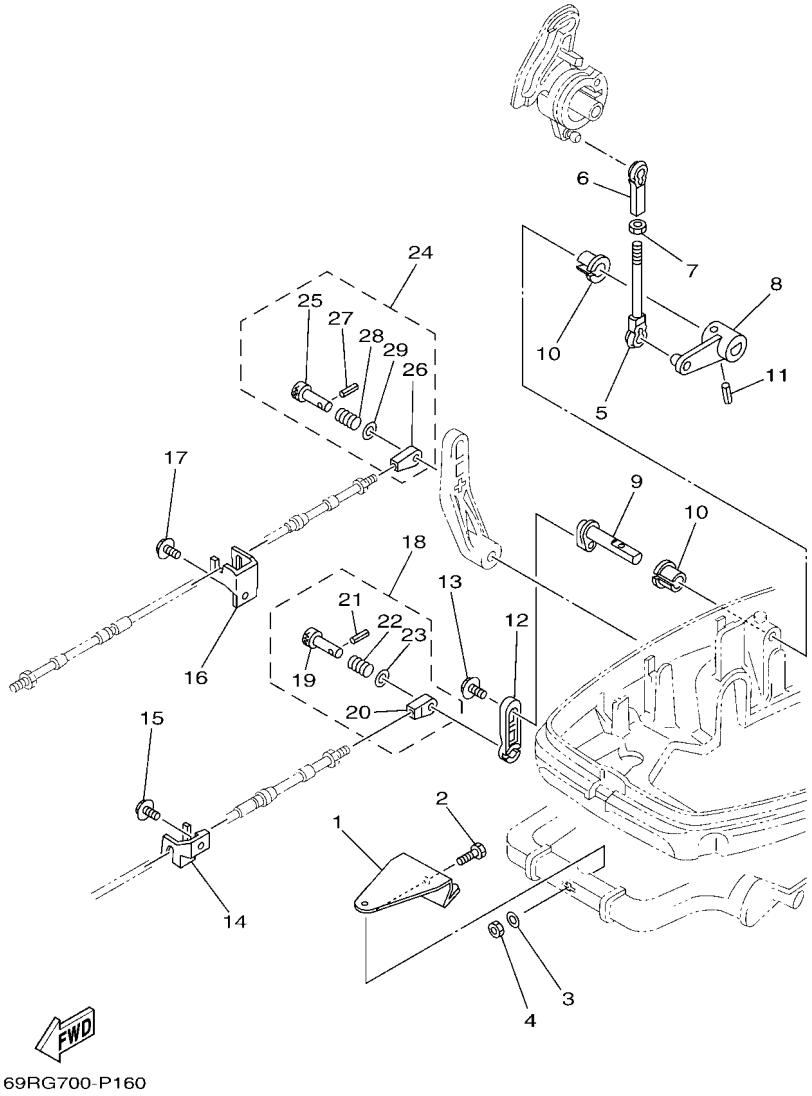

FIG. 18 CONTROL 2

CONTROL 2

REF. NO.	PART NO. CODIGO Nº	DESCRIPTION DESCRIPCION	MH	WH	W	WC		REMARKS OBSERVACIONES
28	90501–10071	.SPRING, COMPRESSION .RESORTE DE COMPRESION			1	1		
29	92990–08600	.WASHER, PLATE .ARANDELA PLANA			1	1		

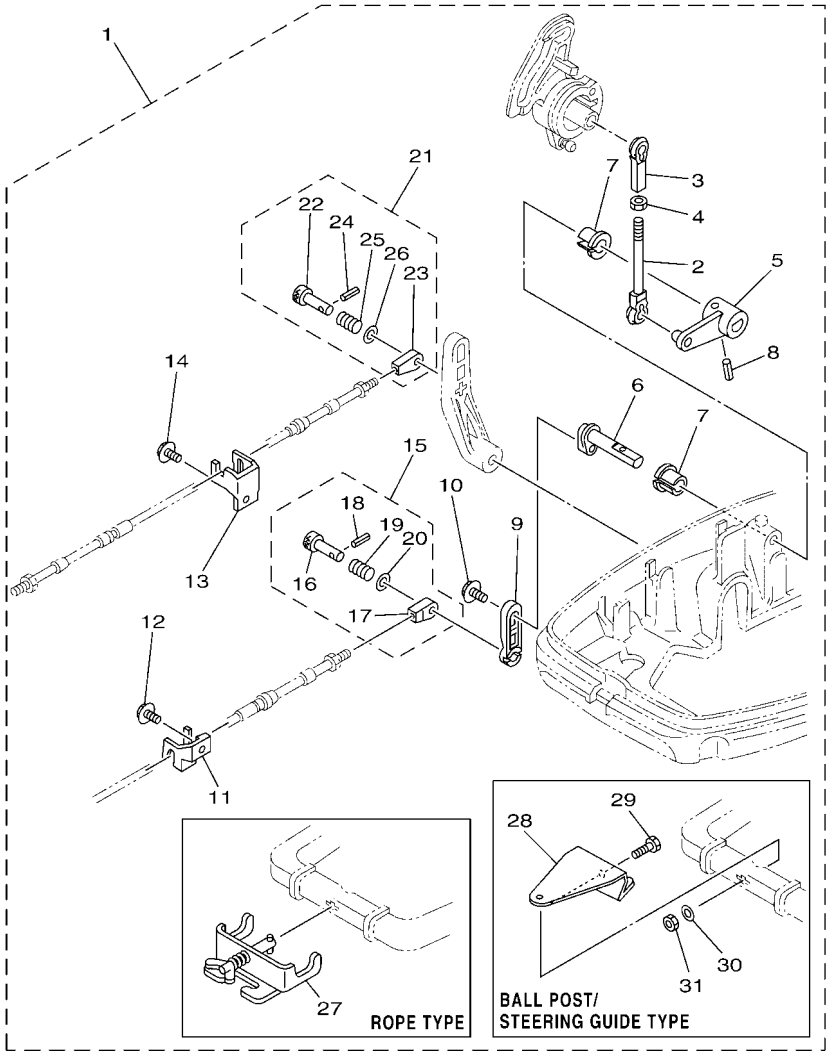

69RG700-P170

FIG. 19 REMO CON ATTACHMENT — CONJUNTO ADITAMENTO

REF. NO.	PART NO. CODIGO Nº	DESCRIPTION DESCRIPCION	MH	WH	W	WC		REMARKS OBSERVACIONES
1	69R–48501–10	REMOTE CONT. ATTACHMENT ASSY. CONJUNTO ADITAMENTO	1	1				AP ROPE TYPE AP ROPE TYPE
	69R–48501–00	REMOTE CONT. ATTACHMENT ASSY. CONJUNTO ADITAMENTO	1	1				AP AP
2	682–41238–01	.JOINT, LINK .CONECTOR	1	1				
3	682–41237–00	.JOINT, LINK .CONECTOR	1	1				
4	95380–05600	.NUT .TUERCA	1	1				
5	69S–42157–10	.LEVER, THROTTLE .PALANCA DE ACELERADOR	1	1				
6	656–42153–10–8D	.SHAFT, THROTTLE CONTROL .EJE CONTROL DEL ACELERADOR	1	1				
7	90386–10009	.BUSH .BUJE	2	2				
8	91690–40018	.PIN, SPRING .PASADOR DE RESORTE	1	1				
9	648–48534–50–8D	.THROTTLE LEVER, CONTROL .PALANCA DE CONTROL DE ACELERAC	1	1				
10	97595–06512	.BOLT, WITH WASHER .PERNO CON ARANDELA	1	1				
11	689–48532–51	.BRACKET, REMOTE CONTROL 2 .SOPORTE DE CONTROL REMOTO	1	1				
12	97595–06516	.BOLT, WITH WASHER .PERNO CON ARANDELA	1	1				
13	689–48531–51	.BRACKET, REMOTE CONTROL 1 .SOPORTE DE CONTROL REMOTO	1	1				
14	97595–06516	.BOLT, WITH WASHER .PERNO CON ARANDELA	1	1				
15	648–48340–50	.CABLE END ASSY .TERMINAL DE CABLE COMPL.	1	1				
16	617–48361–91	..HOOK, CABLE ..GANCHO CABLE	1	1				
17	617–48346–90	..CABLE END, REMOTE CONTROL ..TERMINAL CABLE DE CONTROL REMO	1	1				
18	91690–30012	..PIN, SPRING ..PASADOR DE RESORTE	1	1				
19	90501–10264	..SPRING, COMPRESSION ..RESORTE DE COMPRESION	1	1				
20	92990–08600	..WASHER, PLATE ..ARANDELA PLANA	1	1				
21	648–48330–50	.CABLE END ASSY .TERMINAL DE CABLE COMPL.	1	1				
22	617–48331–91	..HOOK, CABLE ..GANCHO CABLE	1	1				
23	648–48346–50	..CABLE END, REMOTE CONTROL ..TERMINAL CABLE DE CONTROL REMO	1	1				
24	91690–30012	..PIN, SPRING ..PASADOR DE RESORTE	1	1				
25	90501–10071	..SPRING, COMPRESSION ..RESORTE DE COMPRESION	1	1				
26	92990–08600	..WASHER, PLATE ..ARANDELA PLANA	1	1				

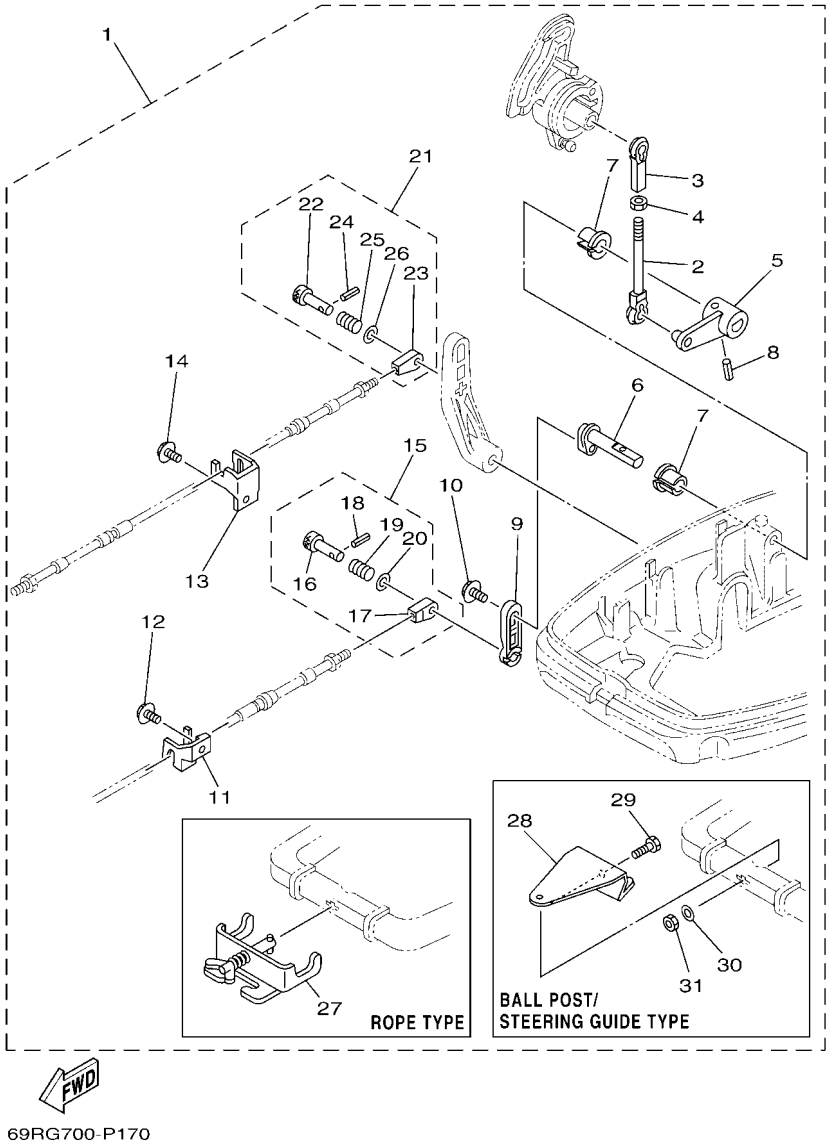

FIG. 19 REMO CON ATTACHMENT — CONJUNTO ADITAMENTO

REF. NO.	PART NO. CODIGO Nº	DESCRIPTION DESCRIPCION	MH	WH	W	WC		REMARKS OBSERVACIONES
27	700–48510–12	.STEERING HOOK ASSY .GANCHO DE DIRECCION COMPL	1	1				ROPE TYPE ROPE TYPE
28	689–48511–02	.HOOK, STEERING .GANCHO DIRECCION	1	1				
29	97075–10040	.BOLT .PERNO	1	1				
30	92995–10600	.WASHER .ARANDELA	1	1				
31	90185–10027	.NUT, SELF-LOCKING .TUERCA AUTOBLOCANTE	1	1				

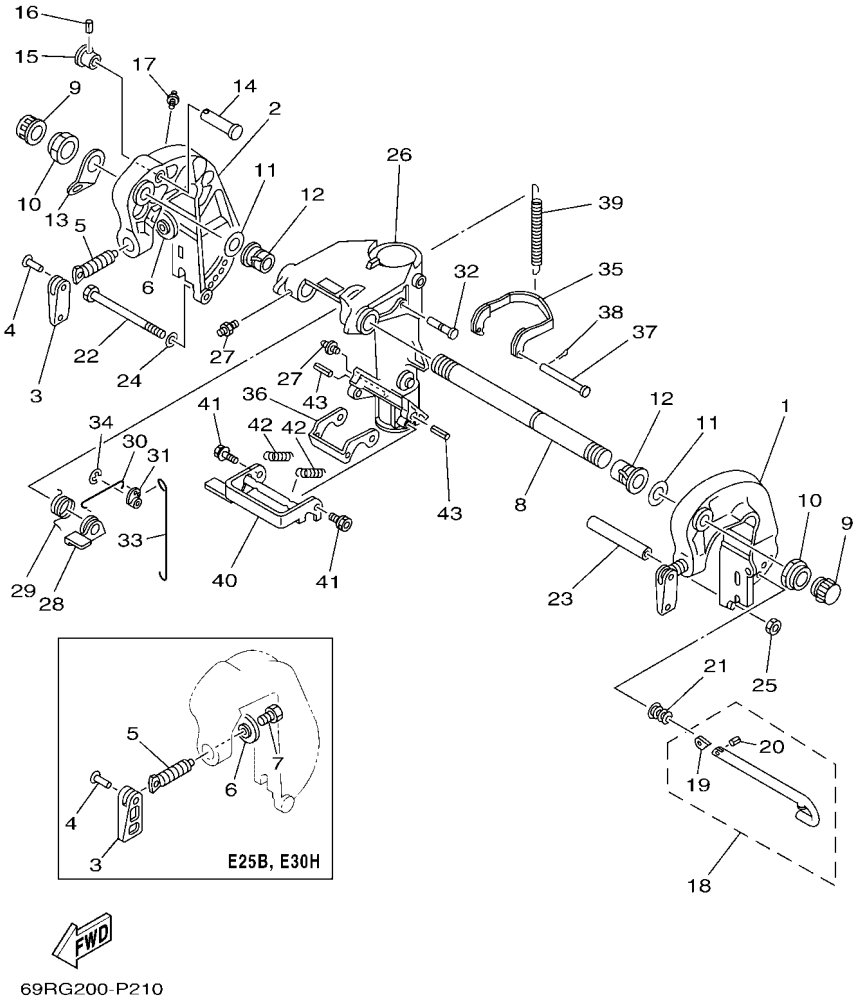

FIG. 20 BRACKET 1 — SOPORTE 1

REF. NO.	PART NO. CODIGO Nº	DESCRIPTION DESCRIPCION	MH	WH	W	WC		REMARKS OBSERVACIONES
1	689–43111–03–8D	BRACKET, CLAMP 1 SOPORTE DE LA ABRAZADERA 1	1	1	1	1		
2	689–43112–02–8D	BRACKET, CLAMP 2 SOPORTE DE LA ABRAZADERA 2	1	1	1	1		
3	6E0–43118–01	HANDLE, TRANSOM CLAMP MANIJA DE LA ABRAZADERA DEL ES	2	2	2	2		25B,30H 25B,30H
	663–43118–01–8D	HANDLE, TRANSOM CLAMP MANIJA DE LA ABRAZADERA DEL ES	2					E25B,E30H E25B,E30H
4	90243–04M01	PIN PASADOR	2	2	2	2		25B,30H 25B,30H
	90243–04007	PIN PASADOR	2					E25B,E30H E25B,E30H
5	90149–14030	SCREW TORNILLO DE REGLAJE	2	2	2	2		25B,30H 25B,30H
	6G0–43116–00	SCREW, TRANSOM CLAMP TORNILLO DE ABRAZADERA	2					E25B,E30H E25B,E30H
6	648–43114–01	PAD, TRANSOM CLAMP ARANDELA DE ABRAZADERA	2	2	2	2		25B,30H 25B,30H
	6F5–43114–00	PAD, TRANSOM CLAMP ARANDELA DE ABRAZADERA	2					E25B,E30H E25B,E30H
7	90109–06M12	BOLT PERNO	2					E25B,E30H E25B,E30H
8	6J8–43131–01	BOLT, CLAMP BRACKET TORNILLO DE ABRAZADERA DEL SOP	1	1	1	1		
9	6G5–43145–01	CAP, CLAMP BRACKET TAPA	2	2	2	2		
10	90185–22043	NUT, SELF-LOCKING TUERCA AUTOBLOCANTE	2	2	2	2		
11	90201–22M03	WASHER, PLATE ARANDELA PLANA	2	2	2	2		
12	90386–22M67	BUSH BUJE	2	2	2	2		
13	6J8–43113–01	PLATE, CLAMP BRACKET PLACA ABRAZADERA SOPORTE	1	1	1	1		
14	689–43191–00	SHAFT, STOPPER EJE DE TOPE	1	1	1	1		
15	689–43192–01	KNOB, STOPPER PERILLA DE TOPE	1	1	1	1		
16	91690–30016	PIN, SPRING PASADOR DE RESORTE	1	1	1	1		
17	93700–06M03	NIPPLE, GREASE BOQUILLA DE ENGRASAR	1	1	1	1		
18	689–43160–00	TILT ROD ASSY VARILLA DE BASCULACION COMPL.	1	1	1	1		
19	689–43165–00	.PLATE, TILT LOCK .PLACA DE TOPE, VARILLA SEGURID	1	1	1	1		
20	91690–30008	.PIN, SPRING .PASADOR DE RESORTE	1	1	1	1		
21	90502–10M07	SPRING, CONICAL RESORTE CONICO	1	1	1	1		
22	90101–08339	BOLT TORNILLO	1	1	1	1		
23	90387–09019	COLLAR ESPACIADOR	1	1	1	1		

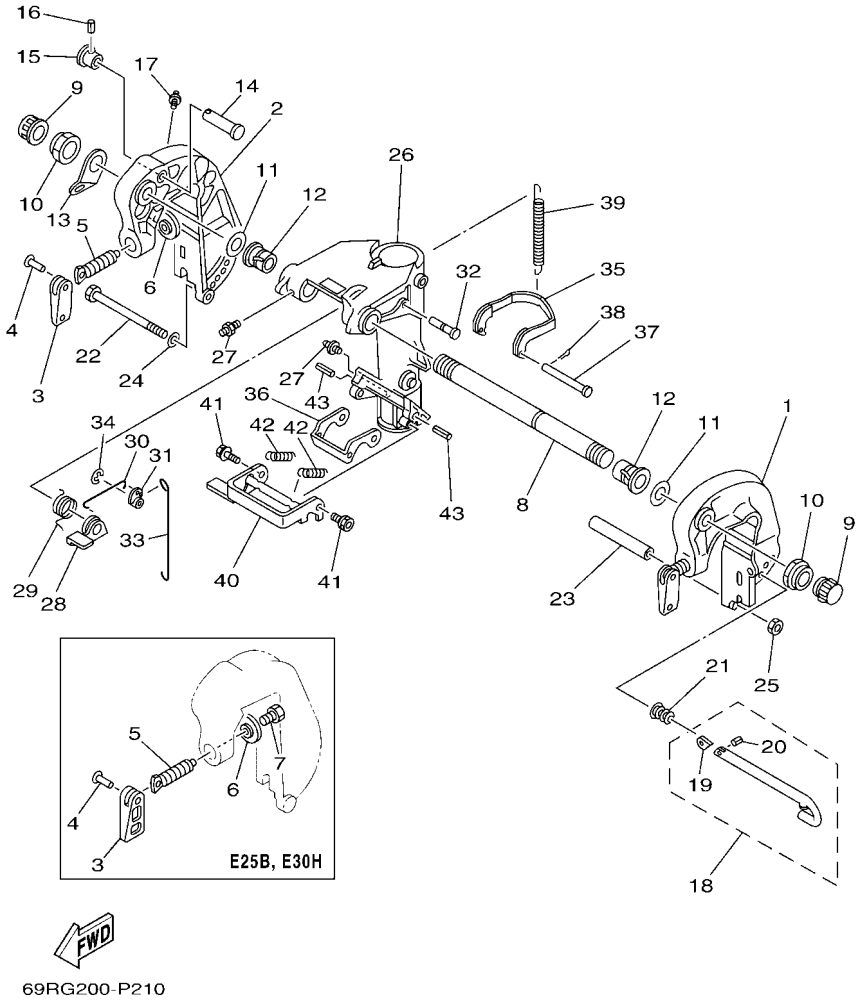

FIG. 20 BRACKET 1 — SOPORTE 1

REF. NO.	PART NO. CODIGO Nº	DESCRIPTION DESCRIPCION	MH	WH	W	WC		REMARKS OBSERVACIONES
24	92990–08600	WASHER, PLATE ARANDELA PLANA	1	1	1	1		
25	95380–08600	NUT TUERCA	1	1	1	1		
26	689–43311–03–8D	BRACKET, SWIVEL 1 SOPORTE GIRATORIO 1	1	1	1	1		
27	93700–06M03	NIPPLE, GREASE BOQUILLA DE ENGRASAR	3	3	3	3		
28	689–43631–10	LEVER, TILT PALANCA DE INCLINACION	1	1	1	1		
29	689–43643–00	SPRING RESORTE	1	1	1	1		
30	689–43616–00	ROD, TILT LOCK VARILLA SEGURO DE INCLINACION	1	1	1	1		
31	648–43642–00	LEVER, TILT 1 PALANCA DE INCLINACION1	1	1	1	1		
32	90249–06M22	PIN PASADOR	1	1	1	1		
33	648–43617–00	ROD, TILT LOCK VARILLA SEGURO DE INCLINACION	1	1	1	1		
34	99080–05600	CIRCLIP PRESILLA REDONDA	1	1	1	1		
35	689–43614–01	PLATE, TILT LOCK PLACA DE SEGURO DE INCLINACION	1	1	1	1		
36	648–43615–00	PLATE, TILT LOCK PLACA DE SEGURO DE INCLINACION	1	1	1	1		
37	90240–05047	PIN, CLEVIS PASADOR CON HOYO	1	1	1	1		
38	91490–16010	PIN. COTTER CHAVETA	1	1	1	1		
39	90506–30M27	SPRING, TENSION RESORTE DE TENSION	1	1	1	1		
40	689–43681–10	LEVER, SHALLOW WATER DRIVE 1 PALANCA 1	1	1	1	1		EXCEPT 30HW-RUS EXCEPT 30HW-RUS
41	90109–06M18	BOLT PERNO	2	2	2	2		EXCEPT 30HW-RUS EXCEPT 30HW-RUS
42	90506–16M17	SPRING, TENSION RESORTE DE TENSION	2	2	2	2		EXCEPT 30HW-RUS EXCEPT 30HW-RUS
43	91690–40035	PIN, SPRING PASADOR DE RESORTE	2	2	2	2		EXCEPT 30HW-RUS EXCEPT 30HW-RUS

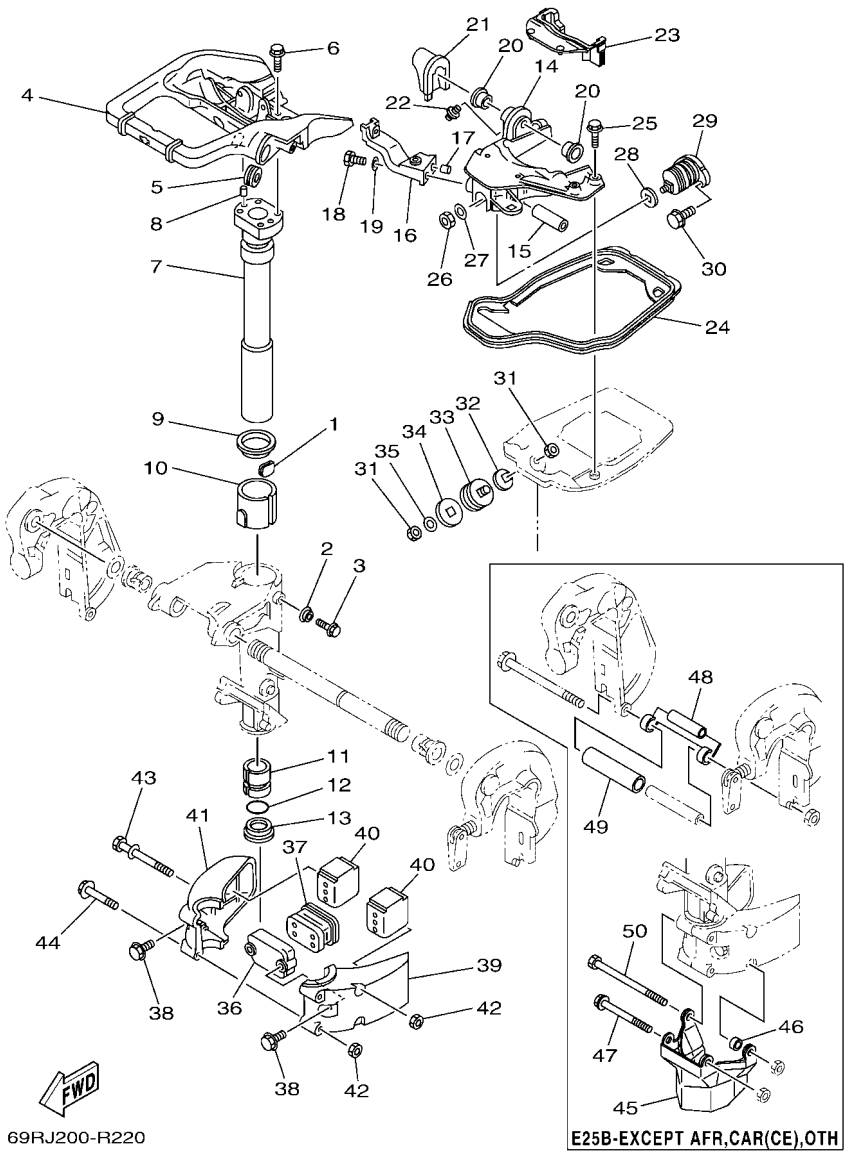

69RJ200-R220

*1:E25B-EXCEPT AFRICA, CARIB CE, SOUTH EAST ASIA

FIG. 21 BRACKET 2 SOPORTE 2

REF. NO.	PART NO. CODIGO Nº	DESCRIPTION DESCRIPCION	MH	WH	W	WC		REMARKS OBSERVACIONES
1	648–42528–00	PLATE, FRICTION PIEZA DE FRICCION	1	1	1	1		
2	689–43373–01	SEAL, DAMPER SELLO DE GOMA	1	1	1	1		
3	90105–06M18	BOLT, FLANGE TORNILLO	1	1	1	1		
4	69P–42511–00–8D	BRACKET, STEERING SOPORTE DE DIRECCION	1	1	1	1		
5	90480–29045	GROMMET TAPON	1	1		1		
6	90105–06M07	BOLT, FLANGE TORNILLO	4	4	4	4		
7	689–42521–00–94	SHAFT, STEERING PIVOT EJE PIVOTE DE DIRECCION	1	1	1	1		
8	93608–12063	PIN, DOWEL PASADOR DE CLAVIJA	2	2	2	2		
9	90209–47016	WASHER ARANDELA DE SEPARACION	1	1	1	1		
10	90386–47M22	BUSH BUJE	1	1	1	1		
11	90386–38090	BUSH BUJE	1	1	1	1		
12	93210–37160	O-RING ANILLO O	1	1	1	1		
13	90386–38022	BUSH BUJE	1	1	1	1		
14	69P–44518–00–CA	BRACKET COMP. SOPORTE	1	1	1	1		
15	90387–10M39	COLLAR ESPACIADOR	1	1	1	1		
16	648–44519–00	BRACKET SOPORTE	1	1	1	1		
17	93606–12019	PIN, DOWEL PASADOR DE CLAVIJA	1	1	1	1		
18	97095–06018	BOLT PERNO	1	1	1	1		
19	92995–06600	WASHER ARANDELA	1	1	1	1		
20	90381–12M01	BUSH, SOLID BUJE SOLIDO	2	2	2	2		
21	689–42718–00	RUBBER, SEAL 3 GOMA	1	1	1	1		
22	93700–06M03	NIPPLE, GREASE BOQUILLA DE ENGRASAR	1	1	1	1		
23	69P–42717–00	RUBBER, SEAL 2 GOMA	1	1	1	1		
24	69P–42716–00	RUBBER SEAL 1 SELLO DE GOMA 1	1	1	1	1		
25	90105–06M08	BOLT, FLANGE TORNILLO	4	4	4	4		
26	90170–10M42	NUT TUERCA	1	1	1	1		
27	92990–10200	WASHER, PLAIN ARANDELA PLANA	1	1	1	1		

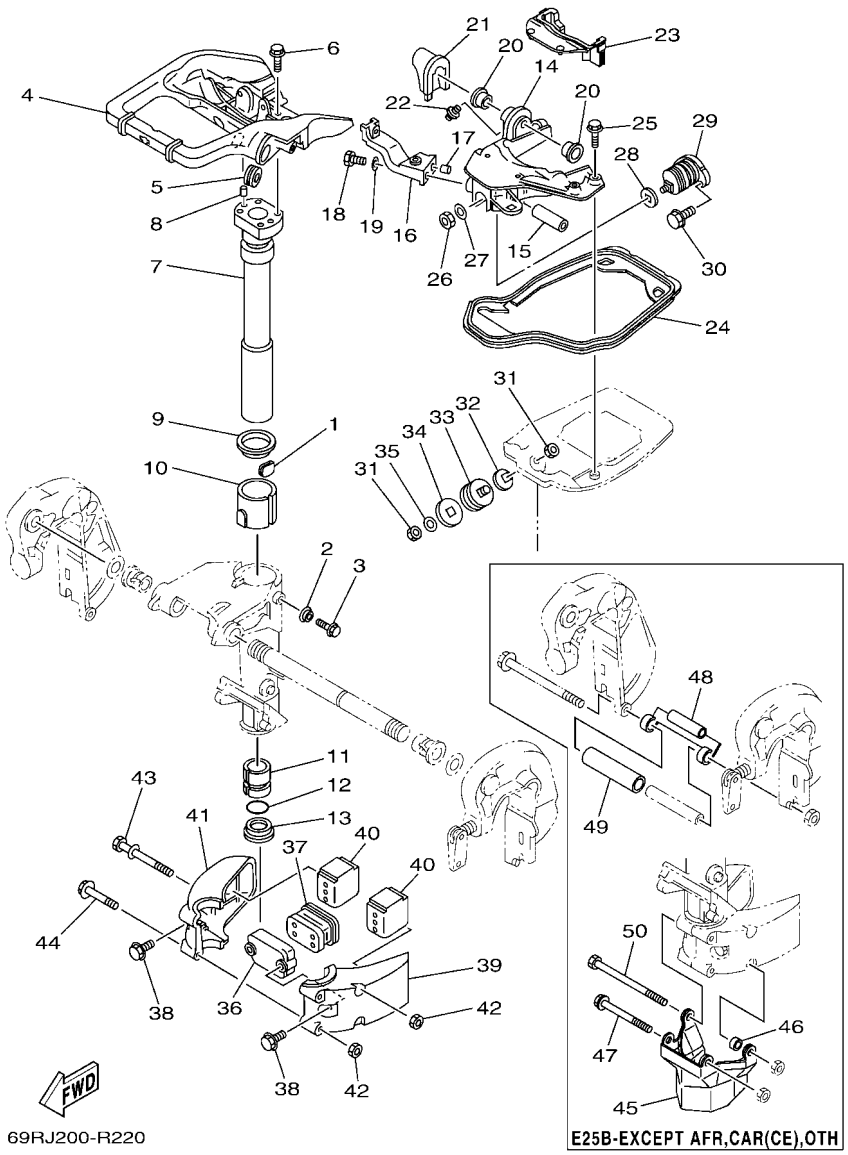

69RJ200-R220

*1:E25B-EXCEPT AFRICA, CARIB CE, SOUTH EAST ASIA

FIG. 21 BRACKET 2 SOPORTE 2

REF. NO.	PART NO. CODIGO Nº	DESCRIPTION DESCRIPCION	MH	WH	W	WC		REMARKS OBSERVACIONES
28	648–44591–A0	GASKET EMPAQUE, AMORTIGUADOR	1	1	1	1		
29	689–44516–00	MOUNT DAMPER, UPPER FRONT AMORTIGUADOR DE HULE FRENTE SU	1	1	1	1		
30	97595–06520	BOLT, WITH WASHER PERNO CON ARANDELA	2	2	2	2		
31	90170–10M42	NUT TUERCA	4	4	4	4		
32	648–44591–A0	GASKET EMPAQUE, AMORTIGUADOR	2	2	2	2		
33	664–44514–00	MOUNT DAMPER, UPPER SIDE AMORTIGUADOR LADO SUPERIOR	2	2	2	2		
34	664–44591–A0	GASKET EMPAQUE, AMORTIGUADOR	2	2	2	2		
35	92990–10200	WASHER, PLAIN ARANDELA PLANA	2	2	2	2		
36	689–44553–00	COVER, LOWER MOUNT CUBIERTA,AMORTIGUADOR INFERIOR	1	1	1	1		
37	689–44557–00	MOUNT DAMPER, LOWER FRONT AMORTIGUADOR DE HULE FRENTE IN	1	1	1	1		
38	97575–08525	BOLT, WITH WASHER PERNO CON ARANDELA	2	2	2	2		
39	689–44551–01–8D	HOUSING, LOWER MOUNT RUBBER 1 CAJA AMORTIGUADOR INFERIOR HU	1	1	1	1		
40	689–44555–00	MOUNT DAMPER, LOWER SIDE AMORTIGUADOR DE HULE LADO INFE	2	2	2	2		
41	689–44552–01–8D	HOUSING, LOWER MOUNT RUBBER 2 CAJA AMORTIGUADOR INFERIOR HU	1	1	1	1		
42	95380–08600	NUT TUERCA	4	4	4	4		
43	90119–08M03	BOLT, WITH WASHER TORNILLO CON ARANDELA	2	2	2	2		
	90119–08M03	BOLT, WITH WASHER TORNILLO CON ARANDELA	1					E25B-*1 E25B-*1
44	97595–08565	BOLT, WITH WASHER PERNO CON ARANDELA	2	2	2	2		
	97595–08565	BOLT, WITH WASHER PERNO CON ARANDELA	1					E25B-*1 E25B-*1
45	69P–45151–00–8D	COVER, UPPER CASING CUBIERTA FUNDA SUPERIOR	1					E25B-*1 E25B-*1
46	90387–08019	COLLAR ESPACIADOR	1					E25B-*1 E25B-*1
47	90119–08061	BOLT, WITH WASHER TORNILLO CON ARANDELA	1					E25B-*1 E25B-*1
48	69P–43625–00	PLATE, TILT ROCK 4 PLACA DE SEGURO DE INCLINACION	1					E25B-*1 E25B-*1
49	90445–22002	HOSE (L82) MANGUERA (L82)	1					E25B-*1 E25B-*1
50	97095–08110	BOLT PERNO	1					E25B-*1 E25B-*1

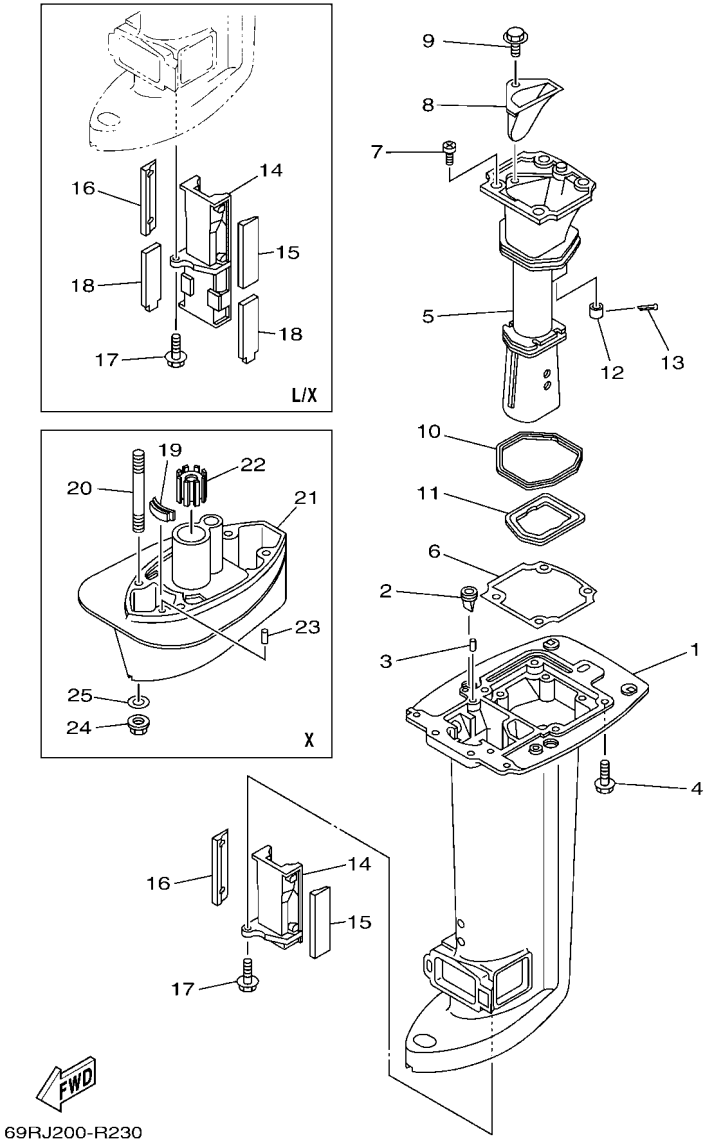

FIG. 22 UPPER CASING — FUNDA SUPERIOR

REF. NO.	PART NO. CODIGO Nº	DESCRIPTION DESCRIPCION	MH	WH	W	WC		REMARKS OBSERVACIONES
1	69P–45111–00–8D	CASING, UPPER CAJA SUPERIOR	1		1	1		S(16.7") S(16.7")
	69P–45111–10–8D	CASING, UPPER CAJA SUPERIOR	1	1	1			L(21.7"),X(25.0") L(21.7"),X(25.0")
2	65W–42717–00	RUBBER, SEAL 2 GOMA	2	2	2	2		
3	93606–12019	PIN, DOWEL PASADOR DE CLAVIJA	2	2	2	2		
4	97575–08530	BOLT, WITH WASHER PERNO CON ARANDELA	6	6	6	6		
5	69P–41131–01–CA	MANIFOLD, EXT. 1 TUBO MULTIPLE DE ESCAPE	1	1	1	1		UR FOR STD UR FOR STD
	69P–41131–11–CA	MANIFOLD, EXT. 1 TUBO MULTIPLE DE ESCAPE	1	1	1			UR UR
6	69P–41134–A0	GASKET, EXHAUST MANIFOLD EMPAQUE	1	1	1	1		
7	97880–06016	SCREW, PAN HEAD TORNILLO DE CABEZA CON PLANA	4	4	4	4		
8	69P–41137–00–CA	GUIDE, EXHAUST GUIA DE ESCAPE	1	1	1	1		
9	97595–08520	BOLT, WITH WASHER PERNO CON ARANDELA	1	1	1	1		
10	69P–41138–00	SEAL, EXT. 1 SELLO, ESCAPE 1	1	1	1	1		
11	69P–41139–00	SEAL, EXT. 2 SELLO, ESCAPE 2	1	1	1	1		
12	6A8–41135–00	GASKET, EXHAUST MANIFOLD EMPAQUE	1	1	1	1		
13	91490–30025	PIN. COTTER CHAVETA	1	1	1	1		
14	69P–47467–00–CA	PLATE, GUIDE PLACA DE GUIA	1		1	1		S(16.7") S(16.7")
	69P–47467–10–CA	PLATE, GUIDE PLACA DE GUIA	1	1	1			L(21.7"),X(25.0") L(21.7"),X(25.0")
15	69P–45127–10	SEAL SELLO DE GOMA	1	1	1	1		
16	69P–45128–10	SEAL 2 SELLO DE GOMA 2	1	1	1	1		
17	90119–06024	BOLT, WITH WASHER TORNILLO CON ARANDELA	1	1	1	1		
18	69P–45159–10	DAMPER SELLO DE GOMA	2	2	2			L(21.7"),X(25.0") L(21.7"),X(25.0")
19	61N–45375–00	DAMPER, SEAL GOMA DE SELLO	1					X(25.0") X(25.0")
20	90116–10M33	BOLT, STUD ESPARRAGO	4					X(25.0") X(25.0")
21	61N–45211–31–8D	EXTENSION EXTENSION	1					X(25.0") X(25.0")
22	689–45318–00	BUSHING, DRIVE SHAFT BUJE, EJE DE MANDO	1					X(25.0") X(25.0")
23	93606–11M24	PIN, DOWEL PASADOR DE CLAVIJA	2					X(25.0") X(25.0")
24	90179–10M03	NUT TUERCA	4					X(25.0") X(25.0")

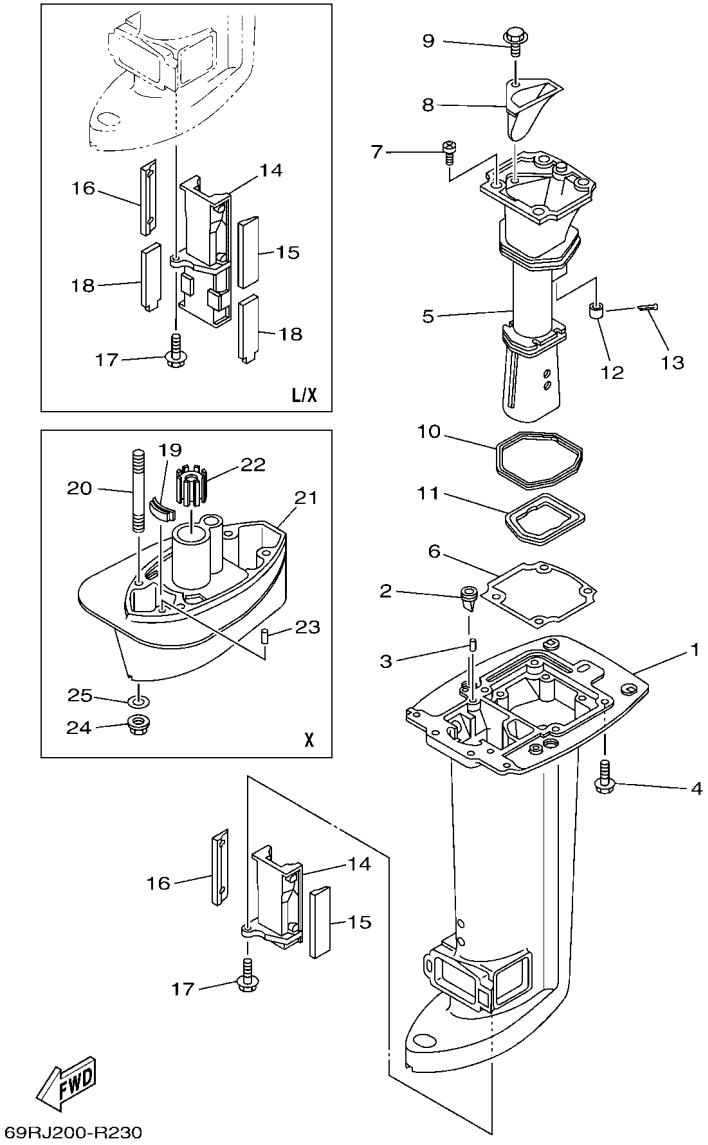

FIG. 22 UPPER CASING — FUNDA SUPERIOR

REF. NO.	PART NO. CODIGO Nº	DESCRIPTION DESCRIPCION	MH	WH	W	WC		REMARKS OBSERVACIONES
25	92995–10600	WASHER ARANDELA	4					X(25.0") X(25.0")

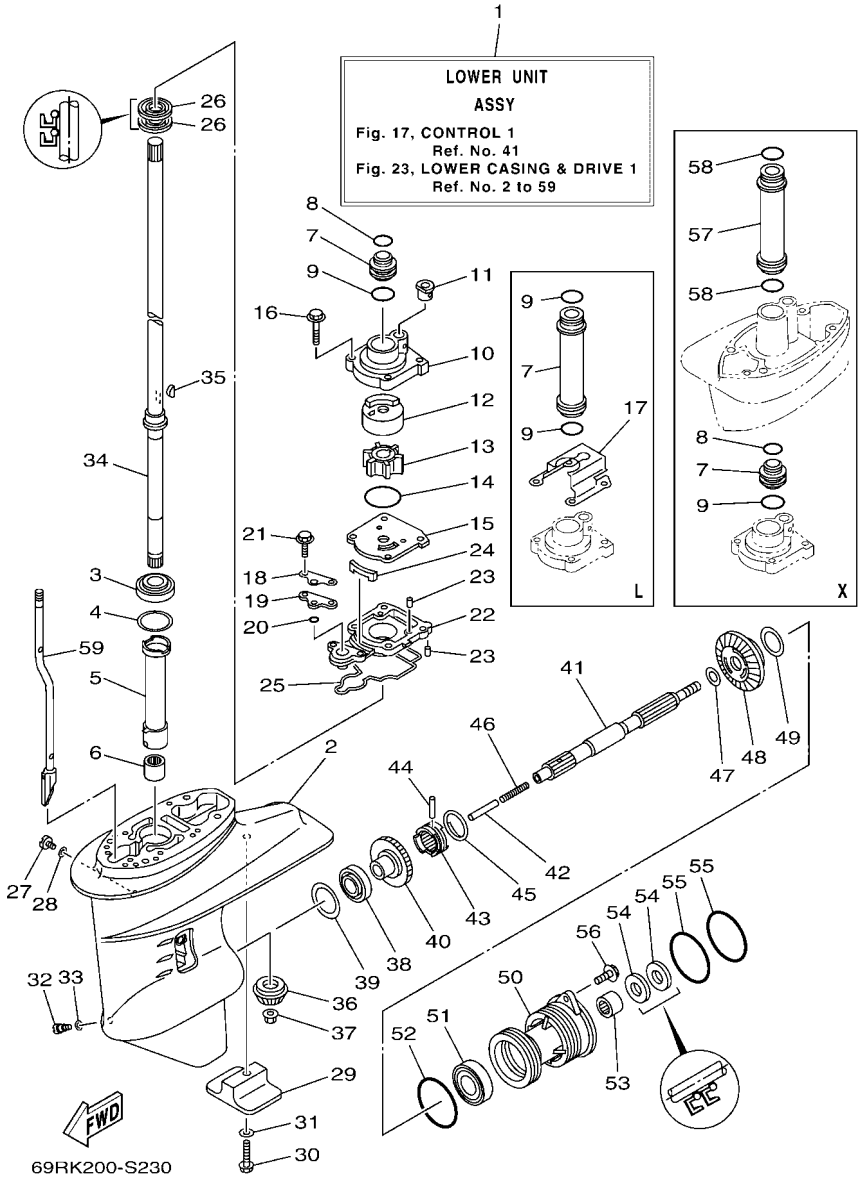

FIG. 23 LOWER CASING & DRIVE 1 — IMPULSOR E INFERIOR 1

REF. NO.	PART NO. CODIGO Nº	DESCRIPTION DESCRIPCION	MH	WH	W	WC		REMARKS OBSERVACIONES
1	69P–45300–03–8D	LOWER UNIT ASSY CONJUNTO UNIDAD INFERIOR	1		1	1		S(16.7") S(16.7")
	69P–45300–13–8D	LOWER UNIT ASSY CONJUNTO UNIDAD INFERIOR	1	1	1			L(21.7") L(21.7")
	69P–45300–33–8D	LOWER UNIT ASSY CONJUNTO UNIDAD INFERIOR	1					X(25.0") X(25.0")
2	61N–45311–02–8D	CASING, LOWER FUNDA INFERIOR	1	1	1	1		
3	93332–000W5	BEARING COJINETE	1	1	1	1		
4	61N–45587–00	SHIM (T:0.7MM) LAINA (T:0.7MM)	1	1	1	1		UR UR
	61N–45587–10	SHIM (T:1.0MM) LAINA (T:1.0MM)	1	1	1	1		UR UR
	61N–45587–20	SHIM (T:1.1MM) LAINA (T:1.1MM)	1	1	1	1		UR UR
	61N–45587–30	SHIM (T:1.2MM) LAINA (T:1.2MM)	1	1	1	1		UR UR
	61N–45587–40	SHIM (T:1.3MM) LAINA (T:1.3MM)	1	1	1	1		UR UR
	61N–45587–50	SHIM (T:1.4MM) LAINA (T:1.4MM)	1	1	1	1		UR UR
	61N–45587–60	SHIM (T:1.5MM) LAINA (T:1.5MM)	1	1	1	1		UR UR
	61N–45587–70	SHIM (T:1.6MM) LAINA (T:1.6MM)	1	1	1	1		UR UR
5	61N–45536–00	SLEEVE, DRIVE SHAFT CAMISA EJE DE MANDO	1	1	1	1		
6	93315–220V7	BEARING COJINETE DE RODILLOS	1	1	1	1		
7	61N–44362–00	TUBE, WATER 2 TUBO DE AGUA 2	1		1	1		S(16.7"),X(25.0") S(16.7"),X(25.0")
	61N–44362–10	TUBE, WATER 2 TUBO DE AGUA 2	1	1	1			L(21.7") L(21.7")
8	93210–22164	O-RING ANILLO O	1		1	1		S(16.7"),X(25.0") S(16.7"),X(25.0")
9	93210–26130	O-RING ANILLO O	1		1	1		S(16.7"),X(25.0") S(16.7"),X(25.0")
	93210–26130	O-RING ANILLO O	2	2	2			L(21.7") L(21.7")
10	69P–44311–01	HOUSING, WATER PUMP CAJA BOMBA DE AGUA	1	1	1	1		
11	6L2–44367–00	DAMPER, WATER SEAL 3 GOMA DEL SELLO DE AGUA 3	1	1	1	1		
12	69P–44322–00	INSERT, CARTRIDGE CARTUCHO	1	1	1			FOR STD FOR STD
	69P–44322–40	INSERT, CARTRIDGE CARTUCHO	1	1	1	1		FOR CHROMATE FOR CHROMATE
13	6H4–44352–02	IMPELLER IMPULSOR	1	1	1	1		
14	93210–45161	O-RING ANILLO O	1	1	1	1		
15	61N–44323–00	OUTER PLATE, CARTRIDGE PLACA EXTERIOR DEL CARTUCHO	1	1	1			FOR STD FOR STD

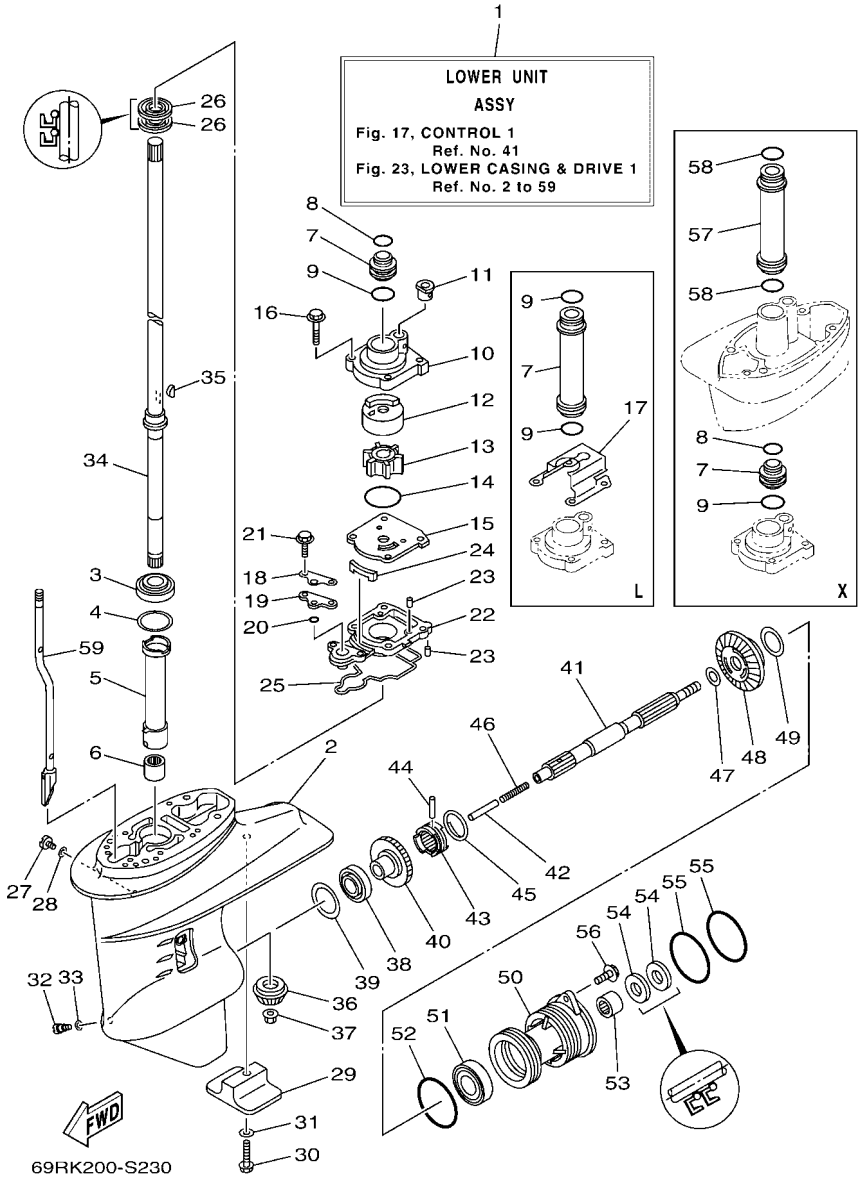

FIG. 23 LOWER CASING & DRIVE 1 — IMPULSOR E INFERIOR 1

REF. NO.	PART NO. CODIGO Nº	DESCRIPTION DESCRIPCION	MH	WH	W	WC		REMARKS OBSERVACIONES
15	61N–44323–40	OUTER PLATE, CARTRIDGE PLACA EXTERIOR DEL CARTUCHO	1	1	1	1		FOR CHROMATE FOR CHROMATE
16	97595–06540	BOLT, WITH WASHER PERNO CON ARANDELA	4	4	4	4		
17	65W–44328–11	PLATE PLACA	1	1	1			L(21.7") L(21.7")
18	61N–44176–00	BRACKET SOPORTE	1	1	1	1		
19	61N–45321–00	PLATE PLACA	1	1	1	1		
20	93210–06ME6	O-RING ANILLO O	1	1	1	1		
21	97595–06525	BOLT, WITH WASHER PERNO CON ARANDELA	2	2	2	2		
22	61N–45331–00–CA	HOUSING, BEARING CAJA DE COJINETE	1	1	1	1		
23	93604–10M03	PIN, DOWEL PASADOR DE CLAVIJA	3	3	3	3		
24	61N–45127–00	SEAL SELLO DE GOMA	1	1	1	1		
25	61N–45315–00	PACKING, LOWER CASING EMPAQUE	1	1	1	1		
26	93101–22067	OIL SEAL SELLO ACEITE	2	2	2	2		
27	90340–08002	PLUG, STRAIGHT SCREW TORNILLO, DE DRENAJE	1	1	1	1		
28	90430–08003	GASKET JUNTA	1	1	1	1		
29	61N–45251–01	ANODE CATODE	1	1	1	1		
30	95895–06035	BOLT, FLANGE TORNILLO DE REBORDE	1	1	1	1		
31	92990–06300	WASHER, INTERNAL TOOTH ARANDELA PLANA	1	1	1	1		
32	688–45341–10	PLUG, DRAIN TAPON, DREN	1	1	1	1		
33	90430–08003	GASKET JUNTA	1	1	1	1		
34	61N–45510–00	DRIVE SHAFT ASSY EJE DE MANDO COMPL.	1		1	1		S(16.7") S(16.7")
	61N–45510–10	DRIVE SHAFT ASSY EJE DE MANDO COMPL.	1	1	1			L(21.7") L(21.7")
	61N–45510–30	DRIVE SHAFT ASSY EJE DE MANDO COMPL.	1					X(25.0") X(25.0")
35	90280–03M03	KEY, WOODRUFF CUNA WOODRUFF	1	1	1	1		
36	61N–45551–00	PINION (13T) PINON (13T)	1	1	1	1		
37	90179–10M14	NUT TUERCA	1	1	1	1		
38	93332–00005	BEARING COJINETE	1	1	1	1		
39	6L2–45567–00	SHIM (T:1.0MM) LAINA(T:1.0MM)	1	1	1	1		UR UR

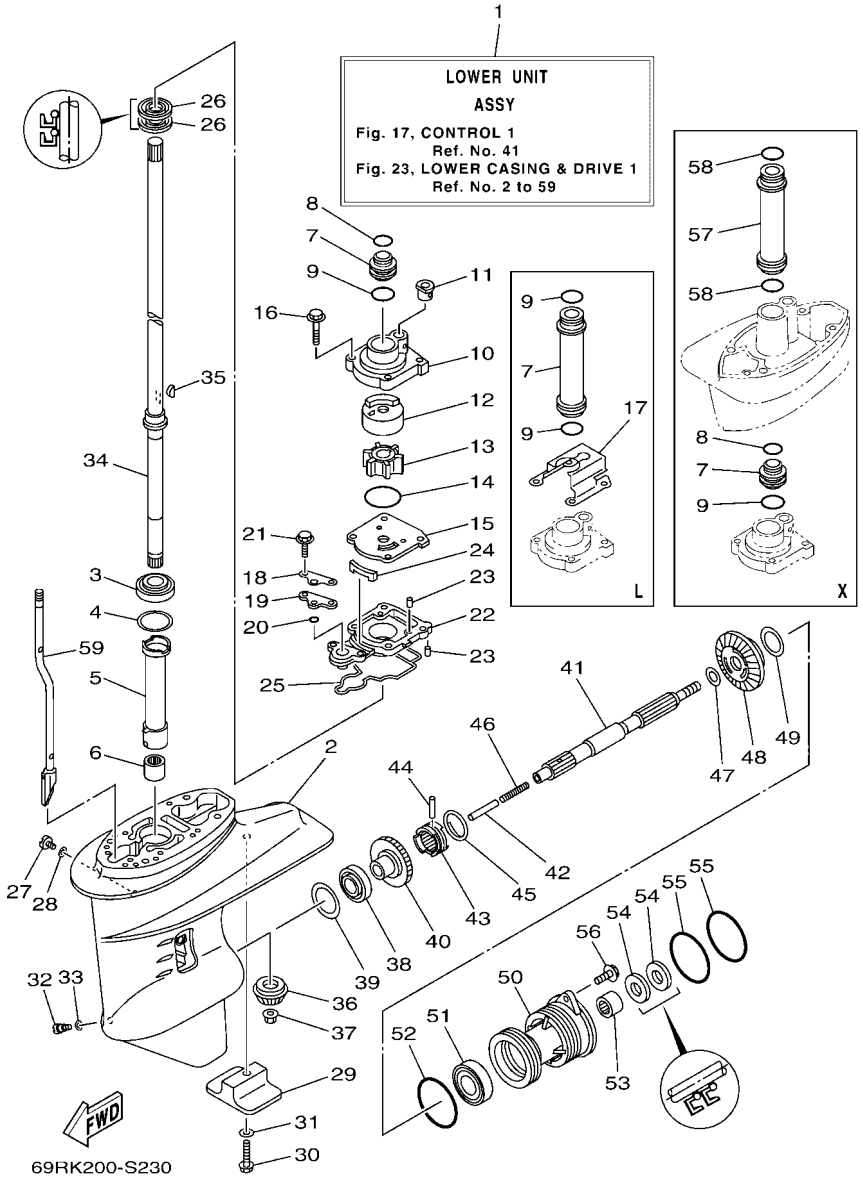

FIG. 23 LOWER CASING & DRIVE 1 — IMPULSOR E INFERIOR 1

REF. NO.	PART NO. CODIGO Nº	DESCRIPTION DESCRIPCION	MH	WH	W	WC		REMARKS OBSERVACIONES
39	6L2–45567–10	SHIM (T:1.1MM) LAINA(T:1.1MM)	1	1	1	1		UR UR
	6L2–45567–20	SHIM (T:1.2MM) LAINA(T:1.2MM)	1	1	1	1		UR UR
	6L2–45567–30	SHIM (T:1.3MM) LAINA(T:1.3MM)	1	1	1	1		UR UR
	6L2–45567–40	SHIM (T:1.4MM) LAINA(T:1.4MM)	1	1	1	1		UR UR
40	61N–45560–10	GEAR 1 (27T) ENGRANAJE 1 (27T)	1	1	1	1		
41	65W–45611–00	SHAFT, PROPELLER EJE PROPUSOR	1	1	1	1		
42	648–45635–00	PLUNGER, SHIFT EMBOLO DE CAMBIO	1	1	1	1		
43	6FM–45631–00	CLUTCH, DOG EMBRAGUE DE GARRA	1	1	1	1		
44	90250–05010	PIN, STRAIGHT PASADOR CILINDRICO	1	1	1	1		
45	648–45633–11	RING, CROSS PIN ANILLO DE PASADOR	1	1	1	1		
46	90501–10065	SPRING, COMPRESSION RESORTE DE COMPRESION	1	1	1	1		
47	90201–20417	WASHER, PLATE ARANDELA PLANA	1	1	1	1		
48	61N–45571–00	GEAR 2 (27T) ENGRANAJE 2 (27T)	1	1	1	1		
49	6L2–45577–00	SHIM (T:1.0MM) LAINA(T:1.0MM)	1	1	1	1		UR UR
	6L2–45577–10	SHIM (T:1.1MM) LAINA(T:1.1MM)	1	1	1	1		UR UR
	6L2–45577–20	SHIM (T:1.2MM) LAINA(T:1.2MM)	1	1	1	1		UR UR
	6L2–45577–30	SHIM (T:1.3MM) LAINA(T:1.3MM)	1	1	1	1		UR UR
50	61N–45361–01–8D	CAP, LOWER CASING FUNDA INFERIOR	1	1	1	1		
51	93306–00612	BEARING COJINETE	1	1	1	1		
52	93210–64ME7	O-RING ANILLO O	1	1	1	1		
53	93315–22004	BEARING COJINETE DE RODILLOS	1	1	1	1		
54	93101–20M07	OIL SEAL SELLO ACEITE	2	2	2	2		
55	93210–65M50	O-RING ANILLO O	2	2	2	2		
56	97575–06520	BOLT, WITH WASHER PERNO CON ARANDELA	2	2	2	2		
57	61N–44362–10	TUBE, WATER 2 TUBO DE AGUA 2	1					X(25.0") X(25.0")
58	93210–26130	O-RING ANILLO O	2					X(25.0") X(25.0")
59	61N–44150–00	SHIFT CAM ASSY CONJUNTO EJE LEVA COMPL.	1		1	1		S(16.7") S(16.7")

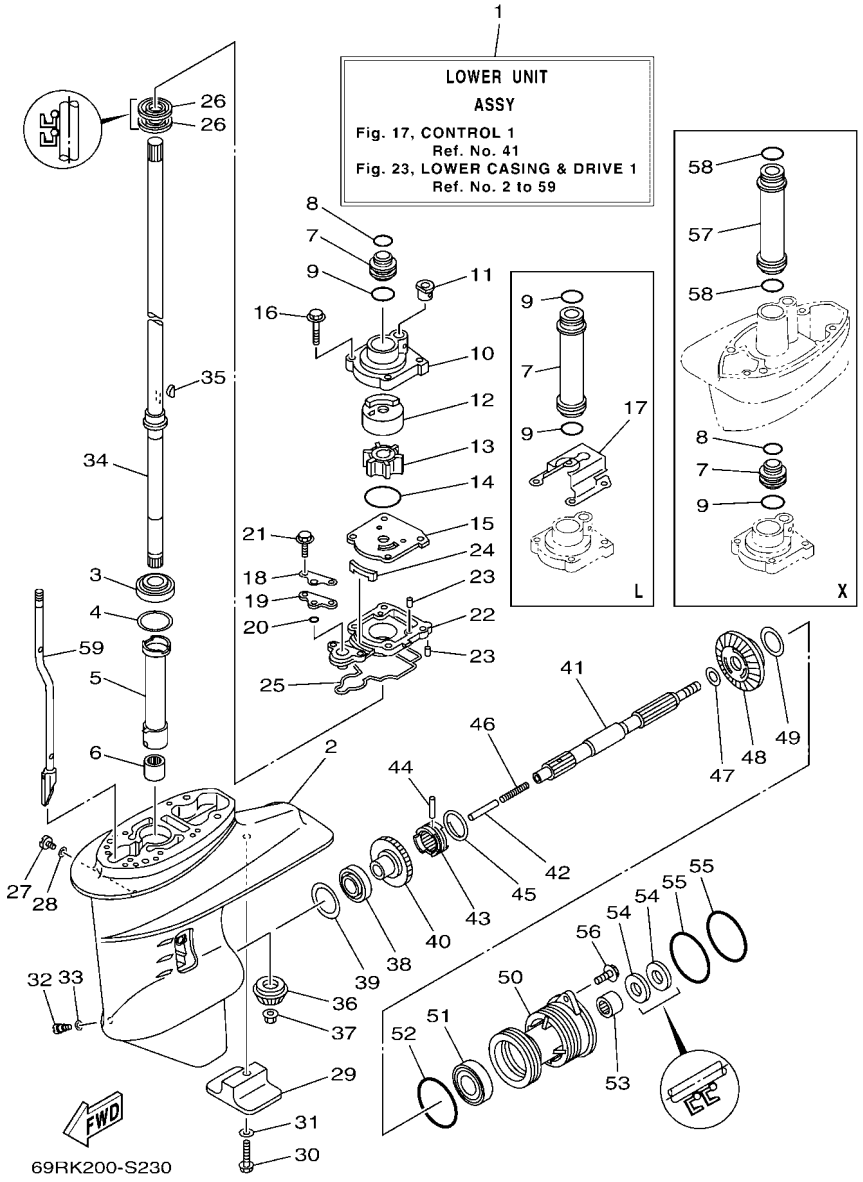

FIG. 23 LOWER CASING & DRIVE 1 — IMPULSOR E INFERIOR 1

REF. NO.	PART NO. CODIGO Nº	DESCRIPTION DESCRIPCION	MH	WH	W	WC		REMARKS OBSERVACIONES
59	61N–44150–10	SHIFT CAM ASSY CONJUNTO EJE LEVA COMPL.	1	1	1			L(21.7") L(21.7")
	61N–44150–30	SHIFT CAM ASSY CONJUNTO EJE LEVA COMPL.	1					X(25.0") X(25.0")

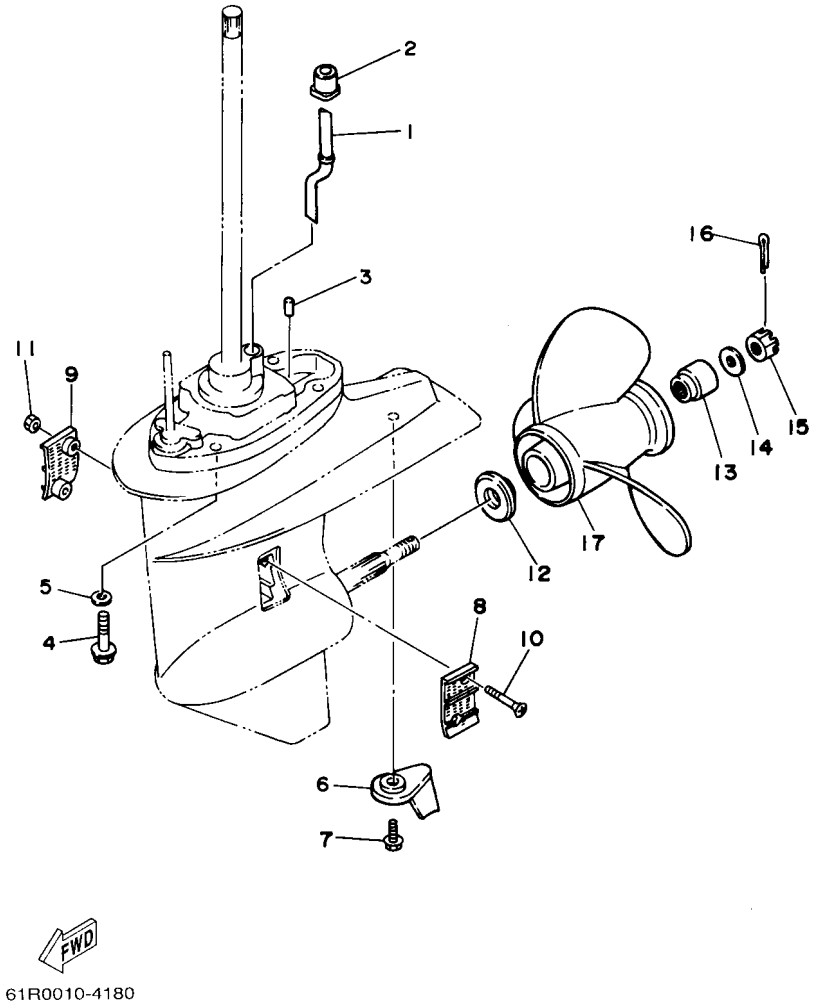

FIG. 24 LOWER CASING & DRIVE 2 — IMPULSOR E INFERIOR 2

REF. NO.	PART NO. CODIGO Nº	DESCRIPTION DESCRIPCION	MH	WH	W	WC		REMARKS OBSERVACIONES
1	61N–44361–00	TUBE, WATER 1 TUBO DE AGUA 1	1		1	1		S(16.7") S(16.7")
	61N–44361–10	TUBE, WATER 1 TUBO DE AGUA 1	1	1	1			L(21.7") L(21.7")
	61N–44361–30	TUBE, WATER 1 TUBO DE AGUA 1	1					X(25.0") X(25.0")
2	689–44366–00	DAMPER, WATER SEAL 2 GOMA DEL SELLO DE AGUA 2	1	1	1	1		
3	93606–11M24	PIN, DOWEL PASADOR DE CLAVIJA	2	2	2	2		
4	90105–10M12	BOLT, FLANGE TORNILLO	4	4	4	4		S(16.7"),L(21.7") S(16.7"),L(21.7")
5	92995–10600	WASHER ARANDELA	4	4	4	4		S(16.7"),L(21.7") S(16.7"),L(21.7")
6	61N–45371–00	TAB-TRIM QUILLA ESTABILIZADOR	1	1	1	1		
7	90119–06M48	BOLT, WITH WASHER TORNILLO CON ARANDELA	1	1	1	1		
8	6L2–45214–00	COVER, WATER INLET 1 CUBIERTA ENTRADA AGUA 1	1	1	1	1		
9	6L2–45215–00	COVER, WATER INLET 2 CUBIERTA ENTRADA AGUA 2	1	1	1	1		
10	90151–05M05	SCREW, COUNTERSUNK TORNILLO EMBUTIDO	2	2	2	2		
11	90185–05002	NUT, NYLON TUERCA AUTOBLOCANTE	2	2	2	2		
12	6L2–45987–01	SPACER 1 ESPACIADOR 1	1	1	1	1		
13	689–45997–00	SPACER 2 ESPACIADOR 2	1	1	1	1		
14	92990–14200	WASHER, PLAIN ARANDELA PLANA	1	1	1	1		
15	90171–14013	NUT, CASTLE TUERCA ENTALLADA	1	1	1	1		
16	91490–30022	PIN. COTTER CHAVETA	1	1	1	1		
17	664–45943–01	PROPELLER (3X9-7/8"X8"-F) PROPELA (3X9-7/8"X8"-F)	1	1	1	1		UR UR
	664–45941–01	PROPELLER (3X9-7/8"X9"-F) PROPELA (3X9-7/8"X9"-F)	1	1	1	1		UR UR
	62C–45941–00	PROPELLER (3X9-7/8"X10"-F) PROPELA (3X9-7/8"X10"-F)	1	1	1	1		UR UR
	664–45945–00	PROPELLER (3X9-7/8"X10-1/2"-F) PROPELA (3X9-7/8"X10-1/2"-F)	1	1	1	1		UR UR
	664–45947–01	PROPELLER (3X9-7/8"X11-1/4"-F) PROPELA (3X9-7/8"X11-1/4"-F)	1	1	1	1		UR UR
	664–45954–01	PROPELLER (3X9-7/8"X12"-F) PROPELA (3X9-7/8"X12"-F)	1	1	1	1		UR UR
	664–45949–02	PROPELLER (3X9-7/8"X13"-F) PROPELA (3X9-7/8"X13"-F)	1	1	1	1		UR UR
	664–45952–00	PROPELLER (3X9-7/8"X14"-F) PROPELA (3X9-7/8"X14"-F)	1	1	1	1		UR UR

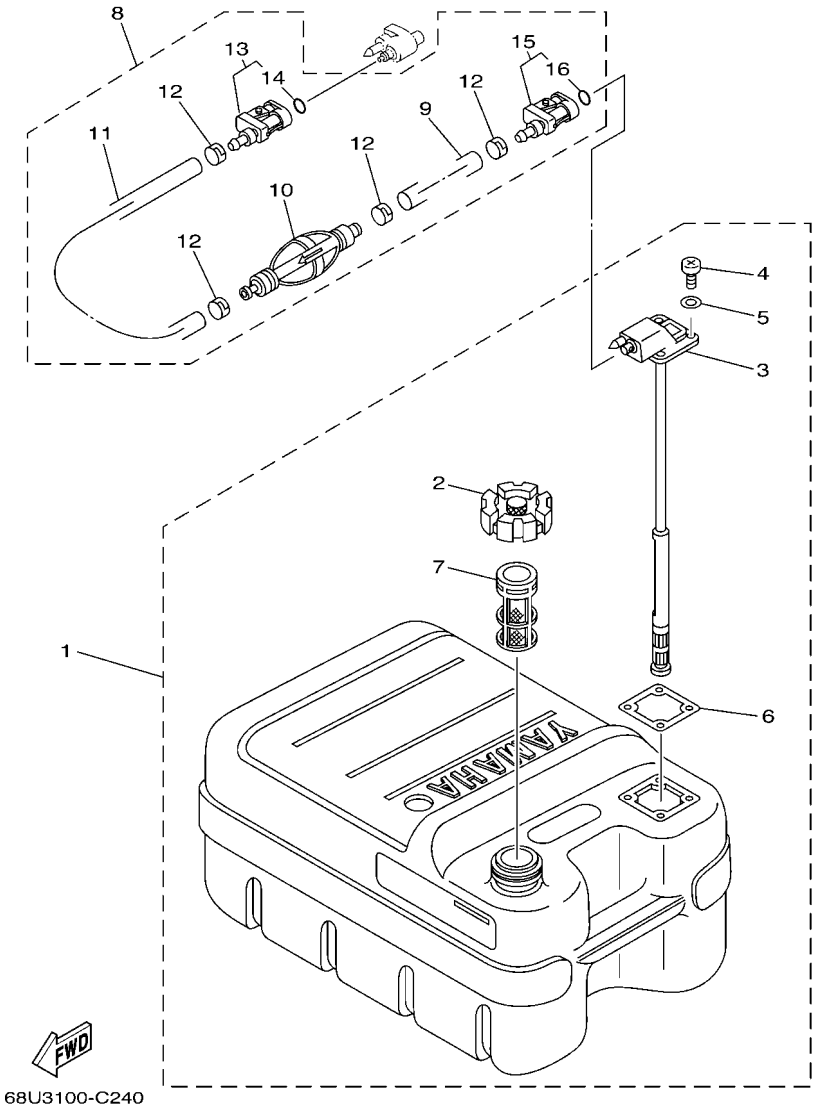

FIG. 25 FUEL TANK — DEPOSITO DE COMBUSTIBLE

REF. NO.	PART NO. CODIGO Nº	DESCRIPTION DESCRIPCION	MH	WH	W	WC		REMARKS OBSERVACIONES
1	6YJ–24201–20	FUEL TANK ASSY (24L) TANQUE DEL COMBUSTIBLE (24L)	1	1	1	1		AP AP
2	6YJ–24610–01	.CAP ASSY .TAPA COMPLETA	1	1	1	1		
3	6YJ–24260–10	.FUEL METER ASSY .MEDIDOR DE COMBUSTIBLE COMPL.	1	1	1	1		
4	90157–05M19	.SCREW, PAN HEAD .TORNILLO CABEZA CONICA PLANA	4	4	4	4		
5	6Y1–24329–00	.SEAL .SELLO	4	4	4	4		
6	6Y1–24268–00	.GASKET, FUEL METER .EMPAQ MEDIDOR DE COMBUSTIBLE	1	1	1	1		
7	6YJ–24167–00	.STRAINER .COLADOR	1	1	1	1		
8	61J–24306–04	FUEL PIPE COMP. 1 TUBO COMBUST. COMPL 1	1	1	1	1		AP AP
9	90445–11M06	.HOSE (L2050) .MANGUERA (L2050)	1	1	1	1		
10	61J–24360–00	.PRIMER PUMP ASSY .SOPORTE BOMBA	1	1	1	1		
11	90445–11M05	.HOSE (L850) .MANGUERA (L850)	1	1	1	1		
12	650–24351–51	.BAND 1 .ABRAZADERA 1	4	4	4	4		
13	6G1–24305–05	.FUEL PIPE JOINT COMP. 2 .CONECTOR MANGUERA COMBUST. 2	1	1	1	1		
14	93210–08287	..O-RING ..ANILLO O	1	1	1	1		
15	6Y1–24305–06	.FUEL PIPE JOINT COMP. 2 .CONECTOR MANGUERA COMBUST. 2	1	1	1	1		
16	93210–08287	..O-RING ..ANILLO O	1	1	1	1		

FIG. 26 STEERING GUIDE DIRECCIONGUIAR

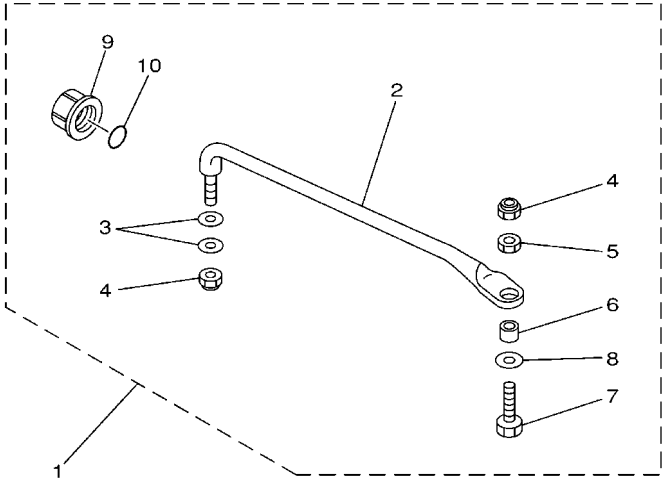

6J83100-2290

REF. NO.	PART NO. CODIGO Nº	DESCRIPTION DESCRIPCION	MH	WH	W	WC		REMARKS OBSERVACIONES
1	689–61350–02	STEERING GUIDE ATTACHMENT KIT ESTUCHE ADITAMENTO GUIA DE TIM			1	1		AP FOR CHN,RUS AP FOR CHN,RUS
2	689–61351–01	.ROD, STEERING LINK .VARILLA ESLABON DIRECCION			1	1		
3	90201–10M20	.WASHER, PLATE .ARANDELA PLANA			2	2		
4	90185–09M01	.NUT, SELF-LOCKING .TUERCA AUTOBLOCANTE			2	2		
5	90170–09M03	.NUT .TUERCA			1	1		
6	90387–10M42	.COLLAR .ESPACIADOR			1	1		
7	6E5–61355–00	.BOLT .TORNILLO			1	1		
8	90201–10M63	.WASHER, PLATE .ARANDELA PLANA			1	1		
9	6E5–43145–01	.CAP, CLAMP BRACKET .TAPA			1	1		
10	93210–16275	.O-RING .ANILLO O			1	1		

FIG. 27 REMOTE CONTROL BOX — CONTROL REMOTO COMPLETO

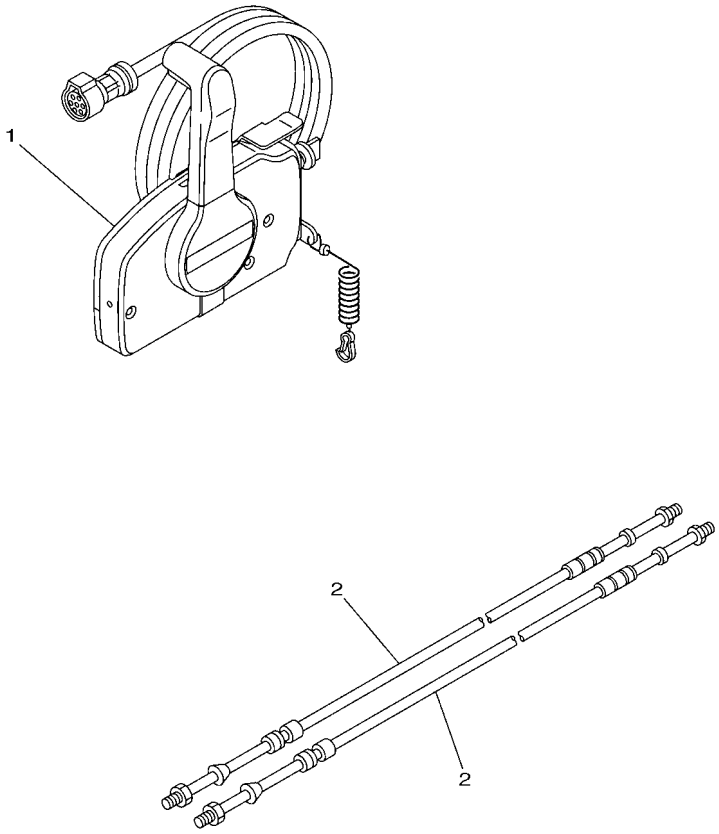

6DR3300-P300

REF. NO.	PART NO. CODIGO Nº	DESCRIPTION DESCRIPCION	MH	WH	W	WC		REMARKS OBSERVACIONES
1	703–48230–21	REMOTE CONTROL ASSY (7P) CONTROL REMOTO COMPL. (7P)			1	1		AP WITHOUT PT/T SW. AP WITHOUT PT/T SW.
2	701–48320–20	CABLE, REMOTE CONTROL L=13F CABLE CONTROL REMOTO L=13F			2	2		UR UR
	701–48320–50	CABLE, REMOTE CONTROL L=15F CABLE CONTROL REMOTO L=15F			2	2		UR UR

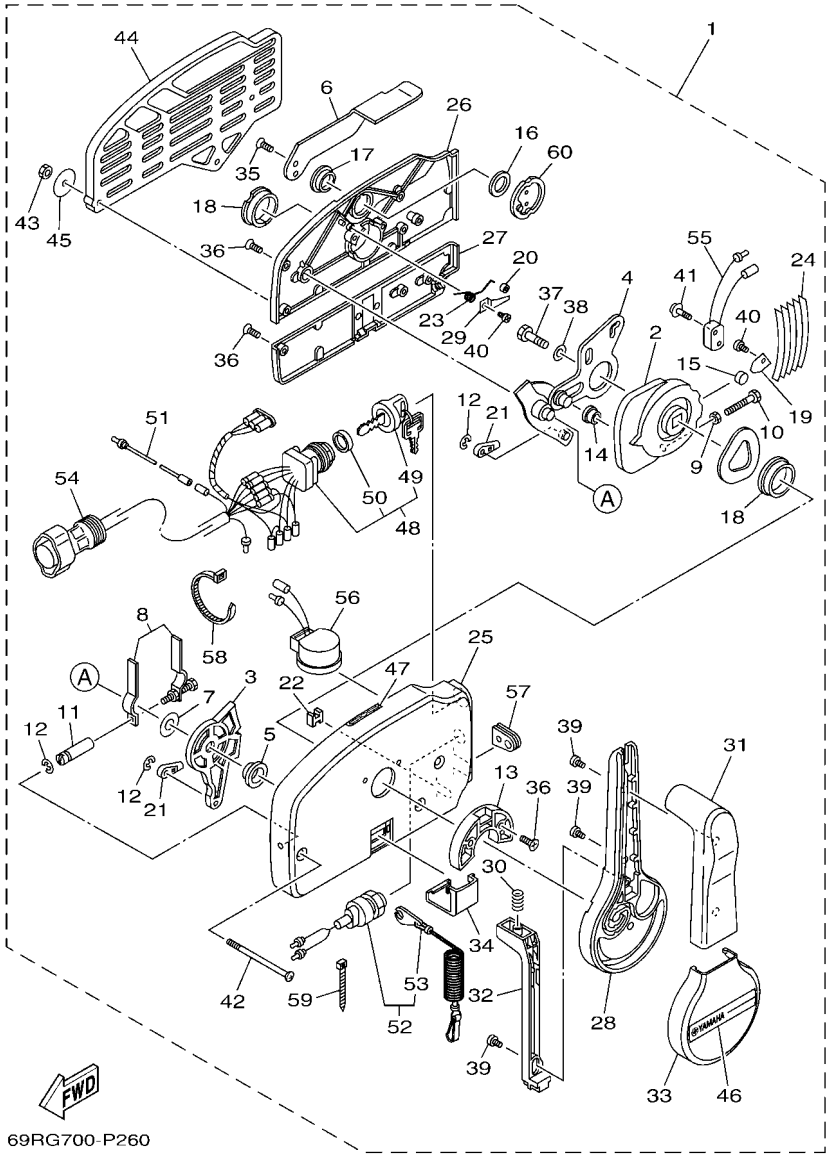

FIG. 28 REMOTE CONTROL ASSY — CONTROL REMOTO COMPL

REF. NO.	PART NO. CODIGO Nº	DESCRIPTION DESCRIPCION	MH	WH	W	WC		REMARKS OBSERVACIONES
1	703–48230–21	REMOTE CONTROL ASSY (7P) CONTROL REMOTO COMPL. (7P)			1	1		AP WITHOUT PT/T SW. AP WITHOUT PT/T SW.
2	703–48232–00	.GEAR .ENGRANAJE 1			1	1		
3	703–48271–00	.ARM, SHIFT .BRAZO CAMBIADOR			1	1		
4	703–48261–11	.ARM, THROTTLE .BRAZO ACELERADOR			1	1		
5	703–48235–00	.BUSHING .BUJE			1	1		
6	703–48152–10	.KNOB, FREE ACCEL. .PERILLA			1	1		
7	703–48268–00	.SPACER .ESPACIADOR 3			1	1		
8	703–48264–00	.FRICTION, THROTTLE .FRICCION DE ACELERADOR			1	1		
9	95380–05600	.NUT .TUERCA			1	1		
10	97380–05025	.BOLT .TORNILLO HEXAGONAL			1	1		
11	703–48265–10	.SHAFT, FRICTION .EJE FRICCION			1	1		
12	93430–06024	.CIRCLIP .SEGURO			3	3		
13	703–48245–00	.PLATE, LOCK .PLACA CERRADURA			1	1		
14	703–48252–00	.ROLLER, CAM .RODILLO LEVA			1	1		
15	701–48248–00	.ROLLER, FREE ACCEL. .RODILLO ACELERADOR LIBRE			1	1		
16	703–48198–00	.WASHER, WAVE .RONDANA ONDULADA 3			1	1		
17	703–48243–00	.BUSHING .BUJE 3			1	1		
18	703–48236–00	.BUSHING 1 .BUJE			2	2		
19	703–48189–00	.RETAINER .RETENEDOR			1	1		
20	703–48234–00	.ROLLER, DETENT .RODILLO			1	1		
21	703–48345–01	.CABLE END, REMOTE CONTROL 2 .TERMINAL CABLE DE CONTROL REMO			2	2		
22	703–48358–00	.ANCHOR, CABLE .ABRAZADERA CABLE			1	1		
23	703–48244–00	.SPRING, FREE ACCEL. .RESORTE ACELERADOR LIBRE			1	1		
24	703–48238–00	.SPRING, DETENT .RESORTE			5	5		
25	703–48211–10	.HOUSING,1 .CAJA			1	1		
26	703–48212–10	.BACK PLATE 1 .PLACA TRASERA 1			1	1		
27	703–48213–10	.BACK PLATE 2 .PLACA TRASERA 2			1	1		

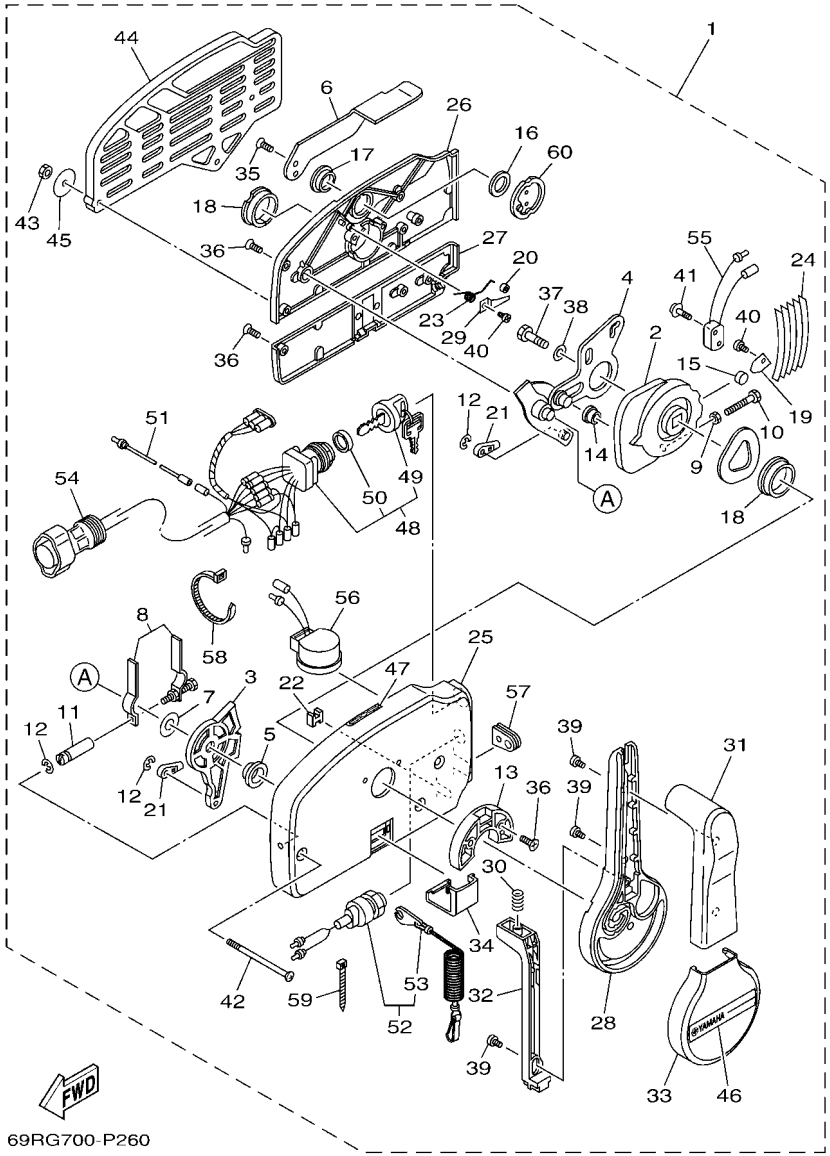

FIG. 28 REMOTE CONTROL ASSY — CONTROL REMOTO COMPL

REF. NO.	PART NO. CODIGO Nº	DESCRIPTION DESCRIPCION	MH	WH	W	WC		REMARKS OBSERVACIONES
28	703–48221–10	.LEVER, CONTROL .PALANCA CONTROL			1	1		
29	703–48246–00	.SPACER .ESPACIADOR			1	1		
30	703–48227–00	.SPRING, NEUTRAL LOCK .RESORTE DE SEGURO			1	1		
31	703–48222–30	.GRIP, CONTROL LEVER .MANGO DE PALANCA CONTROL			1	1		SINGLE SINGLE
32	703–48223–10	.LOCK, NEUTRAL .CERRADURA NEUTRO			1	1		
33	703–48225–10	.COVER .CUBIERTA			1	1		
34	703–48219–10	.COVER, LEAD .CUBIERTA			1	1		
35	703–48281–00	.SCREW .TORNILLO 1			2	2		
36	703–44189–20	.SCREW .TORNILLO			7	7		
37	97380–08030	.BOLT .TORNILLO HEXAGONAL			1	1		
38	92990–08600	.WASHER, PLATE .ARANDELA PLANA			1	1		
39	703–48128–10	.SCREW 2 .TORNILLO 2			3	3		
40	98580–04006	.SCREW, PAN HEAD .TORNILLO DE CABEZA CRUZADA			2	2		
41	703–48129–00	.SCREW 3 .TORNILLO 3			2	2		
42	703–44189–30	.SCREW .TORNILLO			3	3		
43	95380–06600	.NUT, HEXAGON .TUERCA			3	3		
44	703–48293–10	.SPACER, REMOTE CONTROL .ESPACIADOR			1	1		SINGLE SINGLE
45	701–48287–00	.WASHER .ARANDELA			3	3		
46	703–48215–10	.GRAPHIC .CALCOMANIA 1			1	1		
47	6X3–44191–00	.INDICATOR, SHIFT .INDICADOR DE CAMBIOS			1	1		
48	703–82510–34	.MAIN SWITCH ASSY .CONJUNTO DE LLAVE IGNICION			1	1		
49	703–82577–00	..CAP, KEY ..TAPA			1	1		
50	6K1–82532–00	..CAP ..TAPA			1	1		
51	703–82531–00	.WIRE, LEAD (L70) .CABLE CONDUCTOR (L70)			1	1		
52	688–82575–02	.ENGINE STOP SWITCH ASSY .INTERRUPTOR DE PARADA COMPL			1	1		
53	682–82556–00	..LANYARD, STOP SWITCH ..CORDON DE INTERRUPTOR PARADA			1	1		
54	688–82586–21	.EXTENSION, WIRE HARNESS (4.9M) .EXTENSION, ARNES DE CABLES (4.			1	1		(7P) (7P)

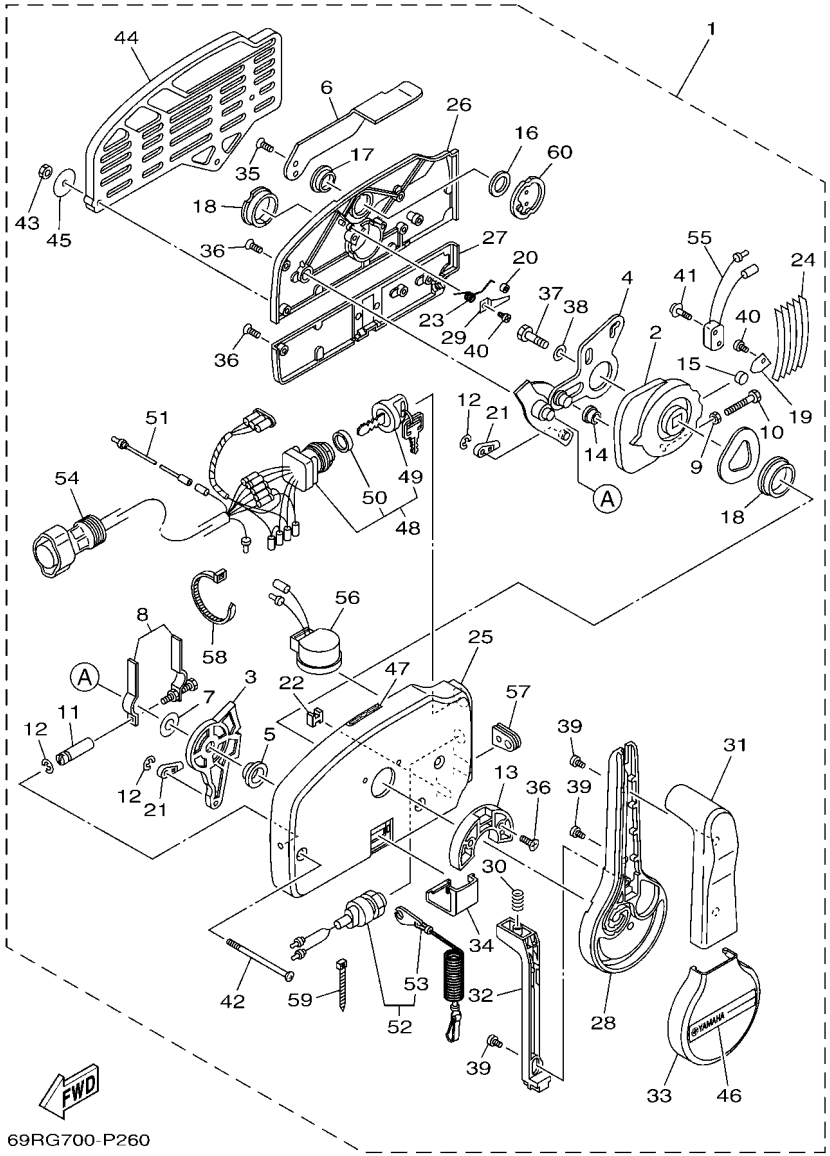

FIG. 28 REMOTE CONTROL ASSY — CONTROL REMOTO COMPL

REF. NO.	PART NO. CODIGO Nº	DESCRIPTION DESCRIPCION	MH	WH	W	WC		REMARKS OBSERVACIONES
55	703–82540–00	.NEUTRAL SWITCH ASSY .INTERRUPTOR NEUTRAL COMPL			1	1		
56	703–83383–11	.BUZZER .ZUMBADOR			1	1		
57	703–48284–00	.GROMMET .TAPON			1	1		
58	703–82591–00	.BAND .BANDA			1	1		
59	703–82592–00	.BAND .BANDA			1	1		
60	703–48153–00	.SHAFT, FREE ACCEL. .EJE			1	1		

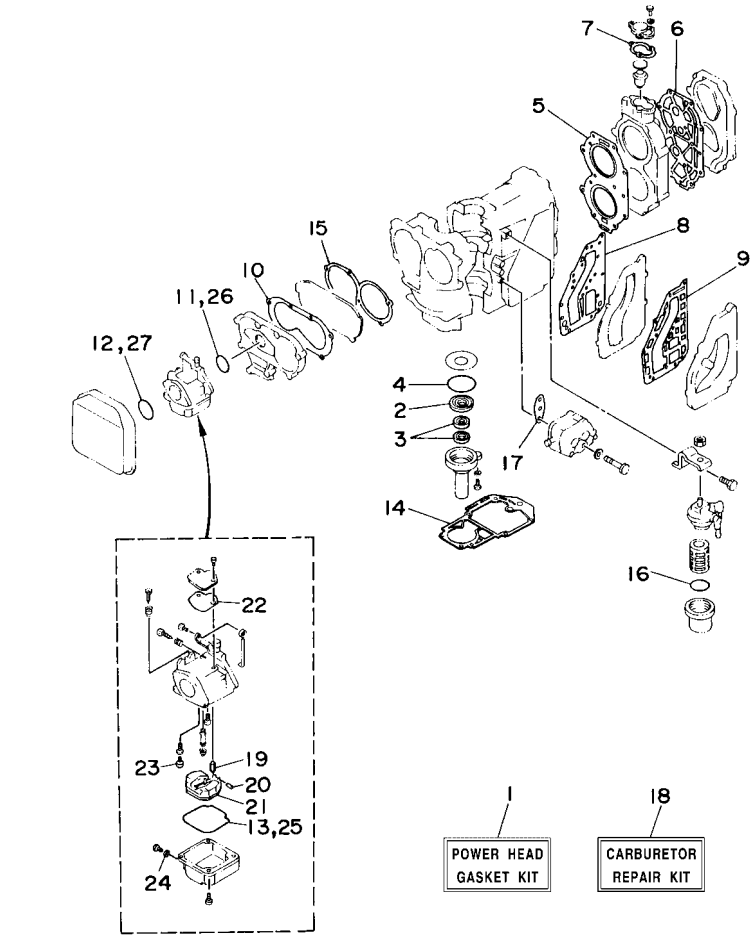

FIG. 29 REPAIR KIT 1 — ESTUCHE REPARATION 1

REF. NO.	PART NO. CODIGO Nº	DESCRIPTION DESCRIPCION	MH	WH	W	WC		REMARKS OBSERVACIONES
1	69P–W0001–00	POWER HEAD GASKET KIT JUEGO DE EMPAQUE DE MOTOR	1	1	1	1		
2	93102–25008	.OIL SEAL .SELLO ACEITE	1	1	1	1		
3	93101–16001	.OIL SEAL .SELLO ACEITE	2	2	2	2		
4	93210–58M21	.O-RING .ANILLO O	1	1	1	1		
5	61N–11181–A2	.GASKET, CYLINDER HEAD 1 .JUNTA, DE CULATA 1	1	1	1	1		
6	61T–11193–A1	.GASKET, HEAD COVER 1 .EMPAQUE	1	1	1	1		
7	655–12414–A1	.GASKET, COVER .EMPAQUE	1	1	1	1		
8	6K8–41122–A1	.GASKET, EXHAUST INNER COVER .EMPAQUE	1	1	1	1		
9	6K8–41124–A1	.GASKET, EXHAUST OUTER COVER .EMPAQUE	1	1	1	1		
10	648–13645–A0	.GASKET, MANIFOLD 1 .EMPAQUE	1	1	1	1		
11	61N–14198–00	.GASKET .EMPAQUE	1	1	1	1		
12	93210–40659	.O-RING .ANILLO O	1	1	1	1		
13	6L2–14384–00	.GASKET, FLOAT CHAMBER .EMPAQUE DE CAMARA DE BOIA	1	1	1	1		
14	689–45113–A1	.GASKET, UPPER CASING .EMPAQUE	1	1	1	1		
15	648–13621–A1	.GASKET, VALVE SEAT .JUNTA, DE VALV.DE EMPAQUE	1	1	1	1		
16	93210–32738	.O-RING .ANILLO O	1	1	1	1		
17	650–24431–A0	.GASKET, FUEL PUMP 1 .EMPAQUE BOMBA COMBUST 1	1	1	1	1		
18	61N–W0093–00	CARBURETOR REPAIR KIT KIT REPARACION CARBURADOR	1	1	1	1		
19	61N–14392–00	.VALVE, NEEDLE .VALVULA DE AGUJA	1	1	1	1		
20	6E5–14386–01	.PIN, FLOAT .PASADOR DE BOIA	1	1	1	1		
21	6L2–14385–00	.FLOAT .BOIA	1	1	1	1		
22	6L2–14399–00	.GASKET .EMPAQUE	1	1	1	1		
23	50M–14355–00	.PLUG .TAPON	1	1	1	1		
24	6L2–14398–00	.GASKET .EMPAQUE	1	1	1	1		
25	6L2–14384–00	.GASKET, FLOAT CHAMBER .EMPAQUE DE CAMARA DE BOIA	1	1	1	1		
26	61N–14198–00	.GASKET .EMPAQUE	1	1	1	1		
27	93210–40659	.O-RING .ANILLO O	1	1	1	1		

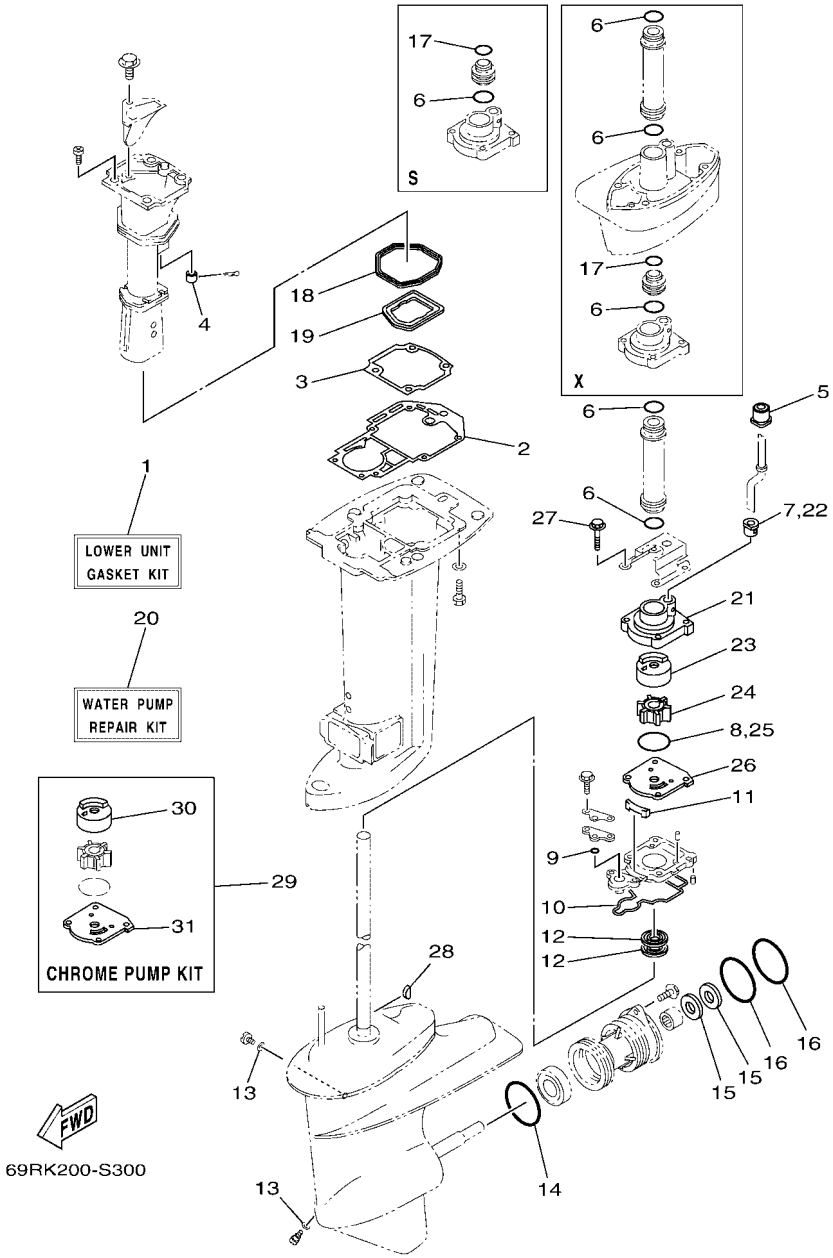

FIG. 30 REPAIR KIT 2 — ESTUCHE REPARATION 2

REF. NO.	PART NO. CODIGO Nº	DESCRIPTION DESCRIPCION	MH	WH	W	WC		REMARKS OBSERVACIONES
1	69P–W0001–20	LOWER UNIT GASKET KIT JUEGO DE EMPAQUE UNIDAD INFER.	1	1	1	1		
2	689–45113–A1	.GASKET, UPPER CASING .EMPAQUE	1	1	1	1		
3	69P–41134–A0	.GASKET, EXHAUST MANIFOLD .EMPAQUE	1	1	1	1		
4	6A8–41135–00	.GASKET, EXHAUST MANIFOLD .EMPAQUE	1	1	1	1		
5	689–44366–00	.DAMPER, WATER SEAL 2 .GOMA DEL SELLO DE AGUA 2	1	1	1	1		
6	93210–26130	.O-RING .ANILLO O	3	3	3	3		UN UN
7	6L2–44367–00	.DAMPER, WATER SEAL 3 .GOMA DEL SELLO DE AGUA 3	1	1	1	1		
8	93210–45161	.O-RING .ANILLO O	1	1	1	1		
9	93210–06ME6	.O-RING .ANILLO O	1	1	1	1		
10	61N–45315–00	.PACKING, LOWER CASING .EMPAQUE	1	1	1	1		
11	61N–45127–00	.SEAL .SELLO DE GOMA	1	1	1	1		
12	93101–22067	.OIL SEAL .SELLO ACEITE	2	2	2	2		
13	90430–08003	.GASKET .JUNTA	2	2	2	2		
14	93210–64ME7	.O-RING .ANILLO O	1	1	1	1		
15	93101–20M07	.OIL SEAL .SELLO ACEITE	2	2	2	2		
16	93210–65M50	.O-RING .ANILLO O	2	2	2	2		
17	93210–22164	.O-RING .ANILLO O	1	1	1	1		S(16.7"),X(25.0") S(16.7"),X(25.0")
18	69P–41138–00	.SEAL, EXT. 1 .SELLO, ESCAPE 1	1	1	1	1		
19	69P–41139–00	.SEAL, EXT. 2 .SELLO, ESCAPE 2	1	1	1	1		
20	69P–W0078–00	WATER PUMP REPAIR KIT ESTUCHE REPARACION BOMBA AGUA	1	1	1	1		
21	69P–44311–01	.HOUSING, WATER PUMP .CAJA BOMBA DE AGUA	1	1	1	1		
22	6L2–44367–00	.DAMPER, WATER SEAL 3 .GOMA DEL SELLO DE AGUA 3	1	1	1	1		
23	69P–44322–00	.INSERT, CARTRIDGE .CARTUCHO	1	1	1	1		
24	6H4–44352–02	.IMPELLER .IMPULSOR	1	1	1	1		
25	93210–45161	.O-RING .ANILLO O	1	1	1	1		
26	61N–44323–00	.OUTER PLATE, CARTRIDGE .PLACA EXTERIOR DEL CARTUCHO	1	1	1	1		
27	97595–06540	.BOLT, WITH WASHER .PERNO CON ARANDELA	4	4	4	4		

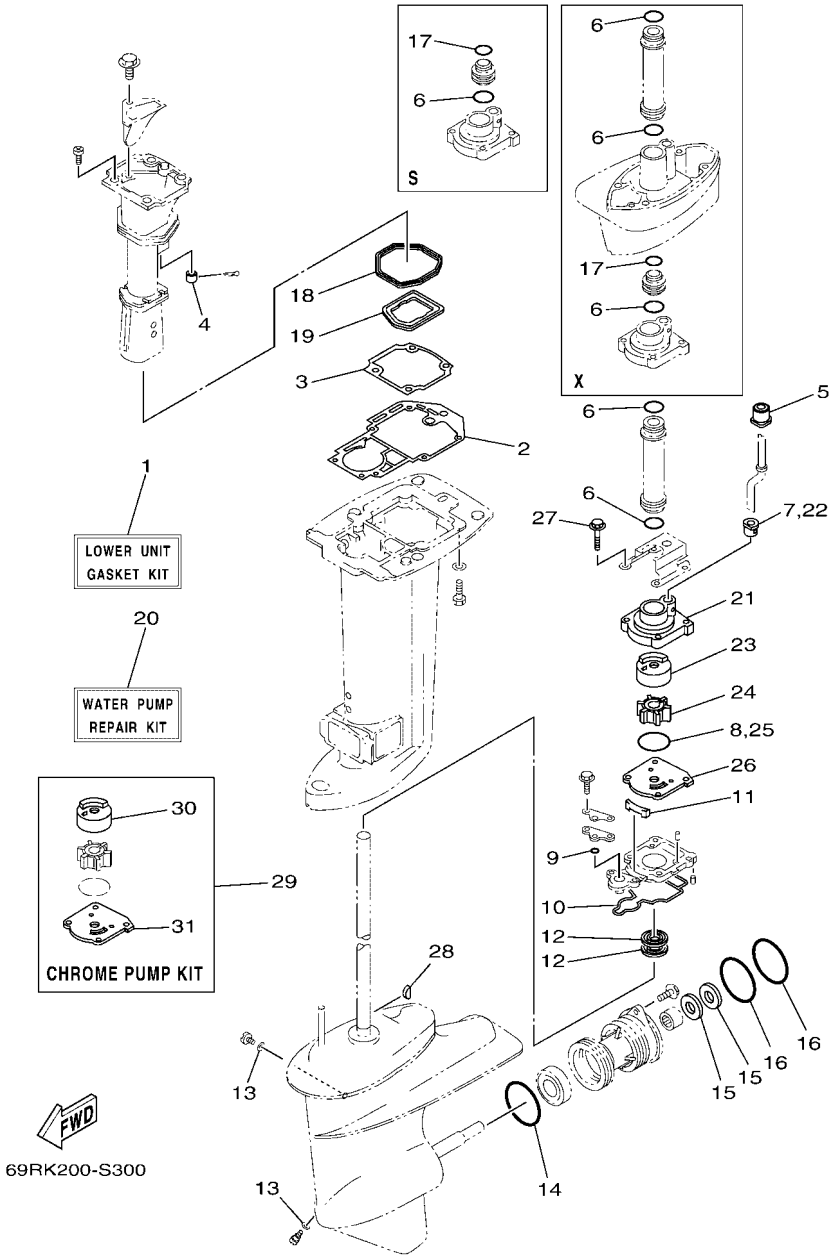

FIG. 30 REPAIR KIT 2 — ESTUCHE REPARATION 2

REF. NO.	PART NO. CODIGO Nº	DESCRIPTION DESCRIPCION	MH	WH	W	WC		REMARKS OBSERVACIONES
28	90280–03M03	.KEY, WOODRUFF .CUNA WOODRUFF	1	1	1	1		
29	69P–W0078–0A	CHROME PUMP KIT ESTUCHE REPARACION BOMBA AGUA	1	1	1	1		
30	69P–44322–40	.INSERT, CARTRIDGE .CARTUCHO	1	1	1	1		
31	61N–44323–40	.OUTER PLATE, CARTRIDGE .PLACA EXTERIOR DEL CARTUCHO	1	1	1	1		

NUMERICAL INDEX
INDICE NUMERICO

PART NO. CODIGO Nº	REF. NO.
61N–11111–01–1S	3 – 18
61T–11111–01–1S	3 – 18
61N–11181–A2	3 – 20
	29 – 5
61N–11191–01–1S	3 – 21
61T–11193–A1	3 – 22
	29 – 6
689–11325–00	1 – 2
	3 – 16
6J8–11325–00	1 – 1
	3 – 12
6H3–11327–00–94	3 – 13
6H3–11328–00	3 – 14
676–11372–00	3 – 19
	3 – 34
69P–11400–00	4 – 1
69P–11412–00	4 – 2
61N–11422–00	4 – 3
61N–11432–00	4 – 4
61N–11442–00	4 – 5
61N–11515–00	4 – 10
61N–11603–00	4 – 19
61N–11604–00	4 – 19
61N–11605–00	4 – 19
61N–11631–00–95	4 – 18
689–11633–00	4 – 20
688–11634–00	4 – 22
61N–11635–00	4 – 18
61N–11636–00	4 – 18
689–11651–00	4 – 12
689–11681–01	4 – 13
6E5–12411–02	1 – 3
	3 – 25
6E5–12412–00	3 – 26
655–12413–01–1S	3 – 28
655–12414–A1	1 – 4
	3 – 29
	29 – 7
61N–13610–00	5 – 1
689–13610–01	5 – 1
648–13621–A1	5 – 3
	29 – 15
61N–13641–01	5 – 4
648–13645–A0	5 – 5
	29 – 10
6L2–14157–00	6 – 9
61N–14198–00	5 – 10
	29 – 11

PART NO. CODIGO Nº	REF. NO.
61N–14198–00	29 – 26
61N–14212–00	6 – 21
646–14212–01	6 – 18
69P–14301–00	6 – 1
69S–14301–00	6 – 1
664–14321–01	6 – 15
61N–14323–00	6 – 19
6A0–14325–00	7 – 25
61N–14341–00	6 – 11
61T–14341–00	6 – 11
6L2–14342–34	6 – 13
61N–14343–65	6 – 12
50M–14355–00	6 – 14
	29 – 23
61N–14381–00	6 – 2
677–14383–01	6 – 3
6L2–14384–00	6 – 20
	29 – 13
	29 – 25
6L2–14385–00	6 – 7
	29 – 21
6E5–14386–01	6 – 6
	29 – 20
61N–14392–00	6 – 5
	29 – 19
6L2–14398–00	6 – 4
	29 – 24
6L2–14399–00	6 – 10
	29 – 22
61N–14440–A1	5 – 11
69P–14497–01	17 – 1
62Y–14597–00	6 – 23
69P–15100–00	3 – 2
689–15396–01–CA	3 – 6
61N–15711–10	8 – 2
6F5–15713–01	8 – 5
6G0–15714–01	8 – 3
61N–15715–00	8 – 6
6F5–15716–01	8 – 8
6F5–15723–01	8 – 31
6F5–15726–01	8 – 11
61N–15734–00	8 – 7
6F5–15739–00	8 – 16
6F5–15741–01	8 – 4
69P–15746–00	8 – 38
689–15747–70	8 – 39
656–15748–00	8 – 34
6G0–15754–00	8 – 9

PART NO. CODIGO Nº	REF. NO.
689–15755–01	8 – 14
69S–15758–00	8 – 18
61N–15762–00	8 – 19
6F5–15764–00	8 – 15
61T–15770–00	8 – 33
6H7–15771–01–94	8 – 26
656–15772–00	8 – 28
61T–15772–01–94	8 – 28
69P–15774–00	8 – 36
6F5–15779–02	8 – 17
6A0–15789–00	8 – 21
6YJ–24167–00	25 – 7
6YJ–24201–20	25 – 1
6YJ–24260–10	25 – 3
6Y1–24268–00	25 – 6
6G1–24304–10	7 – 1
6G1–24305–05	25 – 13
6Y1–24305–06	25 – 15
61J–24306–04	25 – 8
689–24311–00	7 – 13
6A1–24311–00	7 – 29
61N–24329–00	7 – 2
6Y1–24329–00	25 – 5
650–24351–51	25 – 12
61J–24360–00	25 – 10
692–24410–00	7 – 15
663–24411–00	7 – 20
692–24411–00	7 – 17
6A0–24412–02	7 – 26
6A0–24413–00	7 – 16
6A0–24421–01	7 – 24
650–24431–A0	7 – 27
	29 – 17
648–24434–01	7 – 18
648–24435–02	7 – 21
61N–24521–00	7 – 8
61N–24560–00	7 – 6
61N–24563–00	1 – 6
	7 – 7
61N–24566–10	7 – 11
6YJ–24610–01	25 – 2
61N–26311–01	16 – 21
61N–26326–00	15 – 18
6K8–41121–00–1S	3 – 31
6K8–41122–A1	3 – 32
	29 – 8
61N–41123–01–1S	3 – 33
6K8–41124–A1	3 – 36

PART NO. CODIGO Nº	REF. NO.
6K8–41124–A1	29 – 9
69P–41131–01–CA	22 – 5
69P–41131–11–CA	22 – 5
69P–41134–A0	22 – 6
	30 – 3
6A8–41135–00	22 – 12
	30 – 4
69P–41137–00–CA	22 – 8
69P–41138–00	22 – 10
	30 – 18
69P–41139–00	22 – 11
	30 – 19
69P–41213–10	17 – 11
682–41237–00	18 – 6
	19 – 3
662–41237–01	17 – 7
682–41238–01	18 – 5
	19 – 2
69P–41241–00	17 – 13
679–41241–01	17 – 9
689–41252–01	5 – 17
61N–41256–00	5 – 18
661–41262–02	5 – 19
682–41271–01	5 – 14
689–41273–00	5 – 15
6J8–41274–00	5 – 16
676–41611–00	9 – 17
689–41612–10	9 – 20
676–41613–00	9 – 18
61N–41615–00	10 – 1
69P–41631–10	17 – 2
689–42111–01–8D	16 – 2
69P–42112–00–8D	16 – 7
664–42119–00	16 – 10
656–42126–01	16 – 18
6G1–42137–20	16 – 13
689–42138–00	16 – 17
656–42153–10–8D	18 – 9
	19 – 6
69P–42154–01	17 – 14
69S–42157–10	18 – 8
	19 – 5
69P–42167–00	17 – 12
62Y–42171–00	17 – 15
6G1–42177–00	16 – 11
69P–42511–00–8D	21 – 4
689–42521–00–94	21 – 7
682–42525–00	11 – 17

PART NO. CODIGO Nº	REF. NO.
682–42525–00	12 – 17
	13 – 17
648–42528–00	21 – 1
60B–42610–10	2 – 1
69P–42610–10	2 – 1
69R–42610–50	2 – 1
69S–42610–50	2 – 1
69P–42613–10–8D	2 – 8
6G0–42615–00	2 – 3
69P–4261A–10	2 – 2
61N–42628–00	2 – 11
689–42647–00	2 – 4
6G0–42651–02	2 – 6
61N–42675–40	2 – 12
61R–42675–40	2 – 12
61N–42676–40	2 – 13
61R–42676–40	2 – 13
61T–42678–40	2 – 14
	2 – 15
6L2–42678–40	2 – 14
	2 – 15
61R–42681–00	2 – 17
	2 – 18
689–42711–05–8D	15 – 1
664–42715–00	17 – 19
69P–42716–00	21 – 24
65W–42717–00	22 – 2
69P–42717–00	21 – 23
689–42718–00	21 – 21
682–42724–00	15 – 15
61T–42724–40	15 – 15
676–42724–40	15 – 18
689–42724–50	12 – 14
	13 – 14
689–42725–01	15 – 16
6EE–42794–40	15 – 23
6G0–42796–00	15 – 5
689–42815–00	15 – 10
689–42816–00	15 – 13
689–43111–03–8D	20 – 1
689–43112–02–8D	20 – 2
6J8–43113–01	20 – 13
6F5–43114–00	20 – 6
648–43114–01	20 – 6
6G0–43116–00	20 – 5
6E0–43118–01	20 – 3
663–43118–01–8D	20 – 3
6J8–43131–01	20 – 8

PART NO. CODIGO Nº	REF. NO.
6E5–43145–01	26 – 9
6G5–43145–01	20 – 9
689–43160–00	20 – 18
689–43165–00	20 – 19
689–43191–00	20 – 14
689–43192–01	20 – 15
689–43311–03–8D	20 – 26
689–43373–01	21 – 2
689–43614–01	20 – 35
648–43615–00	20 – 36
689–43616–00	20 – 30
648–43617–00	20 – 33
69P–43625–00	21 – 48
689–43631–10	20 – 28
648–43642–00	20 – 31
689–43643–00	20 – 29
689–43681–10	20 – 40
689–44111–01–8D	17 – 23
664–44113–01	17 – 24
689–44121–01	17 – 31
689–44125–00	17 – 32
664–44142–00	17 – 26
69S–44143–00	17 – 36
61N–44146–00	17 – 40
61N–44150–00	23 – 59
61N–44150–10	23 – 59
61N–44150–30	23 – 59
664–44167–01	17 – 20
61N–44176–00	23 – 18
703–44189–20	28 – 36
703–44189–30	28 – 42
6X3–44191–00	2 – 16
	28 – 47
61N–44194–01	10 – 2
61T–44194–01	10 – 2
69P–44311–01	23 – 10
	30 – 21
69P–44322–00	23 – 12
	30 – 23
69P–44322–40	23 – 12
	30 – 30
61N–44323–00	23 – 15
	30 – 26
61N–44323–40	23 – 15
	30 – 31
65W–44328–11	23 – 17
6H4–44352–02	23 – 13
	30 – 24

NUMERICAL INDEX
INDICE NUMERICO

PART NO. CODIGO Nº	REF. NO.
61N–44361–00	24 – 1
61N–44361–10	24 – 1
61N–44361–30	24 – 1
61N–44362–00	23 – 7
61N–44362–10	23 – 7
	23 – 57
689–44366–00	24 – 2
	30 – 5
6L2–44367–00	23 – 11
	30 – 7
	30 – 22
664–44514–00	21 – 33
689–44516–00	21 – 29
69P–44518–00–CA	21 – 14
648–44519–00	21 – 16
689–44551–01–8D	21 – 39
689–44552–01–8D	21 – 41
689–44553–00	21 – 36
689–44555–00	21 – 40
689–44557–00	21 – 37
648–44591–A0	21 – 28
	21 – 32
664–44591–A0	21 – 34
69P–45111–00–8D	22 – 1
69P–45111–10–8D	22 – 1
689–45113–A1	3 – 41
	29 – 14
	30 – 2
61N–45127–00	23 – 24
	30 – 11
69P–45127–10	22 – 15
69P–45128–10	22 – 16
69P–45151–00–8D	21 – 45
69P–45159–10	22 – 18
61N–45211–31–8D	22 – 21
6L2–45214–00	24 – 8
6L2–45215–00	24 – 9
61N–45251–01	1 – 9
	23 – 29
69P–45300–03–8D	23 – 1
69P–45300–13–8D	23 – 1
69P–45300–33–8D	23 – 1
61N–45311–02–8D	23 – 2
61N–45315–00	23 – 25
	30 – 10
689–45318–00	22 – 22
61N–45321–00	23 – 19
61N–45331–00–CA	23 – 22

PART NO. CODIGO Nº	REF. NO.
688–45341–10	23 – 32
61N–45361–01–8D	23 – 50
61N–45371–00	24 – 6
61N–45375–00	22 – 19
61N–45510–00	23 – 34
61N–45510–10	23 – 34
61N–45510–30	23 – 34
61N–45536–00	23 – 5
61N–45551–00	23 – 36
61N–45560–10	23 – 40
6L2–45567–00	23 – 39
6L2–45567–10	23 – 39
6L2–45567–20	23 – 39
6L2–45567–30	23 – 39
6L2–45567–40	23 – 39
61N–45571–00	23 – 48
6L2–45577–00	23 – 49
6L2–45577–10	23 – 49
6L2–45577–20	23 – 49
6L2–45577–30	23 – 49
61N–45587–00	23 – 4
61N–45587–10	23 – 4
61N–45587–20	23 – 4
61N–45587–30	23 – 4
61N–45587–40	23 – 4
61N–45587–50	23 – 4
61N–45587–60	23 – 4
61N–45587–70	23 – 4
65W–45611–00	23 – 41
6FM–45631–00	23 – 43
648–45633–11	23 – 45
648–45635–00	23 – 42
62C–45941–00	24 – 17
664–45941–01	24 – 17
664–45943–01	24 – 17
664–45945–00	24 – 17
664–45947–01	24 – 17
664–45949–02	24 – 17
664–45952–00	24 – 17
664–45954–01	24 – 17
6L2–45987–01	24 – 12
689–45997–00	24 – 13
69P–47467–00–CA	22 – 14
69P–47467–10–CA	22 – 14
703–48128–10	28 – 39
703–48129–00	28 – 41
703–48152–10	28 – 6
703–48153–00	28 – 60

PART NO. CODIGO Nº	REF. NO.
703–48189–00	28 – 19
703–48198–00	28 – 16
703–48211–10	28 – 25
703–48212–10	28 – 26
703–48213–10	28 – 27
703–48215–10	28 – 46
703–48219–10	28 – 34
703–48221–10	28 – 28
703–48222–30	28 – 31
703–48223–10	28 – 32
703–48225–10	28 – 33
703–48227–00	28 – 30
703–48230–21	27 – 1
	28 – 1
703–48232–00	28 – 2
703–48234–00	28 – 20
703–48235–00	28 – 5
703–48236–00	28 – 18
703–48238–00	28 – 24
703–48243–00	28 – 17
703–48244–00	28 – 23
703–48245–00	28 – 13
703–48246–00	28 – 29
701–48248–00	28 – 15
703–48252–00	28 – 14
703–48261–11	28 – 4
703–48264–00	28 – 8
703–48265–10	28 – 11
703–48268–00	28 – 7
703–48271–00	28 – 3
703–48281–00	28 – 35
703–48284–00	28 – 57
701–48287–00	28 – 45
703–48293–10	28 – 44
701–48320–20	27 – 2
701–48320–50	27 – 2
648–48330–50	18 – 24
	19 – 21
617–48331–91	18 – 25
	19 – 22
648–48340–50	18 – 18
	19 – 15
703–48345–01	28 – 21
648–48346–50	18 – 26
	19 – 23
617–48346–90	18 – 20
	19 – 17
703–48358–00	28 – 22

PART NO. CODIGO Nº	REF. NO.
617–48361–91	18 – 19
	19 – 16
69R–48501–00	19 – 1
69R–48501–10	19 – 1
700–48510–12	19 – 27
689–48511–02	18 – 1
	19 – 28
689–48531–51	18 – 16
	19 – 13
689–48532–51	18 – 14
	19 – 11
648–48534–50–8D	18 – 12
	19 – 9
689–61350–02	26 – 1
689–61351–01	26 – 2
6E5–61355–00	26 – 7
61N–81313–09	9 – 4
6E9–81328–70	9 – 7
689–81800–13	14 – 1
689–81807–12	14 – 3
689–81809–11	14 – 7
689–81810–11	14 – 9
689–81811–11	14 – 12
689–81812–11	14 – 11
689–81813–10	14 – 13
689–81820–11	14 – 14
689–81826–10	14 – 15
689–81830–11	14 – 4
689–81831–00	14 – 5
689–81840–11	14 – 10
689–81847–11	14 – 6
689–81850–12	14 – 8
689–81857–11	14 – 2
689–81870–00	11 – 14
6H3–81922–00	10 – 14
6G1–81941–10	11 – 3
	12 – 2
	13 – 2
61T–81945–01	11 – 5
	12 – 4
	13 – 4
6G1–81952–00	11 – 4
	12 – 3
	13 – 3
664–81970–62	11 – 7
	12 – 6
	13 – 6
689–81971–00	11 – 2

PART NO. CODIGO Nº	REF. NO.
6EE–81994–40	5 – 22
6EE–81995–40	8 – 45
6AG–81996–00	5 – 23
689–82105–14	11 – 15
	12 – 13
	13 – 13
682–82150–10	11 – 10
	12 – 9
	13 – 9
663–82151–00	11 – 11
	12 – 10
	13 – 10
61N–82317–00	10 – 5
66T–82370–00	10 – 22
663–82370–01	10 – 22
6G1–82370–21	10 – 22
703–82510–34	28 – 48
61N–82519–01	10 – 9
703–82531–00	28 – 51
689–82531–02	11 – 6
	12 – 5
	13 – 5
6K1–82532–00	28 – 50
703–82540–00	28 – 55
689–82540–01	11 – 12
	13 – 28
682–82556–00	15 – 20
	28 – 53
61T–82560–00	12 – 28
	13 – 30
688–82575–02	28 – 52
6E9–82575–02	15 – 19
703–82577–00	28 – 49
689–8257Y–00	15 – 21
61T–82580–00	12 – 11
	13 – 11
688–82586–21	28 – 54
61T–82588–00	12 – 29
	13 – 31
61T–82590–00	12 – 12
	13 – 12
703–82591–00	28 – 58
703–82592–00	28 – 59
689–82594–00	11 – 16
689–82594–10	12 – 16
	13 – 16
703–83383–11	28 – 56
6E9–85516–70	9 – 9

PART NO. CODIGO Nº	REF. NO.
663–85518–00	17 – 10
61N–85537–00	9 – 13
61N–85540–13	10 – 11
69P–85541–09	9 – 3
61N–85542–00	10 – 4
61N–85543–09	9 – 5
61N–85543–19	9 – 6
61N–85550–10	9 – 1
61T–85550–10	9 – 1
69P–85560–00	9 – 2
69P–85561–00	9 – 10
61N–85570–00	10 – 16
	10 – 19
6H5–85570–00	10 – 16
61N–85570–10	10 – 19
61T–86111–00	12 – 19
	13 – 19
61T–86112–00	12 – 22
	13 – 22
682–86116–00	12 – 20
	13 – 20
682–86117–00	12 – 21
	13 – 21
69P–W0001–00	29 – 1
69P–W0001–20	30 – 1
689–W0004–00	5 – 2
69P–W0078–00	1 – 10
	30 – 20
69P–W0078–0A	30 – 29
69P–W0084–01–8D	16 – 1
69P–W0090–00–1S	3 – 1
69S–W0090–00–1S	3 – 1
61N–W0093–00	29 – 18
61N–W1571–10	8 – 1
656–W2810–02	7 – 31
90101–08339	20 – 22
90105–06M07	17 – 25
	21 – 6
90105–06M08	21 – 25
90105–06M18	21 – 3
90105–08M10	8 – 32
90105–10M12	24 – 4
90109–06M12	20 – 7
90109–06M18	20 – 41
90116–10M33	22 – 20
90119–06024	22 – 17
90119–06025	8 – 30
90119–06M17	17 – 18

NUMERICAL INDEX
INDICE NUMERICO

PART NO. CODIGO Nº	REF. NO.
90119–06M23	8 – 40
90119–06M48	24 – 7
90119–06M73	15 – 14
90119–06M94	5 – 13
90119–06M95	10 – 7
90119–06MA0	3 – 39
90119–06MA2	3 – 23
	3 – 30
90119–06MA3	3 – 37
	8 – 27
	8 – 29
90119–06MA4	3 – 38
	8 – 29
90119–08009	3 – 3
90119–08015	3 – 24
90119–08061	21 – 47
90119–08M03	21 – 43
	21 – 43
90119–08M65	3 – 4
90149–14030	20 – 5
90151–05M05	24 – 10
90151–06M02	3 – 17
90152–05011	16 – 12
90157–05M19	25 – 4
90161–06M00	11 – 18
	12 – 18
	13 – 18
90170–09M03	26 – 5
90170–10M42	21 – 26
	21 – 31
90171–14013	24 – 15
90179–06M24	2 – 9
90179–10M03	22 – 24
90179–10M14	23 – 37
90179–16M05	9 – 15
90185–05002	24 – 11
90185–06062	16 – 20
90185–09M01	26 – 4
90185–10027	18 – 4
	19 – 31
90185–22043	20 – 10
90201–06416	17 – 5
90201–06M30	10 – 8
90201–08M87	15 – 4
90201–10M02	16 – 14
90201–10M20	26 – 3
90201–10M63	26 – 8
90201–16M44	9 – 16

PART NO. CODIGO Nº	REF. NO.
90201–20417	23 – 47
90201–20M27	4 – 23
90201–21567	3 – 27
90201–22M03	20 – 11
90201–28013	16 – 5
90201–50306	3 – 40
90202–06007	17 – 28
	17 – 37
90202–10024	17 – 34
90206–05005	8 – 42
90206–12052	15 – 11
90206–28001	16 – 6
90209–24M03	4 – 15
90209–47016	21 – 9
90240–05047	20 – 37
90243–04007	20 – 4
90243–04M01	20 – 4
90249–06M22	20 – 32
90250–05010	23 – 44
90266–04M00	2 – 7
90266–04M01	2 – 5
90280–03M03	23 – 35
	30 – 28
90280–05015	9 – 14
90338–12009	15 – 17
90340–08002	23 – 27
90381–12M01	21 – 20
90386–08032	16 – 16
90386–10009	18 – 10
	19 – 7
90386–12069	15 – 12
90386–22M67	20 – 12
90386–38022	21 – 13
90386–38090	21 – 11
90386–47M22	21 – 10
90387–06013	8 – 41
90387–06119	10 – 6
90387–06289	17 – 17
90387–06M59	17 – 3
90387–08019	21 – 46
90387–08M25	15 – 3
90387–09019	20 – 23
90387–10M39	21 – 15
90387–10M42	26 – 6
90387–13003	16 – 3
90387–32002	4 – 16
90387–33001	16 – 4
90430–08003	1 – 8

PART NO. CODIGO Nº	REF. NO.
90430–08003	23 – 28
	23 – 33
	30 – 13
90445–09068	3 – 35
90445–09M75	7 – 4
90445–11M05	25 – 11
90445–11M06	25 – 9
90445–22002	21 – 49
90446–10M02	11 – 13
	13 – 29
90465–06M88	5 – 21
90465–13M11	10 – 15
90465–18147	12 – 27
	13 – 27
90467–08004	7 – 5
	7 – 14
	7 – 30
90480–10155	12 – 23
	13 – 23
90480–14M14	2 – 10
90480–15M06	15 – 2
90480–17165	12 – 15
	13 – 15
90480–17M08	11 – 1
	12 – 1
	13 – 1
	15 – 22
90480–25161	10 – 20
90480–29045	21 – 5
90501–09M08	17 – 22
90501–10065	23 – 46
90501–10071	18 – 28
	19 – 25
90501–10227	8 – 35
90501–10264	18 – 22
	19 – 19
90501–14M07	17 – 21
90501–23215	16 – 15
90502–10M07	20 – 21
90506–16M17	20 – 42
90506–30M27	20 – 39
90508–14M13	17 – 33
91490–12010	17 – 29
91490–16010	8 – 44
	17 – 16
	17 – 27
	20 – 38
91490–20010	17 – 39

PART NO. CODIGO Nº	REF. NO.
91490–30022	24 – 16
91490–30025	22 – 13
91690–30008	20 – 20
91690–30012	18 – 21
	18 – 27
	19 – 18
	19 – 24
91690–30016	20 – 16
91690–40016	17 – 35
91690–40018	18 – 11
	19 – 8
91690–40035	20 – 43
91690–40048	5 – 20
92903–05600	8 – 43
92903–06600	5 – 9
92903–08600	14 – 18
92990–05100	7 – 23
92990–05600	17 – 30
	17 – 38
92990–06300	23 – 31
92990–08600	15 – 8
	18 – 23
	18 – 29
	19 – 20
	19 – 26
	20 – 24
	28 – 38
92990–10200	21 – 27
	21 – 35
92990–14200	24 – 14
92995–06600	3 – 11
	21 – 19
92995–10600	18 – 3
	19 – 30
	22 – 25
	24 – 5
93101–16001	3 – 8
	29 – 3
93101–20M07	23 – 54
	30 – 15
93101–22067	23 – 26
	30 – 12
93102–25008	3 – 7
	29 – 2
93102–32M07	4 – 7
93210–03261	12 – 26
	13 – 26
93210–06ME6	23 – 20

PART NO. CODIGO Nº	REF. NO.
93210–06ME6	30 – 9
93210–08287	25 – 14
	25 – 16
93210–16275	26 – 10
93210–22164	23 – 8
	30 – 17
93210–26130	23 – 9
	23 – 9
	23 – 58
	30 – 6
93210–32738	1 – 7
	7 – 9
	29 – 16
93210–37160	21 – 12
93210–40659	5 – 12
	29 – 12
	29 – 27
93210–45161	23 – 14
	30 – 8
	30 – 25
93210–46M16	4 – 8
93210–58M21	3 – 9
	29 – 4
93210–64ME7	23 – 52
	30 – 14
93210–65M50	23 – 55
	30 – 16
93306–00612	23 – 51
93306–305U3	4 – 9
93310–62406	4 – 14
93315–22004	23 – 53
93315–220V7	23 – 6
93332–00005	23 – 38
93332–000W5	23 – 3
93390–00009	4 – 17
93399–99951	4 – 6
93430–06024	28 – 12
93440–62057	4 – 11
93602–20M02	4 – 21
93604–10M03	23 – 23
93606–11M24	22 – 23
	24 – 3
93606–12019	3 – 5
	21 – 17
	22 – 3
93608–12063	21 – 8
93700–06M03	20 – 17
	20 – 27

PART NO. CODIGO Nº	REF. NO.
93700–06M03	21 – 22
94702–00160	1 – 5
	3 – 42
94702–00217	1 – 5
	3 – 42
94702–00247	1 – 5
	3 – 42
94702–00271	1 – 5
	3 – 42
95303–08700	8 – 12
95380–03600	7 – 19
95380–05600	18 – 7
	19 – 4
	28 – 9
95380–05700	17 – 8
95380–06600	8 – 25
	8 – 25
	17 – 41
	28 – 43
95380–08600	7 – 10
	20 – 25
	21 – 42
95380–08700	15 – 7
	15 – 9
95895–06035	23 – 30
97013–06014	7 – 12
97013–06050	5 – 8
97013–08012	14 – 17
97013–08030	8 – 10
97075–10040	18 – 2
	19 – 29
97095–06010	8 – 37
97095–06012	17 – 6
97095–06018	21 – 18
97095–06020	16 – 19
97095–06022	3 – 10
97095–06045	17 – 4
97095–08110	21 – 50
97380–05025	28 – 10
97380–08030	28 – 37
97513–06516	3 – 15
97513–06525	5 – 6
97513–06535	5 – 7
	5 – 7
97513–08530	14 – 16
97575–06520	23 – 56
97575–08525	21 – 38
97575–08530	22 – 4

NUMERICAL INDEX
INDICE NUMERICO

PART NO. CODIGO Nº	REF. NO.
97585–08540	15 – 6
97590–06512	10 – 10
	10 – 13
	10 – 18
	11 – 9
	12 – 8
	13 – 8
97595–06510	10 – 3
97595–06512	18 – 13
	19 – 10
97595–06516	8 – 20
	18 – 15
	18 – 17
	19 – 12
	19 – 14
97595–06520	7 – 3
	10 – 12
	10 – 17
	10 – 21
	16 – 9
	21 – 30
97595–06525	23 – 21
97595–06535	8 – 22
	8 – 24
97595–06540	7 – 28
	23 – 16
	30 – 27
97595–06550	16 – 8
97595–08520	22 – 9
97595–08565	21 – 44
	21 – 44
97607–04112	9 – 11
97607–06125	9 – 12
97802–04006	9 – 8
97880–05012	12 – 25
	13 – 25
97880–06010	9 – 21
97880–06016	22 – 7
97890–05006	6 – 22
97980–04110	6 – 8
97980–04112	6 – 16
97980–05212	9 – 19
97980–05225	11 – 8
	12 – 7
	13 – 7
98503–04006	12 – 24
	13 – 24
98503–05028	7 – 22

PART NO. CODIGO Nº	REF. NO.
98580–04006	28 – 40
98980–04006	6 – 17
99009–17500	12 – 30
	13 – 32
99080–05600	20 – 34
99530–10014	8 – 23

PART NO. CODIGO Nº	REF. NO.

PART NO. CODIGO Nº	REF. NO.

PART NO. CODIGO Nº	REF. NO.

PART NO. CODIGO Nº	REF. NO.