YAMAHA

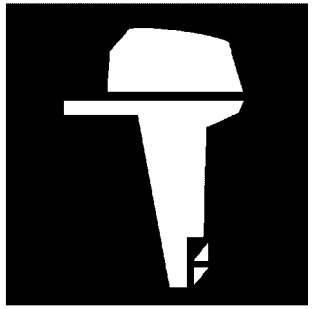

零件目录
PARTS CATALOGUE

E8DMH’17 (677H)

YAMAHA
GENUINE
Parts & Accessories

1R677-415MA

( )

前言

本零件目录记载着封面页所示型号所使用的零件。 当您要订购更换零件时，请参阅本零件目录并正确指示零件号码和零件名称。

1. 零件目录发行后有变更或附加零件时，将会以雅马哈零件信息通知大家。
   建议您应按照雅马哈零件信息修改本零件目录。

2. 省略记号
   本文中所记载的省略记号的意思如下。
   “UR” 需要指定的零件号码。
   “UN” 需要数。
   “AP” 选购品
   “LM” 当地制造（ 必需于当地订购的零件）
   “F#” 车架号（ 适用的机器号）
   “O/S” 超过尺寸

3. 组件中部件的数量
   - 组件的销售零件，如下所示，在零件名称的前面加上（.）的记号来表示。
   - 每个部件右侧的数字表示各组件单体内该部件的数量。

零件号码	零件名称	数量	备注
2F5－83310－60	前闪光灯组合	2	
115－83311－60	.灯泡 (6V－18W)	1	

4. 适用的图形颜色表示在“备注”中，如下所示。

零件号码	零件名称	数量	备注
2N4－24110－00－X5	燃油箱组件	2	MXR
3J1－24240－10	.燃油箱图形	1	适用于MXR

5. 请注意插图只用于找寻零件号码时参照，并不适用于组装。 组装时，请使用适用的维修手册。

6. 在参照号码前的星号（*）表示其为在第一版后更改的项目。

7. 适用的系列号码
   发动机系列号码

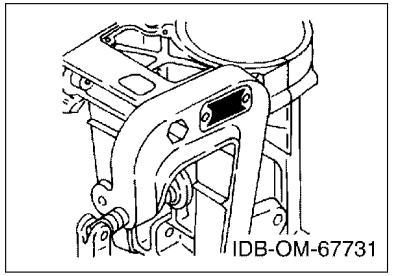

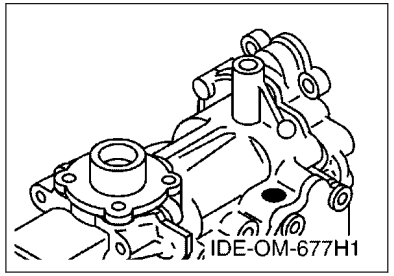

8. 适用的发动机初始系列号码

型号	系列号码	型号	系列号码
E8D	677K-1023865		

9. 适用的颜色记号

省略记号	颜色名称（英文）	颜色名称	颜色记号
DBN1	DARK BLUISH GRAY 1		008D

10. 数量栏信息

栏号	数量栏名称	适用型号
1	677H	E8DMH

CONTENTS

SCHEDULED SERVICE PARTS.....1
TOP COWLING.....2
CYLINDER & CRANKCASE.....3
CRANKSHAFT & PISTON.....5
INTAKE.....6
CARBURETOR.....7
FUEL.....9
STARTER.....10
GENERATOR.....12
ELECTRICAL.....13
CONTROL.....14
REMO CON ATTACHMENT.....17
BRACKET.....18
UPPER CASING.....21
LOWER CASING & DRIVE 1.....22
LOWER CASING & DRIVE 2.....25
FUEL TANK.....26
OPTIONAL PARTS.....27
REPAIR KIT 1.....28
REPAIR KIT 2.....30

INDEX

NUMERICAL INDEX.....32

目录

定期更换零件 1
顶罩 2
气缸 & 曲轴箱 3
曲柄・活塞 5
进气门 6
化油器 7
燃油系统 9
起动器 10
发电机 12
电球 13
控制系统 14
遥控装置附件 17
托架 18
水上装置壳体 21
水下装置壳体 & 驱动系统 1 22
水下装置壳体 & 驱动系统 2 25
油箱 26
选购件 27
修理套件 1 28
修理套件 2 30

索引

零件号码索引 32

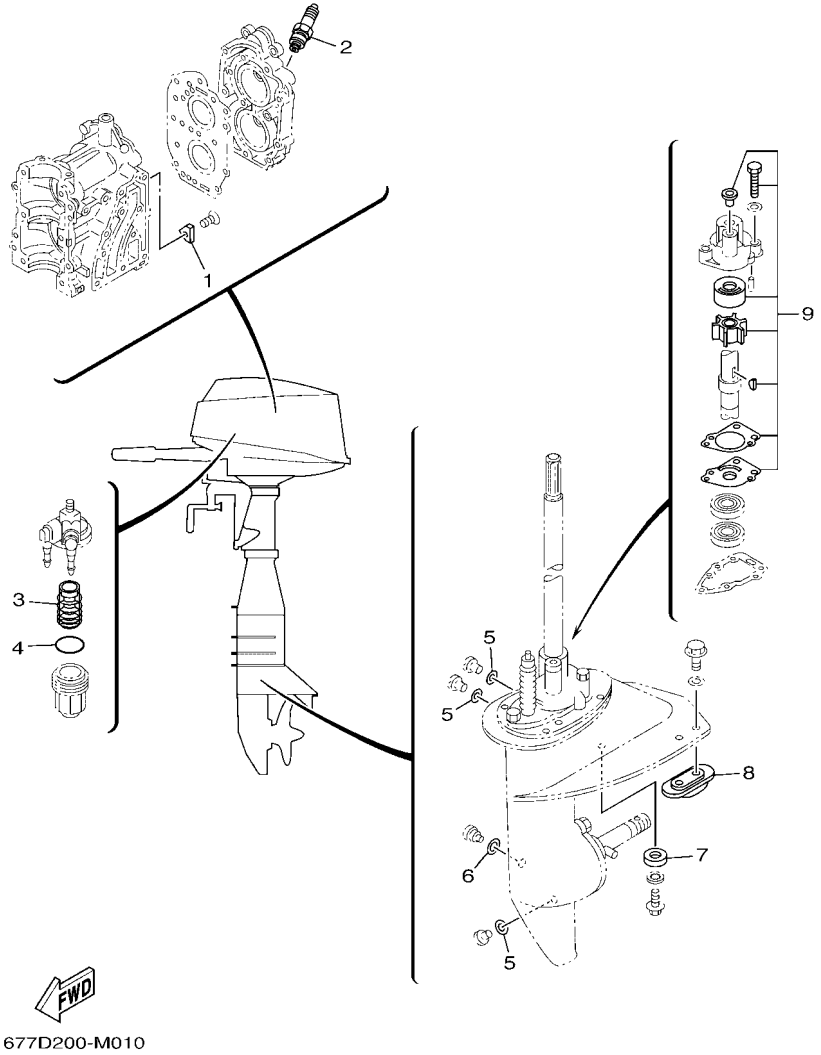

FIG. 1 SCHEDULED SERVICE PARTS 定期更换零件

REF. NO.	PART NO. 零件号码	DESCRIPTION 零件名称	H779					REMARKS 备注
1	664–11325–00	ANODE 阳极	1					
2	94702–00217	PLUG, SPARK (NGK B7HS-10) 火花塞	2					UR UR
	94702–00271	PLUG, SPARK (NGK BR7HS-10) 火花塞	2					UR FOR CAR,CHN UR CAR, CHN车用
3	61N–24563–00	ELEMENT, FILTER 过滤器滤	1					
4	93210–32738	O-RING 0型环	1					
5	90430–08003	GASKET 衬垫	3					
6	90430–06M03	GASKET 衬垫	1					
7	677–45251–00	ANODE 阳极	1					
8	6E0–45251–12	ANODE 阳极	1					
9	655–W0078–B0	WATER PUMP REPAIR KIT 水泵修理套	1					

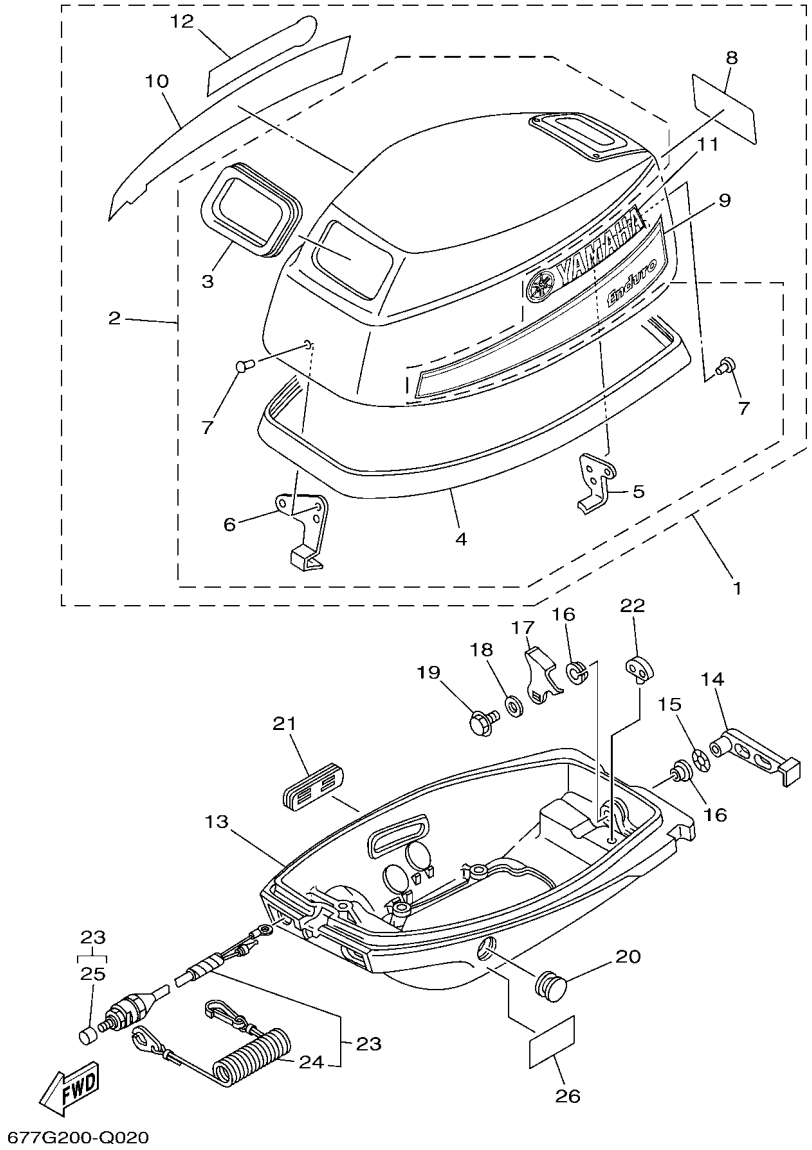

FIG. 2 TOP COWLING 顶罩

REF. NO.	PART NO. 零件号码	DESCRIPTION 零件名称	H779					REMARKS 备注
1	677–42610–10	TOP COWLING ASSY 顶罩组合	1					
2	677–4261A–00	.TOP COWLING W/O GRAPHICS . 顶罩组合	1					
3	677–15761–01	..SEAL, RUBBER 1 . . 橡皮密封圈1	1					
4	6G1–42615–00	..SEAL . . 密封	1					
5	677–42647–00	..HOLDER, CLAMP BAND . . 夹带支架	1					
6	677–42651–02	..HOOK . . 钩	1					
7	90266–04M04	..RIVET . . 铆钉	4					
8	6N0–42678–40	.GRAPHIC, REAR . 后图样	1					
9	677–42675–10	.GRAPHIC, SIDE 1 . 侧面图样1	1					
10	677–42676–10	.GRAPHIC, SIDE 2 . 侧面图样2	1					
11	6E0–42681–40	.MARK, COWLING . 罩标志	1					
12	6E0–42681–40	.MARK, COWLING . 罩标志	1					
13	677–42711–74–8D	COWLING, BOTTOM 1 底罩	1					
14	677–42815–00–8D	LEVER, CLAMP 1 夹杆	1					
15	90206–12052	WASHER, WAVE 波形垫圈	1					
16	90386–12069	BUSH 衬套	2					
17	656–42816–00	LEVER, CLAMP 2 夹杆	1					
18	90201–06068	WASHER, PLATE 平垫圈	1					
19	97595–06512	BOLT, WITH WASHER 带垫圈螺栓	1					
20	677–42724–00	GROMMET 固定	1					
21	677–42725–00	GROMMET 固定	1					
22	606–42591–00	HOLDER, SHEAR PIN 剪力安全销支架	1					
23	677–82575–20	ENGINE STOP SWITCH ASSY 发动机止动开关组合	1					
24	682–82556–00	.LANYARD, STOP SWITCH . 限位板减震	1					
25	689–8257Y–00	.CAP . 盖	1					
26	6EE–42794–40	LABEL, WARNING (GENERAL) 警告标志	1					

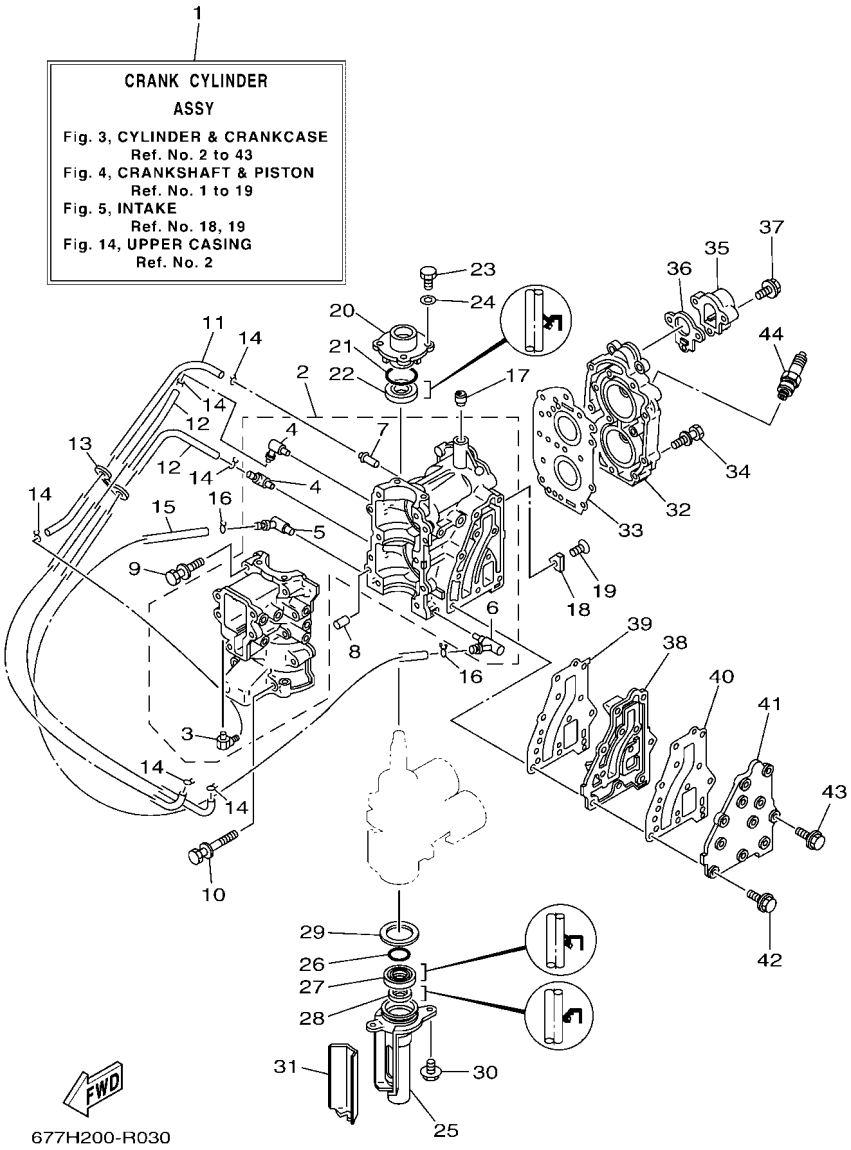

FIG. 3 CYLINDER & CRANKCASE 气缸 & 曲轴箱

REF. NO.	PART NO. 零件号码	DESCRIPTION 零件名称	677H					REMARKS 备注
1	677–W0090–06–1S	CRANK CYLINDER ASSY 气缸曲柄组合	1					
2	677–15100–03	CRANKCASE ASSY 曲轴箱组合	1					
3	650–11370–01	.CHECK VALVE ASSY . 单向阀组合	1					
4	646–11370–01	.CHECK VALVE ASSY . 单向阀组合	2					
5	677–11372–00	.NIPPLE, HOSE . 软管接头	1					
6	676–11372–00	.NIPPLE, HOSE . 软管接头	1					
7	624–14485–00	.PIPE, JOINT . 连接管	1					
8	93605–08041	PIN, DOWEL 定位销	2					
9	90119–06M15	BOLT, WITH WASHER 带垫螺栓	8					
10	90119–06M16	BOLT, WITH WASHER 带垫螺栓	2					
11	90445–07M02	HOSE (L167) 软管	1					
12	90445–07MA3	HOSE (L200) 软管	2					
13	90464–07015	CLAMP 线夹	1					
14	90467–06016	CLIP 卡环	6					
15	90445–10M03	HOSE (L240) 软管	1					
16	90467–09M09	CLIP 卡环	2					
17	99530–10014	PIN, DOWEL 定位销	1					
18	664–11325–00	ANODE 阳极	1					
19	90151–06M01	SCREW, COUNTERSUNK 沉头螺钉	1					
20	677–15359–00–94	HOUSING, OIL SEAL 油封壳	1					
21	93210–42159	O-RING 0型环	1					
22	93102–20M25	OIL SEAL 油封	1					
23	97095–06018	BOLT 螺栓	4					
24	92995–06600	WASHER 垫圈	4					
25	677–15396–01–CA	HOUSING, OIL SEAL 油封壳	1					
26	93210–42M70	O-RING 0型环	1					
27	93101–20M29	OIL SEAL 油封	1					

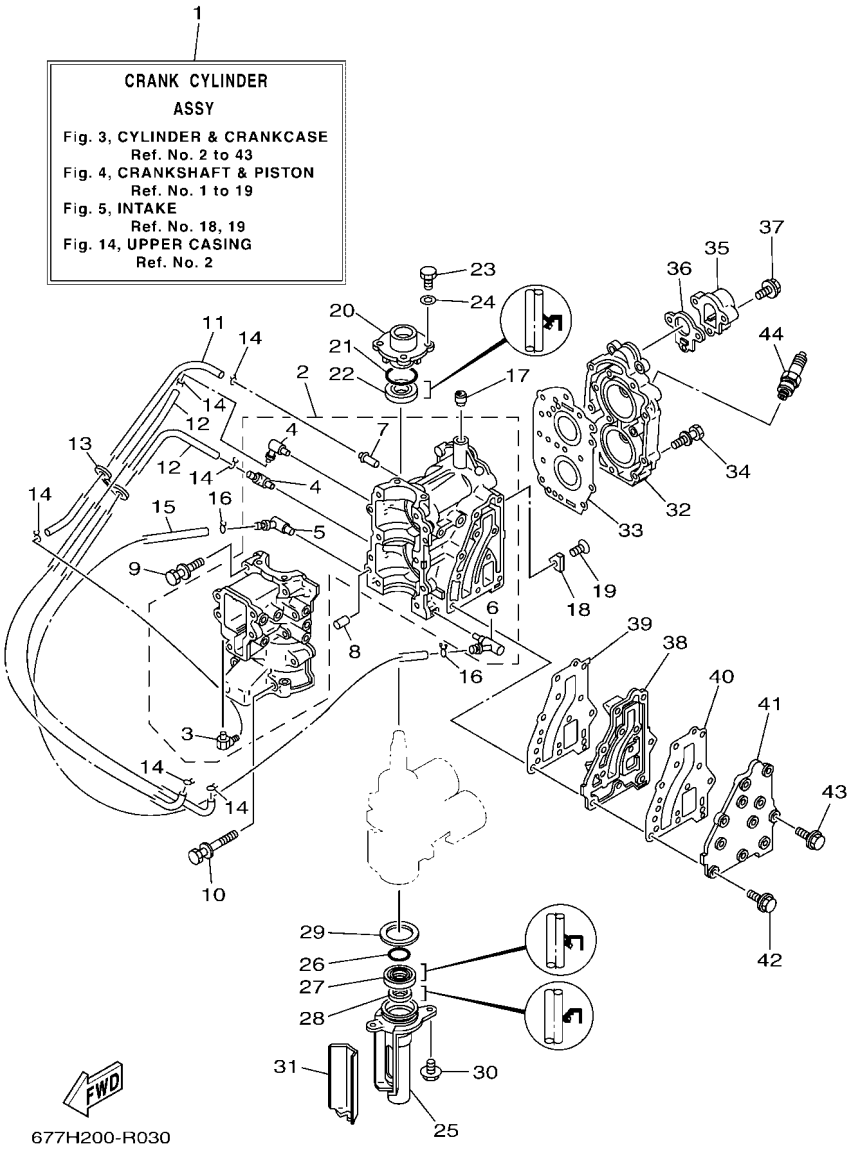

FIG. 3 CYLINDER & CRANKCASE 气缸 & 曲轴箱

REF. NO.	PART NO. 零件号码	DESCRIPTION 零件名称	677H					REMARKS 备注
28	93101–14M01	OIL SEAL 油封	1					
29	90201–41303	WASHER, PLATE 平垫圈	1					
30	97595–06516	BOLT, WITH WASHER 带垫圈螺栓	2					
31	677–15379–02	SEAL, CRANKCASE 曲轴箱密封	1					
32	677–11111–00–1S	HEAD, CYLINDER 1 气缸头1	1					
33	677–11181–A1	GASKET, CYLINDER HEAD 1 气缸头垫片1	1					
34	90119–06048	BOLT, WITH WASHER 带垫螺栓	13					
35	677–12413–00–1S	COVER, THERMOSTAT 温控器盖	1					
36	677–12414–A1	GASKET, COVER 盖衬垫	1					
37	90119–06MA3	BOLT, WITH WASHER 带垫螺栓	3					
38	677–41111–01–1S	INNER COVER, EXHAUST 排气管内盖	1					
39	677–41112–A2	GASKET, EXHAUST INNER COVER 排气管内盖衬垫	1					
40	677–41114–A1	GASKET, EXHAUST OUTER COVER 排气管外盖衬垫	1					
41	677–41113–01–1S	OUTER COVER, EXHAUST 排气管外盖	1					
42	90119–06MA4	BOLT, WITH WASHER 带垫螺栓	10					
43	90119–06023	BOLT, WITH WASHER 带垫螺栓	1					
44	94702–00217	PLUG, SPARK (NGK B7HS-10) 火花塞	2					
	94702–00271	PLUG, SPARK (NGK BR7HS-10) 火花塞	2					FOR CAR,CHN CAR, CHN车用

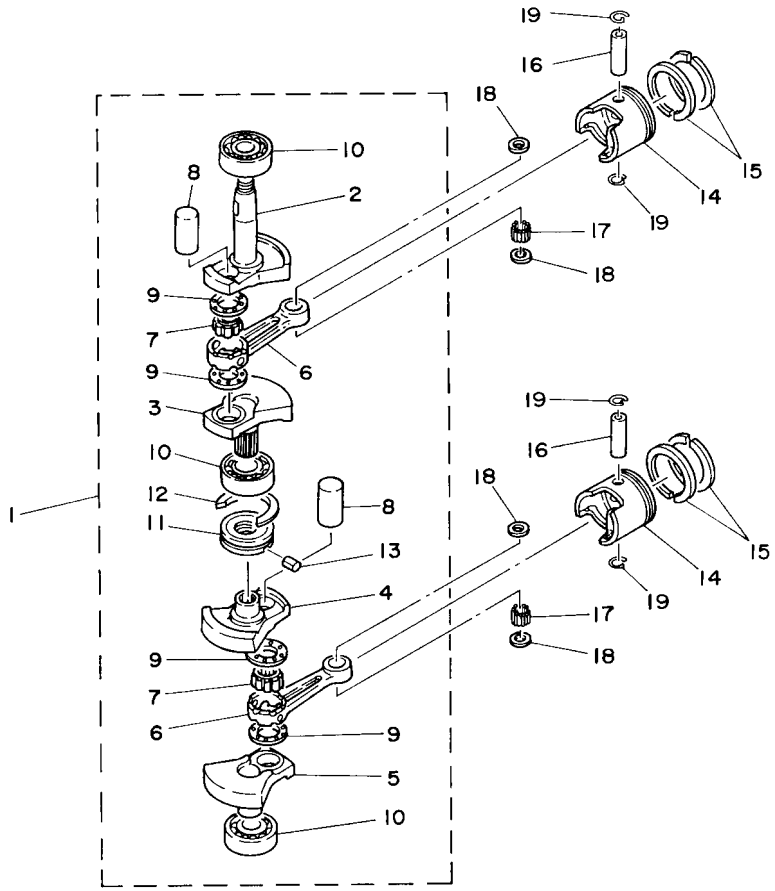

6770010-4030

FIG. 4 CRANKSHAFT & PISTON 曲柄・活塞

REF. NO.	PART NO. 零件号码	DESCRIPTION 零件名称	677H					REMARKS 备注
1	677–11400–02	CRANKSHAFT ASSY 曲轴组合	1					
2	677–11412–02	.CRANK 1 . 曲柄1	1					
3	677–11422–02	.CRANK 2 . 曲柄2	1					
4	677–11432–02	.CRANK 3 . 曲柄3	1					
5	677–11442–02	.CRANK 4 . 曲柄4	1					
6	6E0–11651–01	.ROD, CONNECTING . 连杆	2					
7	93310–418U0	.BEARING . 轴承	2					
8	6G1–11681–00	.PIN, CRANK 1 . 曲柄销1	2					
9	90209–18112	.WASHER . 垫圈	4					
10	93306–204U0	.BEARING . 轴承	3					
11	677–11515–01	.SEAL, LABYRINTH 1 . 曲折环式密封	1					
12	93440–47055	.CIRCLIP . 卡环	1					
13	91690–30010	.PIN, SPRING . 弹簧销	1					
14	677–11631–00–97	PISTON (STD) 活塞(STD)	2					
	677–11635–00	PISTON (0.25MM O/S) 活塞（0.25毫米 O/S）	2					AP AP
	677–11636–00	PISTON (0.50MM O/S) 活塞（0.50毫米 O/S）	2					AP AP
15	647–11610–00	PISTON RING SET (STD) 活塞环套	2					
	647–11610–10	PISTON RING SET (0.25MM O/S) 活塞环套	2					AP AP
	647–11610–20	PISTON RING SET (0.50MM O/S) 活塞环套	2					AP AP
16	6G1–11633–00	PIN, PISTON 活塞销	2					
17	93602–14118	PIN, DOWEL 定位销	56					
18	90201–12565	WASHER, PLATE 平垫圈	4					
19	93450–13022	CIRCLIP 卡环	4					

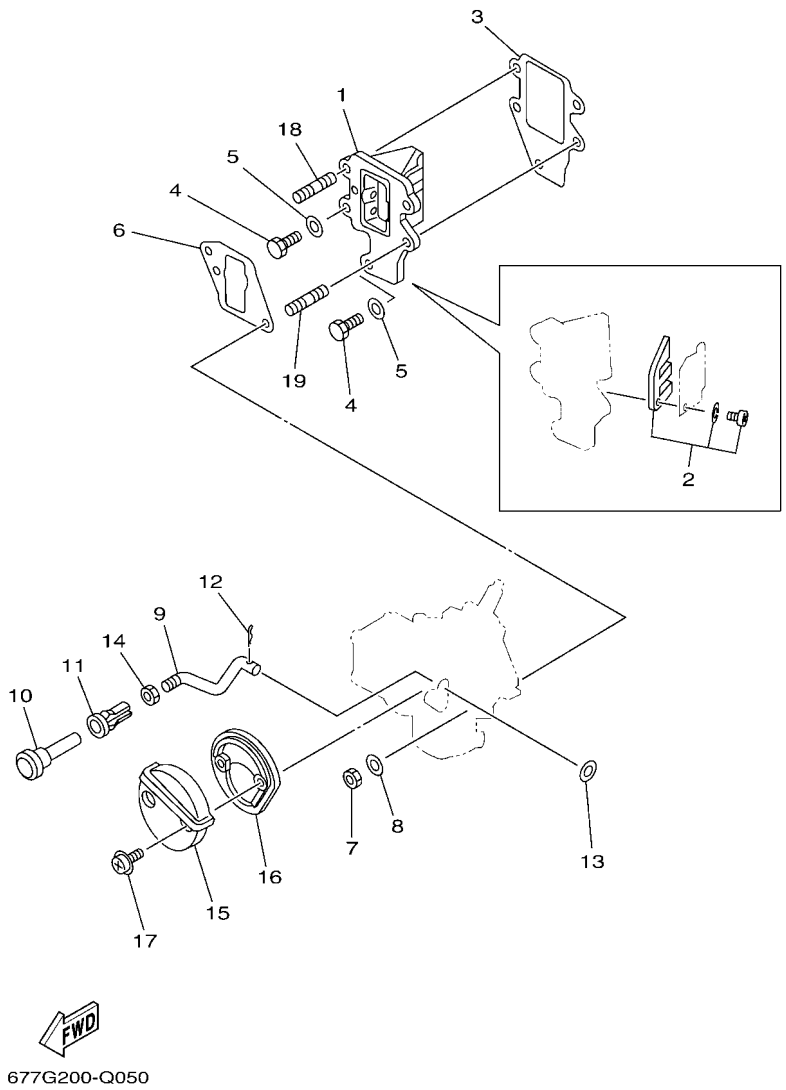

677G200-Q050

FIG. 5 INTAKE 进气门

REF. NO.	PART NO. 零件号码	DESCRIPTION 零件名称	H779					REMARKS 备注
1	677–13610–00	REED VALVE ASSY 簧片阀组合	1					
2	677–W0004–00	.REED SET . 簧片套	1					
3	677–13621–A1	GASKET, VALVE SEAT 阀座衬垫	1					
4	97013–06018	BOLT 螺栓	3					
5	92903–06600	WASHER, PLATE 面板垫圈	3					
6	677–14198–A1	GASKET 衬垫	1					
7	95380–06700	NUT 螺母	2					
8	92995–06600	WASHER 垫圈	2					
9	677–41256–00	ROD, CHOKE 1 阻风门杆1	1					
10	677–41271–01	KNOB, CHOKE 阻风门旋钮	1					
11	90480–14M02	GROMMET 橡胶垫	1					
12	90468–10004	CLIP 卡环	1					
13	92990–04600	WASHER, PLATE 面板垫圈	1					
14	95380–04700	NUT 螺母	1					
15	677–14431–00	SILENCER, INTAKE 1 进气消声器1	1					
16	677–14441–00	SILENCER, INTAKE 2 进气消声器2	1					
17	97980–05220	SCREW, WITH WASHER 带垫圈螺钉	2					
18	95627–06325	BOLT, STUD 双头螺栓	1					
19	90116–06M04	BOLT, STUD 双头螺拴	1					

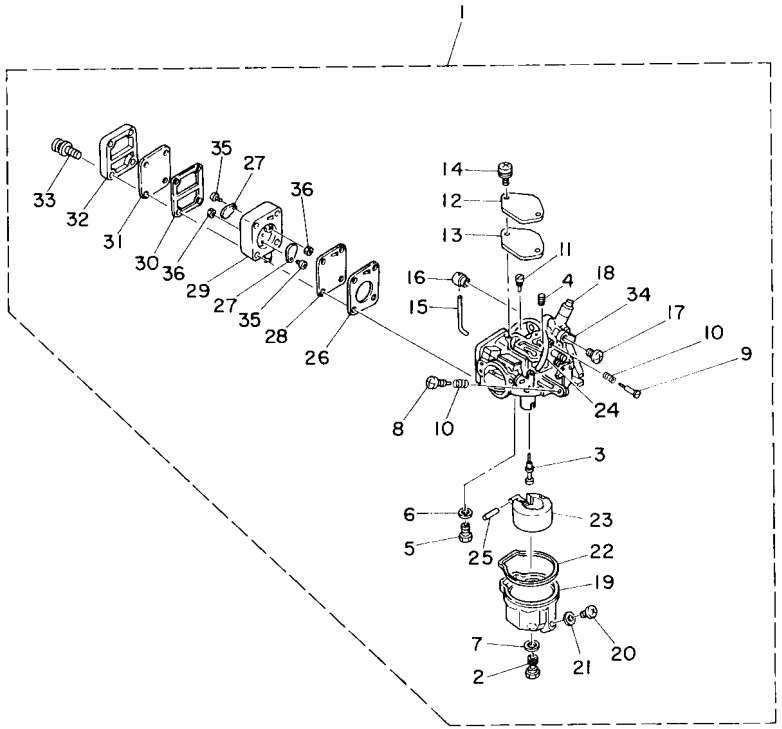

6770010-4050

FIG. 6 CARBURETOR 化油器

REF. NO.	PART NO. 零件号码	DESCRIPTION 零件名称	H779					REMARKS 备注
1	677–14301–08	CARBURETOR ASSY 1 化油器总成1	1					
2	677–14343–40	.JET, MAIN (# 80) . 主量孔（# 80）	1					
3	677–14341–00	.NOZZLE, MAIN . 主喷管	1					
4	647–14342–23	.JET, PILOT (# 46) . 低速量孔（# 46）	1					
5	6E8–14390–12	.NEEDLE VALVE ASSY . 针阀组合	1					
6	367–14195–00	.GASKET . 针阀垫	1					
7	1J2–14398–00	.GASKET . 衬垫	1					
8	664–14321–01	.SCREW, THROTTLE . 节气门螺钉	1					
9	648–14323–00	.SCREW, AIR ADJUSTING . 空气调整螺钉	1					
10	646–14212–01	.SPRING, PILOT ADJUSTING . 混合气调整弹簧	2					
11	647–14326–00	.SCREW, GUIDE . 导管螺钉	1					
12	677–14157–01	.COVER, MIXING . 混合器盖	1					
13	677–14227–01	.GASKET . 垫	1					
14	97980–04112	.SCREW, WITH WASHER . 带垫圈螺钉	2					
15	677–41241–00	.ROD, LINK . 连杆	1					
16	677–41226–00	.END, THROTTLE LEVER . 油门杆端部	1					
17	677–14327–01	.SCREW . 螺钉	1					
18	626–42658–00	.BUSHING . 衬套	1					
19	6E7–14381–00	.BODY, FLOAT CHAMBER . 浮子室本	1					
20	97890–04005	.SCREW, PAN HEAD . 大柱头螺钉	1					
21	655–14398–00	.GASKET . 衬垫	1					
22	677–14384–01	.GASKET, FLOAT CHAMBER . 浮子室衬垫	1					
23	6E7–14385–00	.FLOAT . 浮子	1					
24	367–14396–00	.PIPE . 管	1					
25	647–14386–10	.PIN, FLOAT . 浮子销	1					
26	677–24434–02	.GASKET, BODY . 本体衬垫	1					
27	6A0–24421–01	.VALVE, CHECK . 单向阀	2					

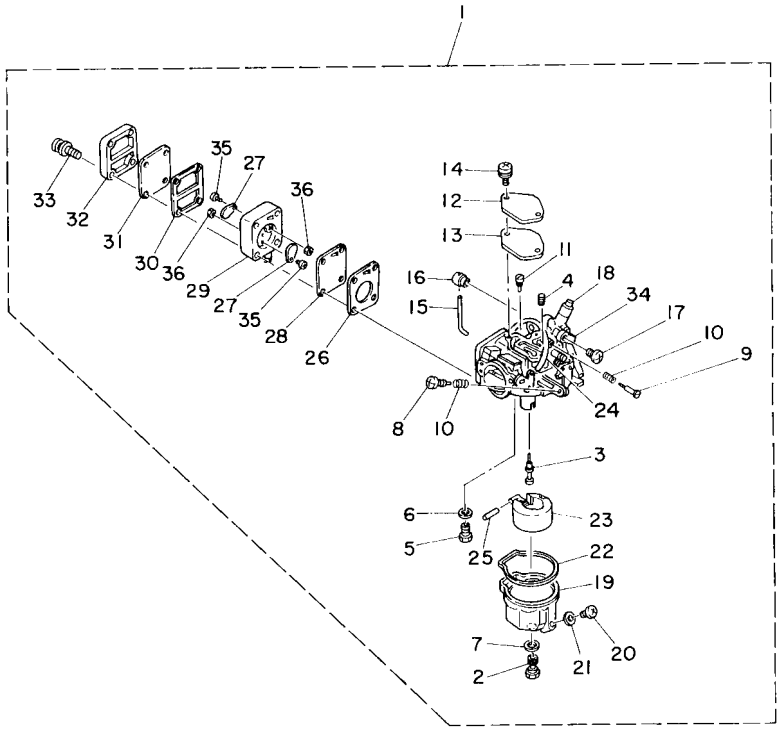

6770010-4050

FIG. 6 CARBURETOR 化油器

REF. NO.	PART NO. 零件号码	DESCRIPTION 零件名称	H779					REMARKS 备注
28	677–24411–02	.DIAPHRAGM . 隔板	1					
29	677–24412–02	.BODY 1 . 本体1	1					
30	677–24435–02	.GASKET, BODY 2 . 本体衬垫2	1					
31	677–24471–01	.DIAPHRAGM . 隔膜	1					
32	677–24413–01	.BODY 2 . 本体2	1					
33	677–24444–01	.SCREW . 螺钉	4					
34	677–41210–00	.ACCEL. ARM ASSY . 加速器臂组合	1					
35	6E7–14325–00	.SCREW, PAN HEAD . 扁头螺钉	2					
36	95380–03600	.NUT . 螺母	2					

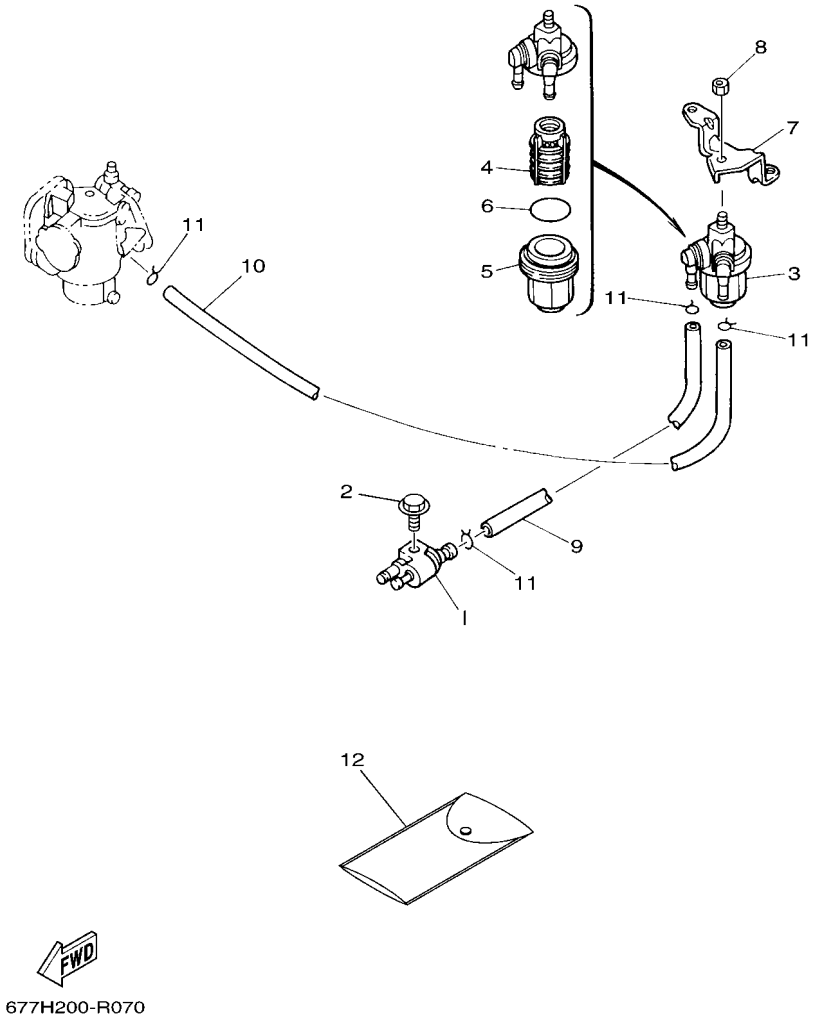

FIG. 7 FUEL 燃油系统

REF. NO.	PART NO. 零件号码	DESCRIPTION 零件名称	H779					REMARKS 备注
1	6G1–24304–10	FUEL PIPE JOINT COMP. 1 燃油管接头组件1	1					
2	97595–06520	BOLT, WITH WASHER 带垫圈螺栓	1					
3	61N–24560–00	FILTER ASSY 过滤器组合	1					
4	61N–24563–00	.ELEMENT, FILTER . 过滤器滤	1					
5	61N–24521–00	.CUP, FILTER . 滤杯	1					
6	93210–32738	.O-RING . 0型环	1					
7	6K3–24566–00	BRACKET, FILTER 过滤器托架	1					
8	95380–08600	NUT 螺母	1					
9	90445–09082	HOSE (L150) 软管	1					
10	90445–09163	HOSE (L235) 软管	1					
11	90467–08004	CLIP 卡环	4					
12	656–W2810–02	TOOL KIT 工具套	1					

FIG. 8 STARTER 起动器

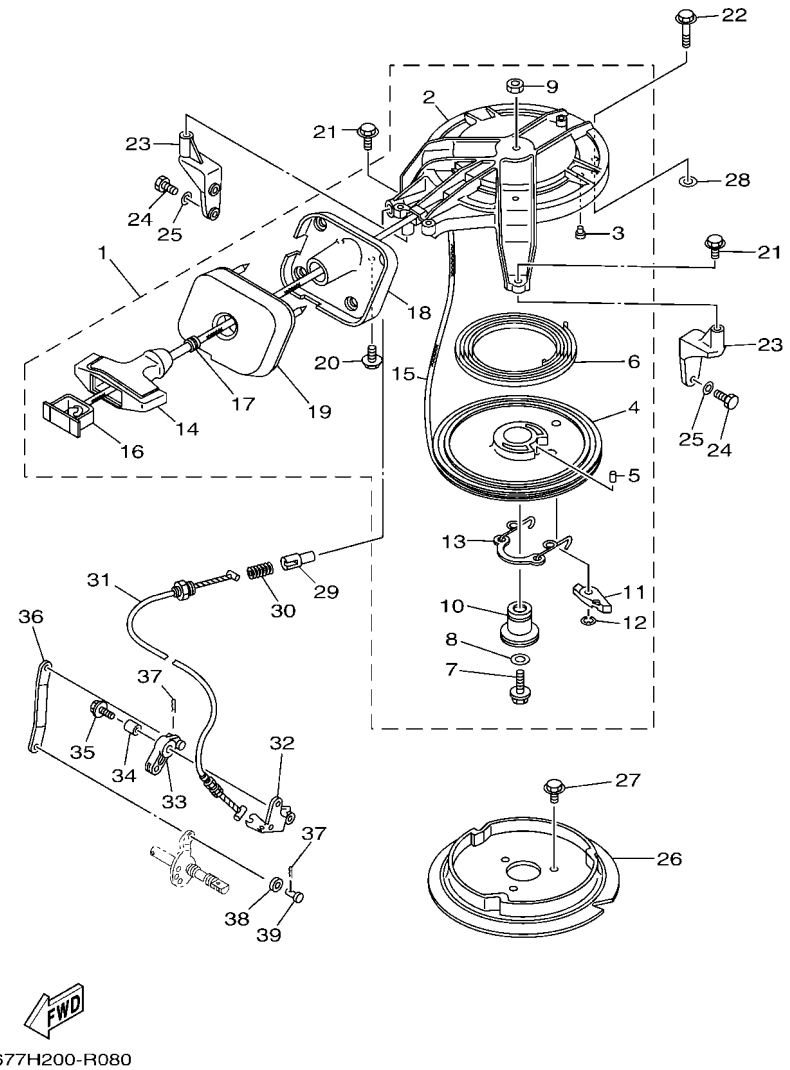

677H200-R080

*1:CUT FROM 50M ROLLS,PART NO.90890-44373,CUTTING LENGTH 1.65M

*1:CORTE DE UN RODILLO DE 50M , PARTS NUMERO 90890-44373, LARGO DEL CORTE 1.65M

REF. NO.	PART NO. 零件号码	DESCRIPTION 零件名称	677H					REMARKS 备注
1	677–15710–05	STARTER ASSY 起动器组合	1					
2	682–15711–71	.CASE, STARTER . 起动器箱	1					
3	648–15773–00	.STAY 3 . 支承3	1					
4	677–15714–00–94	.DRUM, SHEAVE . 拉索卷	1					
5	91690–40020	.PIN, SPRING . 弹簧销	1					
6	90510–08M04	.SPRING, SPIRAL . 螺旋弹簧	1					
7	90119–06M34	.BOLT, WITH WASHER . 带垫螺栓	1					
8	90201–06060	.WASHER, PLATE . 平垫圈	1					
9	95303–06600	.NUT . 螺母	1					
10	677–15717–01	.SHAFT, STARTER . 起动器轴	1					
11	677–15741–01	.PAWL, DRIVE . 驱动	1					
12	93430–06M02	.CIRCLIP . 卡环	1					
13	677–15705–02	.SPRING, DRIVE PAWL . 驱动爪弹簧	1					
14	689–15755–01	.HANDLE, STARTER . 起动器手	1					
15	*	.WIRE (L1650) . 钢丝，电线	1					*1 *1
16	6F5–15779–02	.COVER . 盖	1					
17	6A0–15789–00	.DAMPER . 减震器	1					
18	677–15758–01–94	.GUIDE, ROPE . 导向绳索	1					
19	677–15762–00	.SEAL, RUBBER 2 . 橡皮密封圈2	1					
20	97595–06516	.BOLT, WITH WASHER . 带垫圈螺栓	2					
21	97595–06520	BOLT, WITH WASHER 带垫圈螺栓	2					
22	97595–06535	BOLT, WITH WASHER 带垫圈螺栓	1					
23	6K3–15771–00–94	STAY 1 支承1	2					
24	97095–06018	BOLT 螺栓	4					
25	92995–06600	WASHER 垫圈	4					
26	6E7–15723–00–94	PULLEY, STARTER 起动器滑	1					
27	97595–06512	BOLT, WITH WASHER 带垫圈螺栓	3					

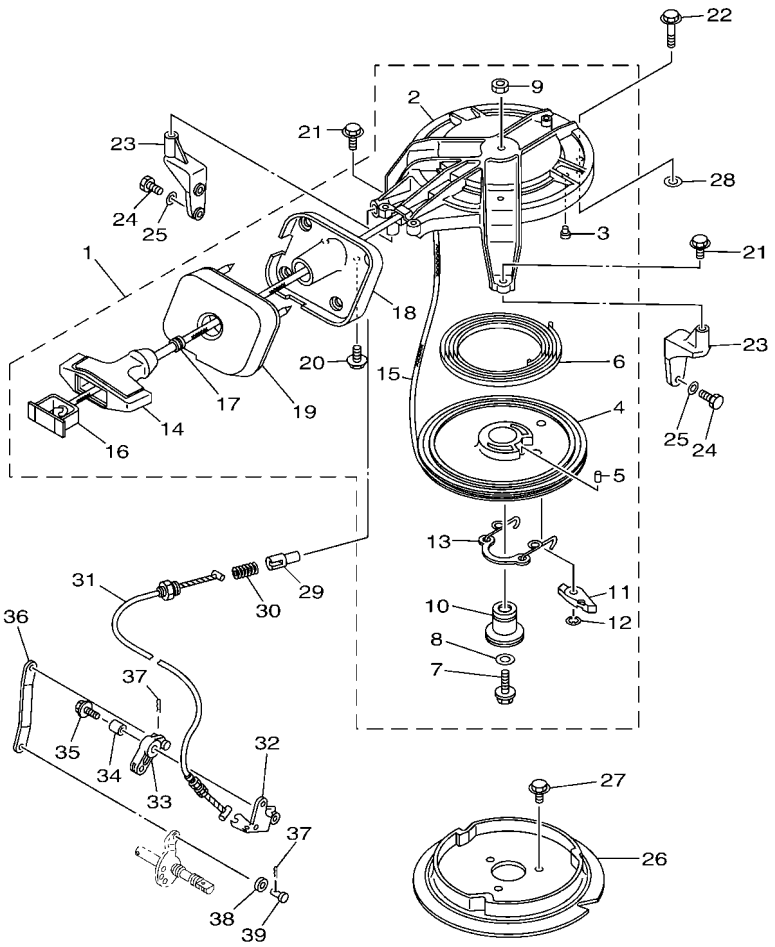

677H200-R080

*1:CUT FROM 50M ROLLS,PART NO.90890-44373,CUTTING LENGTH 1.65M

*1:CORTE DE UN RODILLO DE 50M , PARTS NUMERO 90890-44373, LARGO DEL CORTE 1.65M

FIG. 8 STARTER 起动器

REF. NO.	PART NO. 零件号码	DESCRIPTION 零件名称	H779					REMARKS 备注
28	90201–10120	WASHER, PLATE 平垫圈	1					
29	656–15748–00	PLUNGER, STARTER STOP 起动器止动柱	1					
30	90501–10227	SPRING, COMPRESSION 压簧	1					
31	677–15770–01	CABLE COMP., STARTER STOP 起动器止动钢索组	1					
32	677–15772–00	STAY 2 支承2	1					
33	677–15746–00	ARM 臂	1					
34	90387–06504	COLLAR 轴套	1					
35	90119–06M87	BOLT, WITH WASHER 带垫螺栓	1					
36	677–15747–00	LINK 连杆	1					
37	90468–10005	CLIP 卡环	2					
38	90202–05088	WASHER, PLATE 平垫圈	1					
39	647–41652–00	SET PIN 定位销，固定销	1					

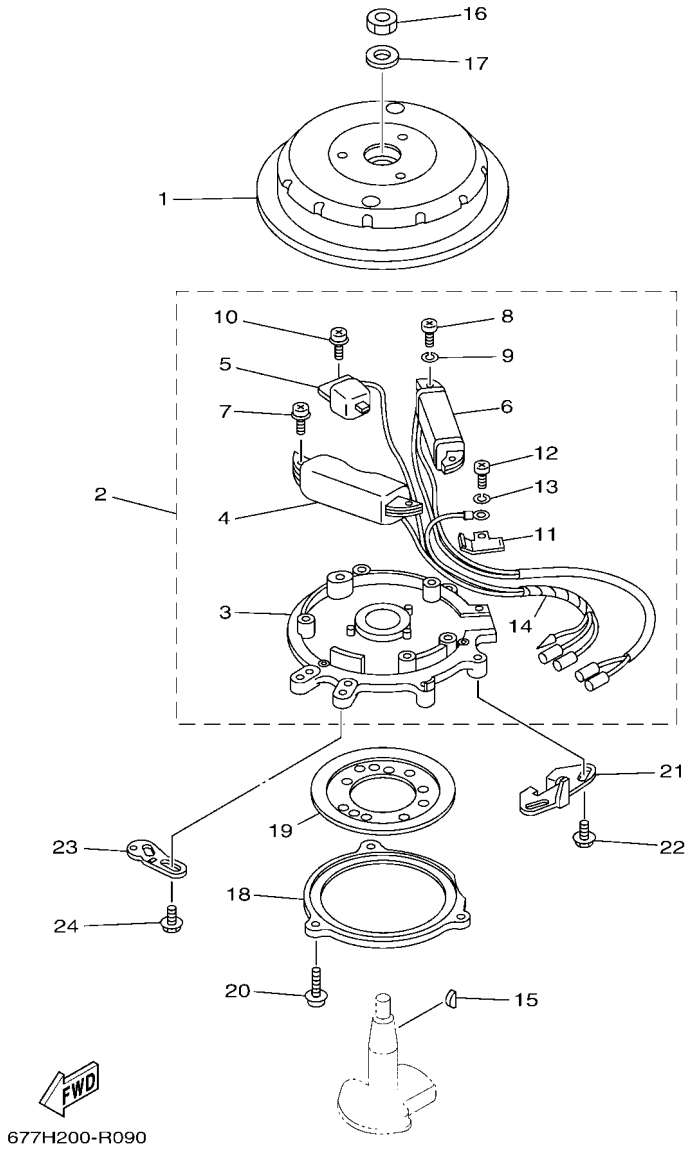

FIG. 9 GENERATOR 发电机

REF. NO.	PART NO. 零件号码	DESCRIPTION 零件名称	677H					REMARKS 备注
1	6G1–85550–72	ROTOR ASSY 转子组合	1					
2	6K3–85560–40	BASE ASSY 基座组合	1					FOR CAR,AFR,IND,OTH CAR, AFR, IND, OTH车用
	6K3–85560–70	BASE ASSY 基座组合	1					FOR CHN,OTH CHN, OTH车用
3	6K3–85509–70	.BASE, MAGNETO . 磁电机座	1					
4	6E7–85520–70	.COIL, CHARGE . 充电线	1					
5	6E7–85580–70	.COIL, PULSER . 脉冲线	1					
6	6E7–85533–40	.COIL, LIGHTING . 照明线	1					FOR 6K3-85560-40 6K3-85560-40车用
7	90159–05039	.SCREW, WITH WASHER . 带垫螺钉	2					
8	97802–05020	.SCREW, PAN HEAD . 大柱头螺钉	2					FOR 6K3-85560-40 6K3-85560-40车用
9	92902–05100	.WASHER, SPRING . 弹簧垫圈	2					FOR 6K3-85560-40 6K3-85560-40车用
10	90159–05038	.SCREW, WITH WASHER . 带垫螺钉	1					
11	6G1–85548–70	.HOLDER . 支架	2					
12	97802–04008	.SCREW, PAN HEAD . 大柱头螺钉	1					
13	92902–04100	.WASHER, SPRING . 弹簧垫圈	1					
14	6G1–85515–70	.LEAD WIRE ASSY . 导线组合	1					
15	90280–04M06	KEY, WOODRUFF 半圆键	1					
16	90170–10113	NUT 螺母	1					
17	90201–10126	WASHER, PLATE 平垫圈	1					
18	677–41611–00–94	RETAINER, MAGNETO BASE 磁电机座挡	1					
19	677–41612–00	RETAINER, MAGNETO BASE 磁电机座挡	1					
20	97985–05210	SCREW, WITH WASHER 带垫圈螺钉	3					
21	677–41615–10	STOPPER, MAGNETO BASE 磁电机座限位板	1					
22	97595–06516	BOLT, WITH WASHER 带垫圈螺栓	2					
23	677–41213–00–94	CAM, ACCEL. 加速器凸	1					
24	97595–05514	BOLT, WITH WASHER 带垫圈螺栓	2					

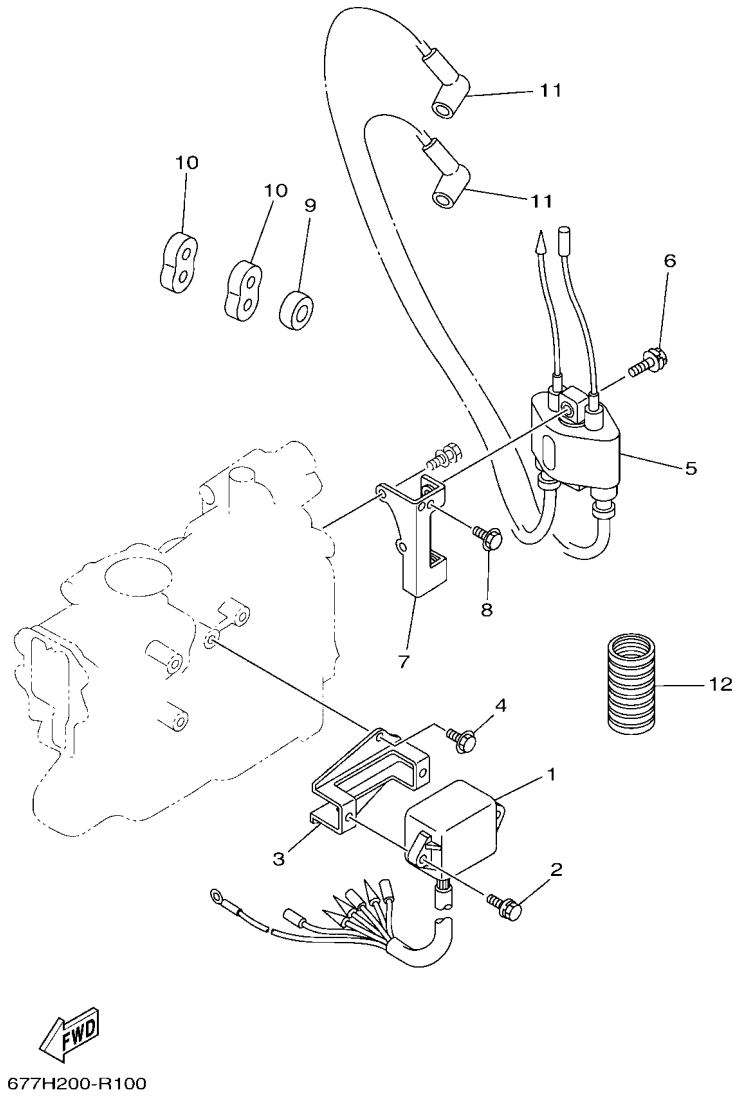

FIG. 10 ELECTRICAL 电球

REF. NO.	PART NO. 零件号码	DESCRIPTION 零件名称	677H					REMARKS 备注
1	696–85540–12	C.D.I. UNIT ASSY CDI总成	1					
2	90119–06M19	BOLT, WITH WASHER 带垫螺栓	2					
3	6K3–85525–01	COVER 盖	1					
4	97595–06516	BOLT, WITH WASHER 带垫圈螺栓	2					
5	6G1–85570–02	IGNITION COIL ASSY 点火线圈组合	1					
6	97595–06625	BOLT, WITH WASHER 带垫圈螺栓	2					
7	6K3–85542–01	BRACKET 托架	1					
8	97595–06510	BOLT, WITH WASHER 带垫圈螺栓	1					
9	90480–25161	GROMMET 橡胶垫	1					
10	90480–25M18	GROMMET 橡胶垫	2					
11	682–82370–00	PLUG CAP ASSY 火花塞帽组合	2					
	6E3–82370–21	PLUG CAP ASSY 火花塞帽组合	2					FOR CAR CAR车用
12	6K3–83557–00	TUBE 管	1					

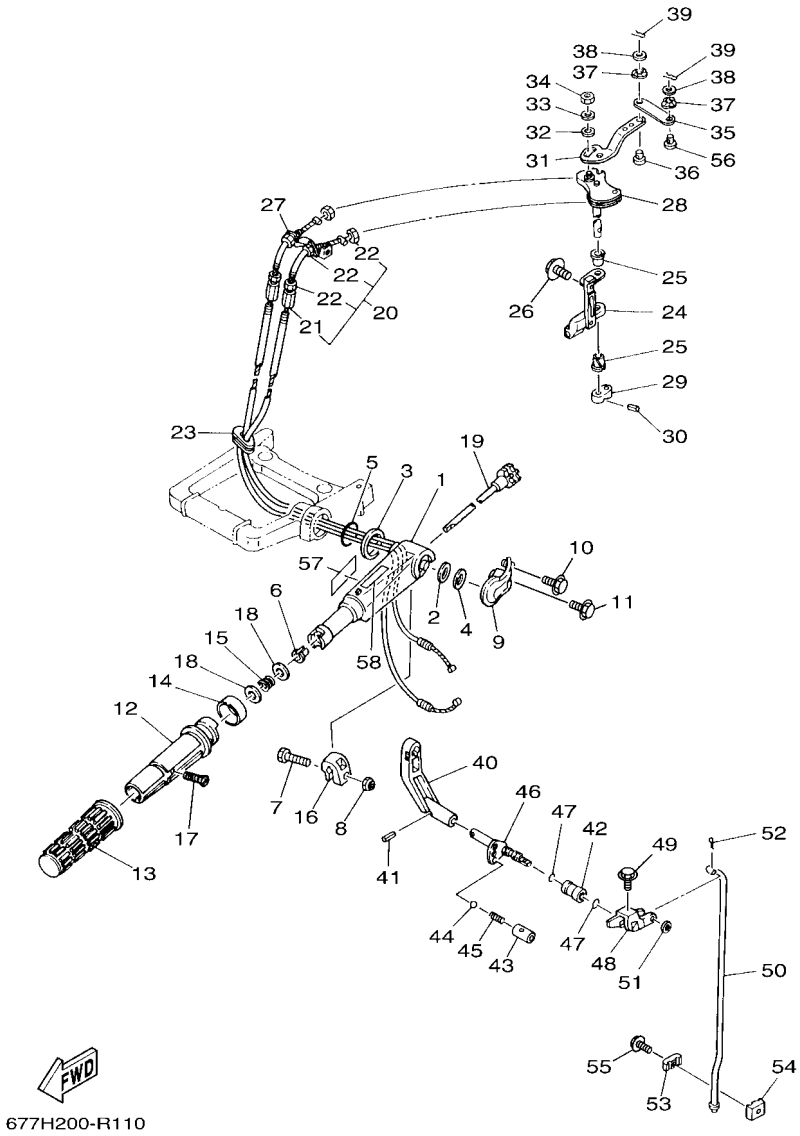

677H200-R110

FIG. 11 CONTROL 控制系统

REF. NO.	PART NO. 零件号码	DESCRIPTION 零件名称	677H					REMARKS 备注
1	647–42111–02–8D	HANDLE, STEERING 方向手	1					
2	90560–12075	SPACER 衬套	1					
3	90560–30085	SPACER 衬套	1					
4	677–42155–50	SPACER, HANDLE 1 手把衬套	1					UR UR
	677–42155–60	SPACER, HANDLE 1 手把衬套	1					UR UR
	677–42155–80	SPACER, HANDLE 1 手把衬套	1					UR UR
5	93210–25032	O-RING 0型环	1					
6	90386–08032	BUSH 衬套	1					
7	97095–06020	BOLT 螺栓	1					
8	90185–06062	NUT, SELF-LOCKING 自锁螺母	1					
9	677–42112–00–4D	HANDLE, STEERING 方向手	1					
10	97595–06520	BOLT, WITH WASHER 带垫圈螺栓	1					
11	97595–06540	BOLT, WITH WASHER 带垫圈螺栓	1					
12	647–42119–02	GRIP, STEERING HANDLE 方向手把握	1					
13	647–42177–00	RUBBER, HANDLE 手把橡皮	1					
14	677–42137–10	INDICATOR, THROTTLE 油门指示器	1					
15	90501–23215	SPRING, COMPRESSION 压簧	1					
16	656–42126–01	FRICTION, STEERING HANDLE GRIP 方向手把握把摩擦	1					
17	90152–05011	SCREW, COUNTERSUNK 沉头螺钉	1					
18	90201–10M02	WASHER, PLATE 平垫圈	2					
19	655–42138–01	LEVER, THROTTLE 油门杆	1					
20	677–26301–02	THROTTLE CABLE ASSY 油门钢索组合	2					
21	90179–06045	.NUT . 螺母	1					
22	90170–06011	.NUT . 螺母	3					
23	90480–16M03	GROMMET 橡胶垫	1					
24	677–41661–00–94	BRACKET 1 托架	1					
25	90386–08032	BUSH 衬套	2					

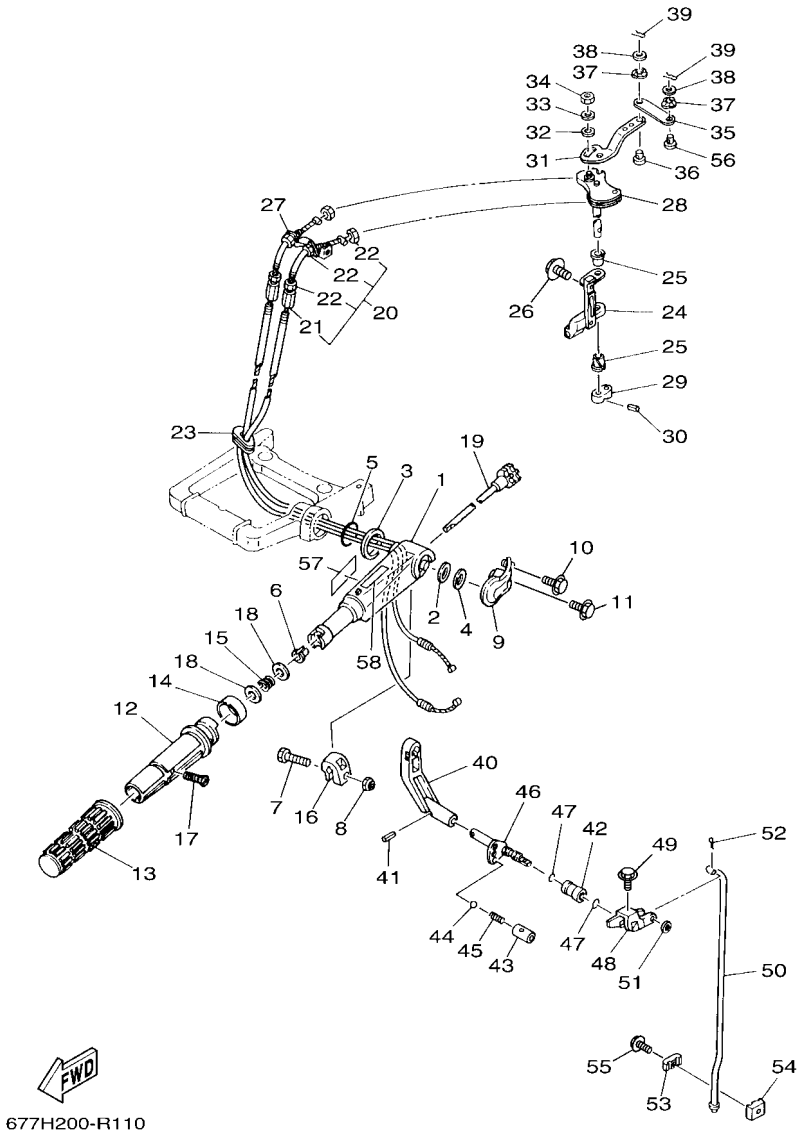

677H200-R110

FIG. 11 CONTROL 控制系统

REF. NO.	PART NO. 零件号码	DESCRIPTION 零件名称	H779					REMARKS 备注
26	97595–06535	BOLT, WITH WASHER 带垫圈螺栓	2					
27	655–14497–01	STAY, THROTTLE WIRE 油门钢索支承	1					
28	655–41638–01	PULLEY 滑	1					
29	655–48541–00–8D	STAY 支承	1					
30	90254–03003	PIN, SPRING 弹簧销	1					
31	677–41631–00	LEVER, MAGNETO CONTROL 磁电机控制杠杆	1					
32	92990–06600	WASHER, PLATE 面板垫圈	1					
33	92990–06100	WASHER, SPRING 弹簧垫圈	1					
34	95380–06600	NUT, HEXAGON 螺母	1					
35	677–41632–00	LEVER, MAGNETO CONTROL 磁电机控制杠杆	1					
36	647–41652–00	SET PIN 定位销，固定销	1					
37	90206–05005	WASHER, WAVE 波形垫圈	2					
38	92990–05200	WASHER, PLAIN 平垫圈	2					
39	90468–10005	CLIP 卡环	2					
40	655–44111–02–8D	HANDLE, GEAR SHIFT 变挡手柄	1					
41	91690–40016	PIN, SPRING 弹簧销	1					
42	655–44122–03	BUSHING, SHIFT ROD LEVER 变挡杆杠杆衬套	1					
43	655–42715–00	BUSHING 衬套	1					
44	93505–16024	BALL 滚珠	1					
45	90501–12274	SPRING, COMPRESSION 压簧	1					
46	677–44119–00	SHAFT, CHANGE 变挡轴	1					
47	93210–09165	O-RING 0型环	2					
48	655–44121–01	LEVER, SHIFT ROD 变挡杆杠杆	1					
49	97590–05520	BOLT, WITH WASHER 带垫螺栓	1					
50	655–44143–01	ROD, SHIFT 1 变挡连杆	1					
51	92990–06200	WASHER, PLAIN 平垫圈	1					
52	91490–16010	PIN. COTTER 开口销	1					

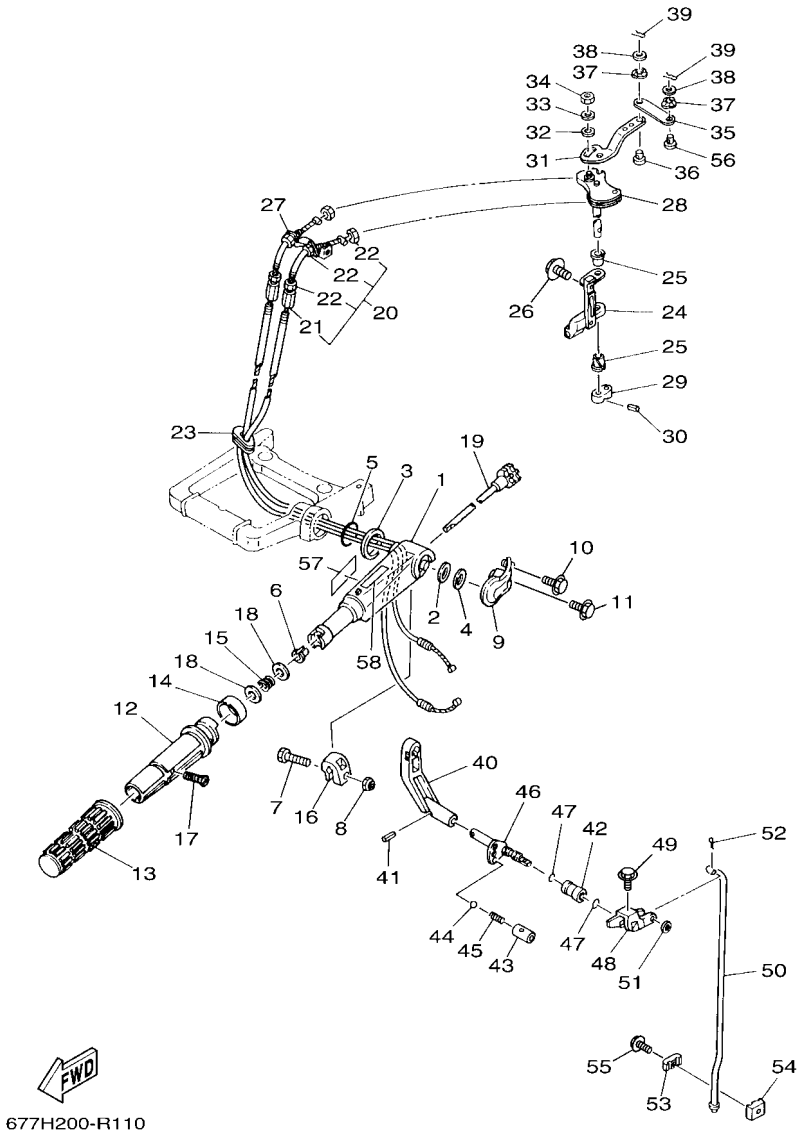

677H200-R110

FIG. 11 CONTROL 控制系统

REF. NO.	PART NO. 零件号码	DESCRIPTION 零件名称	H779					REMARKS 备注
53	616–44145–01	CONNECTOR, SHIFT ROD 1 变挡连杆接头	1					
54	616–44146–01	CONNECTOR, SHIFT ROD 2 变挡连杆接头	1					
55	97595–06520	BOLT, WITH WASHER 带垫圈螺栓	1					
56	90240–05004	PIN, CLEVIS 销	1					
57	6EE–81994–40	LABEL, SAFETY 警告标志	1					
58	6EE–81995–40	LABEL, WARNING 警告标志	1					

FIG. 12 REMO CON ATTACHMENT 遥控装置附件

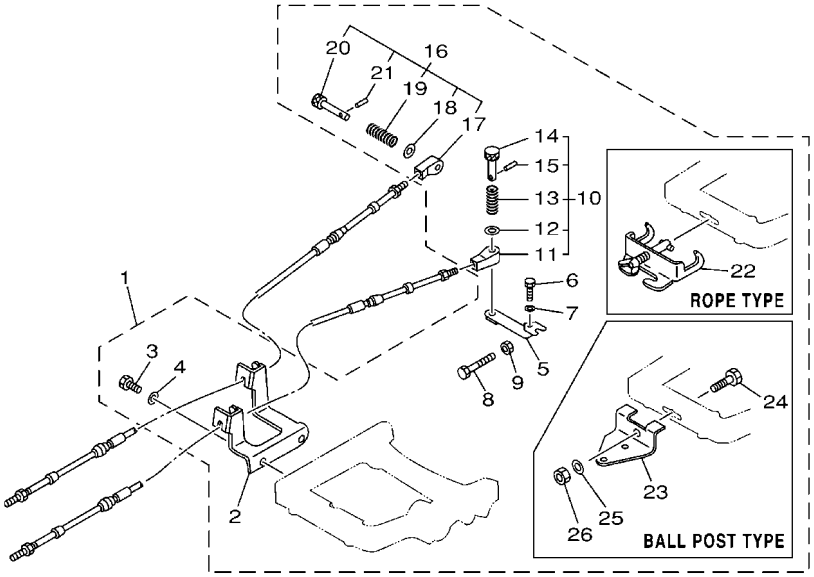

6770200-9110

REF. NO.	PART NO. 零件号码	DESCRIPTION 零件名称	H779					REMARKS 备注
1	655–48501–02	REMOTE CONT. ATTACHMENT ASSY. 遥控附件组合	1					AP ROPE TYPE AP ROPE TYPE
	655–48501–10	REMOTE CONT. ATTACHMENT ASSY. 遥控附件组合	1					AP BALL POST TYPE AP BALL POST TYPE
2	655–48531–51	.BRACKET, REMOTE CONTROL 1 . 遥控装置托架1	1					
3	97095–06018	.BOLT . 螺栓	2					
4	92995–06600	.WASHER . 垫圈	2					
5	647–48534–50	.THROTTLE LEVER, CONTROL . 油门控制杆	1					
6	97095–05020	.BOLT . 螺栓	1					
7	92995–05600	.WASHER . 垫圈	1					
8	97090–06045	.BOLT . 螺栓	1					
9	95380–06600	.NUT, HEXAGON . 螺母	1					
10	647–48330–50	.CABLE END ASSY . 钢索端部总成	1					
11	617–48346–90	..CABLE END, REMOTE CONTROL . . 遥控钢索端部	1					
12	92990–08600	..WASHER, PLATE . . 面板垫圈	1					
13	90501–10071	..SPRING, COMPRESSION . . 压簧	1					
14	617–48331–91	..HOOK, CABLE . . 钢索	1					
15	91690–30012	..PIN, SPRING . . 弹簧销	1					
16	647–48340–50	.CABLE END ASSY . 钢索端部组合	1					
17	647–48346–50	..CABLE END, REMOTE CONTROL . . 遥控钢索端部	1					
18	92990–08600	..WASHER, PLATE . . 面板垫圈	1					
19	90501–10264	..SPRING, COMPRESSION . . 压簧	1					
20	617–48361–91	..HOOK, CABLE . . 钢索	1					
21	91690–30012	..PIN, SPRING . . 弹簧销	1					
22	700–48510–12	.STEERING HOOK ASSY . 操舵连接板组合	1					ROPE TYPE ROPE TYPE
23	676–48511–10	.HOOK, STEERING . 操舵连接板	1					BALL POST TYPE BALL POST TYPE
24	97075–10040	.BOLT . 螺栓	1					
25	92990–10600	.WASHER, PLATE . 面板垫圈	1					
26	90185–10027	.NUT, SELF-LOCKING . 自锁螺母	1					

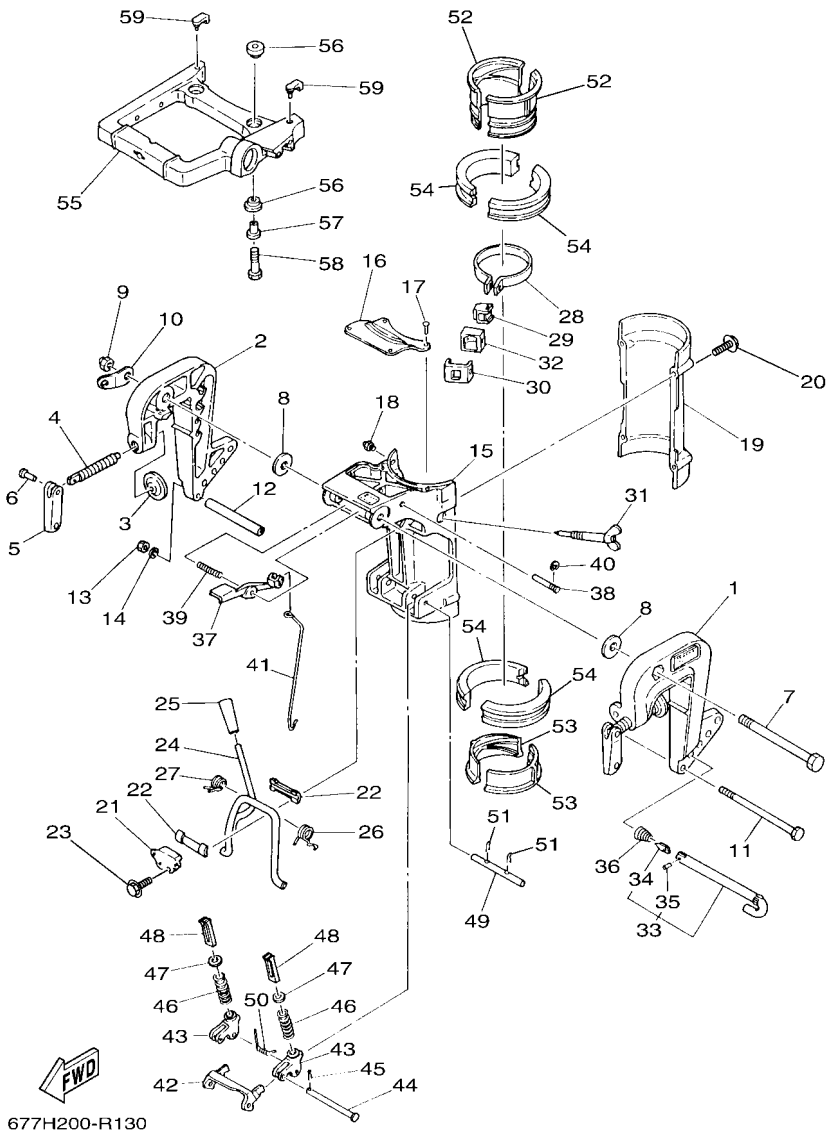

FIG. 13 BRACKET 托架

REF. NO.	PART NO. 零件号码	DESCRIPTION 零件名称	677H					REMARKS 备注
1	620–43111–02–8D	BRACKET, CLAMP 1 夹紧托架	1					
2	620–43112–01–8D	BRACKET, CLAMP 2 夹紧托架	1					
3	620–43114–00	PAD, TRANSOM CLAMP 艉板夹紧衬垫	2					
4	677–43116–01	SCREW, TRANSOM CLAMP 艉板夹紧螺钉	2					
5	663–43118–01–8D	HANDLE, TRANSOM CLAMP 艉板夹紧手柄	2					
6	90243–04007	PIN 销	2					
7	90101–10M00	BOLT 螺栓	1					
8	90201–10M66	WASHER, PLATE 平垫圈	2					
9	90185–10027	NUT, SELF-LOCKING 自锁螺母	1					
10	6E7–43113–01	PLATE, CLAMP BRACKET 夹紧托架面板	1					
11	90101–06336	BOLT 螺栓	1					
12	90387–06M11	COLLAR 轴套	1					
13	95380–06600	NUT, HEXAGON 螺母	1					
14	92990–06600	WASHER, PLATE 面板垫圈	1					
15	677–43311–01–8D	BRACKET, SWIVEL 1 旋转支架	1					
16	655–43318–00–4D	COVER 盖	1					
17	90269–02M08	RIVET 铆钉	4					
18	93700–06M03	NIPPLE, GREASE 润滑油喷嘴	1					
19	647–43312–00–8D	BRACKET, SWIVEL 2 旋转支架	1					
20	97595–06540	BOLT, WITH WASHER 带垫圈螺栓	4					
21	654–43313–00–94	BRACKET, SWIVEL 3 旋转支架	1					
22	620–43189–00	BUSHING 衬套	2					
23	97595–06525	BOLT, WITH WASHER 带垫圈螺栓	2					
24	647–43181–00	LEVER, TILT STOP 1 顶位销杆	1					
25	620–43632–00	KNOB, TILT 角度定位旋钮	1					
26	90508–16021	SPRING, TORSION 扭簧	1					
27	90508–16020	SPRING, TORSION 扭簧	1					

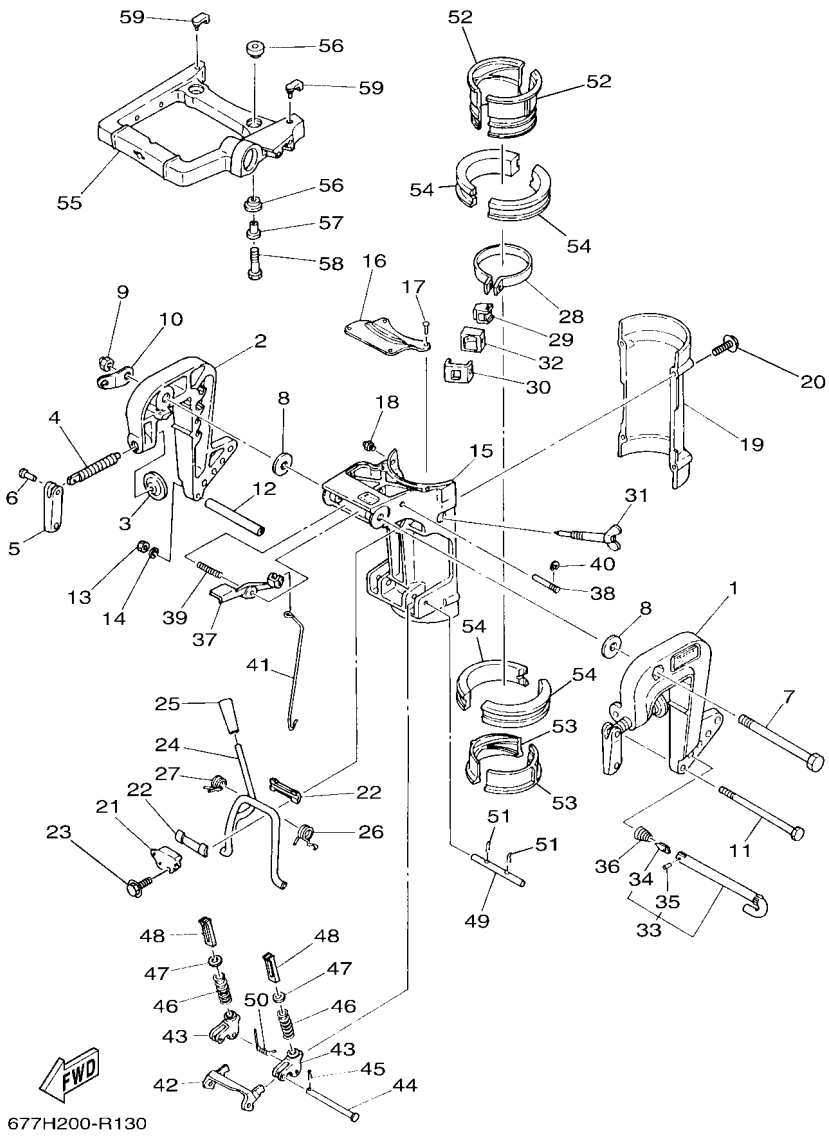

FIG. 13 BRACKET 托架

REF. NO.	PART NO. 零件号码	DESCRIPTION 零件名称	H779					REMARKS 备注
28	655–42525–00	PLATE, FRICTION 阻力板	1					
29	655–42526–00	PLATE, FRICTION 阻力板	1					
30	655–42527–00	PLATE, FRICTION 阻力板	1					
31	655–42529–00	SCREW, FRICTION PIECE 阻力块螺钉	1					
32	655–42532–00	COVER 盖	1					
33	6L4–43160–00	TILT ROD ASSY 角度定位杆组合	1					
34	689–43165–00	.PLATE, TILT LOCK . 角度定位锁紧面板	1					
35	91690–30008	.PIN, SPRING . 弹簧销	1					
36	90502–10M07	SPRING, CONICAL 锥形弹簧	1					
37	677–43630–00	TILT LEVER ASSY 角度定位杆组合	1					
38	90249–04M05	PIN 销	1					
39	90501–16104	SPRING, COMPRESSION 压簧	1					
40	99001–04600	CIRCLIP 卡环	1					
41	677–43616–00	ROD, TILT LOCK 角度定位锁紧杆	1					
42	647–43614–00	PLATE, TILT LOCK 角度定位锁紧面板	1					
43	647–43615–01	PLATE, TILT LOCK 角度定位锁紧面板	2					
44	90240–05047	PIN, CLEVIS 销	1					
45	90468–10005	CLIP 卡环	1					
46	90501–26147	SPRING, COMPRESSION 压簧	2					
47	647–43627–01	STOPPER 限位板	2					
48	647–43613–00	ARM, TILT LOCK 角度定位锁紧臂	2					
49	647–43659–00	SHAFT, REVERSE LOCK 倒挡锁紧轴	1					
50	90508–18022	SPRING, TORSION 扭簧	1					
51	90468–10003	CLIP 卡环	2					
52	647–42537–00	BUSHING, PIVOT SHAFT 枢轴衬套	2					
53	677–42538–00	BUSHING, PIVOT SHAFT 枢轴衬套	2					
54	647–42539–00	BUSHING, PIVOT SHAFT 枢轴衬套	4					

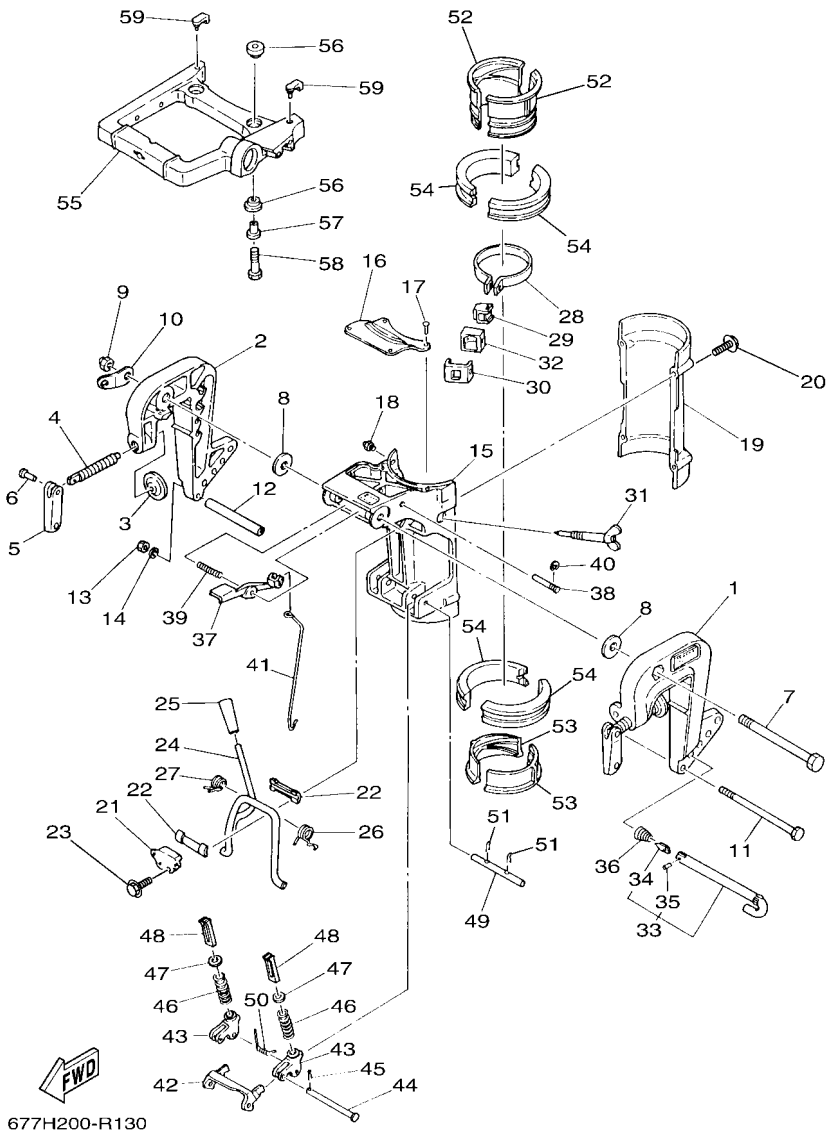

FIG. 13 BRACKET 托架

REF. NO.	PART NO. 零件号码	DESCRIPTION 零件名称	677H					REMARKS 备注
55	655–42511–00–8D	BRACKET, STEERING 方向托架	1					
56	647–42541–00	DAMPER 减震器	4					
57	655–42542–00	PIPE 管	2					
58	97075–08035	BOLT 螺栓	2					
59	647–42523–00	SPACER, FRICTION 阻力器衬套	2					

FIG. 14 UPPER CASING 水上装置壳体

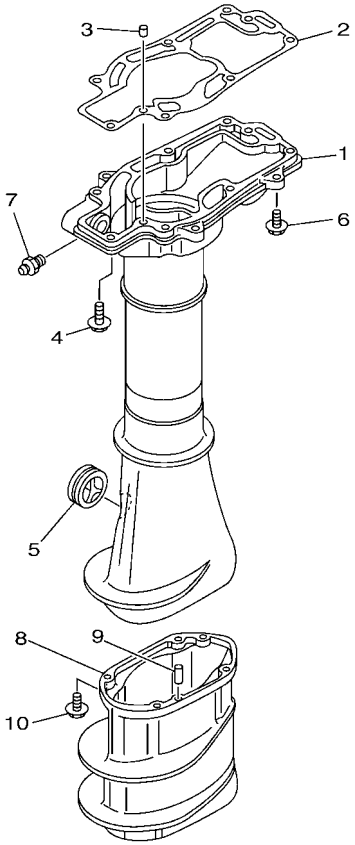

677H200-R140

REF. NO.	PART NO. 零件号码	DESCRIPTION 零件名称	H779					REMARKS 备注
1	677–45111–01–8D	CASING, UPPER 水上装置壳	1					
2	677–45113–A1	GASKET, UPPER CASING 水上装置壳体衬垫	1					
3	93605–08041	PIN, DOWEL 定位销	2					
4	97595–06525	BOLT, WITH WASHER 带垫圈螺栓	7					
5	647–45151–01	COVER, UPPER CASING 水上装置壳体盖	1					
6	97595–06520	BOLT, WITH WASHER 带垫圈螺栓	4					
7	93700–06M03	NIPPLE, GREASE 润滑油喷嘴	1					
8	647–45211–10–8D	EXTENSION 延伸部分	1					L(22.9") L (22. 9")
9	93604–08062	PIN, DOWEL 定位销	2					L(22.9") L (22. 9")
10	97595–06520	BOLT, WITH WASHER 带垫圈螺栓	4					L(22.9") L (22. 9")

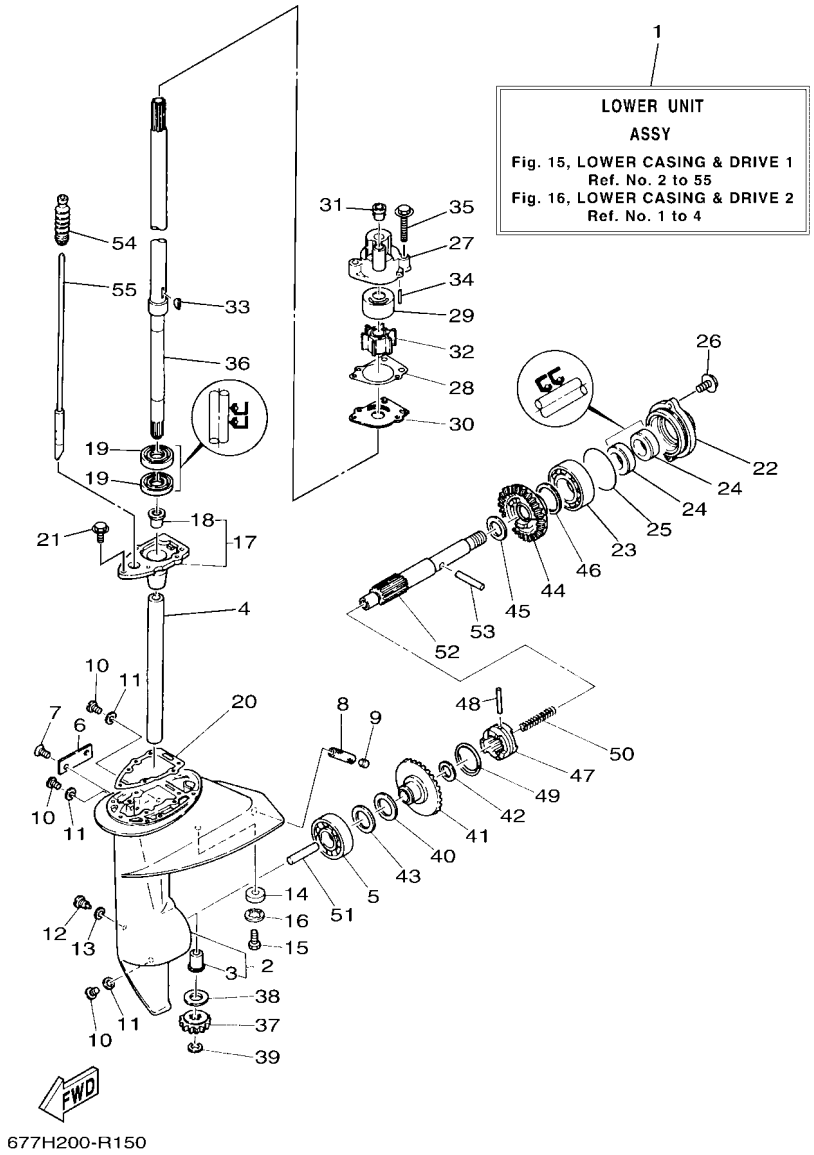

FIG. 15 LOWER CASING & DRIVE 1 水下装置壳体 & 驱动系统 1

REF. NO.	PART NO. 零件号码	DESCRIPTION 零件名称	677H					REMARKS 备注
1	677–45300–01–8D	LOWER UNIT ASSY 水下装置总成	1					S(17.4") S(17.4")
	677–45300–11–8D	LOWER UNIT ASSY 水下装置总成	1					L(22.9") L(22.9")
2	655–45311–02–8D	CASING, LOWER 水下装置壳	1					
3	647–45316–09	.BUSHING, DRIVE SHAFT .驱动轴衬套	1					
4	90387–14108	COLLAR 轴套	1					
5	93306–004U0	BEARING 轴承	1					
6	655–45214–02–4D	COVER, WATER INLET 1 进水口盖	1					
7	90152–05M02	SCREW, COUNTERSUNK 沉头螺钉	2					
8	626–45215–00	COVER, WATER INLET 2 进水口盖	1					
9	90334–10008	PLUG, STRAIGHT 圆柱	1					
10	90340–08002	PLUG, STRAIGHT SCREW 螺塞	3					
11	90430–08003	GASKET 衬垫	3					
12	90149–06003	SCREW 螺钉	1					
13	90430–06M03	GASKET 衬垫	1					
14	677–45251–00	ANODE 阳极	1					
15	95895–06014	BOLT, FLANGE 凸缘螺栓	1					
16	92990–06300	WASHER, INTERNAL TOOTH 内齿垫	1					
17	647–45331–00–94	HOUSING, BEARING 轴承壳	1					
18	647–45316–09	.BUSHING, DRIVE SHAFT .驱动轴衬套	1					
19	93101–18050	OIL SEAL 油封	2					
20	677–45315–A1	PACKING, LOWER CASING 水下装置壳体密封垫	1					
21	97595–06520	BOLT, WITH WASHER 带垫圈螺栓	2					
22	655–45361–02–8D	CAP, LOWER CASING 水下装置壳体盖	1					
23	93306–00501	BEARING 轴承	1					
24	93101–15074	OIL SEAL 油封	2					
25	93210–58144	O-RING 0型环	1					
26	97595–06520	BOLT, WITH WASHER 带垫圈螺栓	2					

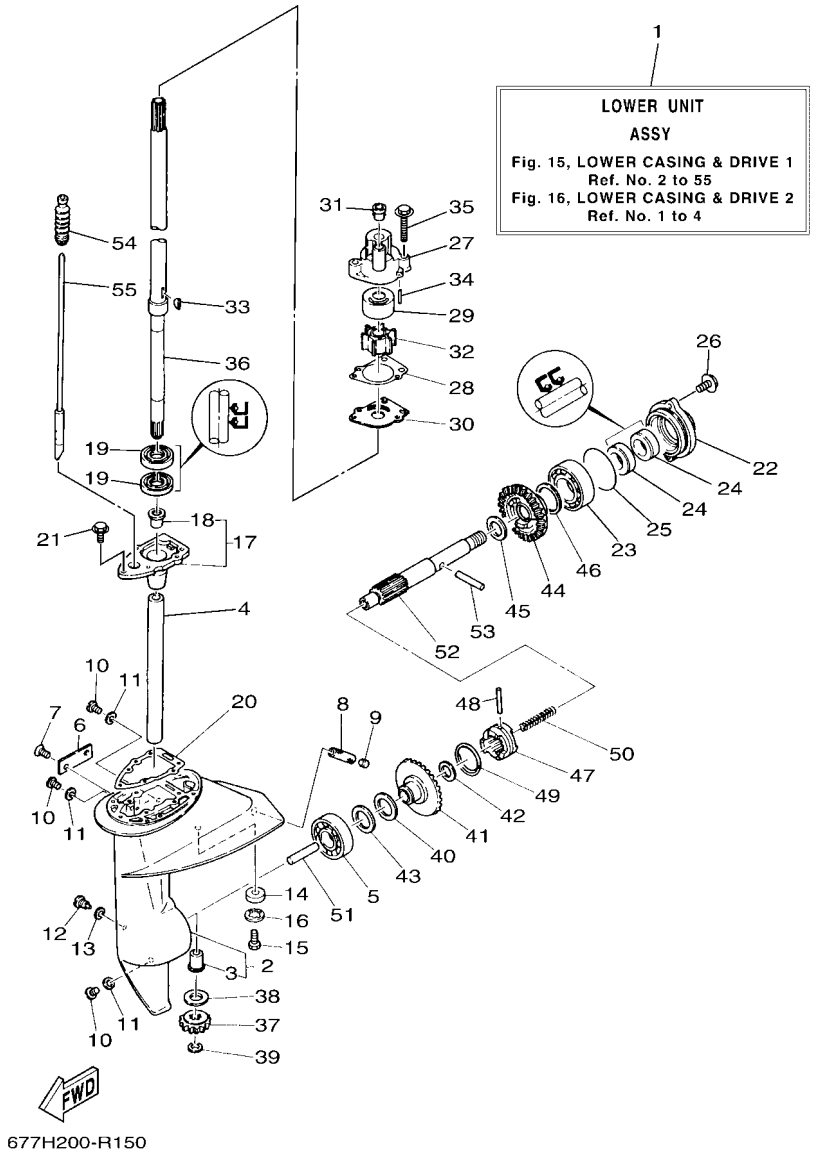

677H200-R150

FIG. 15 LOWER CASING & DRIVE 1 水下装置壳体 & 驱动系统 1

REF. NO.	PART NO. 零件号码	DESCRIPTION 零件名称	H779					REMARKS 备注
27	655–44311–03	HOUSING, WATER PUMP 水泵壳	1					
28	655–44315–A1	GASKET, WATER PUMP 水泵衬垫	1					
29	655–44322–41	INSERT, CARTRIDGE 芯子	1					FOR CHROMATE CHROMATE车用
30	655–44323–41	OUTER PLATE, CARTRIDGE 外挡板	1					FOR CHROMATE CHROMATE车用
31	647–44366–00	DAMPER, WATER SEAL 2 水封减震器	1					
32	662–44352–01	IMPELLER 叶	1					
33	90280–03024	KEY, WOODRUFF 半圆键	1					
34	93604–18080	PIN, DOWEL 定位销	2					
35	97595–06540	BOLT, WITH WASHER 带垫圈螺栓	3					
36	655–45501–00	DRIVE SHAFT COMP. 驱动轴组	1					S(17.4") S(17.4")
	655–45501–10	DRIVE SHAFT COMP. 驱动轴组	1					L(22.9") L(22.9")
37	647–45551–00	PINION (13T) 小齿	1					
38	647–45533–00	SHIM (T:0.8MM) 填隙	1					UR UR
	647–45533–20	SHIM (T:1.0MM) 填隙	1					UR UR
	647–45533–30	SHIM (T:1.1MM) 填隙	1					UR UR
	647–45533–40	SHIM (T:1.2MM) 填隙	1					UR UR
	647–45533–50	SHIM (T:1.3MM) 填隙	1					UR UR
	647–45533–60	SHIM (T:1.4MM) 填隙	1					UR UR
39	99001–07600	CIRCLIP 卡环	1					
40	90201–12161	WASHER, PLATE 平垫圈	1					
41	647–45560–00	GEAR 1 (27T) 齿	1					
42	90201–13198	WASHER, PLATE 平垫圈	1					
43	647–45567–00	SHIM (T:0.10MM) 填隙	1					UN UN
44	647–45570–01	GEAR 2 (27T) 齿	1					
45	90201–15229	WASHER, PLATE 平垫圈	1					
46	626–45577–00	SHIM (T:0.10MM) 填隙	1					UR UR
	626–45577–10	SHIM (T:0.20MM) 填隙	1					UR UR

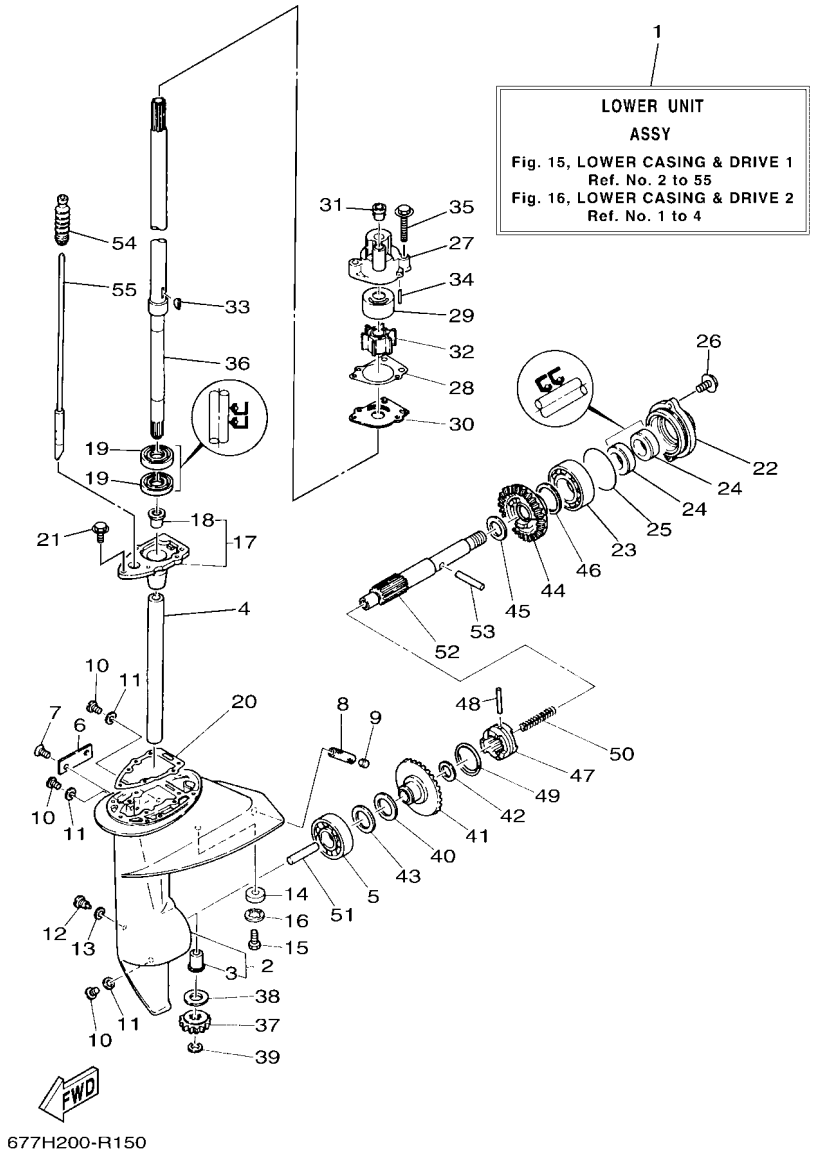

FIG. 15 LOWER CASING & DRIVE 1 水下装置壳体 & 驱动系统 1

REF. NO.	PART NO. 零件号码	DESCRIPTION 零件名称	677H					REMARKS 备注
46	626–45577–20	SHIM (T:0.30MM) 填隙	1					UR UR
	626–45577–30	SHIM (T:0.40MM) 填隙	1					UR UR
	626–45577–40	SHIM (T:0.50MM) 填隙	1					UR UR
47	655–45631–00	CLUTCH, DOG 爪形离合器	1					
48	93605–29098	PIN, DOWEL 定位销	1					
49	93440–30040	CIRCLIP 卡环	1					
50	90501–12M61	SPRING, COMPRESSION 压簧	1					
51	654–45635–00	PLUNGER, SHIFT 变挡柱	1					
52	677–45611–01	SHAFT, PROPELLER 螺旋桨轴	1					
53	90250–05036	PIN, STRAIGHT 直销，圆柱销	1					
54	655–44147–00	BOOT, SHIFT ROD 变挡连杆衬套	1					
55	655–44150–00	SHIFT CAM ASSY 变挡凸轮组合	1					S(17.4") S(17.4")
	655–44150–10	SHIFT CAM ASSY 变挡凸轮组合	1					L(22.9") L(22.9")

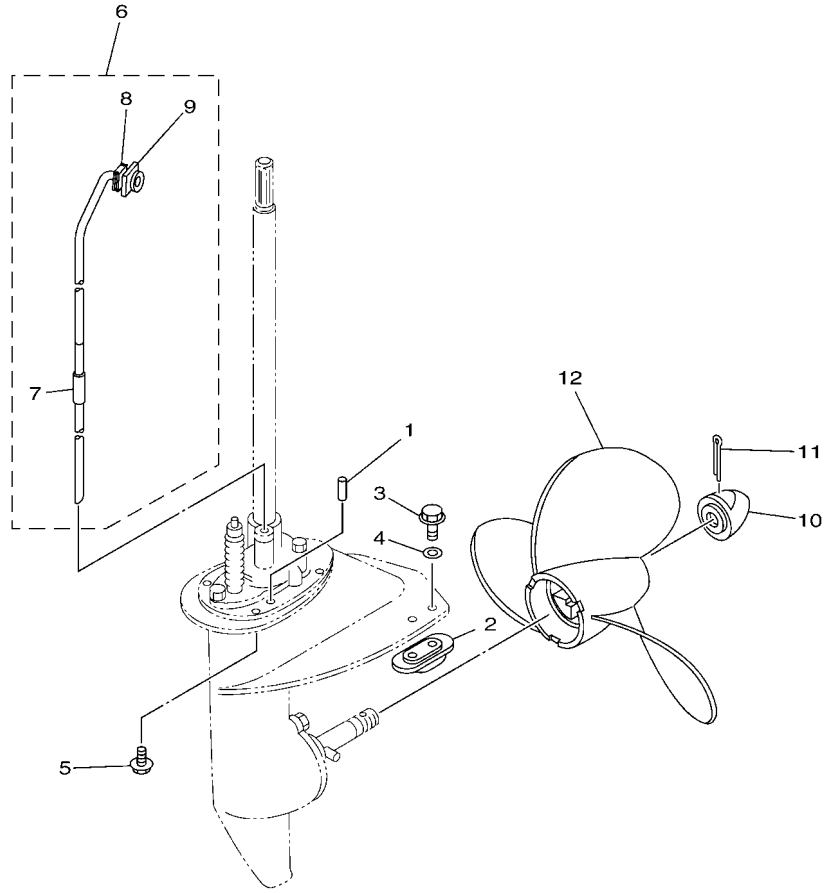

677H200-R160

FIG. 16 LOWER CASING & DRIVE 2 水下装置壳体 & 驱动系统 2

REF. NO.	PART NO. 零件号码	DESCRIPTION 零件名称	677H					REMARKS 备注
1	93604–08062	PIN, DOWEL 定位销	2					
2	6E0–45251–12	ANODE 阳极	1					
3	95895–06016	BOLT, FLANGE 凸缘螺栓	2					
4	92990–06300	WASHER, INTERNAL TOOTH 内齿垫	2					
5	97595–06520	BOLT, WITH WASHER 带垫圈螺栓	4					
6	655–44360–00	WATER TUBE ASSY 水管组合	1					S(17.4") S(17.4")
	655–44360–10	WATER TUBE ASSY 水管组合	1					L(22.9") L(22.9")
7	90445–11262	.HOSE (L30) .软管	1					
8	655–44365–00	.DAMPER, WATER SEAL 1 .水封减震器	1					
9	655–44373–00	.SET PLATE, WATER TUBE .水管固定面板	1					
10	647–45616–02	NUT, PROPELLER 螺旋桨螺母	1					
11	91490–30030	PIN. COTTER 开口销	1					
12	655–45947–01	PROPELLER (3X9"X5-3/4"-C) 螺旋桨组合	1					UR UR
	655–45949–00	PROPELLER (3X9"X5"-C) 螺旋桨组合	1					UR UR
	655–45945–00	PROPELLER (3X9"X6-1/4"-C) 螺旋桨组合	1					UR UR
	647–45943–00	PROPELLER (3X9"X7"-C) 螺旋桨组合	1					UR UR
	655–45943–00	PROPELLER (3X9"X7-1/2"-C) 螺旋桨组合	1					UR UR
	647–45941–00	PROPELLER (3X9-1/4"X9-1/4"-C) 螺旋桨组合	1					UR UR
	647–45947–00	PROPELLER (3X9"X9"-C) 螺旋桨组合	1					UR UR

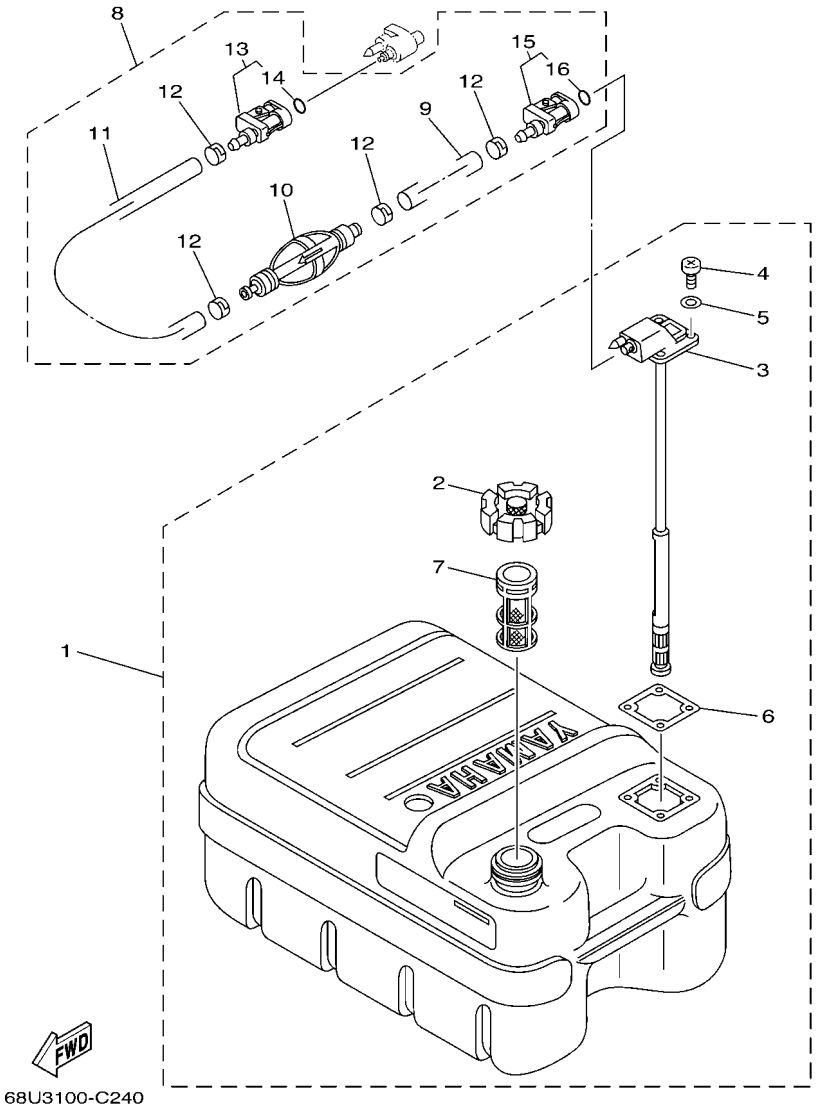

FIG. 17 FUEL TANK 油箱

REF. NO.	PART NO. 零件号码	DESCRIPTION 零件名称	H779					REMARKS 备注
1	6YJ–24201–20	FUEL TANK ASSY (24L) 燃油箱组合	1					AP AP
2	6YJ–24610–01	.CAP ASSY . 油箱盖总成	1					
3	6YJ–24260–10	.FUEL METER ASSY . 油量计组合	1					
4	90157–05M19	.SCREW, PAN HEAD . 大柱头螺钉	4					
5	6Y1–24329–00	.SEAL . 密封	4					
6	6Y1–24268–00	.GASKET, FUEL METER . 油量计衬垫	1					
7	6YJ–24167–00	.STRAINER . 滤	1					
8	61J–24306–04	FUEL PIPE COMP. 1 燃油管组件1	1					AP AP
9	90445–11M06	.HOSE (L2050) . 软管	1					
10	61J–24360–00	.PRIMER PUMP ASSY . 起动注油泵组合	1					
11	90445–11M05	.HOSE (L850) . 软管	1					
12	650–24351–51	.BAND 1 . 带1	4					
13	6G1–24305–05	.FUEL PIPE JOINT COMP. 2 . 燃油管接头组件2	1					
14	93210–08287	..O-RING . . 0型环	1					
15	6Y1–24305–06	.FUEL PIPE JOINT COMP. 2 . 燃油管接头组件2	1					
16	93210–08287	..O-RING . . 0型环	1					

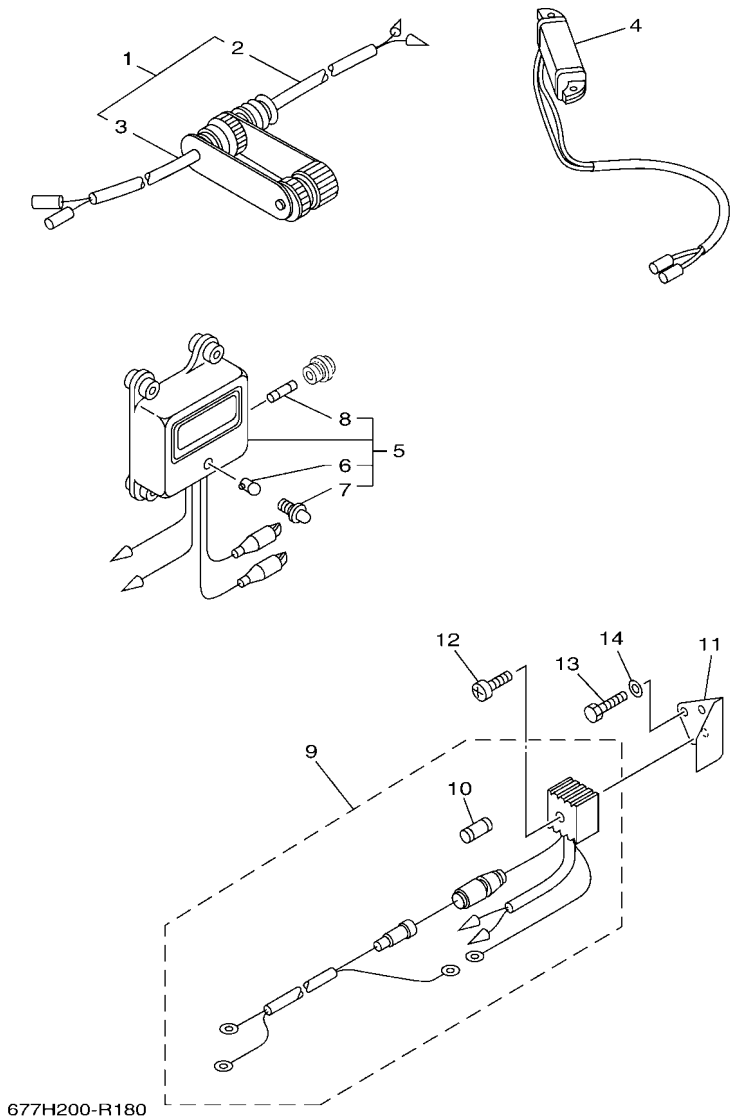

FIG. 18 OPTIONAL PARTS 选购件

REF. NO.	PART NO. 零件号码	DESCRIPTION 零件名称	H779					REMARKS 备注
1	682–84380–00	CONCENT 2P 集线器2P	1					
2	682–84381–00	.2P CONCENT . 集线器2P	1					
3	682–84382–00	.2P CONCEMT . 集线器2P	1					
4	6E7–85533–40	COIL, LIGHTING 照明线	1					
5	648–81970–41	RECTIFIER ASSY 整流器组合	1					
6	648–81977–40	.BULB, PILOT LIGHT . 指示灯泡	1					
7	648–81978–40	.LENS, PILOT LIGHT . 指示灯镜头	1					
8	648–82151–41	.FUSE . 保险丝	1					
9	676–81970–01	RECTIFIER ASSY 整流器组合	1					
10	663–82151–00	.FUSE (12V-20A) . 保险丝	1					
11	*	PLATE, RECTIFIER FITTING 整流器装配面板	1					LM LM
12	97880–05025	SCREW, PAN HEAD 大柱头螺钉	1					
13	97013–06010	BOLT 螺栓	2					
14	92903–06600	WASHER, PLATE 面板垫圈	2					

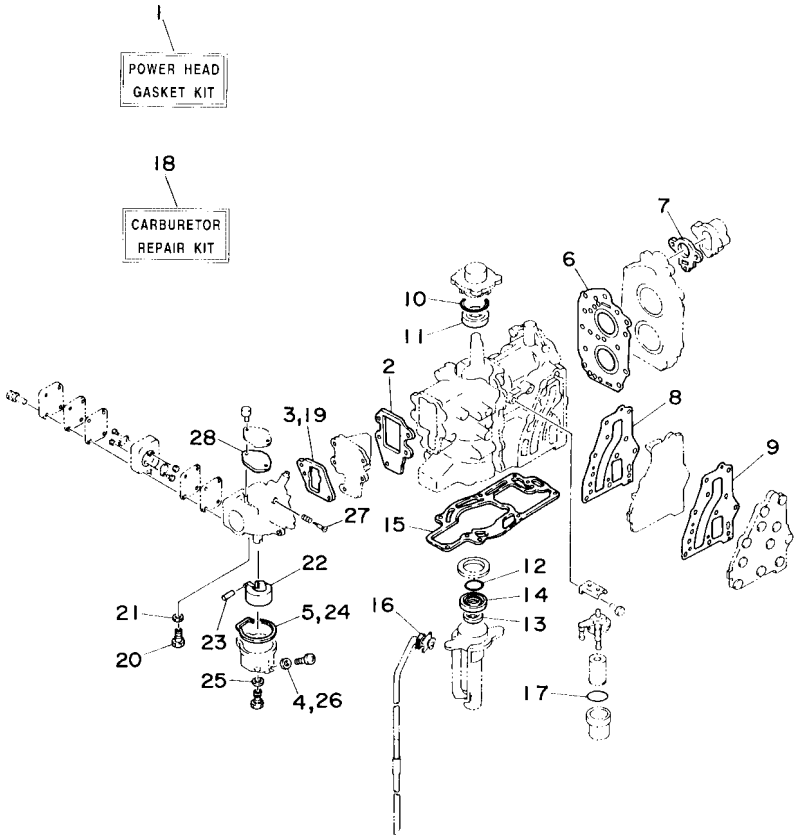

6773200-C180

FIG. 19 REPAIR KIT 1 修理套件 1

REF. NO.	PART NO. 零件号码	DESCRIPTION 零件名称	H779					REMARKS 备注
1	677–W0001–A3	POWER HEAD GASKET KIT 衬垫套	1					
2	677–13621–A1	.GASKET, VALVE SEAT . 阀座衬垫	1					
3	677–14198–A1	.GASKET . 衬垫	1					
4	655–14398–00	.GASKET . 衬垫	1					
5	677–14384–01	.GASKET, FLOAT CHAMBER . 浮子室衬垫	1					
6	677–11181–A1	.GASKET, CYLINDER HEAD 1 . 气缸头垫片1	1					
7	677–12414–A1	.GASKET, COVER . 盖衬垫	1					
8	677–41112–A2	.GASKET, EXHAUST INNER COVER . 排气管内盖衬垫	1					
9	677–41114–A1	.GASKET, EXHAUST OUTER COVER . 排气管外盖衬垫	1					
10	93210–42159	.O-RING . 0型环	1					
11	93102–20M25	.OIL SEAL . 油封	1					
12	93210–42M70	.O-RING . 0型环	1					
13	93101–14M01	.OIL SEAL . 油封	1					
14	93101–20M29	.OIL SEAL . 油封	1					
15	677–45113–A1	.GASKET, UPPER CASING . 水上装置壳体衬垫	1					
16	655–44365–00	.DAMPER, WATER SEAL 1 . 水封减震器	1					
17	93210–32738	.O-RING . 0型环	1					
18	677–W0093–06	CARBURETOR REPAIR KIT 化油器修理套	1					
19	677–14198–A1	.GASKET . 衬垫	1					
20	6E8–14390–12	.NEEDLE VALVE ASSY . 针阀组合	1					
21	367–14195–00	.GASKET . 针阀垫	1					
22	6E7–14385–00	.FLOAT . 浮子	1					
23	647–14386–10	.PIN, FLOAT . 浮子销	1					
24	677–14384–01	.GASKET, FLOAT CHAMBER . 浮子室衬垫	1					
25	1J2–14398–00	.GASKET . 衬垫	1					
26	655–14398–00	.GASKET . 衬垫	1					
27	648–14323–00	.SCREW, AIR ADJUSTING . 空气调整螺钉	1					

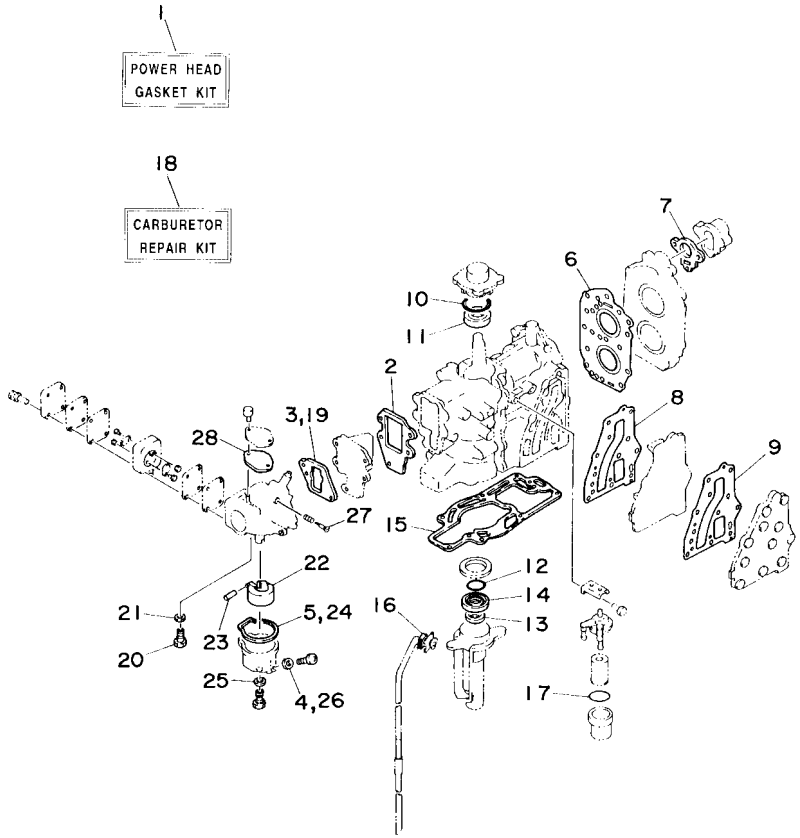

6773200-C180

FIG. 19 REPAIR KIT 1 修理套件 1

REF. NO.	PART NO. 零件号码	DESCRIPTION 零件名称	H779					REMARKS 备注
28	677–14227–01	.GASKET .垫	1					

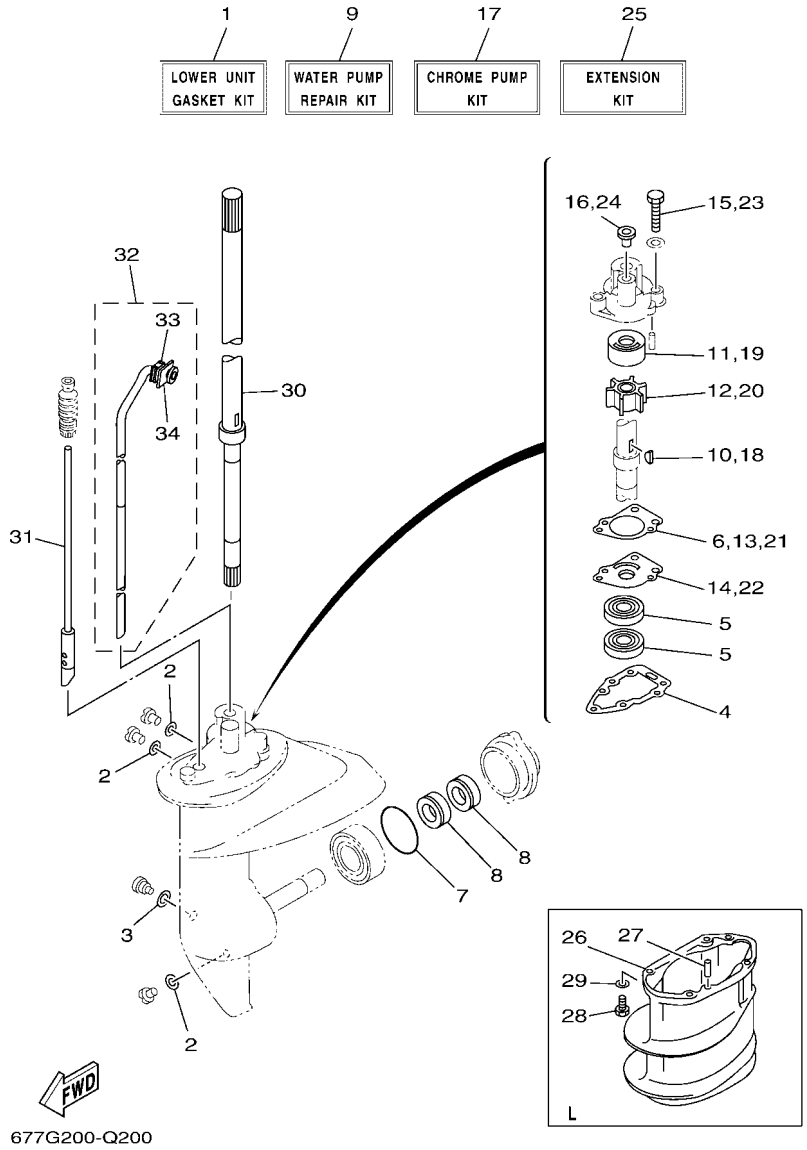

FIG. 20 REPAIR KIT 2 修理套件 2

REF. NO.	PART NO. 零件号码	DESCRIPTION 零件名称	677H					REMARKS 备注
1	677–W0001–C0	LOWER UNIT GASKET KIT 衬垫套	1					
2	90430–08003	.GASKET . 衬垫	3					
3	90430–06M03	.GASKET . 衬垫	1					
4	677–45315–A1	.PACKING, LOWER CASING . 水下装置壳体密封垫	1					
5	93101–18050	.OIL SEAL . 油封	2					
6	655–44315–A1	.GASKET, WATER PUMP . 水泵衬垫	1					
7	93210–58144	.O-RING . 0型环	1					
8	93101–15074	.OIL SEAL . 油封	2					
9	655–W0078–B0	WATER PUMP REPAIR KIT 水泵修理套	1					
10	90280–03024	.KEY, WOODRUFF . 半圆键	1					
11	650–44322–01	.INSERT, CARTRIDGE . 芯子	1					
12	662–44352–01	.IMPELLER . 叶	1					
13	655–44315–A1	.GASKET, WATER PUMP . 水泵衬垫	1					
14	655–44323–01	.OUTER PLATE, CARTRIDGE . 外挡板	1					
15	97095–06040	.BOLT . 螺栓	3					
16	647–44366–00	.DAMPER, WATER SEAL 2 . 水封减震器	1					
17	655–W0078–CA	CHROMATE POMP KIT 水泵修理套	1					
18	90280–03024	.KEY, WOODRUFF . 半圆键	1					
19	655–44322–41	.INSERT, CARTRIDGE . 芯子	1					
20	662–44352–01	.IMPELLER . 叶	1					
21	655–44315–A1	.GASKET, WATER PUMP . 水泵衬垫	1					
22	655–44323–41	.OUTER PLATE, CARTRIDGE . 外挡板	1					
23	97095–06040	.BOLT . 螺栓	3					
24	647–44366–00	.DAMPER, WATER SEAL 2 . 水封减震器	1					
25	677–W0072–00–8D	EXTENSION KIT 延伸套	1					L(22.9") L (22. 9")
26	647–45211–10–8D	.EXTENSION . 延伸部分	1					
27	93604–08062	.PIN, DOWEL . 定位销	2					

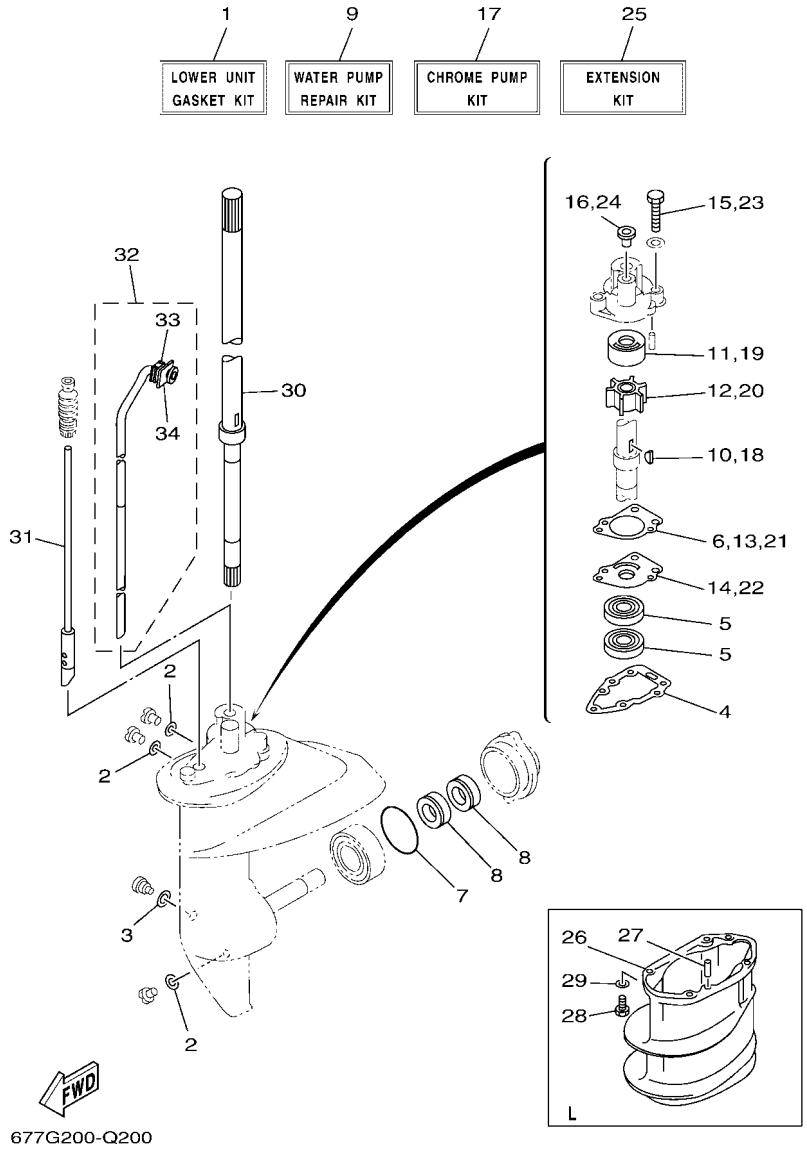

FIG. 20 REPAIR KIT 2 修理套件 2

REF. NO.	PART NO. 零件号码	DESCRIPTION 零件名称	H779					REMARKS 备注
28	97095–06020	.BOLT . 螺栓	4					
29	92995–06600	.WASHER . 垫圈	4					
30	655–45501–10	.DRIVE SHAFT COMP. . 驱动轴组	1					
31	655–44150–10	.SHIFT CAM ASSY . 变挡凸轮组合	1					
32	655–44360–10	.WATER TUBE ASSY . 水管组合	1					
33	655–44365–00	..DAMPER, WATER SEAL 1 . . 水封减震器	1					
34	655–44373–00	..SET PLATE, WATER TUBE . . 水管固定面板	1					

PART NO. 零件号码	REF. NO.
677–11111–00–1S	3 – 32
677–11181–A1	3 – 33
	19 – 6
664–11325–00	1 – 1
	3 – 18
646–11370–01	3 – 4
650–11370–01	3 – 3
676–11372–00	3 – 6
677–11372–00	3 – 5
677–11400–02	4 – 1
677–11412–02	4 – 2
677–11422–02	4 – 3
677–11432–02	4 – 4
677–11442–02	4 – 5
677–11515–01	4 – 11
647–11610–00	4 – 15
647–11610–10	4 – 15
647–11610–20	4 – 15
677–11631–00–97	4 – 14
6G1–11633–00	4 – 16
677–11635–00	4 – 14
677–11636–00	4 – 14
6E0–11651–01	4 – 6
6G1–11681–00	4 – 8
677–12413–00–1S	3 – 35
677–12414–A1	3 – 36
	19 – 7
677–13610–00	5 – 1
677–13621–A1	5 – 3
	19 – 2
677–14157–01	6 – 12
367–14195–00	6 – 6
367–14195–00	19 – 21
677–14198–A1	5 – 6
	19 – 3
	19 – 19
646–14212–01	6 – 10
677–14227–01	6 – 13
	19 – 28
677–14301–08	6 – 1
664–14321–01	6 – 8
648–14323–00	6 – 9
	19 – 27
6E7–14325–00	6 – 35
647–14326–00	6 – 11
677–14327–01	6 – 17
677–14341–00	6 – 3
647–14342–23	6 – 4

PART NO. 零件号码	REF. NO.
677–14343–40	6 – 2
6E7–14381–00	6 – 19
677–14384–01	6 – 22
	19 – 5
	19 – 24
6E7–14385–00	6 – 23
	19 – 22
647–14386–10	6 – 25
	19 – 23
6E8–14390–12	6 – 5
	19 – 20
367–14396–00	6 – 24
1J2–14398–00	6 – 7
	19 – 25
655–14398–00	6 – 21
	19 – 4
	19 – 26
677–14431–00	5 – 15
677–14441–00	5 – 16
624–14485–00	3 – 7
655–14497–01	11 – 27
677–15100–03	3 – 2
677–15359–00–94	3 – 20
677–15379–02	3 – 31
677–15396–01–CA	3 – 25
677–15705–02	8 – 13
677–15710–05	8 – 1
682–15711–71	8 – 2
677–15714–00–94	8 – 4
677–15717–01	8 – 10
6E7–15723–00–94	8 – 26
677–15741–01	8 – 11
677–15746–00	8 – 33
677–15747–00	8 – 36
656–15748–00	8 – 29
689–15755–01	8 – 14
677–15758–01–94	8 – 18
677–15761–01	2 – 3
677–15762–00	8 – 19
677–15770–01	8 – 31
6K3–15771–00–94	8 – 23
677–15772–00	8 – 32
648–15773–00	8 – 3
6F5–15779–02	8 – 16
6A0–15789–00	8 – 17
6YJ–24167–00	17 – 7
6YJ–24201–20	17 – 1
6YJ–24260–10	17 – 3

PART NO. 零件号码	REF. NO.
6Y1–24268–00	17 – 6
6G1–24304–10	7 – 1
6G1–24305–05	17 – 13
6Y1–24305–06	17 – 15
61J–24306–04	17 – 8
6Y1–24329–00	17 – 5
650–24351–51	17 – 12
61J–24360–00	17 – 10
677–24411–02	6 – 28
677–24412–02	6 – 29
677–24413–01	6 – 32
6A0–24421–01	6 – 27
677–24434–02	6 – 26
677–24435–02	6 – 30
677–24444–01	6 – 33
677–24471–01	6 – 31
61N–24521–00	7 – 5
61N–24560–00	7 – 3
61N–24563–00	1 – 3
	7 – 4
6K3–24566–00	7 – 7
6YJ–24610–01	17 – 2
677–26301–02	11 – 20
677–41111–01–1S	3 – 38
677–41112–A2	3 – 39
	19 – 8
677–41113–01–1S	3 – 41
677–41114–A1	3 – 40
	19 – 9
677–41210–00	6 – 34
677–41213–00–94	9 – 23
677–41226–00	6 – 16
677–41241–00	6 – 15
677–41256–00	5 – 9
677–41271–01	5 – 10
677–41611–00–94	9 – 18
677–41612–00	9 – 19
677–41615–10	9 – 21
677–41631–00	11 – 31
677–41632–00	11 – 35
655–41638–01	11 – 28
647–41652–00	8 – 39
	11 – 36
677–41661–00–94	11 – 24
647–42111–02–8D	11 – 1
677–42112–00–4D	11 – 9
647–42119–02	11 – 12
656–42126–01	11 – 16

PART NO. 零件号码	REF. NO.
677–42137–10	11 – 14
655–42138–01	11 – 19
677–42155–50	11 – 4
677–42155–60	11 – 4
677–42155–80	11 – 4
647–42177–00	11 – 13
655–42511–00–8D	13 – 55
647–42523–00	13 – 59
655–42525–00	13 – 28
655–42526–00	13 – 29
655–42527–00	13 – 30
655–42529–00	13 – 31
655–42532–00	13 – 32
647–42537–00	13 – 52
677–42538–00	13 – 53
647–42539–00	13 – 54
647–42541–00	13 – 56
655–42542–00	13 – 57
606–42591–00	2 – 22
677–42610–10	2 – 1
6G1–42615–00	2 – 4
677–4261A–00	2 – 2
677–42647–00	2 – 5
677–42651–02	2 – 6
626–42658–00	6 – 18
677–42675–10	2 – 9
677–42676–10	2 – 10
6N0–42678–40	2 – 8
6E0–42681–40	2 – 11
	2 – 12
677–42711–74–8D	2 – 13
655–42715–00	11 – 43
677–42724–00	2 – 20
677–42725–00	2 – 21
6EE–42794–40	2 – 26
677–42815–00–8D	2 – 14
656–42816–00	2 – 17
620–43111–02–8D	13 – 1
620–43112–01–8D	13 – 2
6E7–43113–01	13 – 10
620–43114–00	13 – 3
677–43116–01	13 – 4
663–43118–01–8D	13 – 5
6L4–43160–00	13 – 33
689–43165–00	13 – 34
647–43181–00	13 – 24
620–43189–00	13 – 22
677–43311–01–8D	13 – 15

PART NO. 零件号码	REF. NO.
647–43312–00–8D	13 – 19
654–43313–00–94	13 – 21
655–43318–00–4D	13 – 16
647–43613–00	13 – 48
647–43614–00	13 – 42
647–43615–01	13 – 43
677–43616–00	13 – 41
647–43627–01	13 – 47
677–43630–00	13 – 37
620–43632–00	13 – 25
647–43659–00	13 – 49
655–44111–02–8D	11 – 40
677–44119–00	11 – 46
655–44121–01	11 – 48
655–44122–03	11 – 42
655–44143–01	11 – 50
616–44145–01	11 – 53
616–44146–01	11 – 54
655–44147–00	15 – 54
655–44150–00	15 – 55
655–44150–10	15 – 55
	20 – 31
655–44311–03	15 – 27
655–44315–A1	15 – 28
	20 – 6
	20 – 13
	20 – 21
650–44322–01	20 – 11
655–44322–41	15 – 29
	20 – 19
655–44323–01	20 – 14
655–44323–41	15 – 30
	20 – 22
662–44352–01	15 – 32
	20 – 12
	20 – 20
655–44360–00	16 – 6
655–44360–10	16 – 6
	20 – 32
655–44365–00	16 – 8
	19 – 16
	20 – 33
647–44366–00	15 – 31
	20 – 16
	20 – 24
655–44373–00	16 – 9
	20 – 34
677–45111–01–8D	14 – 1

PART NO. 零件号码	REF. NO.
677–45113–A1	14 – 2
	19 – 15
647–45151–01	14 – 5
647–45211–10–8D	14 – 8
	20 – 26
655–45214–02–4D	15 – 6
626–45215–00	15 – 8
677–45251–00	1 – 7
	15 – 14
6E0–45251–12	1 – 8
	16 – 2
677–45300–01–8D	15 – 1
677–45300–11–8D	15 – 1
655–45311–02–8D	15 – 2
677–45315–A1	15 – 20
	20 – 4
647–45316–09	15 – 3
	15 – 18
647–45331–00–94	15 – 17
655–45361–02–8D	15 – 22
655–45501–00	15 – 36
655–45501–10	15 – 36
	20 – 30
647–45533–00	15 – 38
647–45533–20	15 – 38
647–45533–30	15 – 38
647–45533–40	15 – 38
647–45533–50	15 – 38
647–45533–60	15 – 38
647–45551–00	15 – 37
647–45560–00	15 – 41
647–45567–00	15 – 43
647–45570–01	15 – 44
626–45577–00	15 – 46
626–45577–10	15 – 46
626–45577–20	15 – 46
626–45577–30	15 – 46
626–45577–40	15 – 46
677–45611–01	15 – 52
647–45616–02	16 – 10
655–45631–00	15 – 47
654–45635–00	15 – 51
647–45941–00	16 – 12
647–45943–00	16 – 12
655–45943–00	16 – 12
655–45945–00	16 – 12
647–45947–00	16 – 12
655–45947–01	16 – 12

NUMERICAL INDEX
零件号码索引

PART NO. 零件号码	REF. NO.
655–45949–00	16 – 12
647–48330–50	12 – 10
617–48331–91	12 – 14
647–48340–50	12 – 16
647–48346–50	12 – 17
617–48346–90	12 – 11
617–48361–91	12 – 20
655–48501–02	12 – 1
655–48501–10	12 – 1
700–48510–12	12 – 22
676–48511–10	12 – 23
655–48531–51	12 – 2
647–48534–50	12 – 5
655–48541–00–8D	11 – 29
676–81970–01	18 – 9
648–81970–41	18 – 5
648–81977–40	18 – 6
648–81978–40	18 – 7
6EE–81994–40	11 – 57
6EE–81995–40	11 – 58
663–82151–00	18 – 10
648–82151–41	18 – 8
682–82370–00	10 – 11
6E3–82370–21	10 – 11
682–82556–00	2 – 24
677–82575–20	2 – 23
689–8257Y–00	2 – 25
6K3–83557–00	10 – 12
682–84380–00	18 – 1
682–84381–00	18 – 2
682–84382–00	18 – 3
6K3–85509–70	9 – 3
6G1–85515–70	9 – 14
6E7–85520–70	9 – 4
6K3–85525–01	10 – 3
6E7–85533–40	9 – 6
	18 – 4
696–85540–12	10 – 1
6K3–85542–01	10 – 7
6G1–85548–70	9 – 11
6G1–85550–72	9 – 1
6K3–85560–40	9 – 2
6K3–85560–70	9 – 2
6G1–85570–02	10 – 5
6E7–85580–70	9 – 5
677–W0001–A3	19 – 1
677–W0001–C0	20 – 1
677–W0004–00	5 – 2

PART NO. 零件号码	REF. NO.
677–W0072–00–8D	20 – 25
655–W0078–B0	1 – 9
	20 – 9
655–W0078–CA	20 – 17
677–W0090–06–1S	3 – 1
677–W0093–06	19 – 18
656–W2810–02	7 – 12
90101–06336	13 – 11
90101–10M00	13 – 7
90116–06M04	5 – 19
90119–06023	3 – 43
90119–06048	3 – 34
90119–06M15	3 – 9
90119–06M16	3 – 10
90119–06M19	10 – 2
90119–06M34	8 – 7
90119–06M87	8 – 35
90119–06MA3	3 – 37
90119–06MA4	3 – 42
90149–06003	15 – 12
90151–06M01	3 – 19
90152–05011	11 – 17
90152–05M02	15 – 7
90157–05M19	17 – 4
90159–05038	9 – 10
90159–05039	9 – 7
90170–06011	11 – 22
90170–10113	9 – 16
90179–06045	11 – 21
90185–06062	11 – 8
90185–10027	12 – 26
	13 – 9
90201–06060	8 – 8
90201–06068	2 – 18
90201–10120	8 – 28
90201–10126	9 – 17
90201–10M02	11 – 18
90201–10M66	13 – 8
90201–12161	15 – 40
90201–12565	4 – 18
90201–13198	15 – 42
90201–15229	15 – 45
90201–41303	3 – 29
90202–05088	8 – 38
90206–05005	11 – 37
90206–12052	2 – 15
90209–18112	4 – 9
90240–05004	11 – 56

PART NO. 零件号码	REF. NO.
90240–05047	13 – 44
90243–04007	13 – 6
90249–04M05	13 – 38
90250–05036	15 – 53
90254–03003	11 – 30
90266–04M04	2 – 7
90269–02M08	13 – 17
90280–03024	15 – 33
	20 – 10
	20 – 18
90280–04M06	9 – 15
90334–10008	15 – 9
90340–08002	15 – 10
90386–08032	11 – 6
	11 – 25
90386–12069	2 – 16
90387–06504	8 – 34
90387–06M11	13 – 12
90387–14108	15 – 4
90430–06M03	1 – 6
	15 – 13
	20 – 3
90430–08003	1 – 5
	15 – 11
	20 – 2
90445–07M02	3 – 11
90445–07MA3	3 – 12
90445–09082	7 – 9
90445–09163	7 – 10
90445–10M03	3 – 15
90445–11262	16 – 7
90445–11M05	17 – 11
90445–11M06	17 – 9
90464–07015	3 – 13
90467–06016	3 – 14
90467–08004	7 – 11
90467–09M09	3 – 16
90468–10003	13 – 51
90468–10004	5 – 12
90468–10005	8 – 37
	11 – 39
	13 – 45
90480–14M02	5 – 11
90480–16M03	11 – 23
90480–25161	10 – 9
90480–25M18	10 – 10
90501–10071	12 – 13
90501–10227	8 – 30

PART NO. 零件号码	REF. NO.
90501–10264	12 – 19
90501–12274	11 – 45
90501–12M61	15 – 50
90501–16104	13 – 39
90501–23215	11 – 15
90501–26147	13 – 46
90502–10M07	13 – 36
90508–16020	13 – 27
90508–16021	13 – 26
90508–18022	13 – 50
90510–08M04	8 – 6
90560–12075	11 – 2
90560–30085	11 – 3
91490–16010	11 – 52
91490–30030	16 – 11
91690–30008	13 – 35
91690–30010	4 – 13
91690–30012	12 – 15
	12 – 21
91690–40016	11 – 41
91690–40020	8 – 5
92902–04100	9 – 13
92902–05100	9 – 9
92903–06600	5 – 5
	18 – 14
92990–04600	5 – 13
92990–05200	11 – 38
92990–06100	11 – 33
92990–06200	11 – 51
92990–06300	15 – 16
	16 – 4
92990–06600	11 – 32
	13 – 14
92990–08600	12 – 12
	12 – 18
92990–10600	12 – 25
92995–05600	12 – 7
92995–06600	3 – 24
	5 – 8
	8 – 25
	12 – 4
	20 – 29
93101–14M01	3 – 28
	19 – 13
93101–15074	15 – 24
	20 – 8
93101–18050	15 – 19
	20 – 5

PART NO. 零件号码	REF. NO.
93101–20M29	3 – 27
	19 – 14
93102–20M25	3 – 22
	19 – 11
93210–08287	17 – 14
	17 – 16
93210–09165	11 – 47
93210–25032	11 – 5
93210–32738	1 – 4
	7 – 6
	19 – 17
93210–42159	3 – 21
	19 – 10
93210–42M70	3 – 26
	19 – 12
93210–58144	15 – 25
	20 – 7
93306–004U0	15 – 5
93306–00501	15 – 23
93306–204U0	4 – 10
93310–418U0	4 – 7
93430–06M02	8 – 12
93440–30040	15 – 49
93440–47055	4 – 12
93450–13022	4 – 19
93505–16024	11 – 44
93602–14118	4 – 17
93604–08062	14 – 9
	16 – 1
	20 – 27
93604–18080	15 – 34
93605–08041	3 – 8
	14 – 3
93605–29098	15 – 48
93700–06M03	13 – 18
	14 – 7
94702–00217	1 – 2
	3 – 44
94702–00271	1 – 2
	3 – 44
95303–06600	8 – 9
95380–03600	6 – 36
95380–04700	5 – 14
95380–06600	11 – 34
	12 – 9
	13 – 13
95380–06700	5 – 7
95380–08600	7 – 8

PART NO. 零件号码	REF. NO.
95627–06325	5 – 18
95895–06014	15 – 15
95895–06016	16 – 3
97013–06010	18 – 13
97013–06018	5 – 4
97075–08035	13 – 58
97075–10040	12 – 24
97090–06045	12 – 8
97095–05020	12 – 6
97095–06018	3 – 23
	8 – 24
	12 – 3
97095–06020	11 – 7
	20 – 28
97095–06040	20 – 15
	20 – 23
97590–05520	11 – 49
97595–05514	9 – 24
97595–06510	10 – 8
97595–06512	2 – 19
	8 – 27
97595–06516	3 – 30
	8 – 20
	9 – 22
	10 – 4
97595–06520	7 – 2
	8 – 21
	11 – 10
	11 – 55
	14 – 6
	14 – 10
	15 – 21
	15 – 26
	16 – 5
97595–06525	13 – 23
	14 – 4
97595–06535	8 – 22
	11 – 26
97595–06540	11 – 11
	13 – 20
	15 – 35
97595–06625	10 – 6
97802–04008	9 – 12
97802–05020	9 – 8
97880–05025	18 – 12
97890–04005	6 – 20
97980–04112	6 – 14
97980–05220	5 – 17

PART NO. 零件号码	REF. NO.
97985–05210	9 – 20
99001–04600	13 – 40
99001–07600	15 – 39
99530–10014	3 – 17