YAMAHA

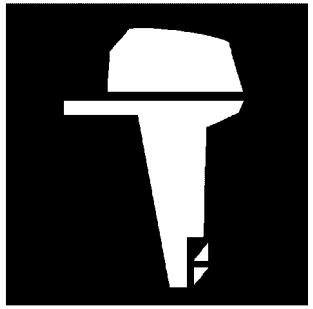

PARTS CATALOGUE
CATALOGO DE REPUESTOS

150AET'17 (6G4J)
200AET'17 (60HJ)
L150AET'17 (6K0J)
L200AET'17 (60JJ)

1R6G4-200SA

( )

YAMAHA GENUINE Parts & Accessories

2018/2/21

NEWS NO.	DATE	COMMENT
PE0-OM-180008	Feb.,19,2018	MOD:FIG.30 LIST REVISION

150AET/200AET
L150AET/L200AET
PARTS CATALOGUE
©2017 by Yamaha Motor Co., Ltd.
1st edition, July 2017
All rights reserved.
Any reprinting or unauthorized use
without the written permission of
Yamaha Motor Co., Ltd.
is expressly prohibited.
Printed in Japan.

150AET/200AET
L150AET/L200AET
CATALOGO DE REPUESTOS
©2017 por Yamaha Motor Co., Ltd.
1ª edición, julio 2017
Todos los derechos reservados.
Toda reproducción o uso no autorizado
sin el consentimiento escrito de
Yamaha Motor Co., Ltd.
quedan expresamente prohibidos
Impreso en Japón.

FOREWORD

This Parts Catalogue is related to the parts for the model(s) on the cover page. When you are ordering replacement parts, please refer to this Parts Catalogue and quote both part numbers and part names correctly.

1. Modifications or additions which have been made after the issue of the Parts Catalogue will be announced in the Parts News.
   It is advisable that you make the necessary corrections to the Parts Catalogue according to the Parts News.

2. Abbreviations
   The following abbreviations are used in this Parts Catalogue.
   "UR" Use specified parts number.
   "UN" Use as many as needed.
   "AP" Alternate Parts
   "LM" Locally Made (Parts need to be ordered locally)
   "F#" Frame No. (Applicable machine No.)
   "O/S" Over Size

3. The number of components for assembly
   - Parts, which are to be supplied in an assembly, are listed with a dot (.) in front of the part name as shown below.
   - The numeral appearing to the right of each component part indicates the quantity of parts for each assembly unit.

PART NO.	DESCRIPTION	Q'TY	REMARKS
2F5–83310–60	FRONT FLASHER LIGHT ASSY	2	
115–83311–60	.BULB (6V–18W)	1	

4. Applicable colours of graphics are represented in the "REMARKS" as shown below.

PART NO.	DESCRIPTION	Q'TY	REMARKS
2N4–24110–00–X5	FUEL TANK COMP.	2	MXR
3J1–24240–10	.GRAPHIC, FUEL TANK	1	FOR MXR

5. Note that the illustrations for reference in finding parts numbers are not to be used for assembling. When assembling, please use the applicable service manual.

6. The asterisk (*) before a reference number indicates modified items after the first edition.

7. Applicable Serial No.
   Engine Serial No.

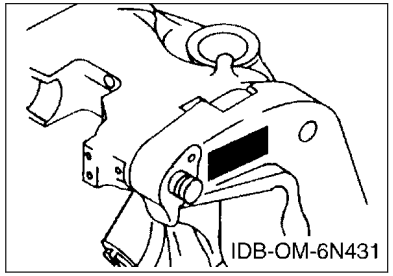

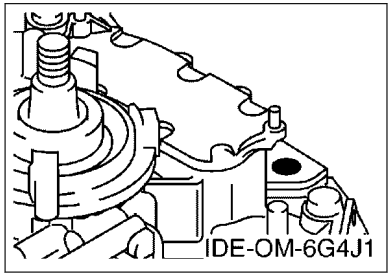

8. Applicable Engine Starting Serial No.

Model	Serial No.	Model	Serial No.
150A	6G4-1024918	200A	6G6-1063824
L150A	6K0-1001391	L200A	6K1-1012454

9. Applicable Colour Code

Abbreviation	Colour Name	Colour Code
DBN1	DARK BLUISH GRAY 1	008D

10. Quantity Column Information

Column No.	Name Of Q'ty Column	Applicable Model
1	6G4J	150AET
2	60HJ	200AET
3	6K0J	L150AET
4	60JJ	L200AET

PROLOGO

Este catálogo de repuestos corresponde a las piezas para el o los modelos que figuran en la página de portada. Al formular el pedido de repuestos, se ruega citar este catálogo y especificar correctamente el número y el nombre de las piezas.

1. Las modificaciones y agregados que se hayan realizado después de la edición de este Catálogo de Repuestos, serán anunciados en las Informaciones de Recambios.
   Es recomendable que se hagan las correcciones necesarias en el Catálogo de Repuestos de acuerdo con las Informaciones de Recambios.

2. Abreviaciones
   En este. Catálogo de Repuestos se emplean las siguientes abreviaciones.
   "UR" Usar el número de partes especificado
   "UN" Usar la cantidad necesaria
   "AP" Piezas sustitutivas
   "LM" Fabricación local (Hay que pedir los repuestos en las cercanías)
   "F#" Nº de bastidor (Nº aplicable a la máquina)
   "O/S" Sobredimensionado

3. La cantidad de componentes para el montaje
   - Los componentes, suministrados como conjunto, se describen con un punto (.) que precede al nombre del parte como se indica a continuación.
   - La numeración que aparece a la derecha de cada descripción indica la cantidad de partes por cada unidad de conjunto.

CODIGO Nº	DESCRIPCION	CANT.	OBSERVACIONES
2F5–83310–60	ENSAMBLAJE DE LA LUZ	2	
115–83311–60	.BOMBILLA (6V–18W)	1	

4. Los colores de los componentes se indican como sigue en la columna de "OBSERVACIONES".

CODIGO Nº	DESCRIPCION	CANT.	OBSERVACIONES
2N4–24110–00–X5	COMP. DEL TANQUE	2	MXR
3J1–24240–10	.GRAFICO, DEL TANQUE	1	PARA MXR

5. Debe tenerse en cuenta que las ilustraciones sirven como guia para la búsqueda de los números de partes y no deben usarse para el montaje. Durante el montaje, se recomienda usar el manual de taller correspondiente.

6. EL asterisco (*) antes del número de referencia indica los elementos modificados después de la primera edición.

7. Números de serie
   Nº de Serie del motor

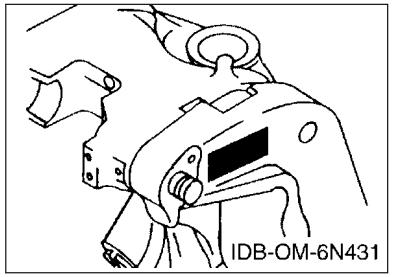

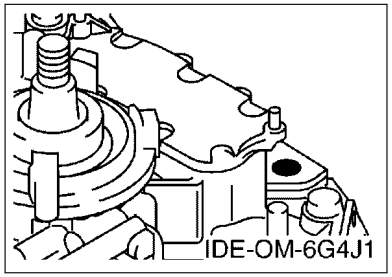

8. Números de serie del motor

Modelo	Nº de serie	Modelo	Nº de serie
150A	6G4-1024918	200A	6G6-1063824
L150A	6K0-1001391	L200A	6K1-1012454

9. Códigos de color aplicables

Abreviatura	Nombre de color	Código de color
DBN1	DARK BLUISH GRAY 1	008D

10. Informacion para la columna de cantidades

Columna Nº	Nombre de la columna de cantidades	Modelo aplicable
1	6G4J	150AET
2	60HJ	200AET
3	6K0J	L150AET
4	60JJ	L200AET

CONTENTS

SCHEDULED SERVICE PARTS.....1
TOP COWLING.....2
CYLINDER & CRANKCASE 1.....3
CRANKSHAFT & PISTON.....4
CYLINDER & CRANKCASE 2.....6
INTAKE.....8
CARBURETOR.....10
FUEL 1.....12
FUEL 2.....14
GENERATOR.....15
ELECTRICAL 1.....16
ELECTRICAL 2.....17
ELECTRICAL 3.....19
STARTING MOTOR.....20
BOTTOM COWLING.....21
CONTROL.....23
BRACKET 1.....25
BRACKET 2.....27
POWER TRIM & TILT ASSY 1.....29
POWER TRIM & TILT ASSY 2.....31
UPPER CASING.....33
LOWER CASING & DRIVE 1.....35
LOWER CASING & DRIVE 2.....39
LOWER CASING & DRIVE 3.....40
LOWER CASING & DRIVE 4.....44
STEERING GUIDE ATTACHMENT 1.....45
STEERING GUIDE ATTACHMENT 2.....46
REMOTE CONTROL BOX.....47
REMOTE CONTROL ASSY 1.....48
REMOTE CONTROL ASSY 2.....51
METER.....54
SWITCH & PANEL.....55
REPAIR KIT 1.....56
REPAIR KIT 2.....58

INDEX

NUMERICAL INDEX.....60

CONTENIDO

PARTES DE REPUESTO TEMPORALES..... 1
SOPORTE SUPERIOR..... 2
CILINDRO & CARTER 1..... 3
CIGUENAL & PISTON.....4
CILINDRO & CARTER 2..... 6
ADMISION..... 8
CARBURADOR..... 10
COMBUSTIBLE 1..... 12
COMBUSTIBLE 2..... 14
GENERADOR.....15
EQUIPO ELECTRICO 1..... 16
EQUIPO ELECTRICO 2..... 17
EQUIPO ELECTRICO 3..... 19
MOTOR DE ARRANQUE..... 20
CUBIERTA INFERIOR..... 21
CONTROL..... 23
SOPORTE 1..... 25
SOPORTE 2..... 27
COMPONER Y PODER VARILLA 1.....29
COMPONER Y PODER VARILLA 2.....31
FUNDA SUPERIOR.....33
IMPULSOR E INFERIOR 1..... 35
IMPULSOR E INFERIOR 2..... 39
IMPULSOR E INFERIOR 3..... 40
IMPULSOR E INFERIOR 4..... 44
ADITAMENTO GUIA DE GOBIERNO 1..... 45
ADITAMENTO GUIA DE GOBIERNO 2..... 46
CONTROL REMOTO COMPLETO..... 47
CONTROL REMOTO COMPL 1.....48
CONTROL REMOTO COMPL 2.....51
MEDIDOR.....54
PANEL DE INTERRUPTOR..... 55
ESTUCHE REPARATION 1..... 56
ESTUCHE REPARATION 2..... 58

INDICE

INDICE NUMERICO..... 60

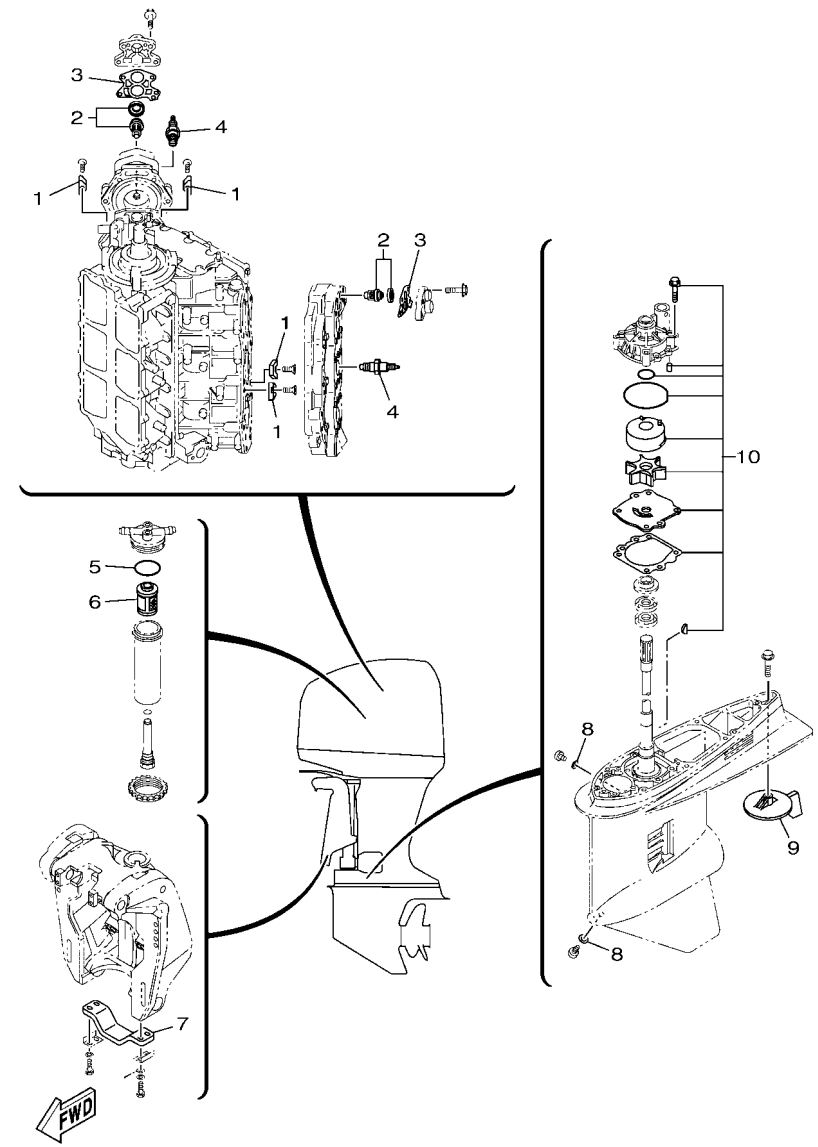

6G4J200-R010

FIG. 1 SCHEDULED SERVICE PARTS — PARTES DE REPUESTO TEMPORALES

REF. NO.	PART NO. CODIGO Nº	DESCRIPTION DESCRIPCION	6G4J	60HJ	6K0J	60JJ		REMARKS OBSERVACIONES
1	6E5–11325–00	ANODE ANODO	8	8	8	8		
2	6E5–12411–30	THERMOSTAT TERMOSTAT	2	2	2	2		
3	688–12414–A1	GASKET, COVER EMPAQUE	2	2	2	2		
4	94702–00160	PLUG, SPARK (NGK B8HS-10) BUJIA (NGK B8HS-10)	6	6	6	6		UR UR
	94702–00247	PLUG, SPARK (NGK BR8HS-10) BUJIA (NGK BR8HS-10)	6	6		6		UR CHN,BLZ,CAR(CE) UR CHN,BLZ,CAR(CE)
5	61A–24564–00	O-RING ANILLO O	1	1	1	1		
6	61A–24563–00	ELEMENT, FILTER ELEMENTO DEL FILTRO	1	1	1	1		
7	6G5–45251–02	ANODE CATODE	1	1	1	1		
8	90430–08003	GASKET JUNTA	2	2	2	2		
9	6J9–45371–01	TAB-TRIM QUILLA ESTABILIZADOR	1	1				
	6K1–45371–02	TAB-TRIM QUILLA ESTABILIZADOR			1	1		
10	61A–W0078–A3	WATER PUMP REPAIR KIT ESTUCHE REPARACION BOMBA AGUA	1	1	1	1		

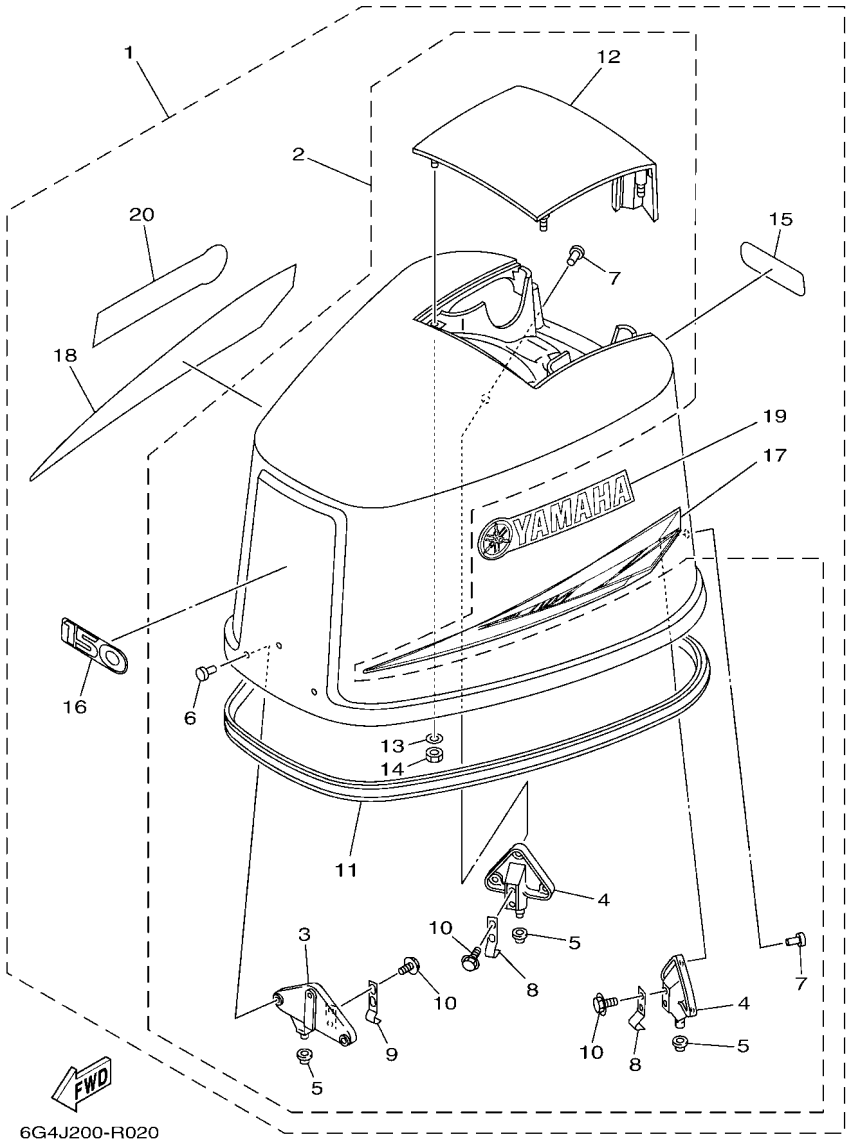

6G4J200-R020

FIG. 2 TOP COWLING — SOPORTE SUPERIOR

REF. NO.	PART NO. CODIGO Nº	DESCRIPTION DESCRIPCION	6G4J	60HJ	6K0J	60JJ		REMARKS OBSERVACIONES
1	6G4–42610–01	TOP COWLING ASSY SOPORTE SUPERIOR COMPL.	1		1			
	6G6–42610–01	TOP COWLING ASSY SOPORTE SUPERIOR COMPL.		1		1		
2	6G5–4261A–01	.TOP COWLING W/O GRAPHICS .SOPORTE SUPERIOR SIN GRAFICOS	1	1	1	1		
3	6E5–42647–00–1S	..HOLDER, CLAMP BAND ..MORDAZA DE ABRAZADERA	1	1	1	1		
4	6E5–42649–01–1S	..HOLDER, CLAMP BAND ..MORDAZA DE ABRAZADERA	2	2	2	2		
5	663–42662–00	..DAMPER ..AMORTIGUADOR	3	3	3	3		
6	90266–06009	..RIVET ..REMACHE	3	3	3	3		
7	90266–06M02	..RIVET ..REMACHE	6	6	6	6		
8	6E5–42652–00	..HOOK ..GANCHO	2	2	2	2		
9	688–42652–00	..HOOK ..GANCHO	1	1	1	1		
10	97595–06516	..BOLT, WITH WASHER ..PERNO CON ARANDELA	6	6	6	6		
11	6E5–42615–00	..SEAL ..SELLO	1	1	1	1		
12	6G5–42613–00–8D	..MOLDING, AIR DUCT ..MOLDURA CONDUCTO AIRE	1	1	1	1		
13	92990–06600	..WASHER, PLATE ..ARANDELA PLANA	4	4	4	4		
14	95380–06600	..NUT, HEXAGON ..TUERCA	4	4	4	4		
15	6G4–42678–40	.GRAPHIC, REAR .CALCAMONIA TRASERA	1		1			
	6G6–42678–40	.GRAPHIC, REAR .CALCAMONIA TRASERA		1		1		
16	6G4–42677–50	.GRAPHIC, FRONT .CALCAMONIA FRONTAL	1		1			
	6G6–42677–50	.GRAPHIC, FRONT .CALCAMONIA FRONTAL		1		1		
17	6N7–42675–60	.GRAPHIC, SIDE 1 .CALCAMONIA LATERAL 1	1	1	1	1		
18	6N7–42676–60	.GRAPHIC, SIDE 2 .CALCAMONIA LATERAL 2	1	1	1	1		
19	688–42681–70	.MARK, COWLING .MARCA DE CUBIERTA	1	1	1	1		
20	688–42681–70	.MARK, COWLING .MARCA DE CUBIERTA	1	1	1	1		

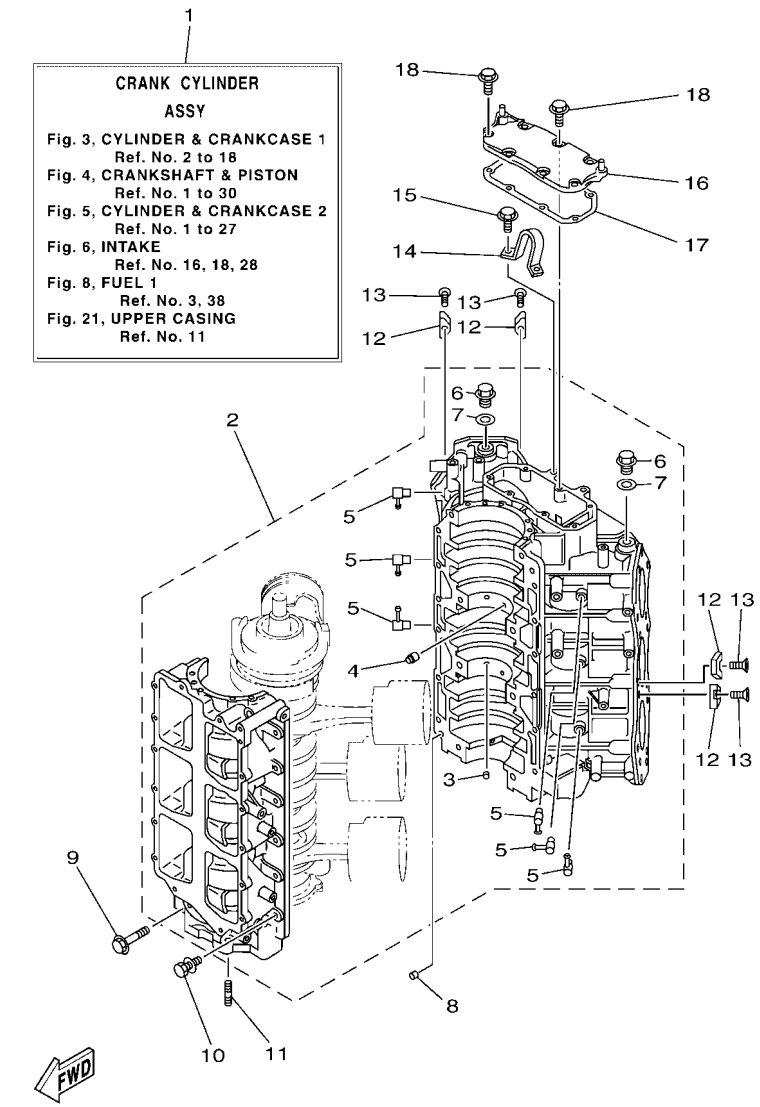

6G4J200-R030

FIG. 3 CYLINDER & CRANKCASE 1 — CILINDRO & CARTER 1

REF. NO.	PART NO. CODIGO Nº	DESCRIPTION DESCRIPCION	6G4J	60HJ	6K0J	60JJ		REMARKS OBSERVACIONES
1	64C–W0090–05–1S	CRANK CYLINDER ASSY BLOQUE MOTOR COMPLETO	1		1			
	60H–W0090–02–1S	CRANK CYLINDER ASSY BLOQUE MOTOR COMPLETO		1		1		
2	64C–15100–23	CRANKCASE ASSY CARTER COMPLETO	1		1			
	60H–15100–01	CRANKCASE ASSY CARTER COMPLETO		1		1		
3	624–11379–00	.VALVE, CHECK .VALVULA DE CONTROL	2	2	2	2		
4	663–11518–01	.LOCK, BEARING .SEGURO BALERO	2	2	2	2		
5	646–11370–01	.CHECK VALVE ASSY .VALVULA DE CONTROL COMPL.	6	6	6	6		
6	90340–14M06	.PLUG, STRAIGHT SCREW .TORNILLO, DE DRENAJE	2	2	2	2		
7	90430–14115	.GASKET .JUNTA	2	2	2	2		
8	93608–12063	PIN, DOWEL PASADOR DE CLAVIJA	2	2	2	2		
9	90105–10M20	BOLT, FLANGE TORNILLO	8	8	8	8		
10	90119–08M94	BOLT, WITH WASHER TORNILLO CON ARANDELA	12	12	12	12		
11	90116–08026	BOLT, STUD ESPARRAGO	2	2	2	2		
12	6E5–11325–00	ANODE ANODO	8	8	8	8		
13	98780–04015	SCREW, FLAT HEAD TORNILLO CABEZA PLANA	8	8	8	8		
14	6E5–11119–01	HANGER, ENGINE SOPORTE DEL MOTOR	1	1	1	1		
15	90119–08MA3	BOLT, WITH WASHER TORNILLO CON ARANDELA	2	2	2	2		
16	6E5–11371–00–1S	COVER CUBIERTA 1	1	1	1	1		
17	6E5–11381–A2	GASKET 1 EMPAQUE 1	1	1	1	1		
18	90119–06MA2	BOLT, WITH WASHER TORNILLO CON ARANDELA	7	7	7	7		

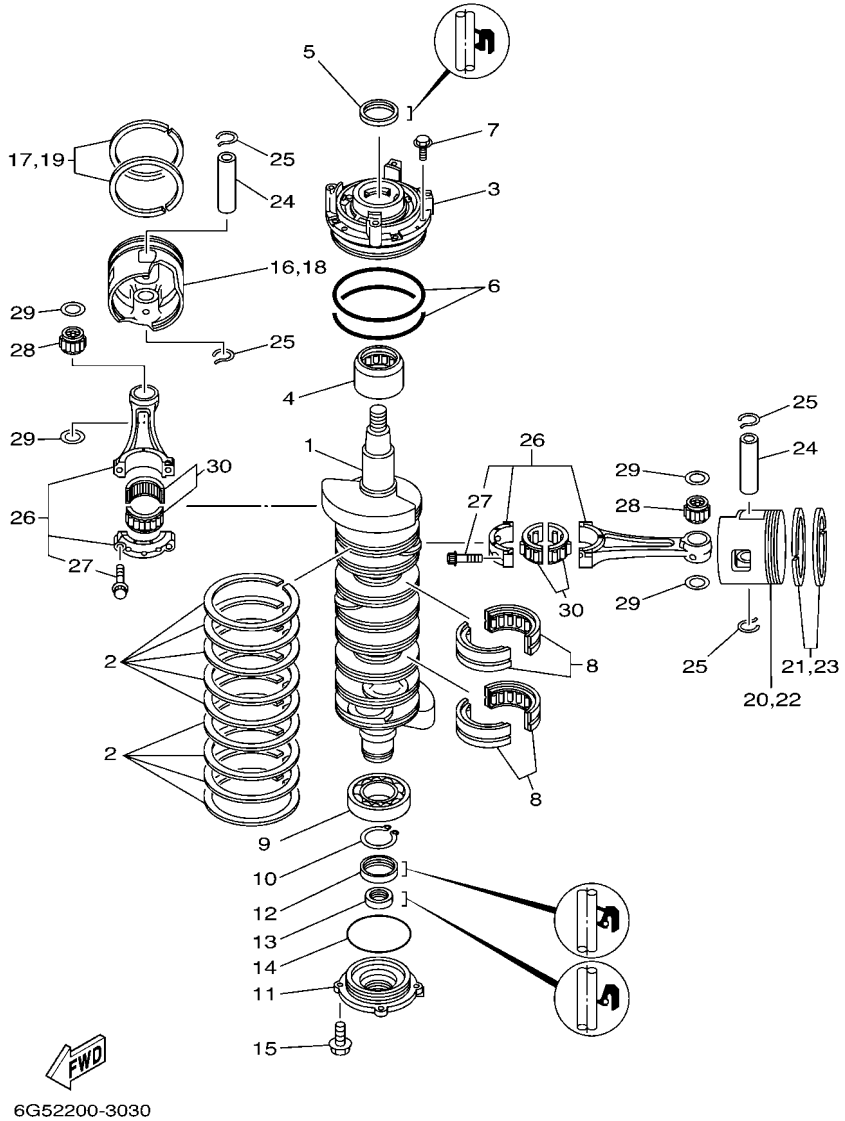

FIG. 4 CRANKSHAFT & PISTON — CIGUENAL & PISTON

REF. NO.	PART NO. CODIGO Nº	DESCRIPTION DESCRIPCION	6G4J	60HJ	6K0J	60JJ		REMARKS OBSERVACIONES
1	6G5–11411–02	CRANKSHAFT CIGUENAL	1	1	1	1		
2	6E5–11447–00	SEAL, CRANK SELLO MANIVELA	9	9	9	9		
3	6E5–15163–00–1S	HOUSING, BEARING 1 CAJA DE COJINETE 1	1	1	1	1		
4	93311–940U3	BEARING COJINETE DE RODILLOS	1	1	1	1		
5	93102–40M14	OIL SEAL SELLO ACEITE	1	1	1	1		
6	93211–04001	O-RING ANILLO O	2	2	2	2		
7	90119–06MA2	BOLT, WITH WASHER TORNILLO CON ARANDELA	4	4	4	4		
8	93310–954U1	BEARING COJINETE DE RODILLOS	2	2	2	2		
9	93306–20802	BEARING COJINETE	1	1	1	1		
10	93410–40M03	CIRCLIP SEGURO	1	1	1	1		
11	6G5–15359–00–94	HOUSING, OIL SEAL CAJA DE SELLO DE ACEITE	1	1	1	1		
12	93102–35M61	OIL SEAL SELLO ACEITE	1	1	1	1		
13	93101–22M15	OIL SEAL SELLO ACEITE	1	1	1	1		
14	93210–74M35	O-RING ANILLO O	1	1	1	1		
15	90119–06MA2	BOLT, WITH WASHER TORNILLO CON ARANDELA	4	4	4	4		
16	64D–11631–02–90	PISTON (STD) PISTON (NORMA)	2	2	2	2		#3,5 #3,5
	64D–11635–02	PISTON (0.25MM O/S) PISTON (0.25MM O/S)	2	2	2	2		AP-#3,5 AP-#3,5
	64D–11636–02	PISTON (0.50MM O/S) PISTON (0.50MM O/S)	2	2	2	2		AP-#3,5 AP-#3,5
17	64D–11603–02	PISTON RING SET (STD) JUEGO DE ANILLOS (NORMA)	2	2	2	2		#3,5 #3,5
	64D–11604–02	PISTON RING SET (0.25MM O/S) JUEGO DE ANILLOS (0.25MM O/S)	2	2	2	2		AP-#3,5 AP-#3,5
	64D–11605–02	PISTON RING SET (0.50MM O/S) JUEGO DE ANILLOS (0.50MM O/S)	2	2	2	2		AP-#3,5 AP-#3,5
18	64D–11631–22–90	PISTON (STD) PISTON (NORMA)	1	1	1	1		#1 #1
	64D–11635–22	PISTON (0.25MM O/S) PISTON (0.25MM O/S)	1	1	1	1		AP-#1 AP-#1
	64D–11636–22	PISTON (0.50MM O/S) PISTON (0.50MM O/S)	1	1	1	1		AP-#1 AP-#1
19	64D–11603–02	PISTON RING SET (STD) JUEGO DE ANILLOS (NORMA)	1	1	1	1		#1 #1
	64D–11604–02	PISTON RING SET (0.25MM O/S) JUEGO DE ANILLOS (0.25MM O/S)	1	1	1	1		AP-#1 AP-#1
	64D–11605–02	PISTON RING SET (0.50MM O/S) JUEGO DE ANILLOS (0.50MM O/S)	1	1	1	1		AP-#1 AP-#1

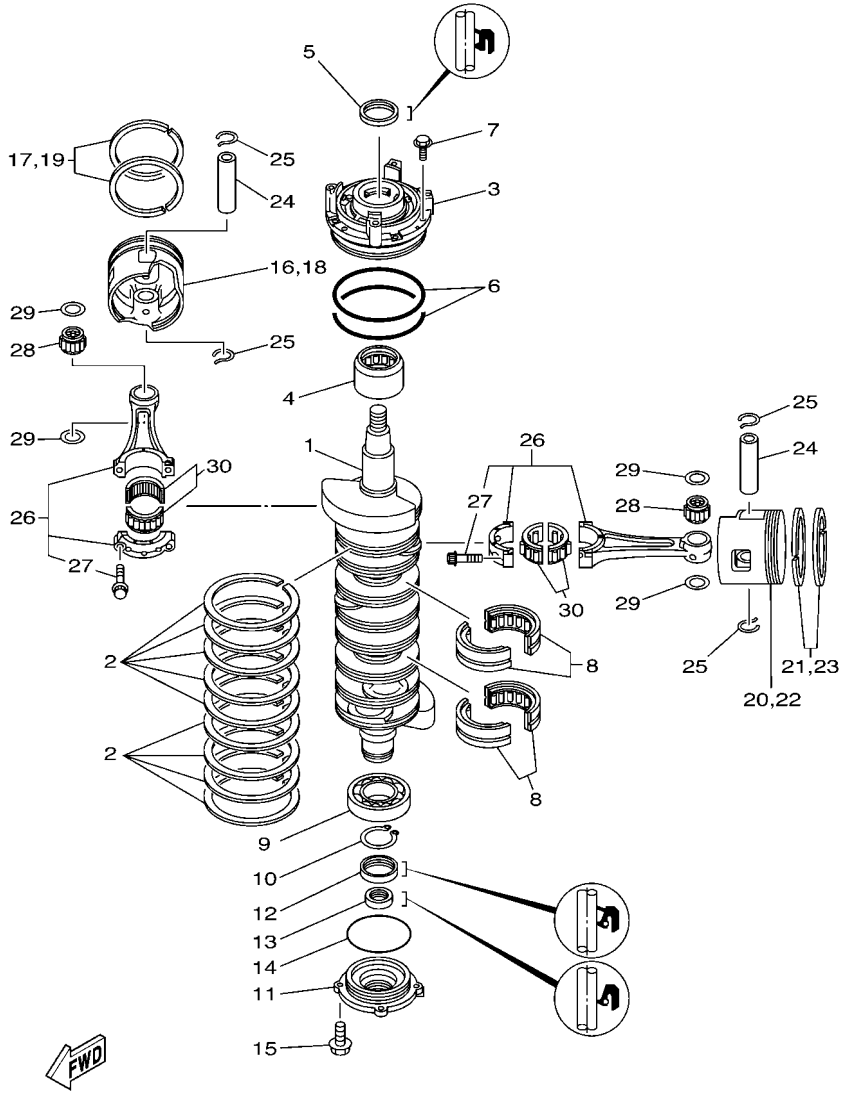

FIG. 4 CRANKSHAFT & PISTON — CIGUENAL & PISTON

REF. NO.	PART NO. CODIGO Nº	DESCRIPTION DESCRIPCION	6G4J	60HJ	6K0J	60JJ		REMARKS OBSERVACIONES
20	64D–11642–02–90	PISTON 2 (STD) PISTON 2 (NORMA)	2	2	2	2		#4,6 #4,6
	64D–11645–02	PISTON 2 (0.25MM O/S) PISTON 2 (0.25MM O/S)	2	2	2	2		AP-#4,6 AP-#4,6
	64D–11646–02	PISTON 2 (0.50MM O/S) PISTON 2 (0.50MM O/S)	2	2	2	2		AP-#4,6 AP-#4,6
21	64D–11603–02	PISTON RING SET (STD) JUEGO DE ANILLOS (NORMA)	2	2	2	2		#4,6 #4,6
	64D–11604–02	PISTON RING SET (0.25MM O/S) JUEGO DE ANILLOS (0.25MM O/S)	2	2	2	2		AP-#4,6 AP-#4,6
	64D–11605–02	PISTON RING SET (0.50MM O/S) JUEGO DE ANILLOS (0.50MM O/S)	2	2	2	2		AP-#4,6 AP-#4,6
22	64D–11642–22–90	PISTON 2 (STD) PISTON 2 (NORMA)	1	1	1	1		#2 #2
	64D–11645–22	PISTON 2 (0.25MM O/S) PISTON 2 (0.25MM O/S)	1	1	1	1		AP-#2 AP-#2
	64D–11646–22	PISTON 2 (0.50MM O/S) PISTON 2 (0.50MM O/S)	1	1	1	1		AP-#2 AP-#2
23	64D–11603–02	PISTON RING SET (STD) JUEGO DE ANILLOS (NORMA)	1	1	1	1		#2 #2
	64D–11604–02	PISTON RING SET (0.25MM O/S) JUEGO DE ANILLOS (0.25MM O/S)	1	1	1	1		AP-#2 AP-#2
	64D–11605–02	PISTON RING SET (0.50MM O/S) JUEGO DE ANILLOS (0.50MM O/S)	1	1	1	1		AP-#2 AP-#2
24	6R5–11633–10	PIN, PISTON PASADOR, PISTON	6	6	6	6		
25	6R5–11634–10	CLIP, PISTON PIN PRESILLA, BULON DE PISTON	12	12	12	12		
26	60H–11650–00	CONNECTING ROD ASSY BIELA COMPLETA	6	6	6	6		
27	90109–08022	.BOLT .PERNO	2	2	2	2		
28	93310–32337	BEARING COJINETE DE RODILLOS	6	6	6	6		
29	90201–23M01	WASHER, PLATE ARANDELA PLANA	12	12	12	12		
30	93310–836U0	BEARING COJINETE DE RODILLOS	6	6	6	6		

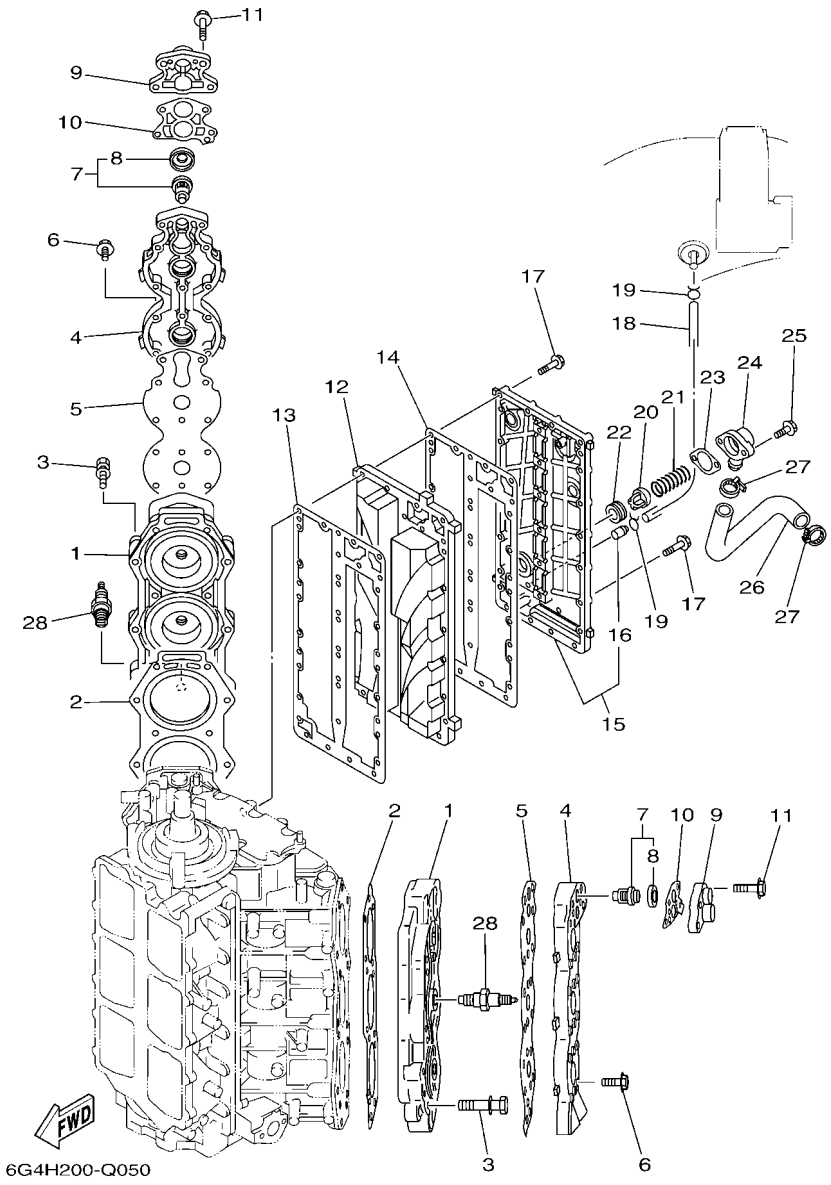

FIG. 5 CYLINDER & CRANKCASE 2 — CILINDRO & CARTER 2

REF. NO.	PART NO. CODIGO Nº	DESCRIPTION DESCRIPCION	6G4J	60HJ	6K0J	60JJ		REMARKS OBSERVACIONES
1	6G5–11111–04–1S	HEAD, CYLINDER 1 CULATA CILINDRO 1	2	2	2	2		
2	6G5–11181–A3	GASKET, CYLINDER HEAD 1 JUNTA, DE CULATA 1	2	2	2	2		
3	90119–08MA8	BOLT, WITH WASHER TORNILLO CON ARANDELA	28	28	28	28		
4	6G5–11191–00–1S	COVER, CYLINDER HEAD 1 TAPA CULATA DE CILINDRO 1	2	2	2	2		
5	6G5–11193–A2	GASKET, HEAD COVER 1 EMPAQUE	2	2	2	2		
6	90119–06MA4	BOLT, WITH WASHER TORNILLO CON ARANDELA	36	36	36	36		
7	6E5–12411–30	THERMOSTAT TERMOSTAT	2	2	2	2		
8	688–12412–00	.SEAL, THERMOSTAT .SELLO TERMOSTATO	1	1	1	1		
9	688–12413–00–1S	COVER, THERMOSTAT CUBIERTA TERMOSTATO	2	2	2	2		
10	688–12414–A1	GASKET, COVER EMPAQUE	2	2	2	2		
11	90119–06MA6	BOLT, WITH WASHER TORNILLO CON ARANDELA	8	8	8	8		
12	64D–41111–00–1S	INNER COVER, EXHAUST CUBIERTA INTERIOR DE ESCAPE	1	1	1	1		
13	6G5–41112–A1	GASKET, EXHAUST INNER COVER EMPAQUE	1	1	1	1		
14	6G5–41114–A0	GASKET, EXHAUST OUTER COVER EMPAQUE	1	1	1	1		
15	6R3–41113–00–1S	OUTER COVER, EXHAUST CUBOERTA EXTERIOR DE ESCAPE	1	1	1	1		
16	650–24378–00	.PIPE, JOINT 4 .TUBO DE UNION 3	1	1	1	1		
17	90119–06MA5	BOLT, WITH WASHER TORNILLO CON ARANDELA	29	29	29	29		
18	90445–09097	HOSE (L250) TUBO (L250)	1	1	1	1		
19	90467–08004	CLIP PRESILLA	2	2	2	2		
20	60H–12416–00	VALVE, PRESSURE CONTROL VALVULA DE CONTROL DE PRESION	1	1	1	1		
21	90501–16M11	SPRING, COMPRESSION RESORTE DE COMPRESION	1	1	1	1		
22	90480–20M05	GROMMET TAPON	1	1	1	1		
23	6G5–11382–A1	GASKET 2 EMPAQUE 2	1	1	1	1		
24	6G5–11372–00–1S	COVER, BYPASS 2 CUBIERTA	1	1	1	1		
25	97595–06520	BOLT, WITH WASHER PERNO CON ARANDELA	2	2	2	2		
26	6G5–12576–00	HOSE 1 MANGUERA 1	1	1	1	1		
27	90465–13M18	CLAMP BRIDA	2	2	2	2		

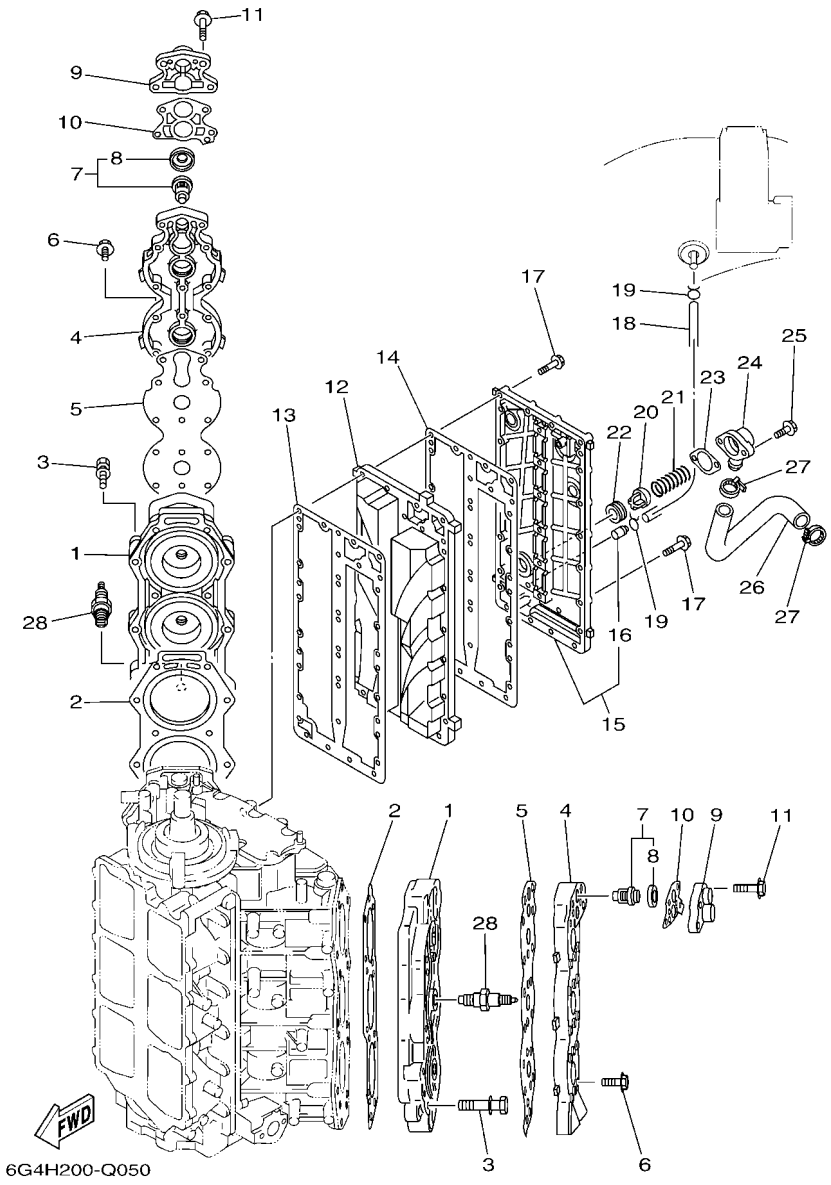

FIG. 5 CYLINDER & CRANKCASE 2 — CILINDRO & CARTER 2

REF. NO.	PART NO. CODIGO Nº	DESCRIPTION DESCRIPCION	6G4J	60HJ	6K0J	60JJ		REMARKS OBSERVACIONES
28	94702–00160	PLUG, SPARK (NGK B8HS-10) BUJIA (NGK B8HS-10)	6	6	6	6		
	94702–00247	PLUG, SPARK (NGK BR8HS-10) BUJIA (NGK BR8HS-10)	6	6		6		CHN,BLZ,CAR(CE) CHN,BLZ,CAR(CE)

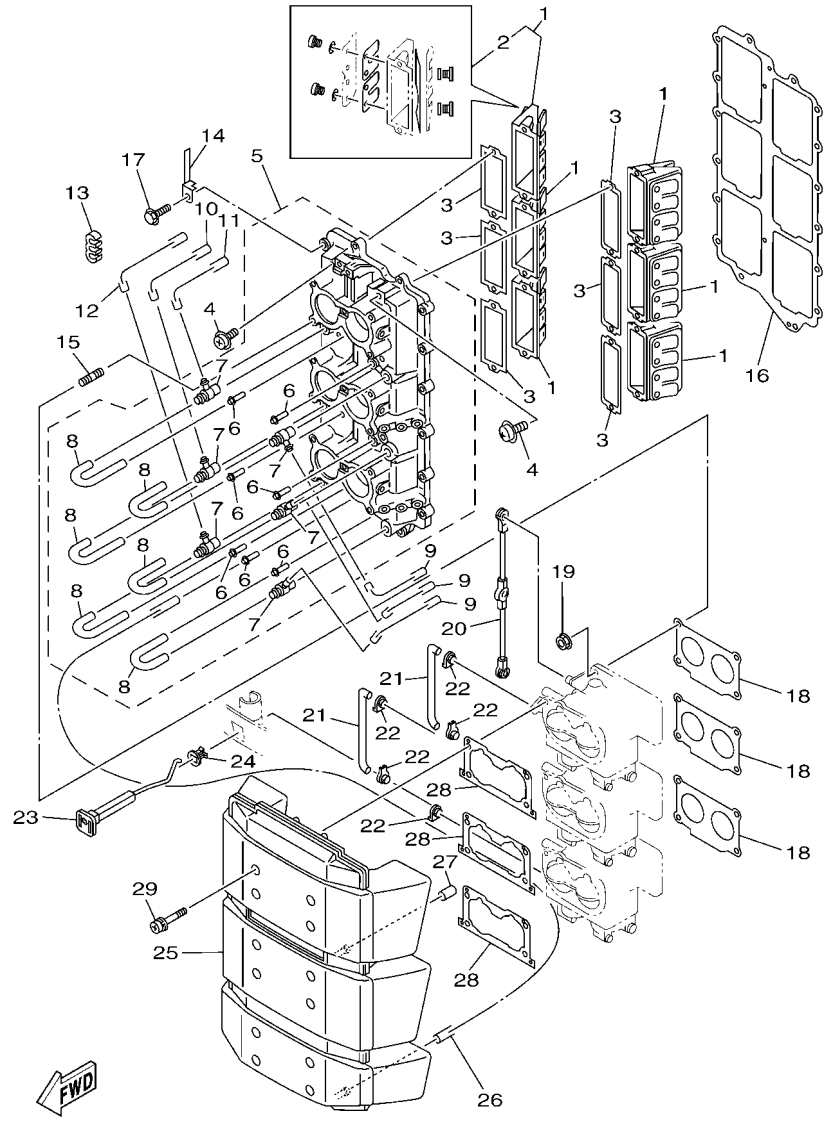

6G4C200-L050

FIG. 6 INTAKE — ADMISION

REF. NO.	PART NO. CODIGO Nº	DESCRIPTION DESCRIPCION	6G4J	60HJ	6K0J	60JJ		REMARKS OBSERVACIONES
1	6G5–13610–00	REED VALVE ASSY VALVULA DE LAMINAS COMPLETA	6		6			
	6E5–13610–00	REED VALVE ASSY VALVULA DE LAMINAS COMPLETA		6		6		
2	6E5–W0004–00	.REED SET .JUEGO DE VALVULAS DE LENGUETA	1	1	1	1		
3	6E5–13621–A1	GASKET, VALVE SEAT JUNTA, DE VALV.DE EMPAQUE	6	6	6	6		
4	97980–05216	SCREW, WITH WASHER TORNILLO, CON ARANDELA	12	12	12	12		
5	6G5–13641–00–1S	MANIFOLD, INTAKE 1 CONECTOR DE ADMISSION 1	1	1	1	1		
6	624–14485–00	.PIPE, JOINT .TUBO DE UNION	7	7	7	7		
7	6E5–11370–01	.CHECK VALVE ASSY .VALVULA DE CONTROL COMPL.	6	6	6	6		
8	90445–07M28	.HOSE (L70) .TUBO (L70)	6	6	6	6		
9	90445–07M45	HOSE (L340) TUBO (L340)	3	3	3	3		
10	90445–07M46	HOSE (L360) TUBO (L360)	1	1	1	1		
11	90445–07M09	HOSE (L380) TUBO (L380)	1	1	1	1		
12	90445–07M59	HOSE (L410) TUBO (L410)	1	1	1	1		
13	90464–07M05	CLAMP BRIDA	2	2	2	2		
14	90465–10M91	CLAMP BRIDA	2	2	2	2		
15	90116–06M30	BOLT, STUD ESPARRAGO	12	12	12	12		
16	6G5–13645–A2	GASKET, MANIFOLD 1 EMPAQUE	1	1	1	1		
17	90119–06MA3	BOLT, WITH WASHER TORNILLO CON ARANDELA	16	16	16	16		
18	6E5–14198–A2	GASKET EMPAQUE	3	3	3	3		
19	90179–06M28	NUT TUERCA	12	12	12	12		
20	6G5–41217–01	ROD, ACCEL. LEVER VARILLA PALANCA ACELERADOR	1	1	1	1		
21	6E5–41256–01	ROD, CHOKE 1 VARILLA DE AHOGADOR	2	2	2	2		
22	661–41262–02	JOINT, CHOKE LEVER CONECTOR DE AHOGADOR	5	5	5	5		
23	6E5–41271–03	KNOB, CHOKE PERILLA AHOGADOR	1	1	1	1		
24	689–41273–00	GROMMET TAPON PROTECTOR	1	1	1	1		
25	6R3–14440–02	SILENCER ASSY, INTAKE SILENCIADOR COMPL DE ADMISION	1	1	1	1		
26	90445–07MA3	HOSE (L200) TUBO (L200)	1	1	1	1		

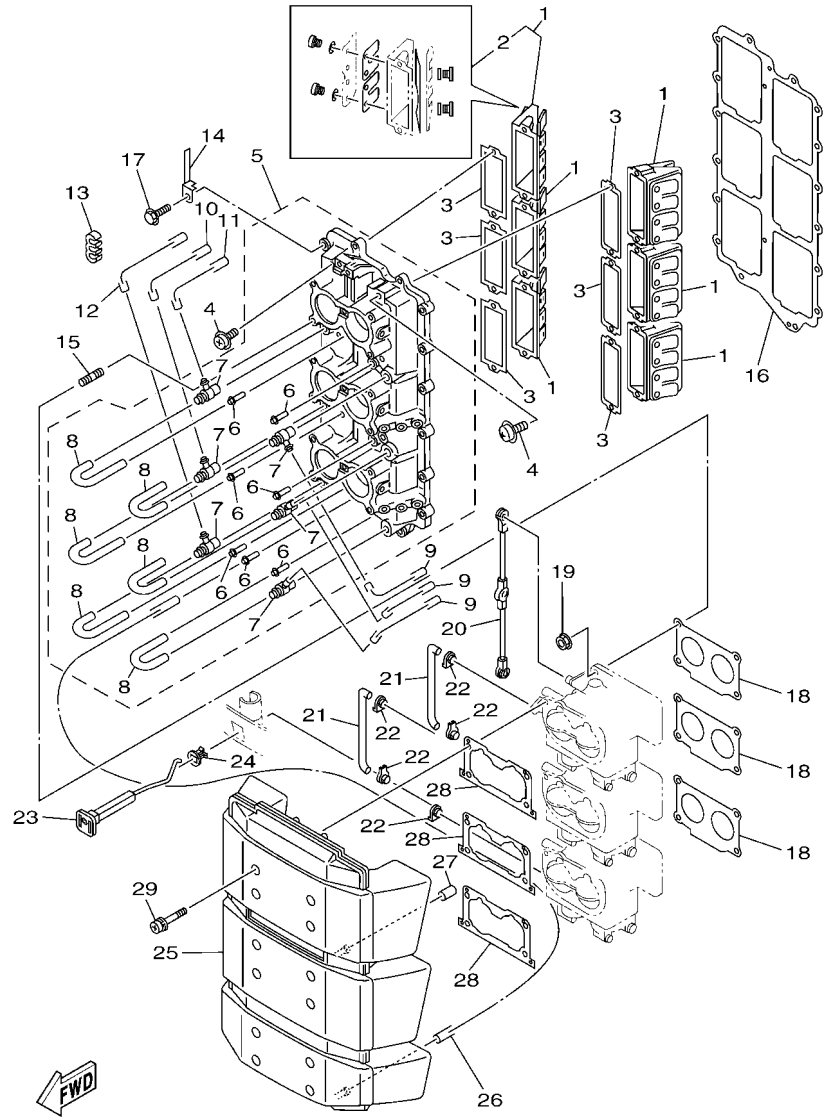

6G4C200-L050

FIG. 6 INTAKE — ADMISION

REF. NO.	PART NO. CODIGO Nº	DESCRIPTION DESCRIPCION	6G4J	60HJ	6K0J	60JJ		REMARKS OBSERVACIONES
27	647–14395–60	CAP, OVERFLOW PIPE TAPA DE TUBO REBOSAMIENTO	1	1	1	1		
28	6K7–14483–00	GASKET EMPAQUE	3	3	3	3		
29	90159–06M14	SCREW, WITH WASHER TORNILLO CON VALONA	12	12	12	12		

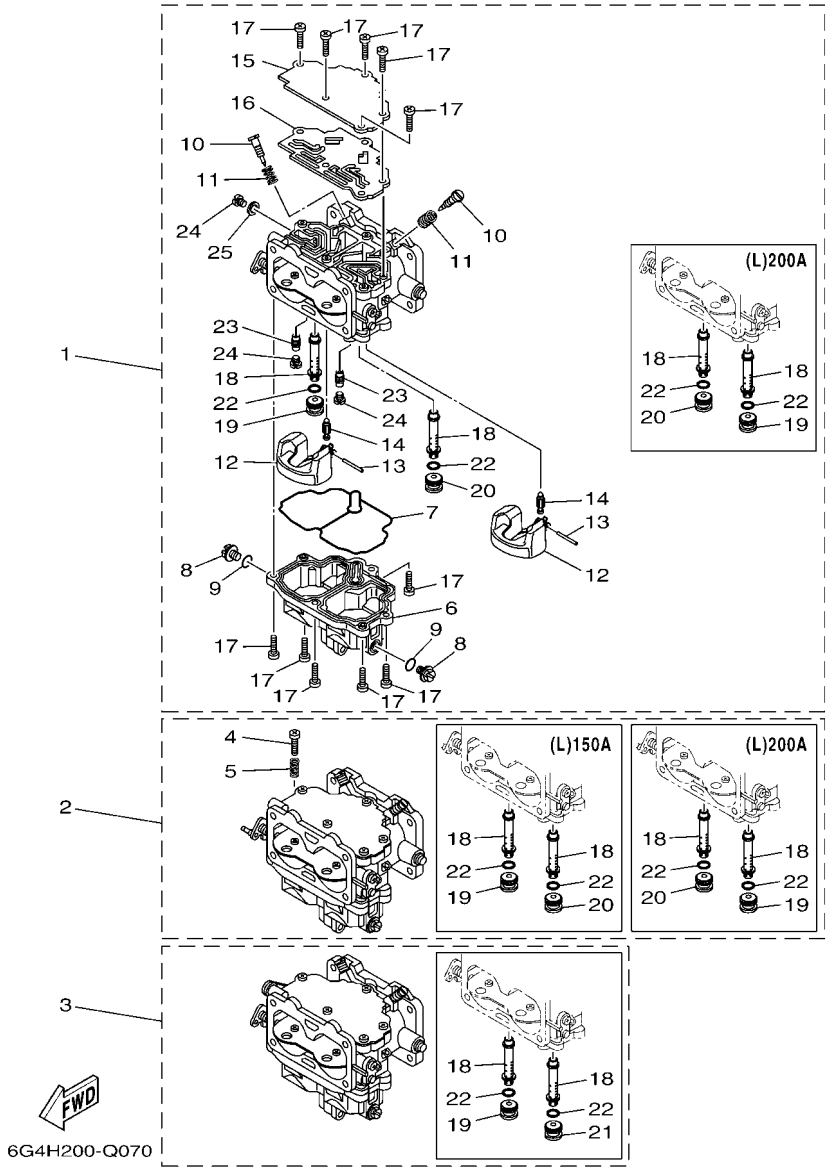

FIG. 7 CARBURETOR CARBURADOR

REF. NO.	PART NO. CODIGO Nº	DESCRIPTION DESCRIPCION	6G4J	60HJ	6K0J	60JJ		REMARKS OBSERVACIONES
1	6G4–14301–20	CARBURETOR ASSY 1 CARBURADOR COMPLETO 1	1		1			
	60H–14301–00	CARBURETOR ASSY 1 CARBURADOR COMPLETO 1		1		1		
2	6G4–14302–20	CARBURETOR ASSY 2 CARBURADOR COMPLETO 2	1		1			
	60H–14302–00	CARBURETOR ASSY 2 CARBURADOR COMPLETO 2		1		1		
3	6G4–14303–20	CARBURETOR ASSY 3 CARBURADOR COMPLETO 3	1		1			
	60H–14303–00	CARBURETOR ASSY 3 CARBURADOR COMPLETO 3		1		1		
4	60H–14523–00	.SCREW, STOP .TORNILLO DE TOPE	1	1	1	1		#2 #2
5	69W–14212–00	.SPRING, PILOT ADJUSTING .RESORTE DE AJUSTE DE PILOTO	1	1	1	1		#2 #2
6	60H–14381–00	.BODY, FLOAT CHAMBER .CUERPO DE CAMARA DE BOIA	3	3	3	3		
7	60H–14384–00	.GASKET, FLOAT CHAMBER .EMPAQUE DE CAMARA DE BOIA	3	3	3	3		
8	62Y–14383–30	.SCREW, DRAIN .TORNILLO DE DRENAJE	6	6	6	6		
9	652–14397–00	.O-RING .ANILLO O	6	6	6	6		
10	60H–14211–00	.SCREW, PILOT ADJUSTING .TORNILLO DE AJUSTE DE PILOTO	6	6	6	6		
11	62Y–14334–00	.SPRING, AIR ADJUSTING .RESORTE DE AJUSTADOR DE AIRE	6	6	6	6		
12	60H–14385–00	.FLOAT .BOIA	6	6	6	6		
13	60H–14386–00	.PIN, FLOAT .PASADOR DE BOIA	6	6	6	6		
14	6C5–14546–10	.VALVE, NEEDLE .VALVULA DE AGUJA	6	6	6	6		
15	60H–14527–00	.PLATE .PLACA	3	3	3	3		
16	60H–14536–00	.GASKET .EMPAQUE	3	3	3	3		
17	6C5–14567–00	.SCREW .TORNILLO	33	33	33	33		
18	60H–14341–00	.NOZZLE, MAIN .BOQUILLA PRINCIPAL	6	6	6	6		
19	6G4–14343–72	.JET, MAIN (#144) .INYECTOR PRINCIPAL (#144)	3		3			
	60H–14343–75	.JET, MAIN (#150) .INYECTOR PRINCIPAL (#150)		3		3		
20	6G4–14343–73	.JET, MAIN (#146) .INYECTOR PRINCIPAL (#146)	2		2			#1,2 #1,2
	60H–14343–74	.JET, MAIN (#148) .INYECTOR PRINCIPAL (#148)		2		2		#1,2 #1,2
21	60H–14343–75	.JET, MAIN (#150) .INYECTOR PRINCIPAL (#150)	1		1			#3 #3
	60H–14343–77	.JET, MAIN (#154) .INYECTOR PRINCIPAL (#154)		1		1		#3 #3

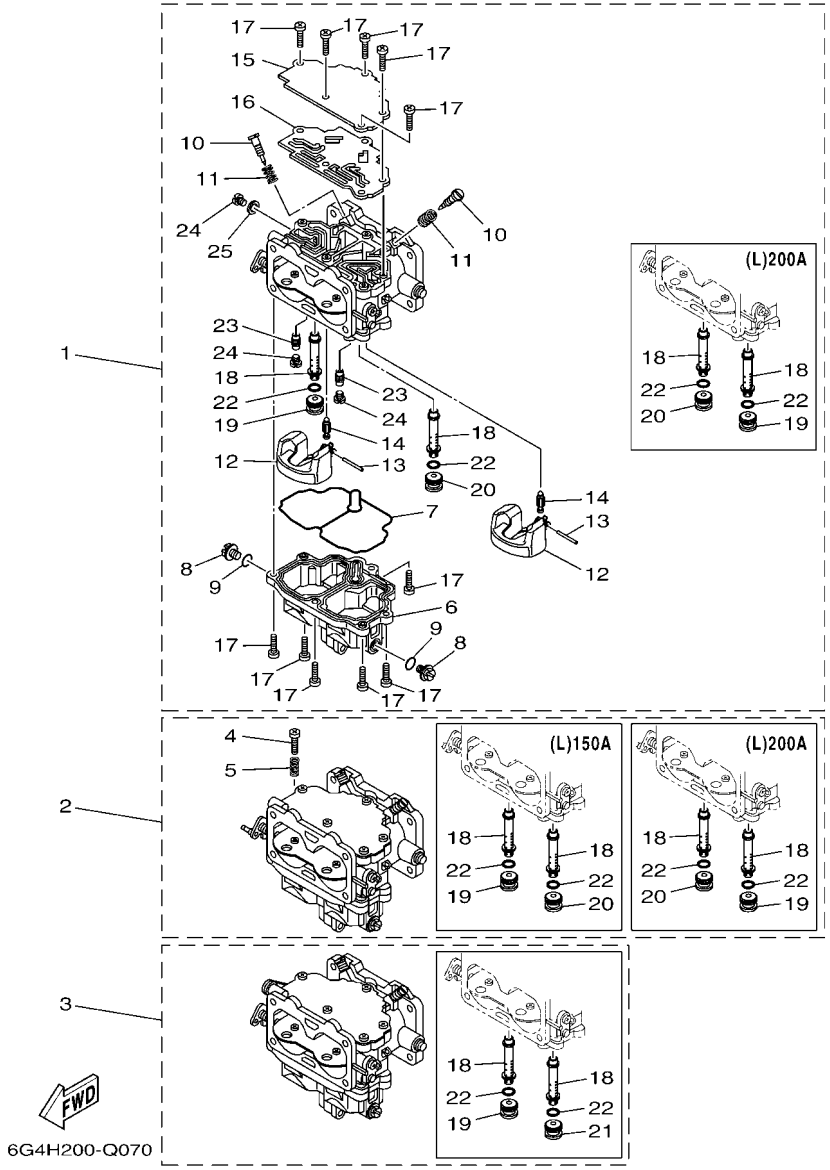

FIG. 7 CARBURETOR CARBURADOR

REF. NO.	PART NO. CODIGO Nº	DESCRIPTION DESCRIPCION	6G4J	60HJ	6K0J	60JJ		REMARKS OBSERVACIONES
22	62Y–14227–00	.O-RING .ANILLO O	6	6	6	6		
23	6G4–14342–43	.JET, PILOT (# 86) .ESPREA DE PILOTO (# 86)	6		6			
	60H–14342–47	.JET, PILOT (# 94) .ESPREA DE PILOTO (# 94)		6		6		
24	66M–14355–00	.PLUG .TAPON	9	9	9	9		
25	60H–14198–00	.GASKET .EMPAQUE	3	3	3	3		

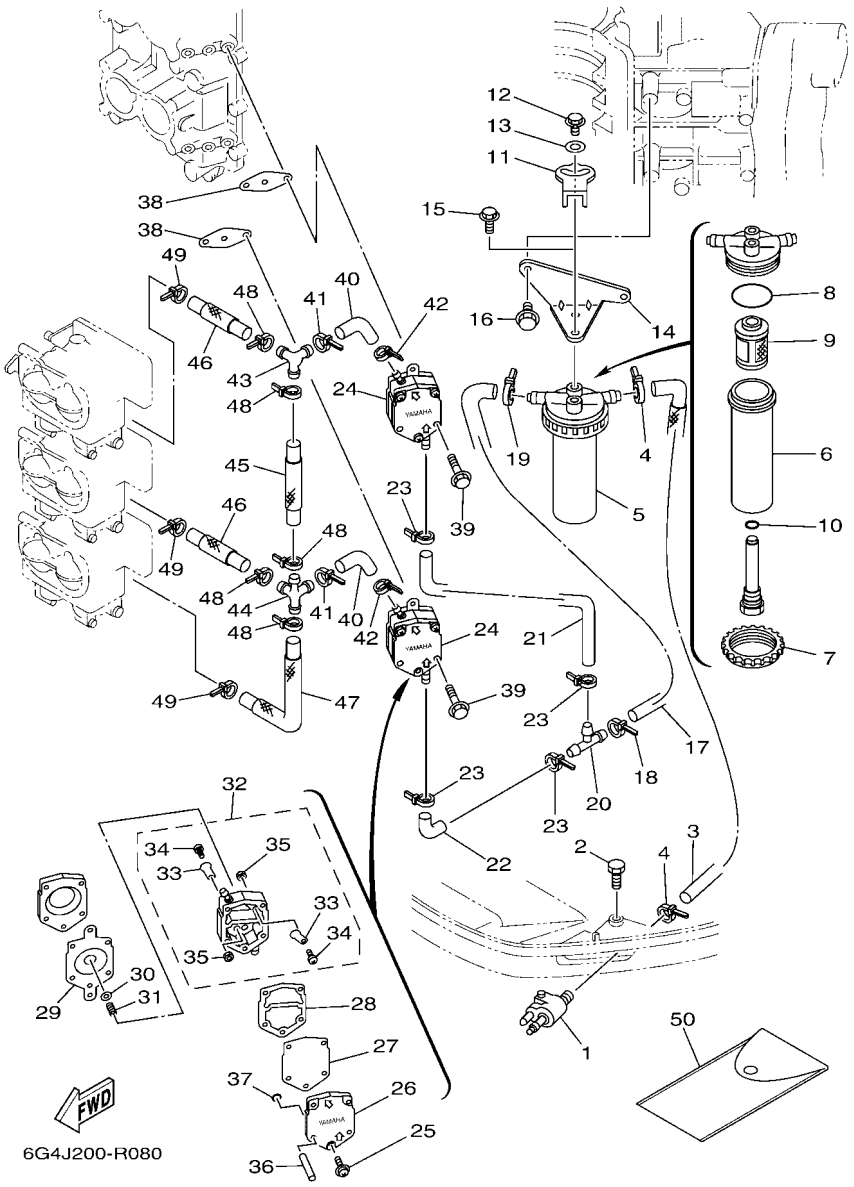

FIG. 8 FUEL 1 — COMBUSTIBLE 1

REF. NO.	PART NO. CODIGO Nº	DESCRIPTION DESCRIPCION	6G4J	60HJ	6K0J	60JJ		REMARKS OBSERVACIONES
1	6E5–24304–20	FUEL PIPE JOINT COMP. 1 CONECTOR MANGUERA COMBUST.1	1	1	1	1		
2	97095–06028	BOLT PERNO	1	1	1	1		
3	60H–24313–00	PIPE 3 TUBO 3	1	1	1	1		
4	90465–11M10	CLAMP BRIDA	2	2	2	2		
5	60H–24560–00	FILTER ASSY FILTRO COMPLETO	1	1	1	1		
6	68F–24521–00	.CUP, FILTER .COPA DE FILTRO	1	1	1	1		
7	65L–24531–01	.NUT .TUERCA	1	1	1	1		
8	61A–24564–00	.O-RING .ANILLO O	1	1	1	1		
9	61A–24563–00	.ELEMENT, FILTER .ELEMENTO DEL FILTRO	1	1	1	1		
10	68F–24649–00	.O-RING .ANILLO O	1	1	1	1		
11	60H–24558–00	HOLDER, FILTER SOPORTE DE FILTRO	1	1	1	1		
12	97595–06416	BOLT, WITH WASHER PERNO CON ARANDELA	1	1	1	1		
13	90201–06068	WASHER, PLATE ARANDELA PLANA	1	1	1	1		
14	61U–24566–01	BRACKET, FILTER SOPORTE DEL FILTRO	1	1	1	1		
15	97595–06514	BOLT, WITH WASHER PERNO CON ARANDELA	1	1	1	1		
16	97595–06516	BOLT, WITH WASHER PERNO CON ARANDELA	2	2	2	2		
17	6G5–24314–10	PIPE 4 TUBO 4	1	1	1	1		
18	90465–11M10	CLAMP BRIDA	1	1	1	1		
19	90465–11M10	CLAMP BRIDA	1	1	1	1		
20	6E5–24378–00	PIPE, JOINT 3 TUBO DE UNION 3	1	1	1	1		
21	6G5–24315–00	PIPE 5 TUBO DE DESAGUE	1	1	1	1		
22	6E5–24315–00	PIPE 5 TUBO DE DESAGUE	1	1	1	1		
23	90465–11M10	CLAMP BRIDA	4	4	4	4		
24	6E5–24410–04	FUEL PUMP ASSY BOMBA DE COMBUSTIBLE COMPLETA	2	2	2	2		
25	6E5–24444–01	.SCREW .TORNILLO	3	3	3	3		
26	6E5–24413–01	.BODY 2 .CUERPO 2	1	1	1	1		
27	6E5–24471–01	.DIAPHRAGM .DIAFRAGMA	1	1	1	1		

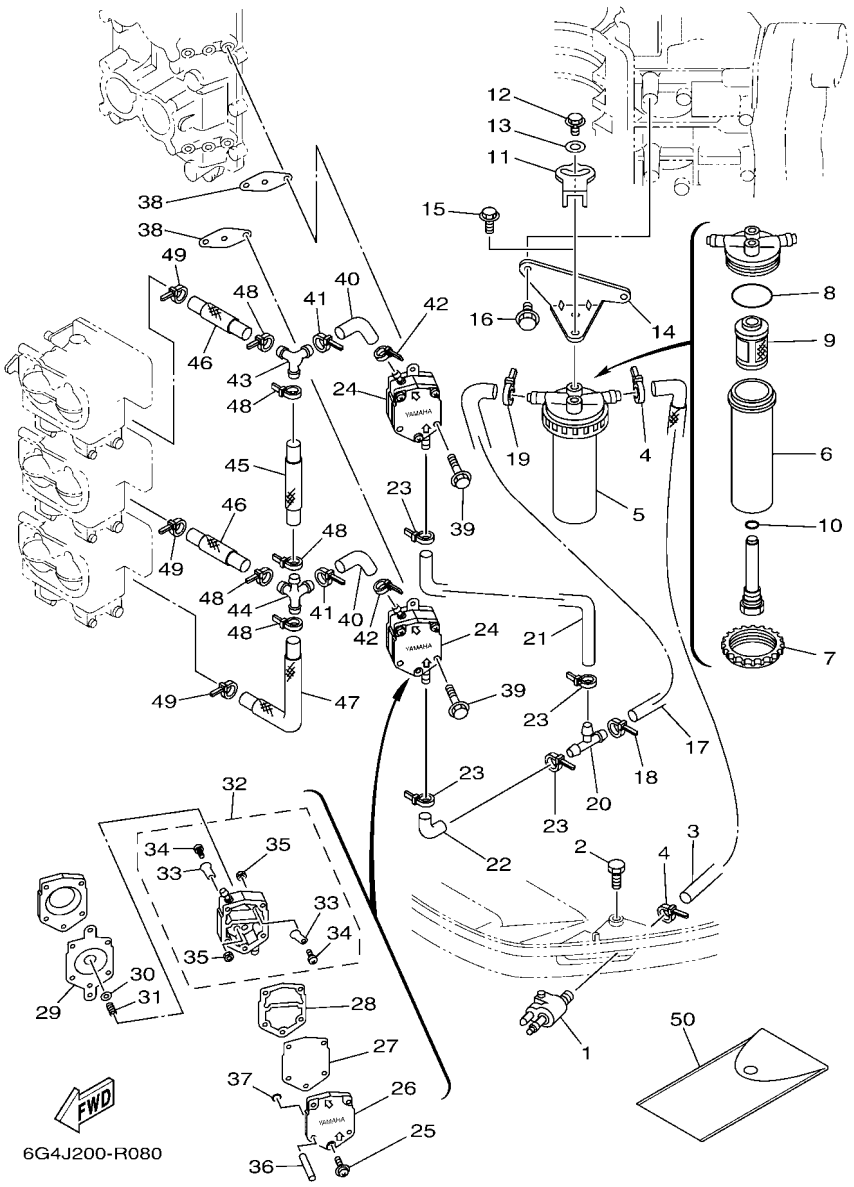

FIG. 8 FUEL 1 — COMBUSTIBLE 1

REF. NO.	PART NO. CODIGO Nº	DESCRIPTION DESCRIPCION	6G4J	60HJ	6K0J	60JJ		REMARKS OBSERVACIONES
28	6E5–24435–01	.GASKET, BODY 2 .EMPAQUE	1	1	1	1		
29	6E5–24411–01	.DIAPHRAGM .DIAFRAGMA	1	1	1	1		
30	648–24424–00	.SEAT, SPRING .PLACA DE RESORTE	1	1	1	1		
31	6E5–24423–00	.SPRING, DIAPHRAGM .RESORTE DE DIAFRAGMA	1	1	1	1		
32	6E5–24412–11	.BODY 1 .CUERPO 1	1	1	1	1		
33	6A0–24421–01	..VALVE, CHECK ..VALVULA DE RETENCION	4	4	4	4		
34	6A0–14325–00	..SCREW, PAN HEAD ..TORNILLO CABEZA REDONDA	4	4	4	4		
35	95380–03600	..NUT ..TUERCA	4	4	4	4		
36	6E5–24492–00	.BUSH, FUEL PUMP .BUJE	2	2	2	2		
37	6E5–24486–00	.O-RING .ANILLO O	2	2	2	2		
38	650–24431–A0	GASKET, FUEL PUMP 1 EMPAQUE BOMBA COMBUST 1	2	2	2	2		
39	97595–06550	BOLT, WITH WASHER PERNO CON ARANDELA	4	4	4	4		
40	6G5–24316–10	PIPE 6 TUBO 6	2	2	2	2		
41	90465–11M10	CLAMP BRIDA	2	2	2	2		
42	90465–11M10	CLAMP BRIDA	2	2	2	2		
43	6G5–24376–00	PIPE, JOINT 1 TUBO DE UNION 1	1	1	1	1		
44	6G5–24377–00	PIPE, JOINT 2 TUBO DE UNION 2	1	1	1	1		
45	60H–24317–00	PIPE 7 TUBO 7	1	1	1	1		
46	60H–24321–00	PIPE 10 TUBO 10	2	2	2	2		
47	60H–24319–00	PIPE, OIL TUBO DE ACEITE	1	1	1	1		
48	90465–11M10	CLAMP BRIDA	5	5	5	5		
49	90465–11M10	CLAMP BRIDA	3	3	3	3		
50	656–W2810–02	TOOL KIT JUEGO DE HERRAMIENTAS	1	1	1	1		AP AP

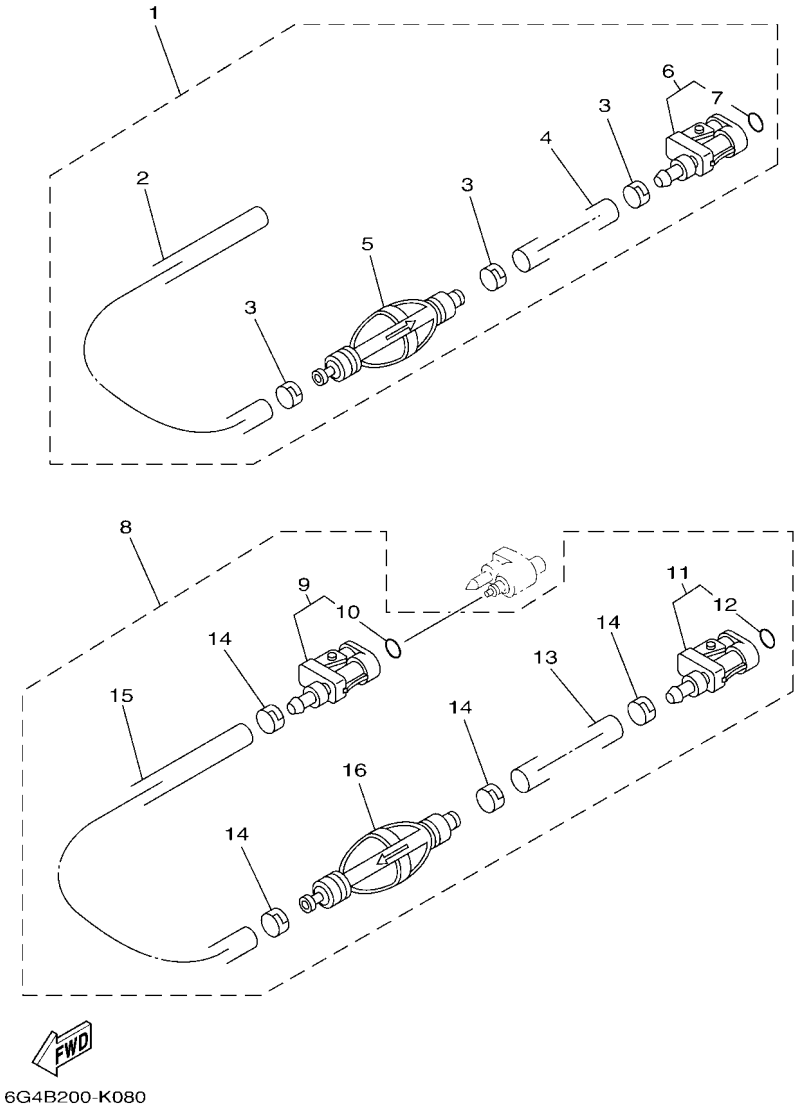

6G4B200-K080

FIG. 9 FUEL 2 — COMBUSTIBLE 2

REF. NO.	PART NO. CODIGO Nº	DESCRIPTION DESCRIPCION	6G4J	60HJ	6K0J	60JJ		REMARKS OBSERVACIONES
1	6Y2–24306–A5	FUEL PIPE COMP. 1 TUBO COMBUST. COMPL 1	1	1	1	1		AP EXCEPT FOR CHN AP EXCEPT FOR CHN
2	90445–13M01	.HOSE (L2050) .MANGUERA (L2050)	1	1	1	1		
3	6E5–24351–51	.BAND 1 .ABRAZADERA 1	3	3	3	3		
4	90445–13M00	.HOSE (L850) .MANGUERA (L850)	1	1	1	1		
5	61J–24360–11	.PRIMER PUMP ASSY .SOPORTE BOMBA	1	1	1	1		
6	6E5–24305–06	.FUEL PIPE JOINT COMP. 2 .CONECTOR MANGUERA COMBUST. 2	1	1	1	1		
7	93210–08287	..O-RING ..ANILLO O	1	1	1	1		
8	6Y2–24306–0B	FUEL PIPE COMP. 1 TUBO COMBUST. COMPL 1	1	1				AP FOR CHN AP FOR CHN
9	6E5–24305–06	.FUEL PIPE JOINT COMP. 2 .CONECTOR MANGUERA COMBUST. 2	1	1				
10	93210–08287	..O-RING ..ANILLO O	1	1				
11	6Y2–24305–06	.FUEL PIPE JOINT COMP. 2 .CONECTOR MANGUERA COMBUST. 2	1	1				
12	93210–08287	..O-RING ..ANILLO O	1	1				
13	90445–13M01	.HOSE (L2050) .MANGUERA (L2050)	1	1				
14	6E5–24351–51	.BAND 1 .ABRAZADERA 1	4	4				
15	90445–13M00	.HOSE (L850) .MANGUERA (L850)	1	1				
16	61J–24360–11	.PRIMER PUMP ASSY .SOPORTE BOMBA	1	1				

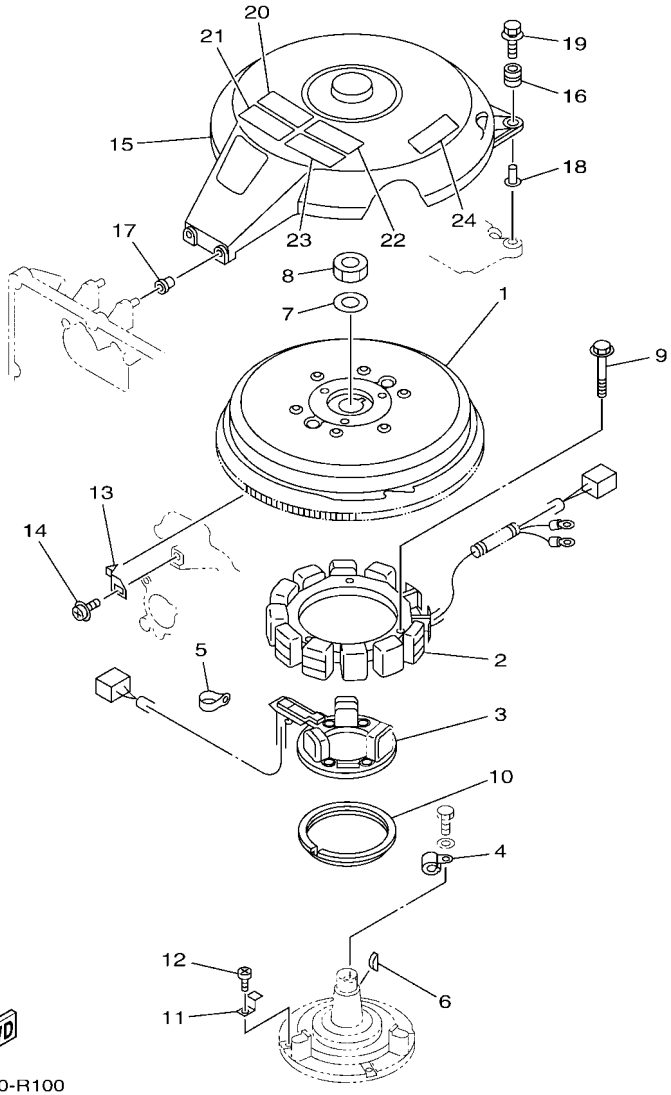

6G4J200-R100

FIG. 10 GENERATOR — GENERADOR

REF. NO.	PART NO. CODIGO Nº	DESCRIPTION DESCRIPCION	6G4J	60HJ	6K0J	60JJ		REMARKS OBSERVACIONES
1	6G6–85550–02	ROTOR ASSY ROTOR COMPLETO	1	1	1	1		
2	6G6–85510–01	STATOR ASSY ESTATOR COMPLETO	1	1	1	1		
3	6G6–85580–00	COIL, PULSER BOBINA DE PULSACION	1	1	1	1		
4	90465–06M86	CLAMP BRIDA	1	1	1	1		
5	90464–12M00	CLAMP BRIDA	1	1	1	1		
6	90280–05015	KEY, WOODRUFF CUNA WOODRUFF	1	1	1	1		
7	90201–21M18	WASHER, PLATE ARANDELA PLANA	1	1	1	1		
8	90170–20137	NUT TUERCA	1	1	1	1		
9	97513–06560	BOLT, WITH WASHER PERNO CON ARANDELA	3	3	3	3		
10	688–41611–00	RETAINER, MAGNETO BASE RETENEDOR BASE MAGNETO	1	1	1	1		
11	688–41612–00	RETAINER, MAGNETO BASE RETENEDOR BASE MAGNETO	4	4	4	4		
12	97880–06018	SCREW, PAN HEAD TORNILLO DE CABEZA CON PLANA	4	4	4	4		
13	6E5–81332–00	PLATE, TIMING PLACA REGULADOR DE TIEMPO	1	1	1	1		
14	97985–06210	SCREW, WITH WASHER TORNILLO, CON ARANDELA	1	1	1	1		
15	6G5–81337–00	COVER, FLYWHEEL CUBIERTA DE VOLANTE	1	1	1	1		
16	6G5–82317–00	DAMPER, IGNITION COIL AMORTIGUADOR BOBINA ENCENDIDO	2	2	2	2		
17	6A0–82317–00	DAMPER, IGNITION COIL AMORTIGUADOR BOBINA ENCENDIDO	2	2	2	2		
18	90387–06119	COLLAR ESPACIADOR	2	2	2	2		
19	90119–06M65	BOLT, WITH WASHER TORNILLO CON ARANDELA	2	2	2	2		
20	6EE–81994–40	LABEL, SAFETY ETIQUETA DE SEGURIDAD	1	1	1	1		
21	6EE–81994–50	LABEL, SAFETY ETIQUETA DE SEGURIDAD	1	1		1		FOR CAR(CE) FOR CAR(CE)
22	6EE–81995–40	LABEL, WARNING ETIQUETA DE PRECAUCION	1	1	1	1		
23	6EE–81995–50	LABEL, WARNING ETIQUETA DE PRECAUCION	1	1		1		FOR CAR(CE) FOR CAR(CE)
24	6AG–81996–00	MARK MARCA	1	1		1		FOR CAR(CE) FOR CAR(CE)

FIG. 11 ELECTRICAL 1 — EQUIPO ELECTRICO 1

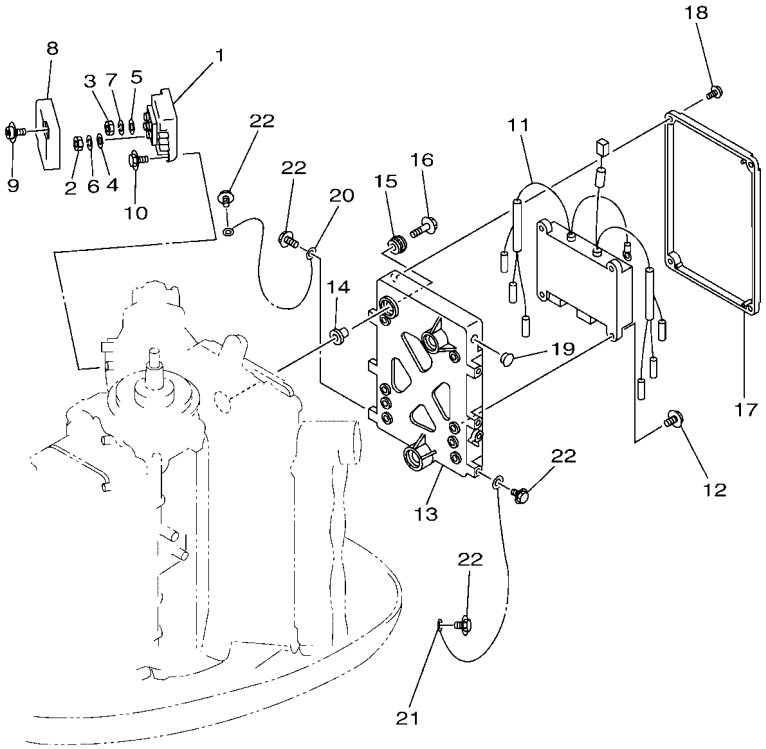

6G4J200-R110

REF. NO.	PART NO. CODIGO Nº	DESCRIPTION DESCRIPCION	6G4J	60HJ	6K0J	60JJ		REMARKS OBSERVACIONES
1	6G5–81960–A0	RECTIFIER & REGULATOR ASSY RECTIFICADOR Y REGULADOR	1	1	1	1		
2	95380–05600	NUT TUERCA	3	3	3	3		
3	95380–06600	NUT, HEXAGON TUERCA	1	1	1	1		
4	92990–05200	WASHER, PLAIN ARANDELA PLANA	3	3	3	3		
5	92990–06200	WASHER, PLAIN ARANDELA PLANA	1	1	1	1		
6	92903–05100	WASHER, SPRING RONDANA SENCILLA	3	3	3	3		
7	92903–06100	WASHER, SPRING RONDANA SENCILLA	1	1	1	1		
8	688–81961–01	COVER CUBIERTA	1	1	1	1		
9	97985–05225	SCREW, WITH WASHER TORNILLO, CON ARANDELA	2	2	2	2		
10	97513–06520	BOLT, WITH WASHER PERNO CON ARANDELA	2	2	2	2		
11	6G6–85540–00	C.D.I. UNIT ASSY UNIDAD C.D.I. COMPLETA	1	1	1	1		
12	97980–06220	SCREW, WITH WASHER TORNILLO, CON ARANDELA	4	4	4	4		
13	6R3–85542–03–1S	BRACKET SOPORTE	1	1	1	1		
14	90387–06M03	COLLAR ESPACIADOR	3	3	3	3		
15	90480–09M12	GROMMET TAPON	3	3	3	3		
16	90119–06M61	BOLT, WITH WASHER TORNILLO CON ARANDELA	3	3	3	3		
17	6R3–85537–00	COVER CUBIERTA	1	1	1	1		
18	90159–06M11	SCREW, WITH WASHER TORNILLO CON VALONA	4	4	4	4		
19	90480–12M25	GROMMET TAPON	1	1	1	1		
20	662–82519–00	WIRE, EARTH LEAD CABLE CONDUCTOR A TIERRA	1	1	1	1		
21	6R3–82519–00	WIRE, EARTH LEAD CABLE CONDUCTOR A TIERRA	1	1	1	1		
22	97595–06512	BOLT, WITH WASHER PERNO CON ARANDELA	4	4	4	4		

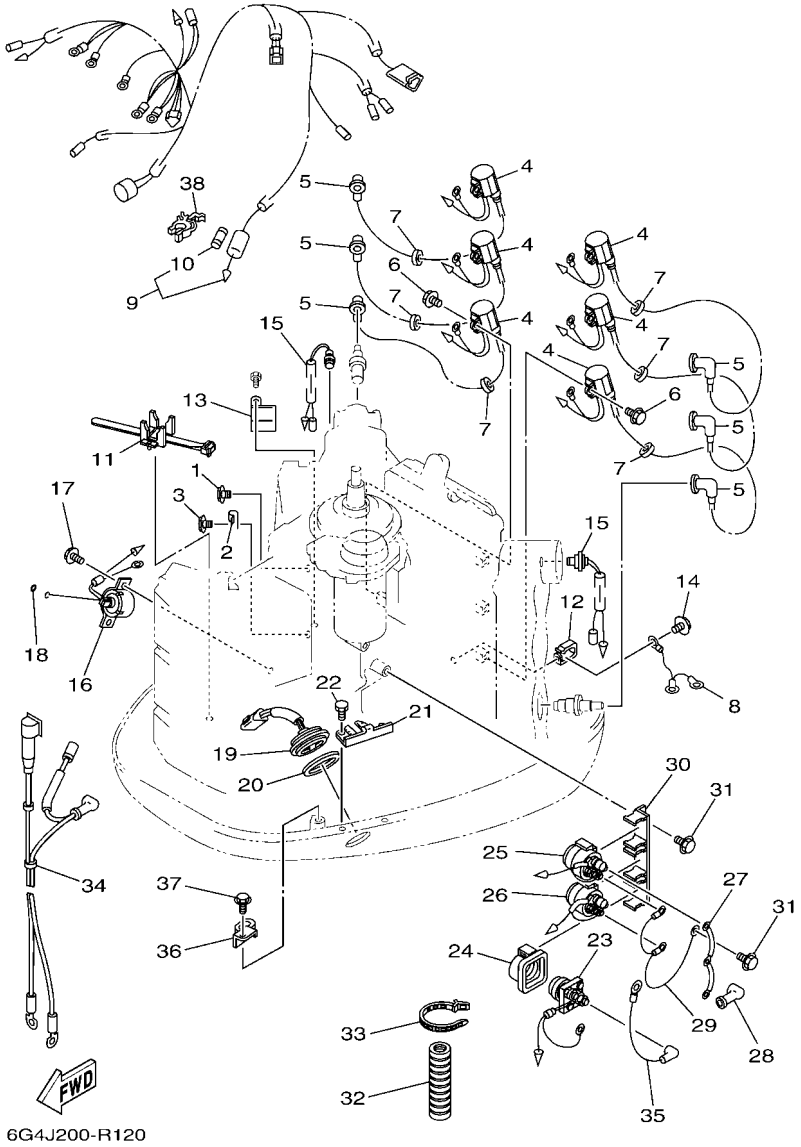

FIG. 12 ELECTRICAL 2 — EQUIPO ELECTRICO 2

REF. NO.	PART NO. CODIGO Nº	DESCRIPTION DESCRIPCION	6G4J	60HJ	6K0J	60JJ		REMARKS OBSERVACIONES
1	97595–06512	BOLT, WITH WASHER PERNO CON ARANDELA	1	1	1	1		
2	90465–06M88	CLAMP BRIDA	1	1	1	1		
3	97595–06512	BOLT, WITH WASHER PERNO CON ARANDELA	1	1	1	1		
4	6R3–85570–01	IGNITION COIL ASSY BOBINA DE IGNICION COMPLETO	6	6	6	6		
5	6E3–82370–21	PLUG CAP ASSY TAPON DE BUJIA COMPLT	6	6	6	6		
6	97595–06520	BOLT, WITH WASHER PERNO CON ARANDELA	6	6	6	6		
7	90480–25161	GROMMET TAPON	6	6	6	6		
8	6E5–82531–10	WIRE, LEAD CABLE CONDUCTOR	1	1	1	1		
9	60H–82590–00	WIRE HARNESS ASSY CONJUNTO DE CABLES	1	1	1	1		
10	663–82151–00	.FUSE (12V-20A) .FUSIBLE (12V-20A)	1	1	1	1		
11	688–82594–00	CLAMP GRAMPA	1	1	1	1		
12	90465–05M87	CLAMP BRIDA	1	1	1	1		
13	90465–08M89	CLAMP BRIDA	1	1	1	1		
14	97595–06512	BOLT, WITH WASHER PERNO CON ARANDELA	1	1	1	1		
15	688–82560–10	THERMO SWITCH ASSY INTER. DE TERMO	2	2	2	2		
16	64D–86110–01	SOLENOID SOLENOIDE	1	1	1	1		
17	97595–06516	BOLT, WITH WASHER PERNO CON ARANDELA	2	2	2	2		
18	93210–03261	O-RING ANILLO O	1	1	1	1		
19	61A–82563–01	TRIM & TILT SWITCH ASSY INTERRUPTOR DE INCLINACION	1	1	1	1		
20	6E5–82587–00	GASKET EMPAQUETADURA	1	1	1	1		
21	6R3–83614–00	BRACKET SOPORTE	1	1	1	1		
22	97095–06012	BOLT PERNO	2	2	2	2		
23	61A–81941–00	STARTER RELAY ASSY RELE DE ARRANQUE	1	1	1	1		
24	689–81952–10	HOLDER, RELAY SOSTEN DE RELE	1	1	1	1		
25	6E5–81950–00	RELAY ASSY RELE COMPLETO	1	1	1	1		
26	6E5–8195A–00	RELAY ASSY RELE COMPLETO	1	1	1	1		
27	6G5–87149–10	CONNECTOR CONECTOR	1	1	1	1		

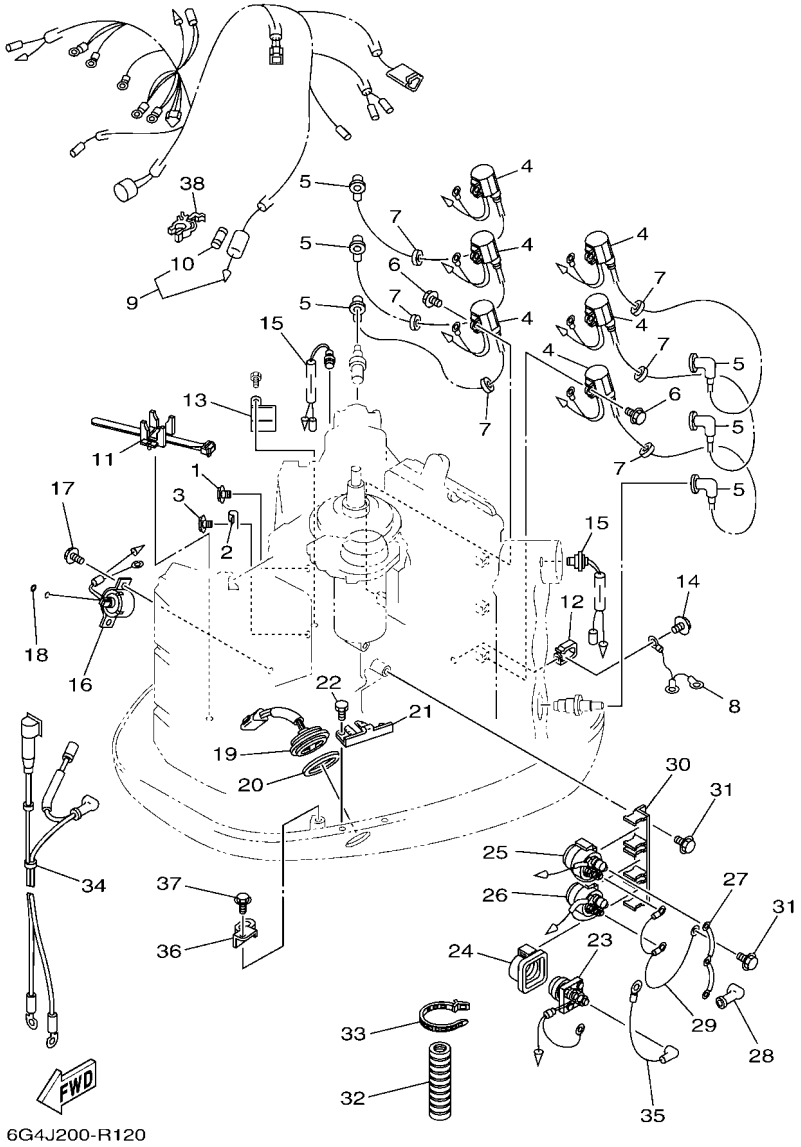

FIG. 12 ELECTRICAL 2 — EQUIPO ELECTRICO 2

REF. NO.	PART NO. CODIGO Nº	DESCRIPTION DESCRIPCION	6G4J	60HJ	6K0J	60JJ		REMARKS OBSERVACIONES
28	6G5–82119–00	COVER, LEAD WIRE CUBIERTA DE CABLE CONDUCTOR	2	2	2	2		
29	6E5–82116–00	WIRE, MINUS LEAD CABLE CONDUCTOR NEGATIVO	1	1	1	1		
30	6G5–81948–11	BRACKET SOPORTE	1	1	1	1		
31	97595–06516	BOLT, WITH WASHER PERNO CON ARANDELA	2	2	2	2		
32	6E9–83557–70	TUBE ENCHUFE DE ACEITE	1	1	1	1		
33	90465–13M18	CLAMP BRIDA	1	1	1	1		
34	6G5–82105–03	BATTERY CABLE CABLE DE BATERIA	1	1	1	1		
35	6E5–82117–01	WIRE, LEAD CABLE CONDUCTOR	1	1	1	1		
36	90465–12M25	CLAMP BRIDA	1	1	1	1		
37	97595–06512	BOLT, WITH WASHER PERNO CON ARANDELA	1	1	1	1		
38	6G5–82152–00	HOLDER, FUSE PORTA-FUSIBLES	1	1	1	1		

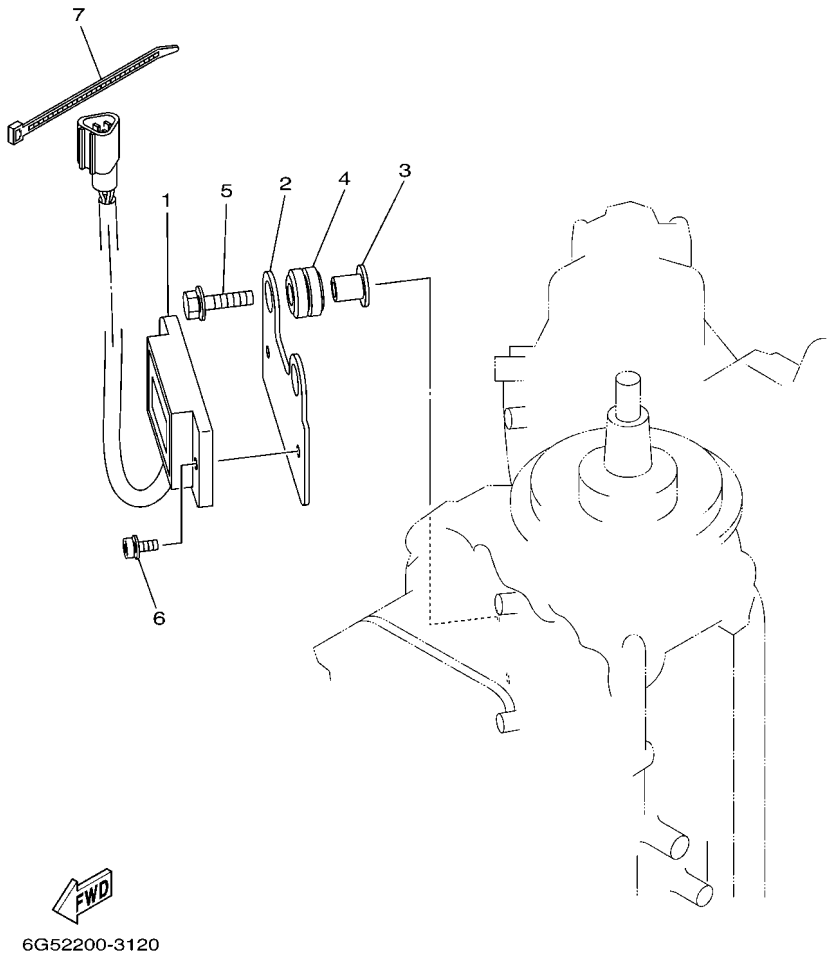

FIG. 13 ELECTRICAL 3 — EQUIPO ELECTRICO 3

REF. NO.	PART NO. CODIGO Nº	DESCRIPTION DESCRIPCION	6G4J	60HJ	6K0J	60JJ		REMARKS OBSERVACIONES
1	6Y5–83504–22	HOUR METER ASSY MEDIDOR DE HORAS COMPLETO	1	1	1	1		
2	60H–83519–00	BRACKET, METER SOPORTE DE MEDIDOR	1	1	1	1		
3	90387–06289	COLLAR ESPACIADOR	2	2	2	2		
4	90480–10M23	GROMMET TAPON	2	2	2	2		
5	90119–06M88	BOLT, WITH WASHER TORNILLO CON ARANDELA	2	2	2	2		
6	90159–05M26	SCREW, WITH WASHER TORNILLO CON VALONA	2	2	2	2		
7	90465–11M10	CLAMP BRIDA	1	1	1	1		

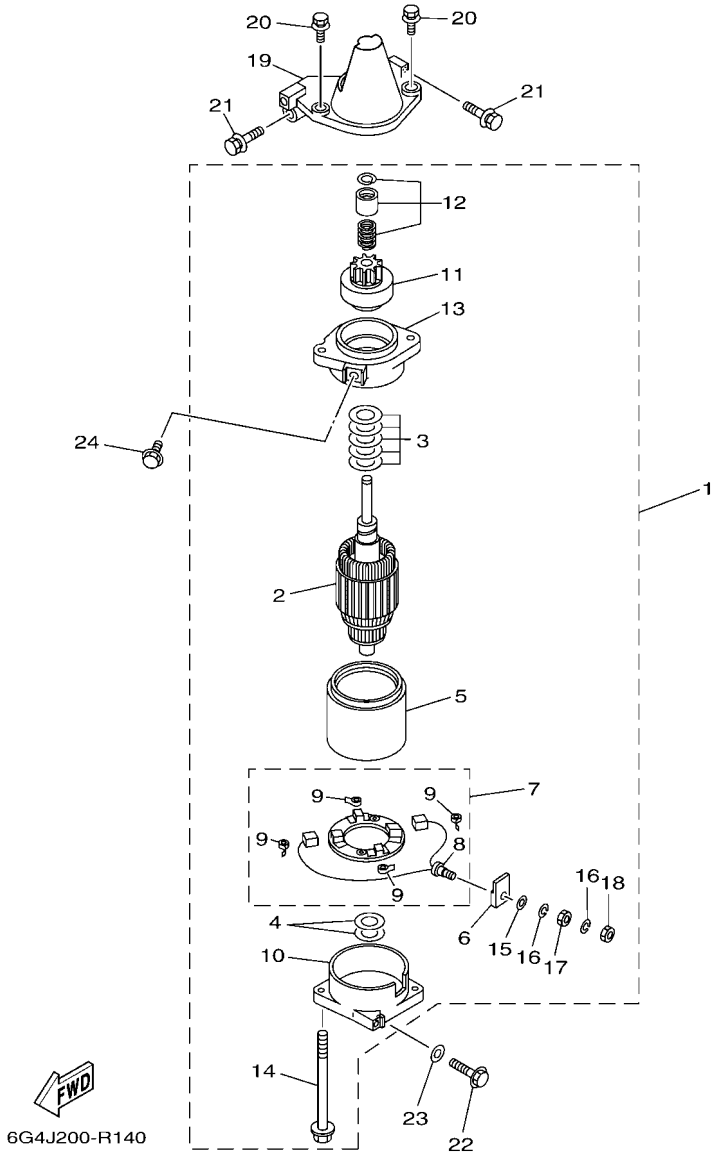

FIG. 14 STARTING MOTOR — MOTOR DE ARRANQUE

REF. NO.	PART NO. CODIGO Nº	DESCRIPTION DESCRIPCION	6G4J	60HJ	6K0J	60JJ		REMARKS OBSERVACIONES
1	6N7–81800–10	STARTING MOTOR ASSY MOTOR DE ARRANQUE COMPLETO	1	1	1	1		
2	6N7–81850–10	.ARMATURE ASSY .INDUCIDO COMPLETO	1	1	1	1		
3	61A–81809–00	.WASHER KIT .JUEGO DE ARANDELA	1	1	1	1		
4	61A–81824–00	.WASHER 2 .ARANDELA 2	2	2	2	2		
5	6N7–81810–00	.STATOR ASSY .ESTATOR COMPLETO	1	1	1	1		
6	6K7–8182G–10	.BUSH, TERMINAL .BUJE DE TERMINAL	1	1	1	1		
7	6N7–81840–00	.BRUSH HOLDER ASSY .SOSTEN DE ESCOBILLA COMPLETO	1	1	1	1		
8	6N7–81801–00	..BRUSH SET ..JUEGO DE ESCOBILLA	1	1	1	1		
9	6N7–81813–00	..SPRING, BRUSH ..RESORTE DE ESCOBILLA	4	4	4	4		
10	6N7–81820–10	.REAR BRACKET ASSY .CUBIERTA TRASERA COMPL	1	1	1	1		
11	6N7–81807–00	.GEAR ASSY, STARTING MOTOR .PINON CONJUNTO	1	1	1	1		
12	6N7–81857–00	.PINION STOPPER SET .JUEGO TAPON PINON	1	1	1	1		
13	6N7–81830–00	.FRONT BRACKET ASSY .SOPORTE DELANTERO COMPLETO	1	1	1	1		
14	6K7–81826–11	.BOLT .PERNO	2	2	2	2		
15	6E5–8182E–10	.WASHER .RONDANA	1	1	1	1		
16	6E5–8182F–10	.WASHER .RONDANA	2	2	2	2		
17	6E5–8182A–10	.NUT .TUERCA	1	1	1	1		
18	6E5–8182K–10	.NUT .TUERCA	1	1	1	1		
19	6E5–81822–02–98	BRACKET, STARTING MOTOR SOPORTE DE MOTOR DE ARRANQUE	1	1	1	1		
20	90119–08M76	BOLT, WITH WASHER TORNILLO CON ARANDELA	2	2	2	2		
21	90119–08M77	BOLT, WITH WASHER TORNILLO CON ARANDELA	2	2	2	2		
22	90119–08M57	BOLT, WITH WASHER TORNILLO CON ARANDELA	1	1	1	1		
23	92990–08600	WASHER, PLATE ARANDELA PLANA	1	1	1	1		
24	97595–08516	BOLT, WITH WASHER PERNO CON ARANDELA	1	1	1	1		

FIG. 15 BOTTOM COWLING — CUBIERTA INFERIOR

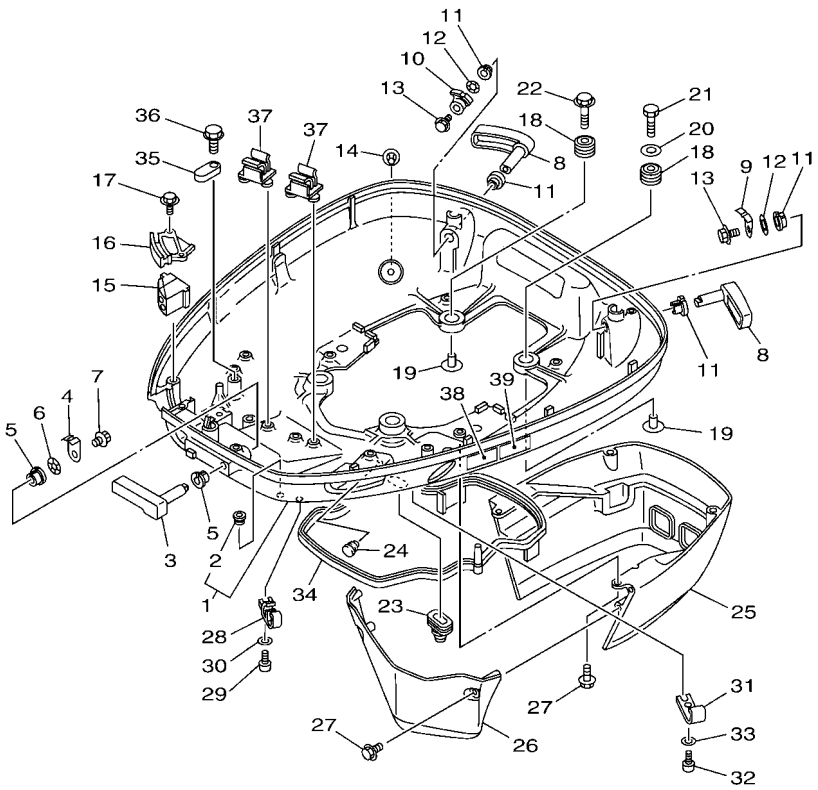

6G4J200-R150

REF. NO.	PART NO. CODIGO Nº	DESCRIPTION DESCRIPCION	6G4J	60HJ	6K0J	60JJ		REMARKS OBSERVACIONES
1	6E5–W4271–43–8D	COWLING, BOTTOM CUBIERTA INFERIOR	1	1	1	1		
2	6H4–42748–00	.GROMMET .TAPON	1	1	1	1		
3	688–42815–01–8D	LEVER, CLAMP 1 PALANCA ABRAZADERA 1	1	1	1	1		
4	688–42816–00	LEVER, CLAMP 2 PALANCA ABRAZADERA 2	1	1	1	1		
5	90386–13M38	BUSH BUJE	2	2	2	2		
6	90206–13M10	WASHER, WAVE ARANDELA ONDULADA	1	1	1	1		
7	90119–06M09	BOLT, WITH WASHER TORNILLO CON ARANDELA	1	1	1	1		
8	6E5–42817–01–8D	LEVER, CLAMP 3 PALANCA ABRAZADERA 3	2	2	2	2		
9	6G5–42816–00	LEVER, CLAMP 2 PALANCA ABRAZADERA 2	1	1	1	1		
10	6E5–42816–01	LEVER, CLAMP 2 PALANCA ABRAZADERA 2	1	1	1	1		
11	90386–13M38	BUSH BUJE	4	4	4	4		
12	90206–13M10	WASHER, WAVE ARANDELA ONDULADA	2	2	2	2		
13	90119–06M09	BOLT, WITH WASHER TORNILLO CON ARANDELA	2	2	2	2		
14	6E5–44391–00	NIPPLE, HOSE NIPLE MANGUERA	1	1	1	1		
15	6E5–42725–00	GROMMET TAPON	1	1	1	1		
16	6E5–42738–01–8D	PLATE, FITTING PLACA DE AJUSTE	1	1	1	1		
17	97595–06516	BOLT, WITH WASHER PERNO CON ARANDELA	2	2	2	2		
18	90480–22M15	GROMMET TAPON	4	4	4	4		
19	90387–08M37	COLLAR ESPACIADOR	4	4	4	4		
20	90201–08M54	WASHER, PLATE ARANDELA PLANA	1	1	1	1		
21	97075–08035	BOLT PERNO	1	1	1	1		
22	90119–08M22	BOLT, WITH WASHER TORNILLO CON ARANDELA	3	3	3	3		
23	688–42726–10	GROMMET TAPON	1	1	1	1		
24	90480–10M36	GROMMET TAPON	1	1	1	1		
25	6E5–42741–01–8D	APRON MANDIL	1	1	1	1		
26	6E5–42771–01–8D	APRON MANDIL	1	1	1	1		
27	97595–06520	BOLT, WITH WASHER PERNO CON ARANDELA	6	6	6	6		

FIG. 15 BOTTOM COWLING — CUBIERTA INFERIOR

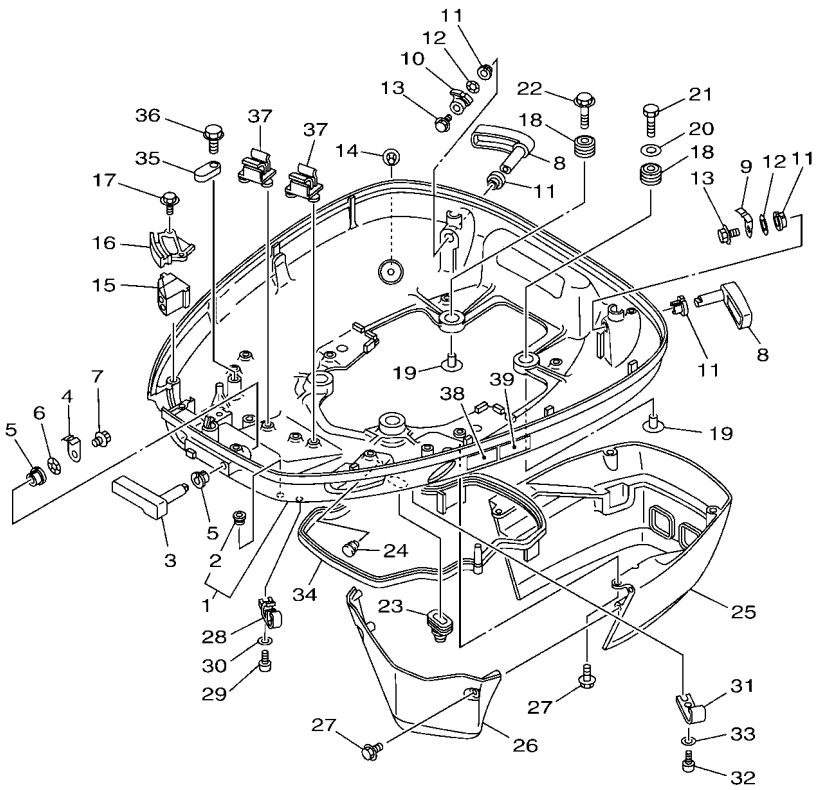

6G4J200-R150

REF. NO.	PART NO. CODIGO Nº	DESCRIPTION DESCRIPCION	6G4J	60HJ	6K0J	60JJ		REMARKS OBSERVACIONES
28	6E5–24367–01	CLAMP, FUEL PIPE 2 GRAMPA DE TUBO DE COMBUST.2	2	2	2	2		
29	90157–06M01	SCREW, PAN HEAD TORNILLO CABEZA CONICA PLANA	2	2	2	2		
30	92990–06600	WASHER, PLATE ARANDELA PLANA	2	2	2	2		
31	6E5–24367–10	CLAMP, FUEL PIPE 2 GRAMPA DE TUBO DE COMBUST.2	1	1	1	1		
32	90157–06M01	SCREW, PAN HEAD TORNILLO CABEZA CONICA PLANA	1	1	1	1		
33	92990–06600	WASHER, PLATE ARANDELA PLANA	1	1	1	1		
34	6E5–42716–10	RUBBER SEAL 1 SELLO DE GOMA 1	1	1	1	1		
35	6E5–82588–00	PLATE PLACA	1	1	1	1		
36	97595–06520	BOLT, WITH WASHER PERNO CON ARANDELA	1	1	1	1		
37	6E5–82594–00	CLAMP GRAMPA	2	2	2	2		
38	6EE–42794–40	LABEL, WARNING (GENERAL) ETIQUETA DE PRECAUCION	1	1	1	1		
39	6EE–42794–50	LABEL, WARNING (GENERAL) ETIQUETA DE PRECAUCION	1	1		1		FOR CAR(CE) FOR CAR(CE)

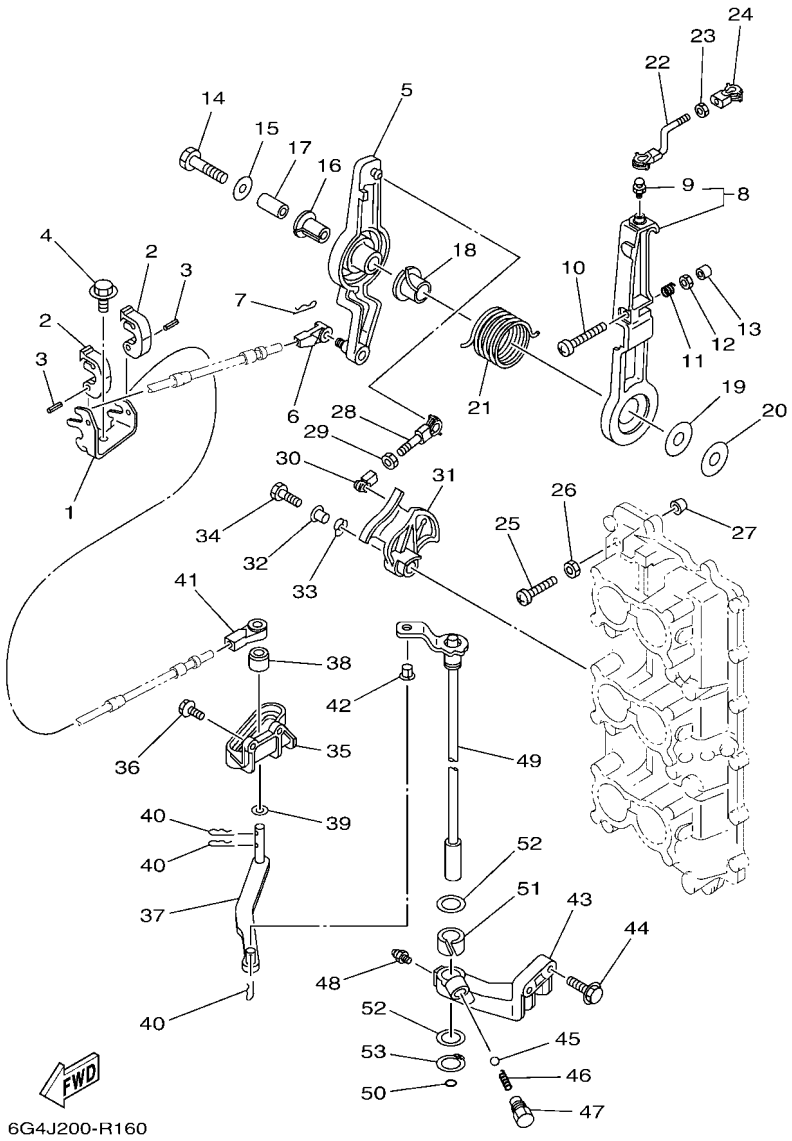

FIG. 16 CONTROL

CONTROL

REF. NO.	PART NO. CODIGO Nº	DESCRIPTION DESCRIPCION	6G4J	60HJ	6K0J	60JJ		REMARKS OBSERVACIONES
1	6E5–48531–00	BRACKET, REMOTE CONTROL 1 SOPORTE DE CONTROL REMOTO	1	1	1	1		
2	6E5–48538–00	CLAMP, CABLE GRAMPA DE CABLE	2	2	2	2		
3	91690–30012	PIN, SPRING PASADOR DE RESORTE	2	2	2	2		
4	97595–08520	BOLT, WITH WASHER PERNO CON ARANDELA	1	1	1	1		
5	61H–41632–02–1S	LEVER, MAGNETO CONTROL PALANCA DE CONTROL DE MAGNETO	1	1	1	1		
6	6E5–48344–00	CABLE END, REMOTE CONTROL BASE CONTROL	1	1	1	1		
7	90468–18008	CLIP PRESILLA	1	1	1	1		
8	6G5–41631–01–1S	LEVER, MAGNETO CONTROL PALANCA DE CONTROL DE MAGNETO	1	1	1	1		
9	663–85518–00	.JOINT, BALL .CONECTOR	1	1	1	1		
10	90157–06013	SCREW, PAN HEAD TORNILLO CABEZA CONICA PLANA	1	1	1	1		
11	90501–16M12	SPRING, COMPRESSION RESORTE DE COMPRESION	1	1	1	1		
12	95303–06600	NUT TUERCA	1	1	1	1		
13	688–44194–00	CAP TAPA	1	1	1	1		
14	97013–08045	BOLT PERNO	1	1	1	1		
15	90201–08M23	WASHER, PLATE ARANDELA PLANA	1	1	1	1		
16	90386–12089	BUSH BUJE	1	1	1	1		
17	90387–08M16	COLLAR ESPACIADOR	1	1	1	1		
18	90386–22M13	BUSH BUJE	1	1	1	1		
19	90202–12092	WASHER, PLATE ARANDELA DE PLANA	1	1	1	1		
20	90201–08M13	WASHER, PLATE ARANDELA PLANA	1	1	1	1		
21	90508–29M12	SPRING, TORSION RESORTE DE TORSION	1	1	1	1		
22	6G5–41636–01	ROD, MAGNETO CONTROL VARILLA DE CONTROL MAGNETO	1	1	1	1		
23	95380–05600	NUT TUERCA	1	1	1	1		
24	662–41237–01	JOINT, LINK CONECTOR	1	1	1	1		
25	90157–06M00	SCREW, PAN HEAD TORNILLO CABEZA CONICA PLANA	1	1	1	1		
26	95303–06600	NUT TUERCA	1	1	1	1		
27	688–44194–00	CAP TAPA	1	1	1	1		

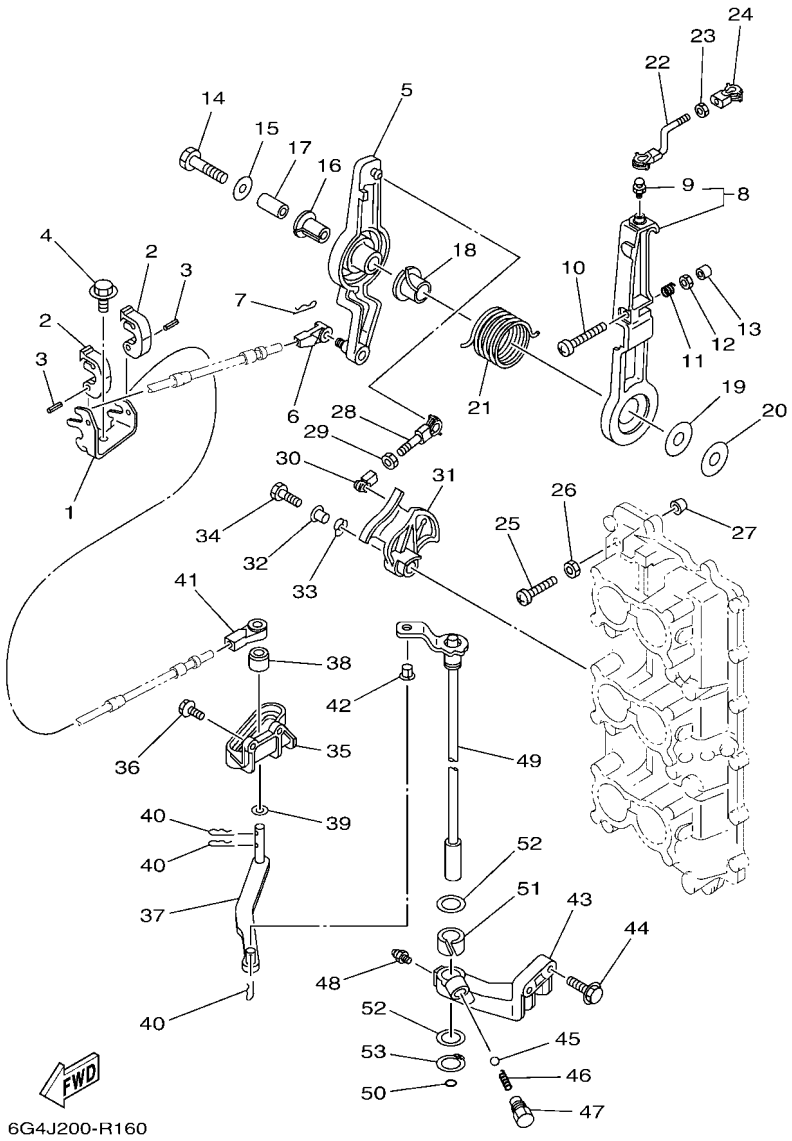

FIG. 16 CONTROL

REF. NO.	PART NO. CODIGO Nº	DESCRIPTION DESCRIPCION	6G4J	60HJ	6K0J	60JJ		REMARKS OBSERVACIONES
28	6G5–41211–01	LINK, ACCEL. ESLABON, ACELERADOR	1	1	1	1		
29	95380–05600	NUT TUERCA	1	1	1	1		
30	662–41237–01	JOINT, LINK CONECTOR	1	1	1	1		
31	6G5–41213–10	CAM, ACCEL. LEVA ACELERADOR	1	1	1	1		
32	90387–06M29	COLLAR ESPACIADOR	1	1	1	1		
33	90206–10M04	WASHER, WAVE ARANDELA ONDULADA	1	1	1	1		
34	97095–06025	BOLT PERNO	1	1	1	1		
35	6E5–44117–00–94	BRACKET SOPORTE	1	1	1	1		
36	90119–06MA2	BOLT, WITH WASHER TORNILLO CON ARANDELA	2	2	2	2		
37	68F–44121–00	LEVER, SHIFT ROD PALANCA VARILLA CAMBIOS	1	1	1	1		
38	6E5–44122–00	BUSHING, SHIFT ROD LEVER BUJE PALANCA VARILLA DE CAMBIO	1	1	1	1		
39	90202–08M20	WASHER, PLATE ARANDELA DE PLANA	1	1	1	1		
40	90468–18008	CLIP PRESILLA	3	3	3	3		
41	6E5–48344–00	CABLE END, REMOTE CONTROL BASE CONTROL	1	1	1	1		
42	90386–06M12	BUSH BUJE	1	1	1	1		
43	6E5–44118–01–94	BRACKET SOPORTE	1	1	1	1		
44	97513–08530	BOLT, WITH WASHER PERNO CON ARANDELA	2	2	2	2		
45	93501–04M02	BALL BOLA	1	1	1	1		
46	90501–12082	SPRING, COMPRESSION RESORTE DE COMPRESION	1	1	1	1		
47	648–42715–00	BUSHING BUJE	1	1	1	1		
48	93700–06M03	NIPPLE, GREASE BOQUILLA DE ENGRASAR	1	1	1	1		
49	6E5–44120–04	HANDLE GEAR SHIFT ASSY MANIJA DE CAMBIO COMPL	1	1				L(20.3") L(20.3")
	6E5–44120–24	HANDLE GEAR SHIFT ASSY MANIJA DE CAMBIO COMPL	1	1	1	1		X(25.3") X(25.3")
50	93210–09165	O-RING ANILLO O	1	1	1	1		
51	90386–16M66	BUSH BUJE	1	1	1	1		
52	90202–16061	WASHER, PLATE ARANDELA DE PLANA	2	2	2	2		
53	93410–16006	CIRCLIP SEGURO	1	1	1	1		

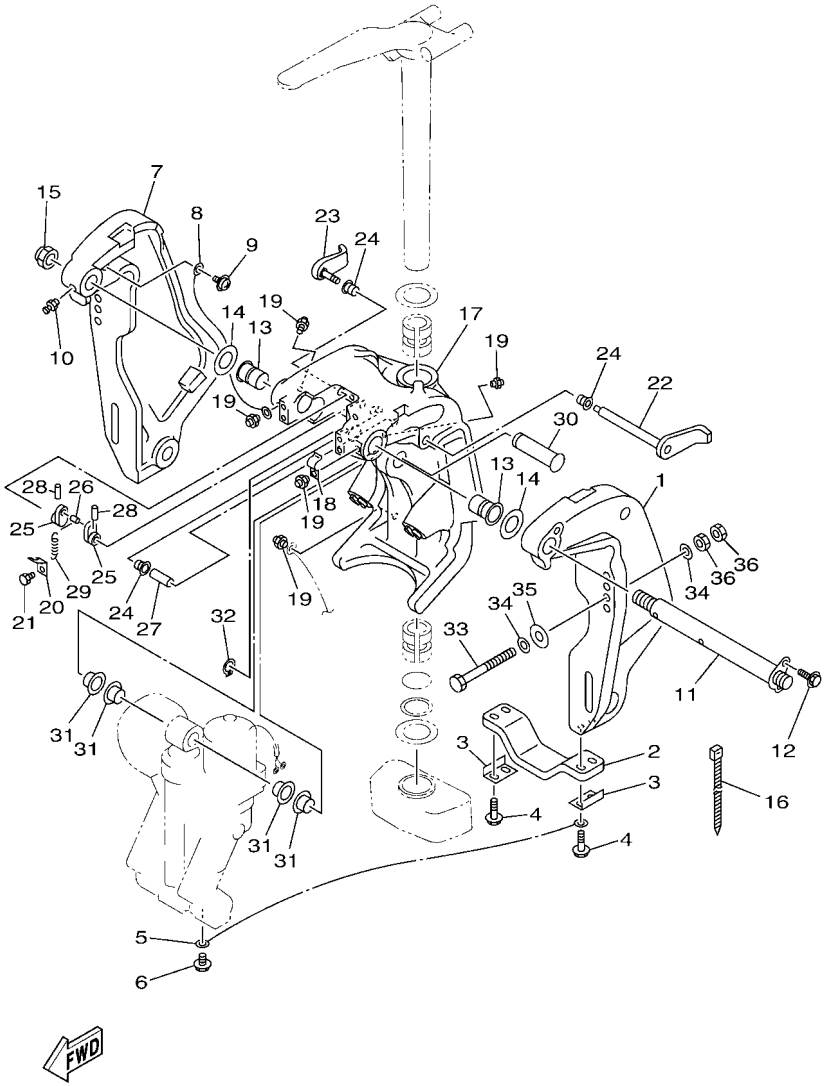

6G4J200-R170

FIG. 17 BRACKET 1 — SOPORTE 1

REF. NO.	PART NO. CODIGO Nº	DESCRIPTION DESCRIPCION	6G4J	60HJ	6K0J	60JJ		REMARKS OBSERVACIONES
1	64E–43111–02–8D	BRACKET, CLAMP 1 SOPORTE DE LA ABRAZADERA 1	1	1	1	1		
2	6G5–45251–02	ANODE CATODE	1	1	1	1		
3	6G5–44526–00	PLATE PLACA 1	2	2	2	2		
4	97595–06530	BOLT, WITH WASHER PERNO CON ARANDELA	4	4	4	4		
5	6E5–82148–00	WIRE, LEAD 4 CABLE CONDUCTOR 4	1	1	1	1		
6	97595–06510	BOLT, WITH WASHER PERNO CON ARANDELA	1	1	1	1		
7	64E–43112–02–8D	BRACKET, CLAMP 2 SOPORTE DE LA ABRAZADERA 2	1	1	1	1		
8	6E5–82148–00	WIRE, LEAD 4 CABLE CONDUCTOR 4	1	1	1	1		
9	97985–06212	SCREW, WITH WASHER TORNILLO, CON ARANDELA	1	1	1	1		
10	93700–06M03	NIPPLE, GREASE BOQUILLA DE ENGRASAR	1	1	1	1		
11	64E–43131–01	BOLT, CLAMP BRACKET TORNILLO DE ABRAZADERA DEL SOP	1	1	1	1		
12	97595–08520	BOLT, WITH WASHER PERNO CON ARANDELA	1	1	1	1		
13	90386–25M31	BUSH BUJE	2	2	2	2		
14	90201–26M59	WASHER, PLATE ARANDELA PLANA	2	2	2	2		
15	90185–22M11	NUT, SELF-LOCKING TUERCA AUTOBLOCANTE	1	1	1	1		
16	90465–11M10	CLAMP BRIDA	1	1	1	1		
17	64E–43311–10–8D	BRACKET, SWIVEL 1 SOPORTE GIRATORIO 1	1	1				L(20.3") L(20.3")
	64E–43311–20–8D	BRACKET, SWIVEL 1 SOPORTE GIRATORIO 1	1	1	1	1		X(25.3") X(25.3")
18	90465–08M63	CLAMP BRIDA	1	1	1	1		
19	93700–06M03	NIPPLE, GREASE BOQUILLA DE ENGRASAR	5	5	5	5		
20	6G5–43144–00	HOOK, SPRING GANCHO	1	1	1	1		
21	97095–06010	BOLT PERNO	1	1	1	1		
22	6G5–43181–02	LEVER, TILT STOP 1 PALANCA TOPE INCLINACION 1	1	1	1	1		
23	6G5–43185–02	LEVER, TILT STOP 2 PALANCA TOPE INCLINACION 2	1	1	1	1		
24	90386–10M16	BUSH BUJE	3	3	3	3		
25	6G5–43148–00	COLLAR, DISTANCE COLLAR	2	2	2	2		
26	90249–06M19	PIN PASADOR	1	1	1	1		

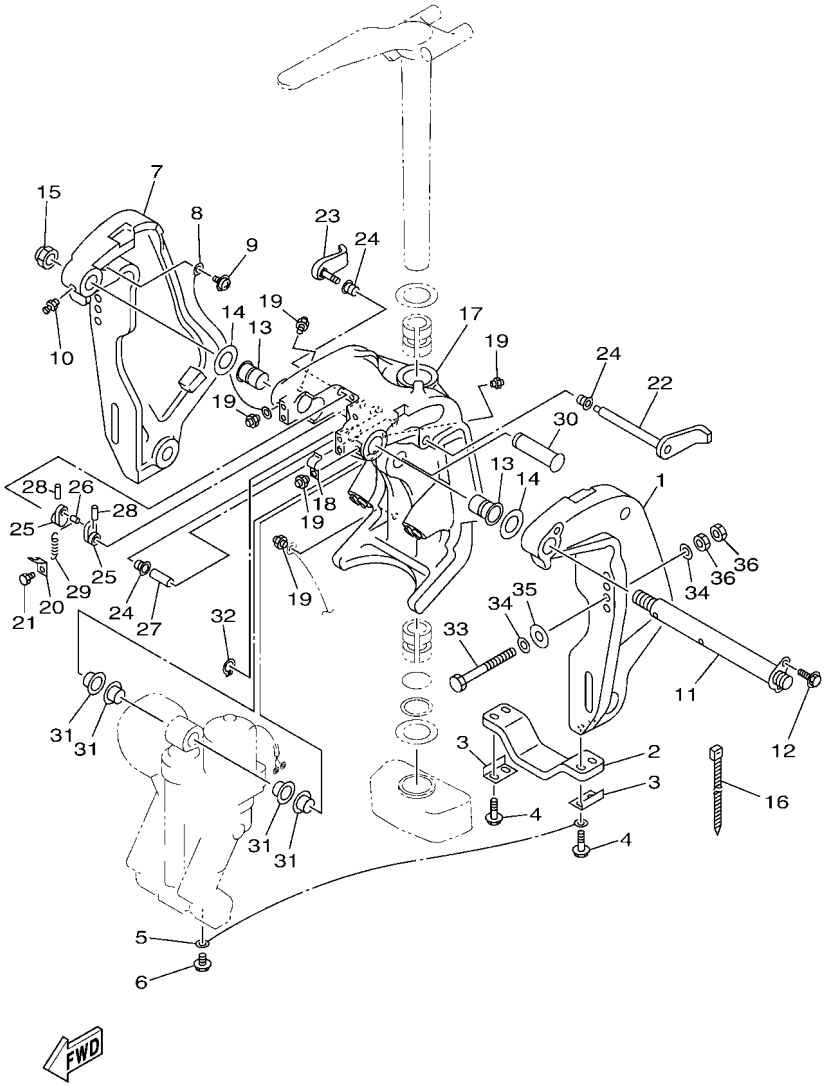

6G4J200-R170

FIG. 17 BRACKET 1 — SOPORTE 1

REF. NO.	PART NO. CODIGO Nº	DESCRIPTION DESCRIPCION	6G4J	60HJ	6K0J	60JJ		REMARKS OBSERVACIONES
27	90387–10M05	COLLAR ESPACIADOR	1	1	1	1		
28	91690–30020	PIN, SPRING PASADOR DE RESORTE	2	2	2	2		
29	90506–14M24	SPRING, TENSION RESORTE DE TENSION	1	1	1	1		
30	64E–43126–00	PIN, UPPER SHOCK MOUNT PASADOR DE AMORTIGUADOR SUPERI	1	1	1	1		
31	90386–22M98	BUSH BUJE	4	4	4	4		
32	93410–22M11	CIRCLIP SEGURO	1	1	1	1		
33	90101–12M03	BOLT (L:115MM) TORNILLO (L:115MM)	4	4	4	4		
34	90201–13M01	WASHER, PLATE ARANDELA PLANA	8	8	8	8		
35	90201–12426	WASHER, PLATE ARANDELA PLANA	4	4	4	4		
36	95380–12600	NUT TUERCA	8	8	8	8		

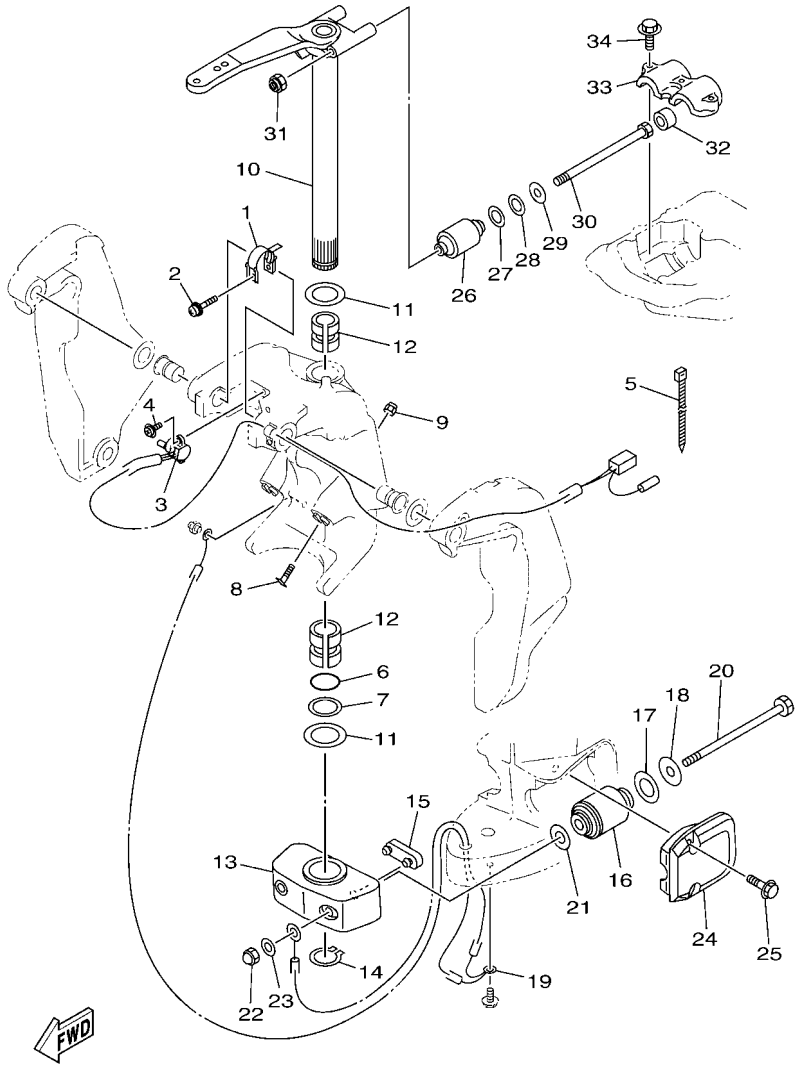

6G4J200-R180

FIG. 18 BRACKET 2 — SOPORTE 2

REF. NO.	PART NO. CODIGO Nº	DESCRIPTION DESCRIPCION	6G4J	60HJ	6K0J	60JJ		REMARKS OBSERVACIONES
1	64E–43139–10	CAM, TRIM SENDER LEVA TRANSMISOR DE INCLINDOR	1	1	1	1		
2	90159–05059	SCREW, WITH WASHER TORNILLO CON VALONA	1	1	1	1		
3	64E–83672–03	TRIM SENDER TRANSMISOR DE INCLINADOR	1	1	1	1		
4	97985–06216	SCREW, WITH WASHER TORNILLO, CON ARANDELA	2	2	2	2		
5	90465–11M10	CLAMP BRIDA	3	3	3	3		
6	93210–37MH7	O-RING ANILLO O	1	1	1	1		
7	90202–40M47	WASHER, PLATE ARANDELA DE PLANA	1	1	1	1		
8	61A–43376–00	BOLT, THRUST RECEIVER TORNILLO RECEPTOR	2	2	2	2		
9	95780–10300	NUT, FLANGE TUERCA	2	2	2	2		
10	6E5–42510–05–8D	STEERING BRACKET ASSY SOPORTE DIRECCION COMPL.	1	1				L(20.3") L(20.3")
	6E5–42510–25–8D	STEERING BRACKET ASSY SOPORTE DIRECCION COMPL.	1	1	1	1		X(25.3") X(25.3")
11	90201–38M60	WASHER, PLATE ARANDELA PLANA	2	2	2	2		
12	90386–38M32	BUSH BUJE	2	2	2	2		
13	6G5–44551–01–8D	HOUSING, LOWER MOUNT RUBBER 1 CAJA AMORTIGUADOR INFERIOR HU	1	1	1	1		
14	93410–37M04	CIRCLIP SEGURO	1	1	1	1		
15	6E5–44575–00	DAMPER, LOWER MOUNT RUBBER AMORTIGUADOR INFERIOR	1	1	1	1		
16	6J9–44555–00	MOUNT DAMPER, LOWER SIDE AMORTIGUADOR DE HULE LADO INFE	2	2	2	2		
17	90202–32M19	WASHER, PLATE ARANDELA DE PLANA	2	2	2	2		
18	90201–16M55	WASHER, PLATE ARANDELA PLANA	2	2	2	2		
19	66K–82149–00	WIRE, LEAD 3 CABLE CONDUCTOR 3	1	1				L(20.3") L(20.3")
	68V–82149–30	WIRE, LEAD 3 CABLE CONDUCTOR 3	1	1	1	1		X(25.3") X(25.3")
20	90109–14M34	BOLT PERNO	2	2	2	2		
21	90201–15M58	WASHER, PLATE ARANDELA PLANA	2	2	2	2		
22	95380–14800	NUT TUERCA	2	2	2	2		
23	92995–14600	WASHER ARANDELA	2	2	2	2		
24	60H–44552–00–8D	HOUSING, LOWER MOUNT RUBBER 2 CAJA AMORTIGUADOR INFERIOR HU	2	2	2	2		
25	97595–10555	BOLT, WITH WASHER PERNO CON ARANDELA	4	4	4	4		

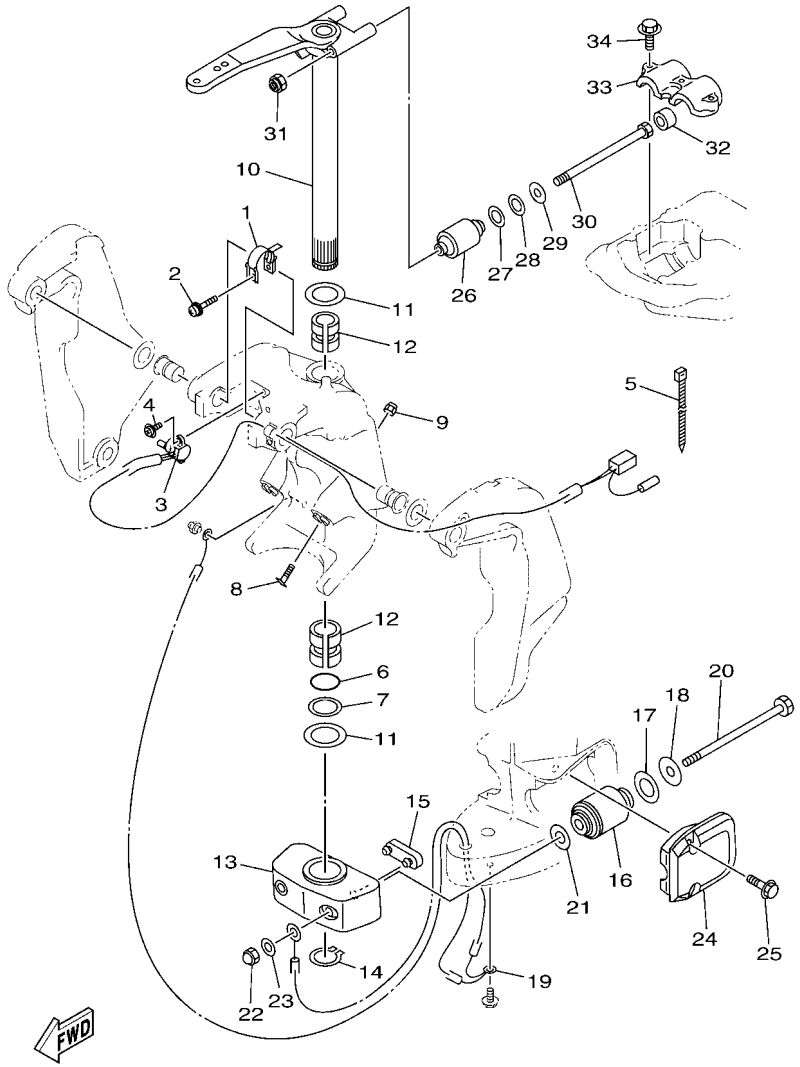

6G4J200-R180

FIG. 18 BRACKET 2 — SOPORTE 2

REF. NO.	PART NO. CODIGO Nº	DESCRIPTION DESCRIPCION	6G4J	60HJ	6K0J	60JJ		REMARKS OBSERVACIONES
26	6J9–44514–00	MOUNT DAMPER, UPPER SIDE AMORTIGUADOR LADO SUPERIOR	2	2	2	2		
27	90201–26M57	WASHER, PLATE ARANDELA PLANA	2	2	2	2		
28	90202–26M18	WASHER, PLATE ARANDELA DE PLANA	2	2	2	2		
29	90201–14M56	WASHER, PLATE ARANDELA PLANA	2	2	2	2		
30	90109–12007	BOLT PERNO	2	2	2	2		
31	90185–12M12	NUT, SELF-LOCKING TUERCA AUTOBLOCANTE	2	2	2	2		
32	663–44575–00	DAMPER, LOWER MOUNT RUBBER AMORTIGUADOR INFERIOR	2	2	2	2		
33	6E5–44511–00	COVER, UPPER MOUNT CUBIERTA AMORTIGUADOR SUPERIOR	1	1	1	1		
34	97595–10545	BOLT, WITH WASHER PERNO CON ARANDELA	3	3	3	3		

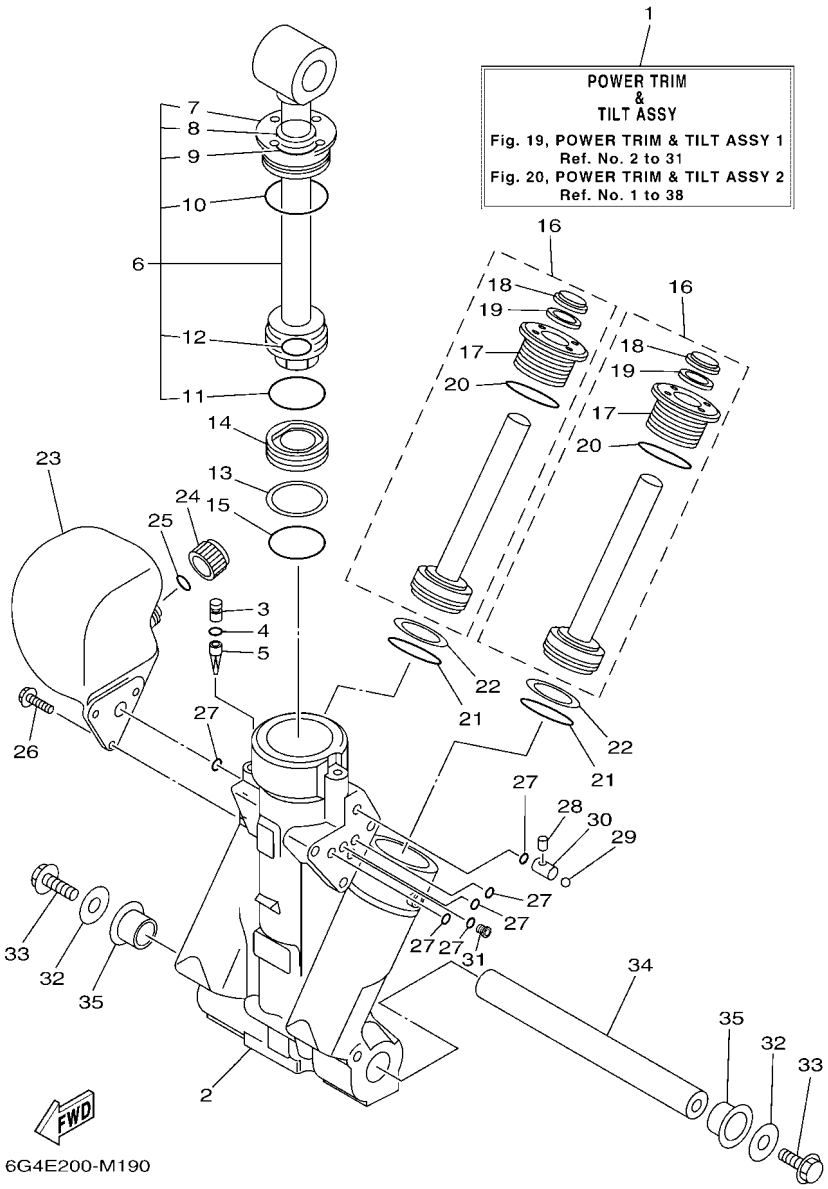

FIG. 19 POWER TRIM & TILT ASSY 1 — COMPONER Y PODER VARILLA 1

REF. NO.	PART NO. CODIGO Nº	DESCRIPTION DESCRIPCION	6G4J	60HJ	6K0J	60JJ		REMARKS OBSERVACIONES
1	64E–43800–0A	POWER TRIM & TILT ASSY ELEVADOR HIDRAULICO COMPL.	1	1	1	1		
2	64E–43825–03	HOUSING, TRIM & TILT CAJA INCLINACION Y ADRNO	1	1	1	1		
3	6AW–4388J–00	PLUG 2 TAPON 2	1	1	1	1		
4	93210–10M74	O-RING ANILLO O	1	1	1	1		
5	64E–43817–00	FILTER 2 FIELTRO 2	1	1	1	1		
6	64E–43810–02	TILT PISTON SUB ASSY ELEVADOR SUB-PISTON COMPL.	1	1	1	1		
7	64E–43811–02	.SCREW, CYLINDER END .TORNILLO CILINDRO EXTREMO	1	1	1	1		
8	64E–43898–00	.SEAL, DUST 2 .SELLO ANTIPOLVO	1	1	1	1		
9	64E–43867–00	.O-RING .ANILLO EN O 7	1	1	1	1		
10	64E–43866–00	.O-RING .ANILLO EN O 6	1	1	1	1		
11	6E5–43862–00	.O-RING .ANILLO EN O 2	1	1	1	1		
12	64E–43883–00	.O-RING .ANILLO EN O 10	1	1	1	1		
13	6E5–43872–00	RING, BACK UP ANILLO	1	1	1	1		
14	6E5–43814–02	PISTON, FREE PISTON LIBRE	1	1	1	1		
15	6E5–43862–00	O-RING ANILLO EN O 2	1	1	1	1		
16	64E–43820–05	TRIM PISTON SUB ASSY ELEVADOR PISTON COMPL.	2	2	2	2		
17	64E–43821–05	.SCREW, TRIM CYLINDER END .TORNILLO CILINDURO EXTREMO	1	1	1	1		
18	64E–43822–00	.SEAL, TRIM DUST .SELLO DE POLVO	1	1	1	1		
19	64E–4384J–00	.SEAL, TRIM DOWN .SELLO	1	1	1	1		
20	6G5–43864–00	.O-RING .ANILLO EN O 4	1	1	1	1		
21	6E5–43864–00	O-RING ANILLO EN O 4	2	2	2	2		
22	6E5–43874–01	RING, BACK UP ANILLO	2	2	2	2		
23	64E–43828–01	BODY, RESERVOIR CUERPO DEPOSITO	1	1	1	1		
24	64E–43829–01	PLUG, RESERVOIR TAPON DEPOSITO	1	1	1	1		
25	64E–43897–00	O-RING ANILLO EN O	1	1	1	1		
26	64E–4388E–01	BOLT ,SCREW (L:14MM) PERNO (L:14MM)	3	3	3	3		
27	64E–43869–00	O-RING ANILLO EN O 9	6	6	6	6		

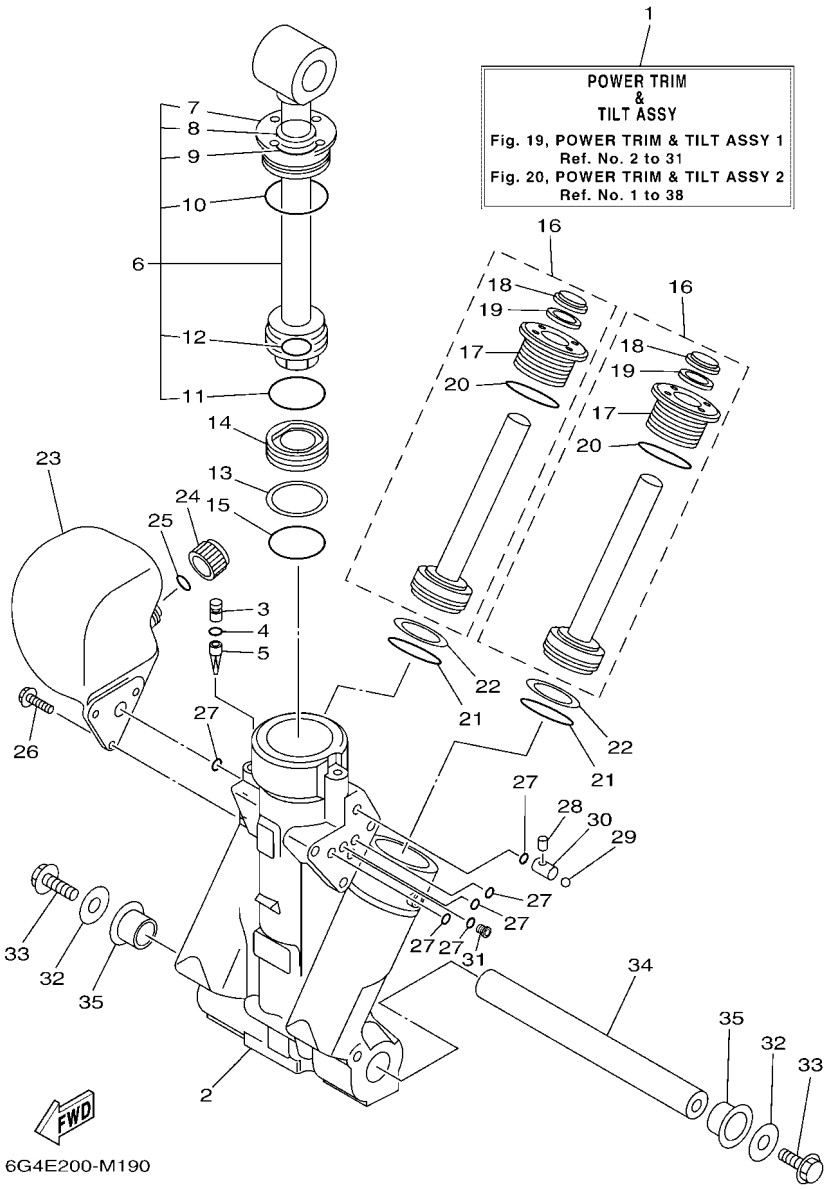

FIG. 19 POWER TRIM & TILT ASSY 1 — COMPONER Y PODER VARILLA 1

REF. NO.	PART NO. CODIGO Nº	DESCRIPTION DESCRIPCION	6G4J	60HJ	6K0J	60JJ		REMARKS OBSERVACIONES
28	64E–4381G–00	PIN PASADOR 1	1	1	1	1		
29	6E5–43858–00	BALL ESFERA	1	1	1	1		
30	64E–4382G–00	VALVE, SEAT JUEGO ASIENTO VALVULA	1	1	1	1		
31	64E–4384N–00	PLUG, ORIFICE TAPON DE ORIFICIO	1	1	1	1		
32	90201–10060	WASHER, PLATE ARANDELA PLANA	2	2	2	2		
33	90119–10054	BOLT, WITH WASHER TORNILLO CON ARANDELA	2	2	2	2		
34	6BC–43818–00	PIN, LOWER SHOCK MOUNT PASADOR AMORTIGUADOR INFERIOR	1	1	1	1		
35	90386–22M98	BUSH BUJE	2	2	2	2		

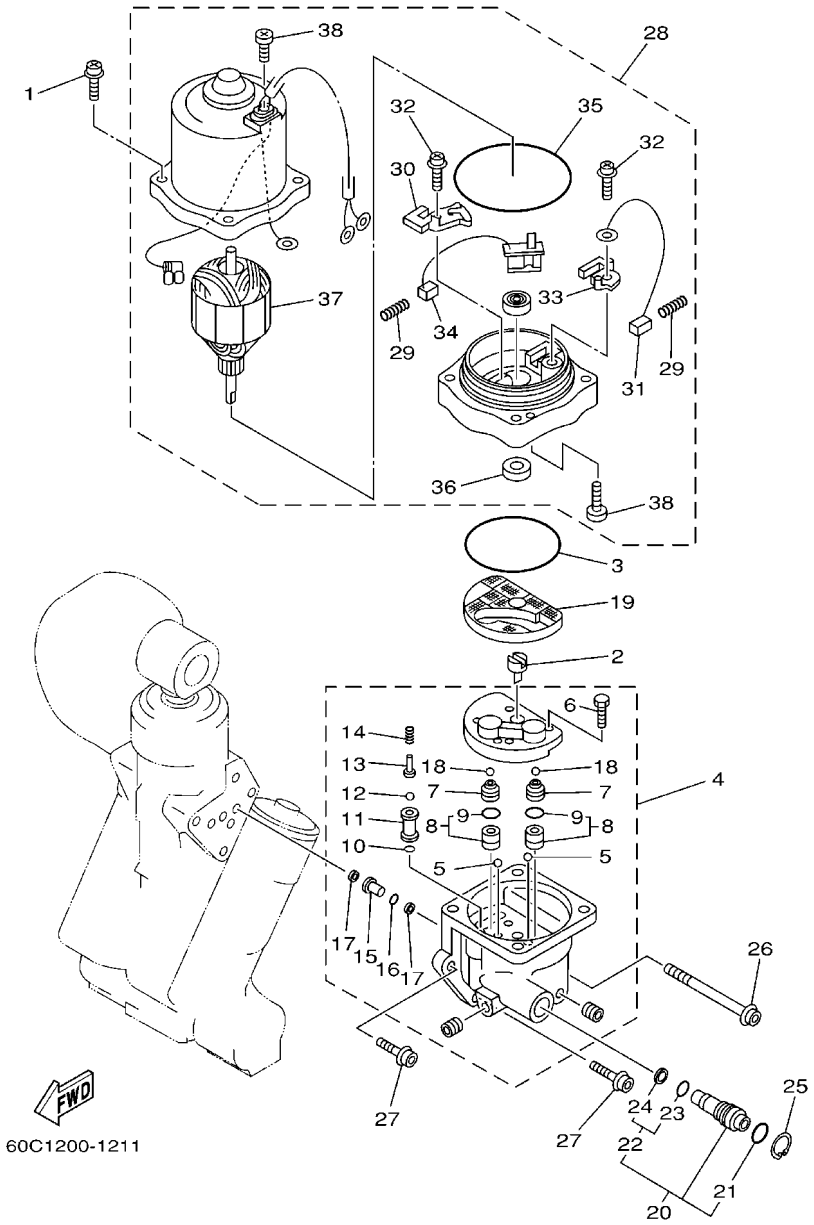

FIG. 20 POWER TRIM & TILT ASSY 2 — COMPONER Y PODER VARILLA 2

REF. NO.	PART NO. CODIGO Nº	DESCRIPTION DESCRIPCION	6G4J	60HJ	6K0J	60JJ		REMARKS OBSERVACIONES
1	64E–4388E–11	BOLT ,SCREW (L:34.7MM) PERNO (L:34.7MM)	4	4	4	4		
2	64E–43831–00	CONNECTOR, SHAFT CONEXION EJE	1	1	1	1		
3	64E–43868–00	O-RING ANILLO EN O 8	1	1	1	1		
4	64E–43830–01	GEAR PUMP ASSY ENGRANAJE BOMBA COMPL.	1	1	1	1		
5	72X–43858–00	.BALL .ESFERA	2	2	2	2		
6	64E–43843–00	.SCREW, VALVE LOCK .TORNILLO	4	4	4	4		
7	6AW–43841–00	.PISTON, SHUTTLE .PISTON	2	2	2	2		
8	64E–43802–00	.VALVE SUB ASSY .VALVULA PRINCIPAL COMPL.	2	2	2	2		
9	6E5–43896–00	..O-RING ..ANILLO EN O	1	1	1	1		
10	6G5–43863–00	.O-RING .ANILLO EN O 3	1	1	1	1		
11	64E–43851–00	.SEAT, RELIEF VALVE .ASIENTO VALVULA DE DESCARGA	1	1	1	1		
12	64E–43858–00	.BALL .ESFERA	1	1	1	1		
13	64E–43859–00	.PIN, VALVE SUPPORT .PASADOR VALVULA SOPORTE	1	1	1	1		
14	64E–43855–00	.SPRING, UP RELIEF .RESORTE SEGURIDAD SUPERIOR	1	1	1	1		
15	64E–43850–00	.VALVE SUB ASSY .VALVULA COMPL	1	1	1	1		
16	64E–43865–00	.O-RING .ANILLO EN O 5	1	1	1	1		
17	64E–43816–00	.FILTER 1 .FIELTRO 1	2	2	2	2		
18	6AW–43858–00	.BALL .ESFERA	2	2	2	2		
19	64E–43817–11	FILTER 2 FIELTRO 2	1	1	1	1		
20	64E–43860–01	MANUAL VALVE SUB-ASSY VALVULA SUB-COMPL.	1	1	1	1		
21	72X–85075–L0	.O-RING .ANILLO EN O 5	1	1	1	1		
22	64E–43827–00	.RING SET .ESFERA	1	1	1	1		
23	64E–4387A–00	..O-RING ..ANILLO O	1	1	1	1		
24	64E–43873–00	..RING, BACK UP ..ANILLO	1	1	1	1		
25	6AW–43875–00	RING, SNAP ANILLO	1	1	1	1		
26	64E–43879–11	SCREW, WITH WASHER TORNILLO CON RONDANA	1	1	1	1		
27	64E–43879–01	SCREW, WITH WASHER TORNILLO CON RONDANA	2	2	2	2		

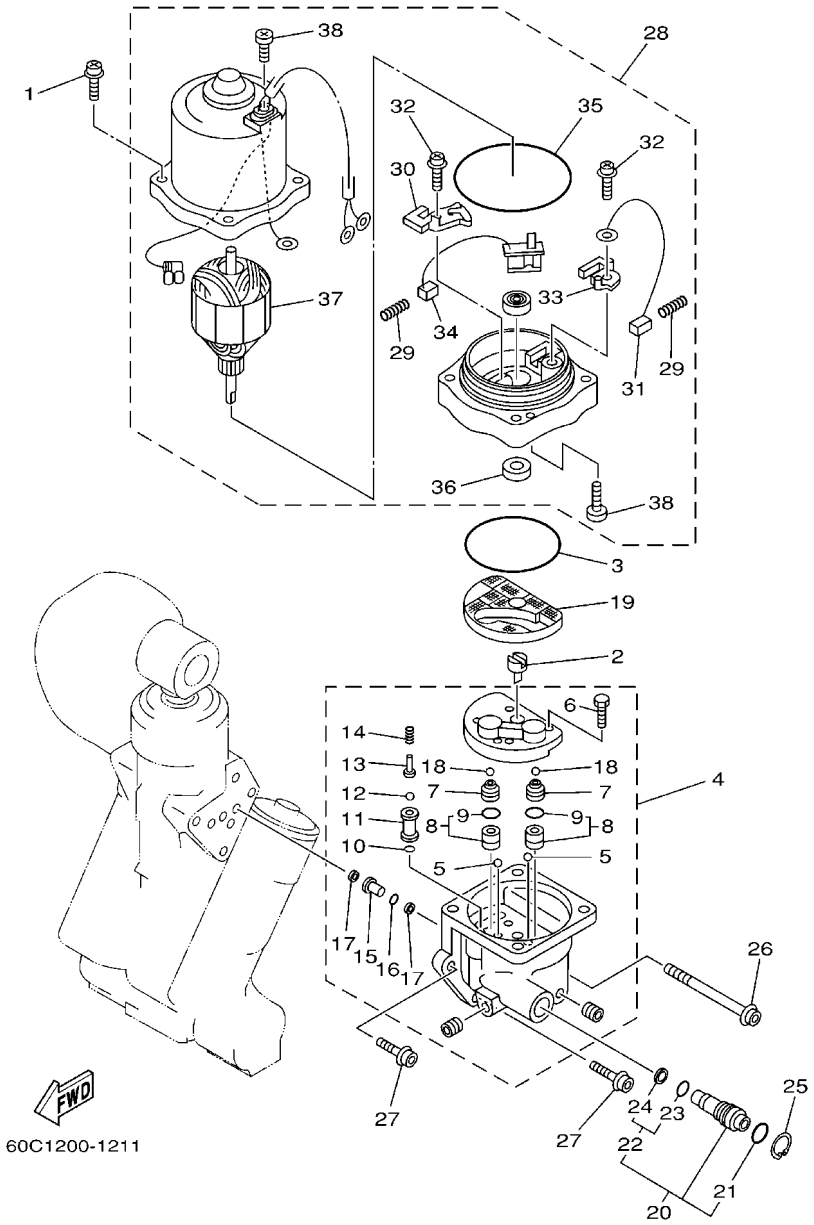

FIG. 20 POWER TRIM & TILT ASSY 2 — COMPONER Y PODER VARILLA 2

REF. NO.	PART NO. CODIGO Nº	DESCRIPTION DESCRIPCION	6G4J	60HJ	6K0J	60JJ		REMARKS OBSERVACIONES
28	64E–43880–04	MOTOR ASSY MOTOR COMPL.	1	1	1	1		
29	6H1–4386K–10	.SPRING, BRUSH .RESORTE, ESCOBILLA	2	2	2	2		
30	64E–4380J–00	.HOLDER, BRUSH .PORTAESCOBILLA	1	1	1	1		
31	64E–43891–00	.BRUSH 1 .ESCOBILLA 1	1	1	1	1		
32	97607–04310	.SCREW, WITH WASHER .TORNILLO CAB CON PLANA C/ARAN	2	2	2	2		
33	64E–4380F–00	.HOLDER, BRUSH 2 .PORTAESCOBILLA 2	1	1	1	1		
34	64E–43892–00	.BREAKER COMP. (BRUSH 2) .RUPTOR COMPLETO (ESCOBILLA 2)	1	1	1	1		
35	6G5–43865–01	.O-RING .ANILLO EN O 5	1	1	1	1		
36	93102–08M43	.OIL SEAL .SELLO ACEITE	1	1	1	1		
37	64E–43805–01	.ARMATURE ASSY .INDUCIDO COMPL.	1	1	1	1		
38	64E–43843–10	.SCREW, VALVE LOCK .TORNILLO	3	3	3	3		

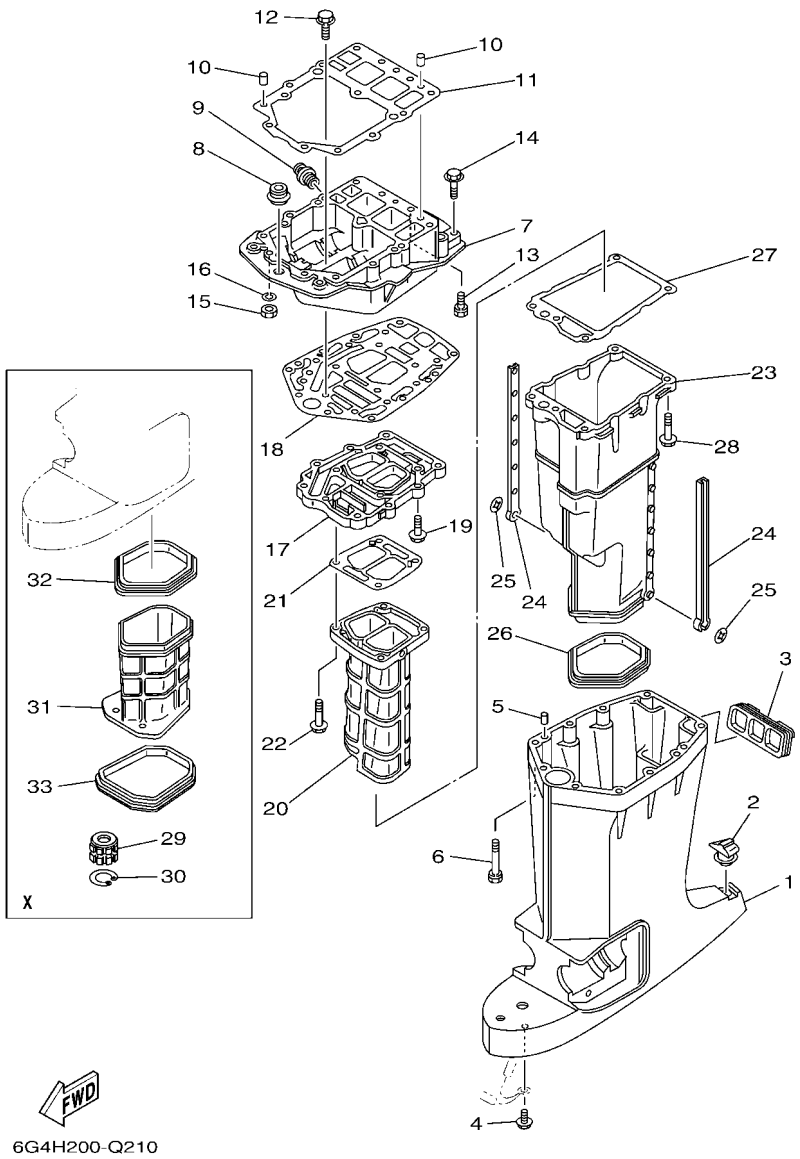

FIG. 21 UPPER CASING — FUNDA SUPERIOR

REF. NO.	PART NO. CODIGO Nº	DESCRIPTION DESCRIPCION	6G4J	60HJ	6K0J	60JJ		REMARKS OBSERVACIONES
1	6E5–45111–02–8D	CASING, UPPER CAJA SUPERIOR	1	1				L(20.3") L(20.3")
	6E5–45111–23–8D	CASING, UPPER CAJA SUPERIOR	1	1	1	1		X(25.3") X(25.3")
2	6E5–45155–00	CAP TAPA	1	1	1	1		
3	6E5–42769–00	SEAL, RUBBER SELLO DE GOMA	1	1	1	1		
4	95895–06010	BOLT, FLANGE TORNILLO DE REBORDE	1	1	1	1		
5	93608–12M05	PIN, DOWEL PASADOR DE CLAVIJA	2	2	2	2		
6	90119–08078	BOLT, WITH WASHER TORNILLO CON ARANDELA	6	6	6	6		
7	6G5–41137–02–CA	GUIDE, EXHAUST GUIA DE ESCAPE	1	1	1	1		
8	6E5–42724–00	GROMMET TAPON	1	1	1	1		
9	6G5–12581–00	JOINT, HOSE 1 CONEXION	1	1	1	1		
10	93608–12M05	PIN, DOWEL PASADOR DE CLAVIJA	2	2	2	2		
11	68F–45113–01	GASKET, UPPER CASING EMPAQUE	1	1	1	1		
12	90119–08M79	BOLT, WITH WASHER TORNILLO CON ARANDELA	2	2	2	2		
13	90119–08077	BOLT, WITH WASHER TORNILLO CON ARANDELA	4	4	4	4		
14	97595–08545	BOLT, WITH WASHER PERNO CON ARANDELA	2	2	2	2		
15	95380–08700	NUT TUERCA	2	2	2	2		
16	92995–08100	WASHER ARANDELA	2	2	2	2		
17	6G5–41131–01–CA	MANIFOLD, EXT. 1 TUBO MULTIPLE DE ESCAPE	1	1		1		EXCEPT FOR NME EXCEPT FOR NME
	6G5–41131–10–CA	MANIFOLD, EXT. 1 TUBO MULTIPLE DE ESCAPE		1	1	1		FOR NME FOR NME
18	6G5–45114–A1	GASKET, UPPER CASING EMPAQUE	1	1	1	1		
19	97595–08530	BOLT, WITH WASHER PERNO CON ARANDELA	4	4	4	4		
20	64D–41132–00–CA	MANIFOLD, EXHAUST TUBO MULTIPLE DE ESCAPE	1	1		1		EXCEPT FOR NME EXCEPT FOR NME
	64D–41132–10–CA	MANIFOLD, EXHAUST TUBO MULTIPLE DE ESCAPE		1	1	1		FOR NME FOR NME
21	6G5–41134–A1	GASKET, EXHAUST MANIFOLD EMPAQUE	1	1	1	1		
22	97595–08545	BOLT, WITH WASHER PERNO CON ARANDELA	4	4	4	4		
23	6E5–14711–01–CA	MUFFLER 1 SILENCIADOR 1	1	1		1		EXCEPT FOR NME EXCEPT FOR NME
	6E5–14711–10–CA	MUFFLER 1 SILENCIADOR 1		1	1	1		FOR NME FOR NME

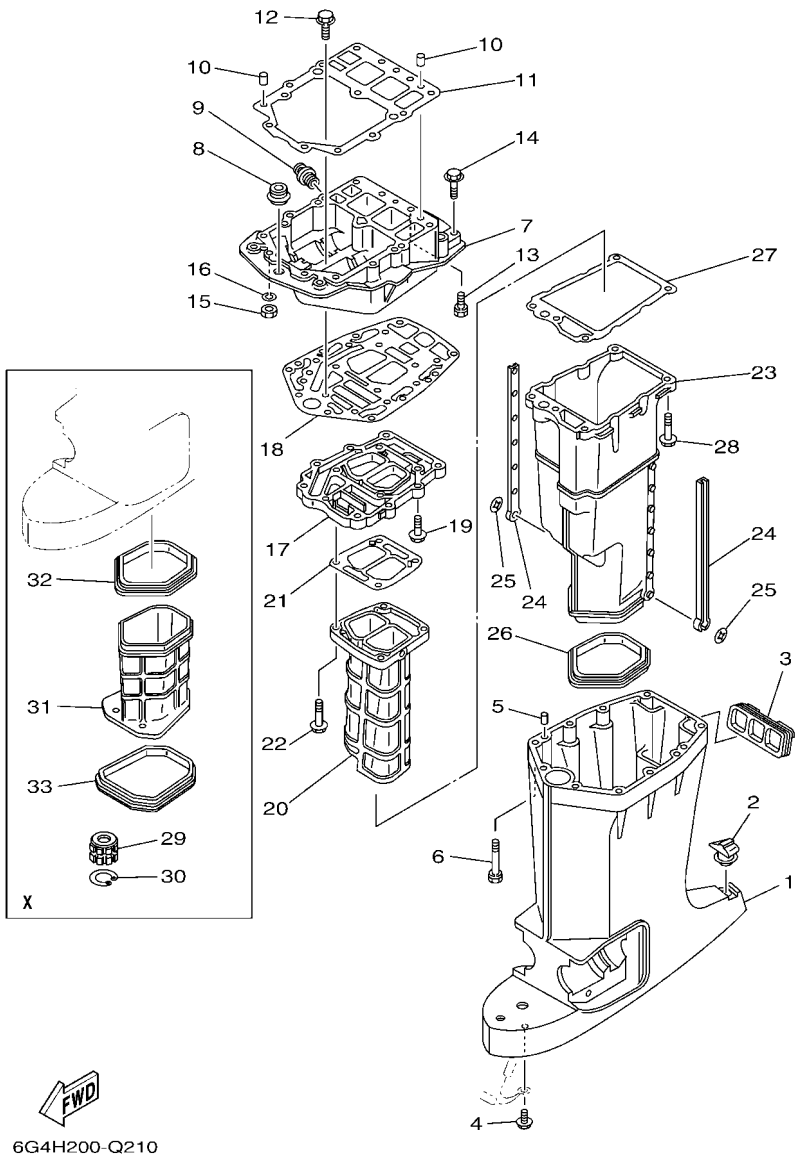

FIG. 21 UPPER CASING — FUNDA SUPERIOR

REF. NO.	PART NO. CODIGO Nº	DESCRIPTION DESCRIPCION	6G4J	60HJ	6K0J	60JJ		REMARKS OBSERVACIONES
24	6E5–14737–00	DAMPER, MUFFLER AMORTIGUADOR DE SILENCIADOR	2	2	2	2		
25	90183–05M02	NUT, SPRING TUERCA DE RESORTE	2	2	2	2		
26	6E5–45123–00	GASKET, MUFFLER EMPAQUE SILENCIADOR	1	1	1	1		
27	6E5–41135–A0	GASKET, EXHAUST MANIFOLD EMPAQUE	1	1	1	1		
28	97595–08545	BOLT, WITH WASHER PERNO CON ARANDELA	5	5	5	5		
29	6E5–45318–00	BUSHING, DRIVE SHAFT BUJE, EJE DE MANDO	1	1	1	1		X(25.3") X(25.3")
30	93420–36M01	CIRCLIP SEGURO	1	1	1	1		X(25.3") X(25.3")
31	64D–14721–20–CA	MUFFLER 2 SILENCIADOR 2	1	1		1		X(25.3") X(25.3")
	64D–14721–30–CA	MUFFLER 2 SILENCIADOR 2		1	1	1		X(25.3")-FOR NME X(25.3")-FOR NME
32	64D–45123–00	GASKET, MUFFLER EMPAQUE SILENCIADOR	1	1	1	1		X(25.3") X(25.3")
33	64D–45375–00	DAMPER, SEAL GOMA DE SELLO	1	1	1	1		X(25.3") X(25.3")

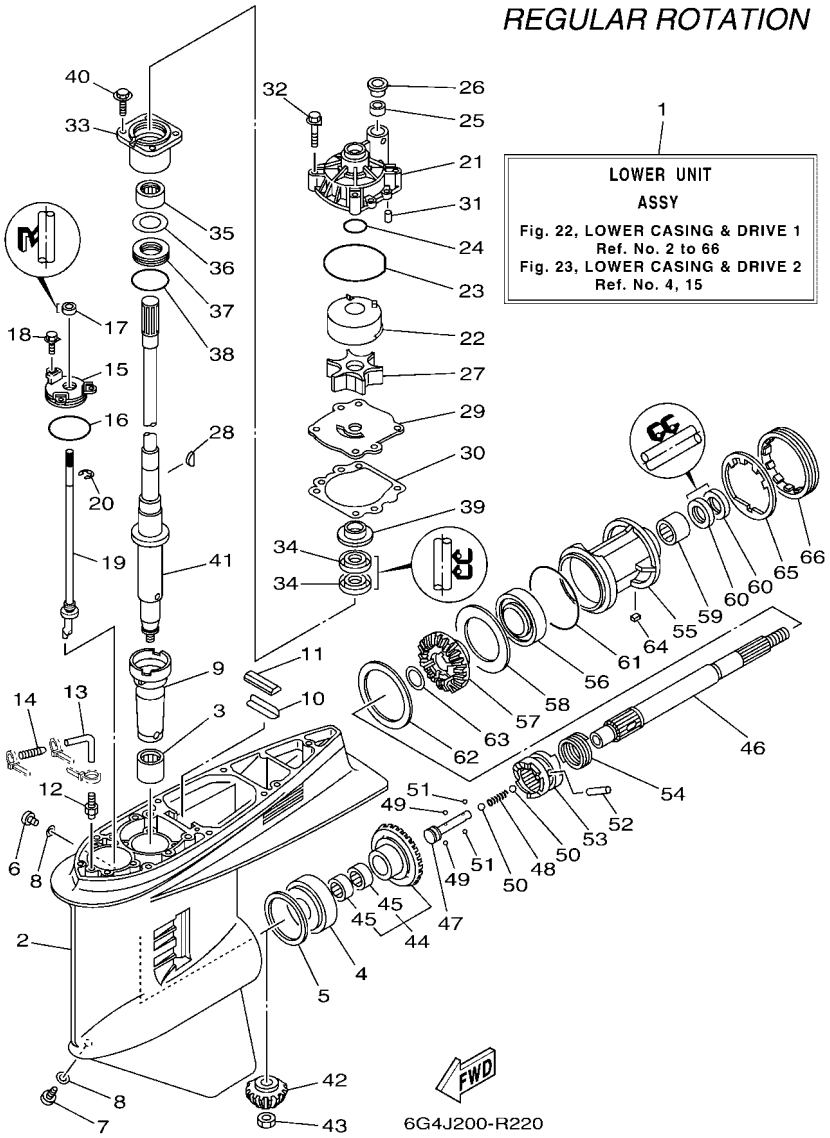

FIG. 22 LOWER CASING & DRIVE 1 — IMPULSOR E INFERIOR 1

REF. NO.	PART NO. CODIGO Nº	DESCRIPTION DESCRIPCION	6G4J	60HJ	6K0J	60JJ		REMARKS OBSERVACIONES
1	6G5–45300–17–8D	LOWER UNIT ASSY CONJUNTO UNIDAD INFERIOR	1	1				L(20.3"),RH L(20.3"),RH
	6G5–45300–27–8D	LOWER UNIT ASSY CONJUNTO UNIDAD INFERIOR	1	1				X(25.3"),RH X(25.3"),RH
2	6J9–45301–07–8D	CASING, LOWER FUNDA INFERIOR COMPLETA	1	1				
3	93311–928U5	BEARING COJINETE DE RODILLOS	1	1				
4	93332–000V3	BEARING COJINETE	1	1				
5	6G5–45567–01	SHIM (T:0.10MM) LAINA (T:0.10MM)	1	1				UR UR
	6G5–45567–10	SHIM (T:0.12MM) LAINA (T:0.12MM)	1	1				UR UR
	6G5–45567–20	SHIM (T:0.15MM) LAINA (T:0.15MM)	1	1				UR UR
	6G5–45567–30	SHIM (T:0.18MM) LAINA (T:0.18MM)	1	1				UR UR
	6G5–45567–40	SHIM (T:0.30MM) LAINA (T:0.30MM)	1	1				UR UR
	6G5–45567–50	SHIM (T:0.40MM) LAINA (T:0.40MM)	1	1				UR UR
	6G5–45567–60	SHIM (T:0.50MM) LAINA (T:0.50MM)	1	1				UR UR
6	90340–08002	PLUG, STRAIGHT SCREW TORNILLO, DE DRENAJE	1	1				
7	688–45341–10	PLUG, DRAIN TAPON, DREN	1	1				
8	90430–08003	GASKET JUNTA	2	2				
9	6G5–45536–01	SLEEVE, DRIVE SHAFT CAMISA EJE DE MANDO	1	1				
10	663–45376–00	GUIDE, SEAL DAMPER GUIA DE SELLO GOMA	1	1				L(20.3") L(20.3")
	64D–45376–00	GUIDE, SEAL DAMPER GUIA DE SELLO GOMA	1	1				X(25.3") X(25.3")
11	688–45375–00	DAMPER, SEAL GOMA DE SELLO	1	1				
12	6E5–45378–00	NIPPLE, HOSE NIPLE MANGUERA	1	1				
13	90445–07ME8	HOSE (L80) TUBO (L80)	1	1				L(20.3") L(20.3")
	90445–07ME9	HOSE (L120) TUBO (L120)	1	1				X(25.3") X(25.3")
14	6E5–83558–10	END, NIPPLE EXTREMO DE NIPLE	1	1				
15	6E5–45321–00	PLATE PLACA	1	1				
16	93210–58144	O-RING ANILLO O	1	1				
17	93106–09014	OIL SEAL SELLO ACEITE	1	1				
18	90119–06M10	BOLT, WITH WASHER TORNILLO CON ARANDELA	3	3				

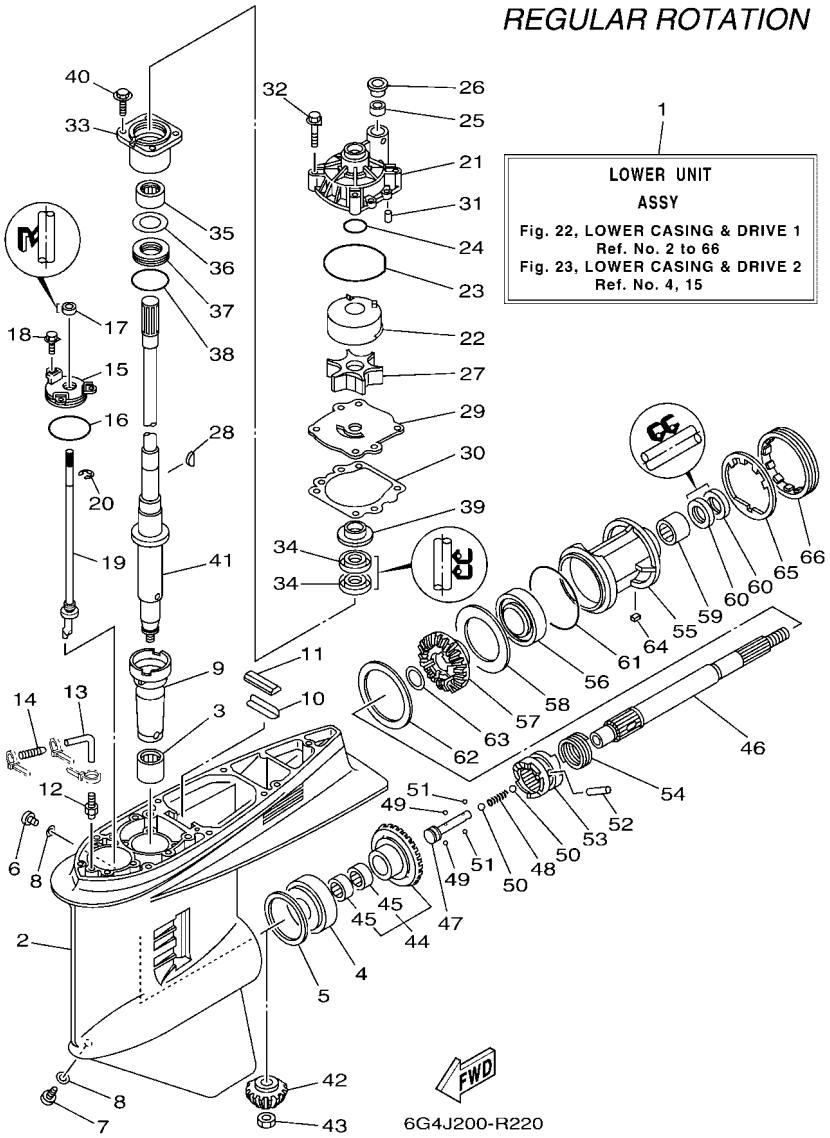

FIG. 22 LOWER CASING & DRIVE 1 — IMPULSOR E INFERIOR 1

REF. NO.	PART NO. CODIGO Nº	DESCRIPTION DESCRIPCION	6G4J	60HJ	6K0J	60JJ		REMARKS OBSERVACIONES
19	6G5–44150–03	SHIFT CAM ASSY CONJUNTO EJE LEVA COMPL.	1	1				
20	99001–08600	CIRCLIP PRESILLA REDONDA	1	1				
21	61A–44311–01	HOUSING, WATER PUMP CAJA BOMBA DE AGUA	1	1				
22	6R3–44322–42	INSERT, CARTRIDGE CARTUCHO	1	1				FOR CHROMATE FOR CHROMATE
23	93210–86M38	O-RING ANILLO O	1	1				
24	93210–37160	O-RING ANILLO O	1	1				
25	6E5–44365–00	DAMPER, WATER SEAL 1 HULE DE SELLO DE AGUA 1	1	1				
26	6E5–44312–00	COVER, WATER PUMP HOUSING CUBIERTA CAJA BOMBA DE AGUA	1	1				
27	6E5–44352–01	IMPELLER IMPULSOR	1	1				
28	90280–04M05	KEY, WOODRUFF CUNA WOODRUFF	1	1				
29	6G5–44323–41	OUTER PLATE, CARTRIDGE PLACA EXTERIOR DEL CARTUCHO	1	1				FOR CHROMATE FOR CHROMATE
30	6E5–44315–A0	GASKET, WATER PUMP EMPAQUE	1	1				
31	93606–12019	PIN, DOWEL PASADOR DE CLAVIJA	2	2				
32	90119–08M14	BOLT, WITH WASHER TORNILLO CON ARANDELA	4	4				
33	6E5–45331–00–9S	HOUSING, BEARING CAJA DE COJINETE	1	1				
34	93101–28M16	OIL SEAL SELLO ACEITE	2	2				
35	93317–330U2	BEARING COJINETE	1	1				
36	6E5–45587–01	SHIM (T:0.10MM) LAINA (T:0.10MM)	1	1				UR UR
	6E5–45587–10	SHIM (T:0.12MM) LAINA (T:0.12MM)	1	1				UR UR
	6E5–45587–20	SHIM (T:0.15MM) LAINA (T:0.15MM)	1	1				UR UR
	6E5–45587–30	SHIM (T:0.18MM) LAINA (T:0.18MM)	1	1				UR UR
	6E5–45587–40	SHIM (T:0.30MM) LAINA (T:0.30MM)	1	1				UR UR
	6E5–45587–50	SHIM (T:0.40MM) LAINA (T:0.40MM)	1	1				UR UR
	6E5–45587–60	SHIM (T:0.50MM) LAINA (T:0.50MM)	1	1				UR UR
37	93341–930V2	BEARING COJINETES CON RODAMIENTOS	1	1				
38	93210–55M14	O-RING ANILLO O	1	1				
39	6E5–45344–00	COVER, OIL SEAL CUBIERTA SELLO ACEITE	1	1				

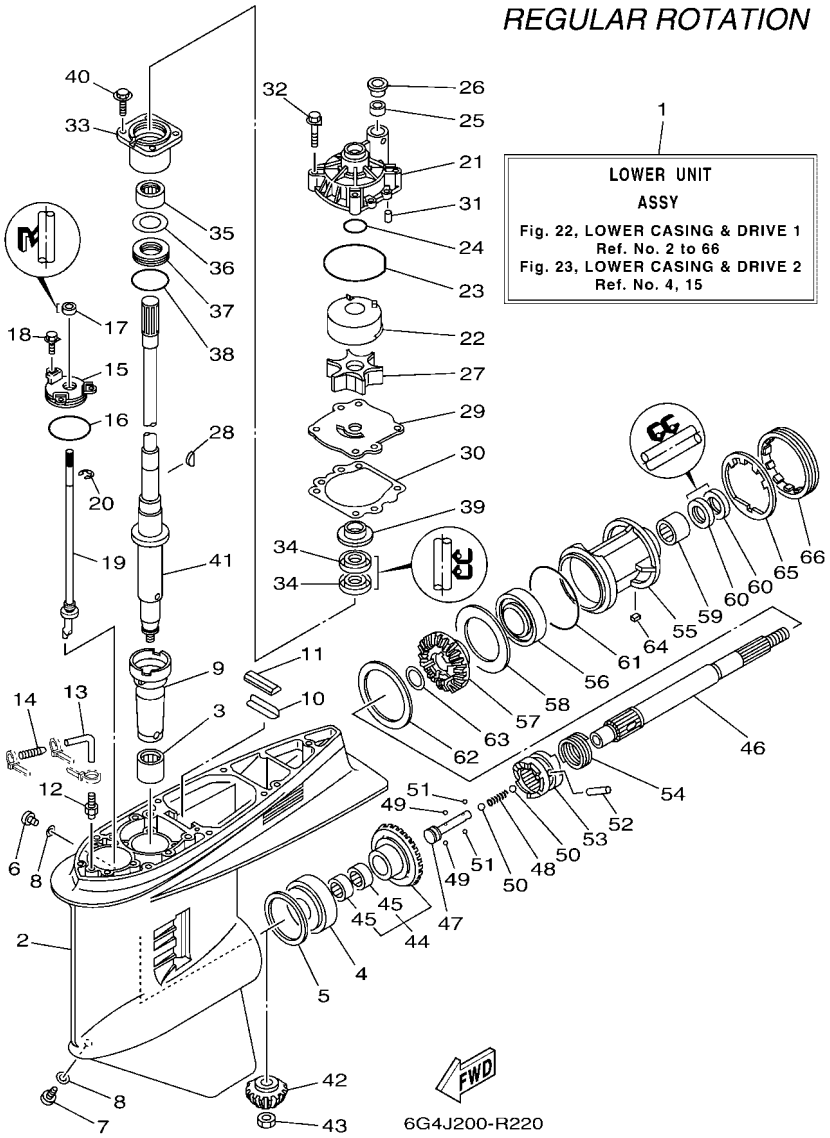

FIG. 22 LOWER CASING & DRIVE 1 — IMPULSOR E INFERIOR 1

REF. NO.	PART NO. CODIGO Nº	DESCRIPTION DESCRIPCION	6G4J	60HJ	6K0J	60JJ		REMARKS OBSERVACIONES
40	97595–08525	BOLT, WITH WASHER PERNO CON ARANDELA	4	4				
41	6G5–45501–02	DRIVE SHAFT COMP. EJE DE MANDO COMPL.	1	1				L(20.3") L(20.3")
	6G5–45501–22	DRIVE SHAFT COMP. EJE DE MANDO COMPL.	1	1				X(25.3") X(25.3")
42	6G5–45551–10	PINION (14T) PINON (14T)	1	1				
43	90170–16M01	NUT TUERCA	1	1				
44	6G5–45560–10	GEAR 1 (26T) ENGRANAJE 1 (26T)	1	1				
45	93315–425V3	.BEARING .COJINETE DE RODILLOS	2	2				
46	6J9–45611–01	SHAFT, PROPELLER EJE PROPUSOR	1	1				
47	6E5–45634–02	SLIDE, SHIFT DESLIZADOR, CAMBIO	1	1				
48	90501–16M37	SPRING, COMPRESSION RESORTE DE COMPRESION	1	1				
49	93507–32009	BALL ESFERA	2	2				
50	93511–32017	BALL ESFERA	2	2				
51	93503–16003	BALL ESFERA	2	2				
52	90250–08M07	PIN, STRAIGHT PASADOR CILINDRICO	1	1				
53	6G5–45631–10	CLUTCH, DOG EMBRAGUE DE GARRA	1	1				
54	6E5–45633–01	RING, CROSS PIN ANILLO DE PASADOR	1	1				
55	6J9–45332–00–CA	HOUSING, BEARING CAJA BALERO 2	1	1				
56	93306–209U0	BEARING COJINETE	1	1				
57	6G5–45571–02	GEAR 2 (26T) ENGRANAJE 2 (26T)	1	1				
58	6G5–45576–10	WASHER, THRUST 2 ARANDELA DE EMPUJE AXIAL 2	1	1				
59	93315–43061	BEARING COJINETE DE RODILLOS	1	1				
60	93101–30M17	OIL SEAL SELLO ACEITE	2	2				
61	93210–97M55	O-RING ANILLO O	1	1				
62	6G5–45577–02	SHIM (T:0.10MM) LAINA (T:0.10MM)	1	1				UR UR
	6G5–45577–10	SHIM (T:0.12MM) LAINA (T:0.12MM)	1	1				UR UR
	6G5–45577–20	SHIM (T:0.15MM) LAINA (T:0.15MM)	1	1				UR UR
	6G5–45577–30	SHIM (T:0.18MM) LAINA (T:0.18MM)	1	1				UR UR

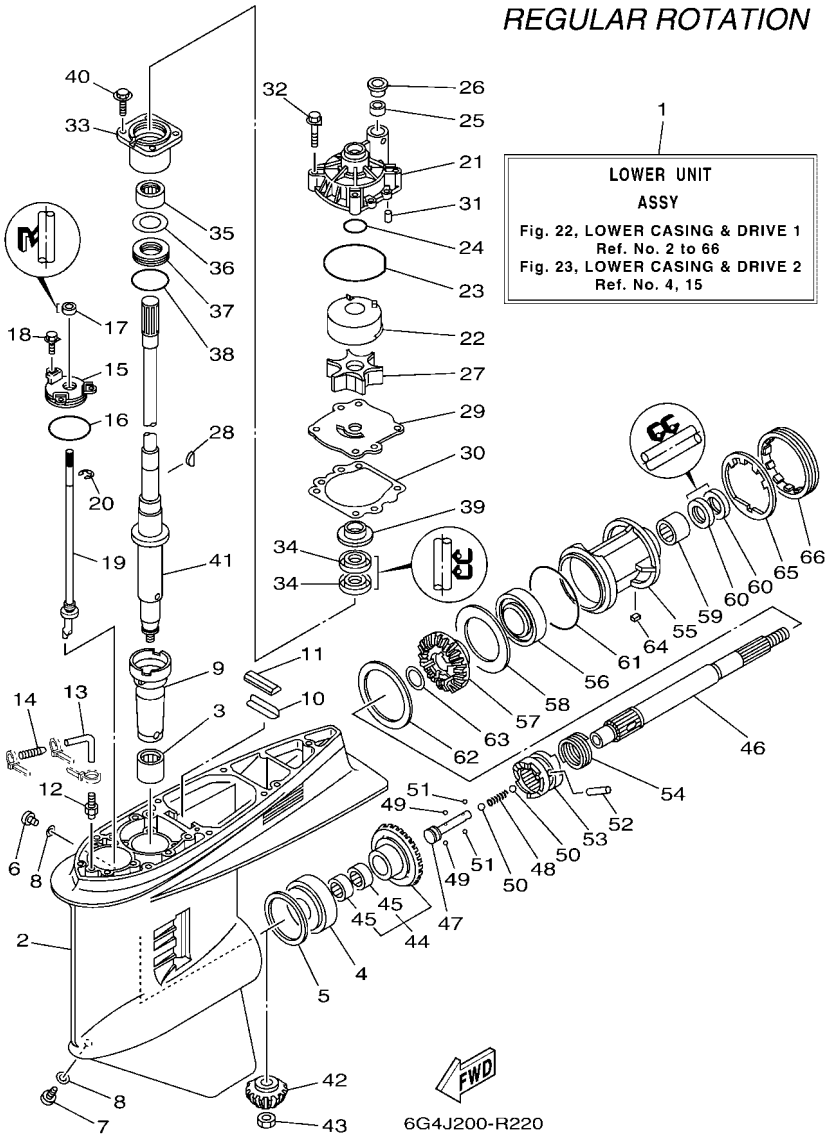

FIG. 22 LOWER CASING & DRIVE 1 — IMPULSOR E INFERIOR 1

REF. NO.	PART NO. CODIGO Nº	DESCRIPTION DESCRIPCION	6G4J	60HJ	6K0J	60JJ		REMARKS OBSERVACIONES
62	6G5–45577–40	SHIM (T:0.30MM) LAINA (T:0.30MM)	1	1				UR UR
	6G5–45577–50	SHIM (T:0.40MM) LAINA (T:0.40MM)	1	1				UR UR
	6G5–45577–60	SHIM (T:0.50MM) LAINA (T:0.50MM)	1	1				UR UR
63	90201–30M92	WASHER, PLATE ARANDELA PLANA	1	1				
64	90282–04M00	KEY, STRAIGHT CHAVETA, RECTA	1	1				
65	6G5–45383–01	WASHER, CLAW ARANDELA DE UNA	1	1				
66	6G5–45384–02	NUT TUERCA	1	1				

FIG. 23 LOWER CASING & DRIVE 2 — IMPULSOR E INFERIOR 2

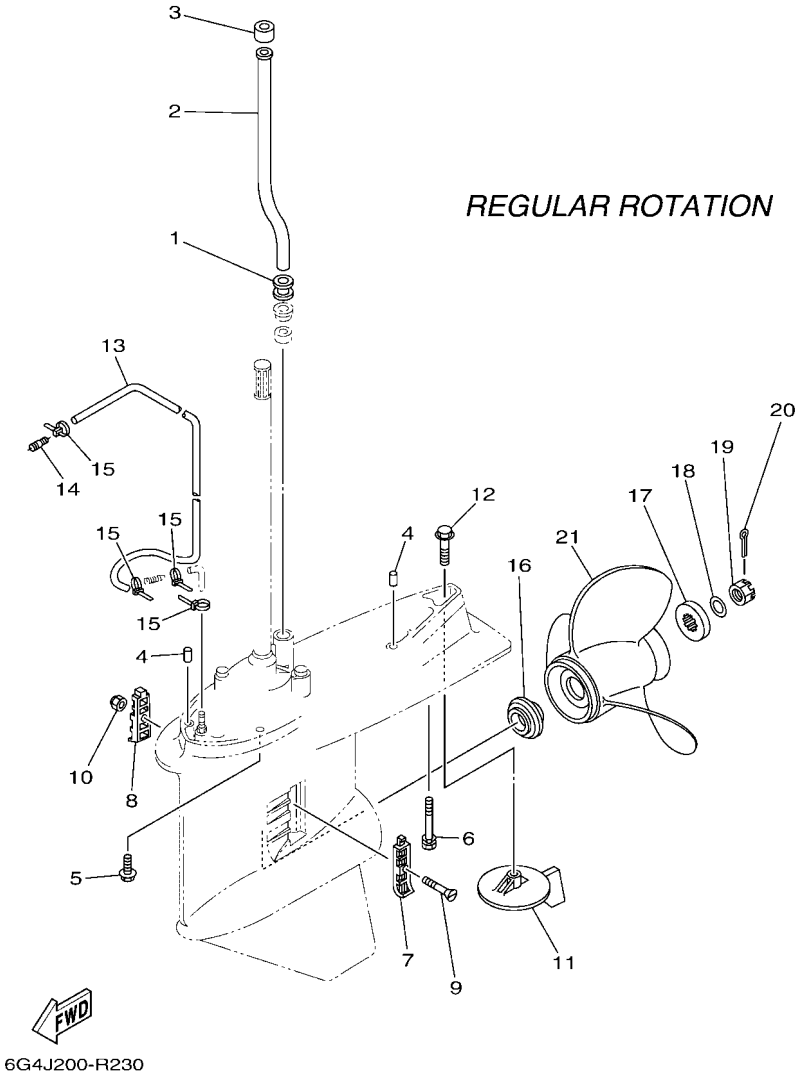

REF. NO.	PART NO. CODIGO Nº	DESCRIPTION DESCRIPCION	6G4J	60HJ	6K0J	60JJ		REMARKS OBSERVACIONES
1	6E5–44366–00	DAMPER, WATER SEAL 2 GOMA DEL SELLO DE AGUA 2	1	1				
2	6E5–44361–00	TUBE, WATER 1 TUBO DE AGUA 1	1	1				L(20.3") L(20.3")
	6E5–44361–20	TUBE, WATER 1 TUBO DE AGUA 1	1	1				X(25.3") X(25.3")
3	6E5–44365–00	DAMPER, WATER SEAL 1 HULE DE SELLO DE AGUA 1	1	1				
4	93608–12M05	PIN, DOWEL PASADOR DE CLAVIJA	2	2				
5	97595–10545	BOLT, WITH WASHER PERNO CON ARANDELA	6	6				
6	90119–10M89	BOLT, WITH WASHER TORNILLO CON ARANDELA	1	1				
7	6J9–45214–00	COVER, WATER INLET 1 CUBIERTA ENTRADA AGUA 1	1	1				
8	6J9–45215–00	COVER, WATER INLET 2 CUBIERTA ENTRADA AGUA 2	1	1				
9	90152–05M08	SCREW, COUNTERSUNK TORNILLO EMBUTIDO	1	1				
10	90185–05002	NUT, NYLON TUERCA AUTOBLOCANTE	1	1				
11	6J9–45371–01	TAB-TRIM QUILLA ESTABILIZADOR	1	1				
12	90105–10M00	BOLT, FLANGE TORNILLO	1	1				
13	90445–07M33	HOSE (L1080) TUBO (L1080)	1	1				
14	6E5–83558–00	END, NIPPLE EXTREMO DE NIPLE	1	1				
15	90465–11M10	CLAMP BRIDA	4	4				
16	6E5–45987–01	SPACER 1 ESPACIADOR 1	1	1				
17	688–45997–01	SPACER 2 ESPACIADOR 2	1	1				
18	92990–18200	WASHER ARANDELA PLANA	1	1				
19	90171–18M04	NUT, CASTLE TUERCA ENTALLADA	1	1				
20	91490–40030	PIN. COTTER CHAVETA	1	1				
21	6G5–45952–00	PROPELLER (3X14-5/8"X16"-M) PROPELA (3X14-5/8"X16"-M)	1	1				UR UR
	6G5–45947–01	PROPELLER (3X14-1/2"X17"-M) PROPELA (3X14-1/2"X17"-M)	1	1				UR UR
	6G5–45978–03	PROPELLER (3X13-3/4"X17"-M2) PROPELA (3X13-3/4"X17"-M2)	1	1				UR UR
	6G5–45945–01	PROPELLER (3X14"X19"-M) PROPELA (3X14"X19"-M)	1	1				UR UR
	6G5–45974–03	PROPELLER (3X13-3/4"X19"-M2) PROPELA (3X13-3/4"X19"-M2)	1	1				UR UR
	6G5–45972–02	PROPELLER (3X13-3/4"X21"-M) PROPELA (3X13-3/4"X21"-M)	1	1				UR UR

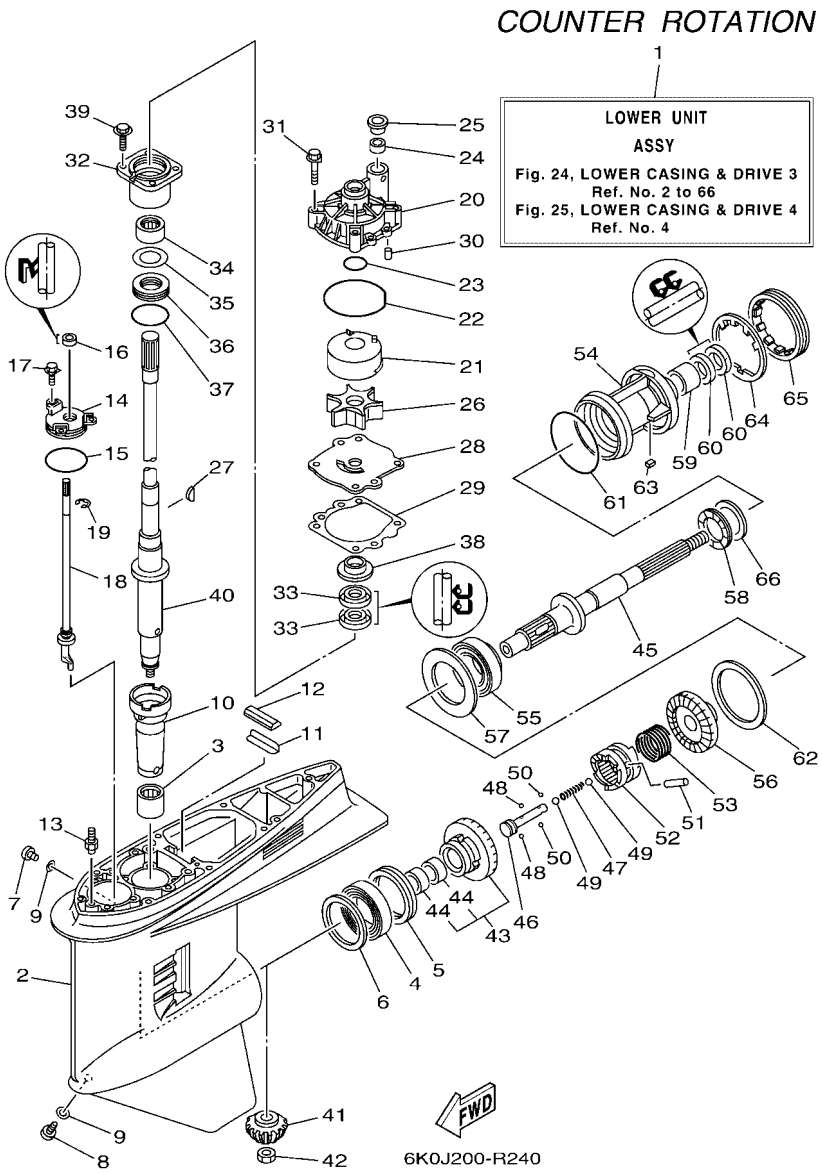

FIG. 24 LOWER CASING & DRIVE 3 — IMPULSOR E INFERIOR 3

REF. NO.	PART NO. CODIGO Nº	DESCRIPTION DESCRIPCION	6G4J	60HJ	6K0J	60JJ		REMARKS OBSERVACIONES
1	6K1–45300–26–8D	LOWER UNIT ASSY CONJUNTO UNIDAD INFERIOR			1	1		X(25.3"),LH X(25.3"),LH
2	6J9–45301–07–8D	CASING, LOWER FUNDA INFERIOR COMPLETA			1	1		
3	93311–928U5	BEARING COJINETE DE RODILLOS			1	1		
4	93390–000U2	BEARING COJINETE DE RODILLOS			1	1		
5	93341–465U4	BEARING COJINETES CON RODAMIENTOS			1	1		
6	6G5–45567–01	SHIM (T:0.10MM) LAINA (T:0.10MM)			1	1		UR UR
	6G5–45567–10	SHIM (T:0.12MM) LAINA (T:0.12MM)			1	1		UR UR
	6G5–45567–20	SHIM (T:0.15MM) LAINA (T:0.15MM)			1	1		UR UR
	6G5–45567–30	SHIM (T:0.18MM) LAINA (T:0.18MM)			1	1		UR UR
	6G5–45567–40	SHIM (T:0.30MM) LAINA (T:0.30MM)			1	1		UR UR
	6G5–45567–50	SHIM (T:0.40MM) LAINA (T:0.40MM)			1	1		UR UR
	6G5–45567–60	SHIM (T:0.50MM) LAINA (T:0.50MM)			1	1		UR UR
7	90340–08002	PLUG, STRAIGHT SCREW TORNILLO, DE DRENAJE			1	1		
8	688–45341–10	PLUG, DRAIN TAPON, DREN			1	1		
9	90430–08003	GASKET JUNTA			2	2		
10	6G5–45536–01	SLEEVE, DRIVE SHAFT CAMISA EJE DE MANDO			1	1		
11	64D–45376–00	GUIDE, SEAL DAMPER GUIA DE SELLO GOMA			1	1		X(25.3") X(25.3")
12	688–45375–00	DAMPER, SEAL GOMA DE SELLO			1	1		
13	6J8–45378–00	NIPPLE, HOSE (PLUG) NIPLE MANGUERA (TAPON)			1	1		
14	6E5–45321–00	PLATE PLACA			1	1		
15	93210–58144	O-RING ANILLO O			1	1		
16	93106–09014	OIL SEAL SELLO ACEITE			1	1		
17	90119–06M10	BOLT, WITH WASHER TORNILLO CON ARANDELA			3	3		
18	6K1–44150–02	SHIFT CAM ASSY CONJUNTO EJE LEVA COMPL.			1	1		
19	99001–08600	CIRCLIP PRESILLA REDONDA			1	1		
20	61A–44311–01	HOUSING, WATER PUMP CAJA BOMBA DE AGUA			1	1		
21	6R3–44322–42	INSERT, CARTRIDGE CARTUCHO			1	1		FOR CHROMATE FOR CHROMATE

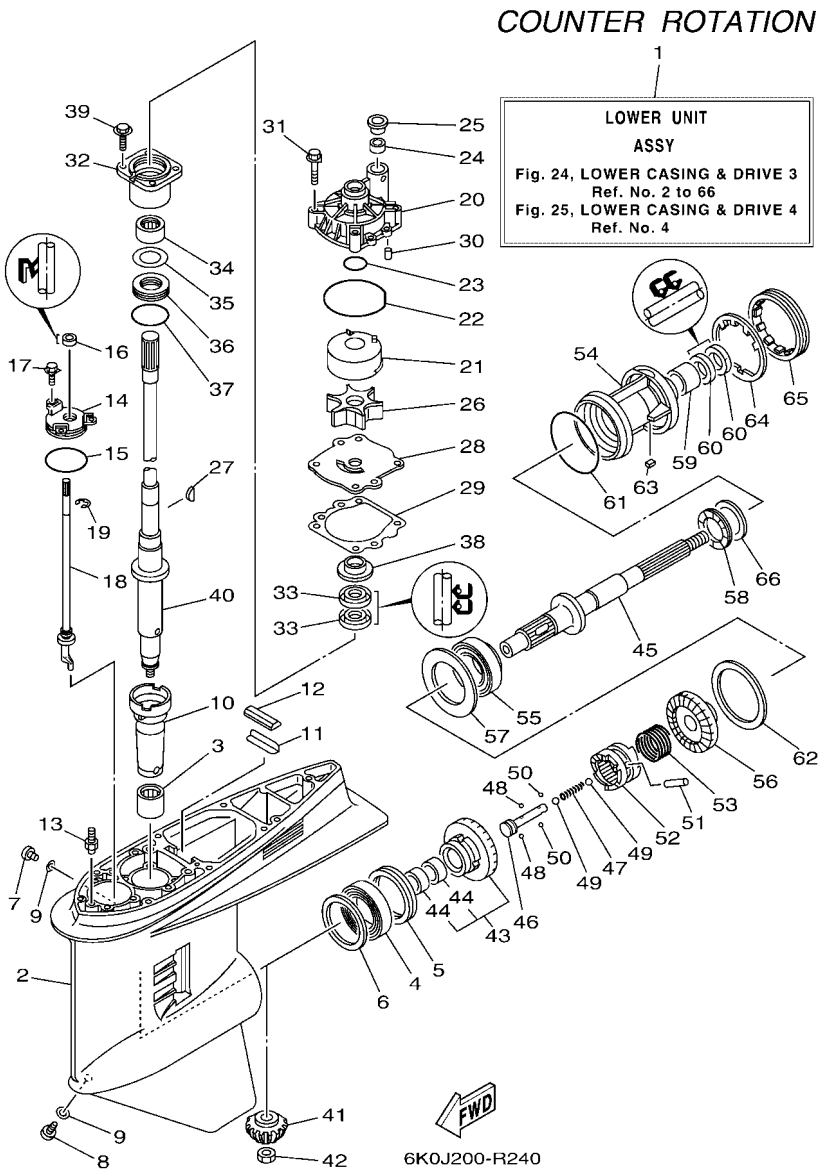

FIG. 24 LOWER CASING & DRIVE 3 — IMPULSOR E INFERIOR 3

REF. NO.	PART NO. CODIGO Nº	DESCRIPTION DESCRIPCION	6G4J	60HJ	6K0J	60JJ		REMARKS OBSERVACIONES
22	93210–86M38	O-RING ANILLO O			1	1		
23	93210–37160	O-RING ANILLO O			1	1		
24	6E5–44365–00	DAMPER, WATER SEAL 1 HULE DE SELLO DE AGUA 1			1	1		
25	6E5–44312–00	COVER, WATER PUMP HOUSING CUBIERTA CAJA BOMBA DE AGUA			1	1		
26	6E5–44352–01	IMPELLER IMPULSOR			1	1		
27	90280–04M05	KEY, WOODRUFF CUNA WOODRUFF			1	1		
28	6G5–44323–41	OUTER PLATE, CARTRIDGE PLACA EXTERIOR DEL CARTUCHO			1	1		FOR CHROMATE FOR CHROMATE
29	6E5–44315–A0	GASKET, WATER PUMP EMPAQUE			1	1		
30	93606–12019	PIN, DOWEL PASADOR DE CLAVIJA			2	2		
31	90119–08M14	BOLT, WITH WASHER TORNILLO CON ARANDELA			4	4		
32	6E5–45331–00–9S	HOUSING, BEARING CAJA DE COJINETE			1	1		
33	93101–28M16	OIL SEAL SELLO ACEITE			2	2		
34	93317–330U2	BEARING COJINETE			1	1		
35	6E5–45587–01	SHIM (T:0.10MM) LAINA (T:0.10MM)			1	1		UR UR
	6E5–45587–10	SHIM (T:0.12MM) LAINA (T:0.12MM)			1	1		UR UR
	6E5–45587–20	SHIM (T:0.15MM) LAINA (T:0.15MM)			1	1		UR UR
	6E5–45587–30	SHIM (T:0.18MM) LAINA (T:0.18MM)			1	1		UR UR
	6E5–45587–40	SHIM (T:0.30MM) LAINA (T:0.30MM)			1	1		UR UR
	6E5–45587–50	SHIM (T:0.40MM) LAINA (T:0.40MM)			1	1		UR UR
	6E5–45587–60	SHIM (T:0.50MM) LAINA (T:0.50MM)			1	1		UR UR
36	93341–930V2	BEARING COJINETES CON RODAMIENTOS			1	1		
37	93210–55M14	O-RING ANILLO O			1	1		
38	6E5–45344–00	COVER, OIL SEAL CUBIERTA SELLO ACEITE			1	1		
39	97595–08525	BOLT, WITH WASHER PERNO CON ARANDELA			4	4		
40	6G5–45501–22	DRIVE SHAFT COMP. EJE DE MANDO COMPL.			1	1		X(25.3") X(25.3")
41	6G5–45551–10	PINION (14T) PINON (14T)			1	1		
42	90170–16M01	NUT TUERCA			1	1		

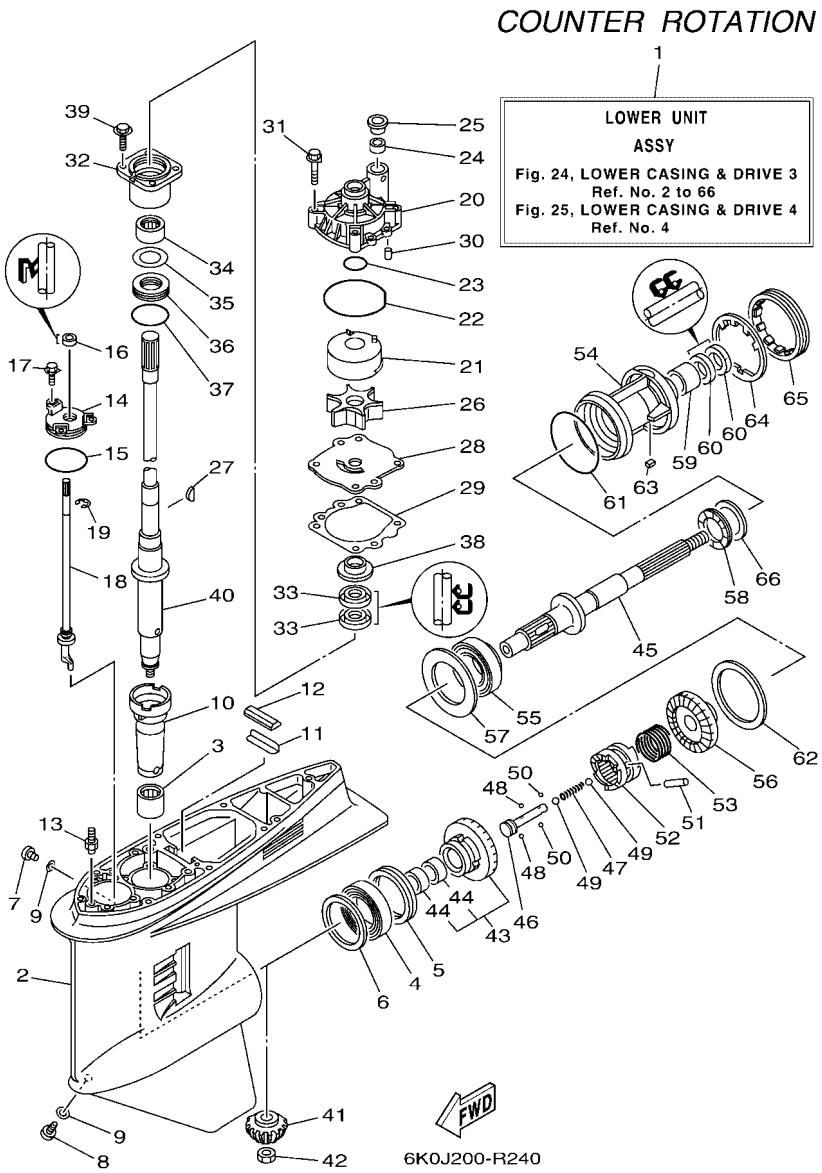

FIG. 24 LOWER CASING & DRIVE 3 — IMPULSOR E INFERIOR 3

REF. NO.	PART NO. CODIGO Nº	DESCRIPTION DESCRIPCION	6G4J	60HJ	6K0J	60JJ		REMARKS OBSERVACIONES
43	6K1–45560–01	GEAR 1 (26T) ENGRANAJE 1 (26T)			1	1		
44	93315–425V3	.BEARING .COJINETE DE RODILLOS			2	2		
45	6K1–45611–10	SHAFT, PROPELLER EJE PROPUSOR			1	1		
46	6E5–45634–02	SLIDE, SHIFT DESLIZADOR, CAMBIO			1	1		
47	90501–16M37	SPRING, COMPRESSION RESORTE DE COMPRESION			1	1		
48	93507–32009	BALL ESFERA			2	2		
49	93511–32017	BALL ESFERA			2	2		
50	93503–16003	BALL ESFERA			2	2		
51	90250–08M07	PIN, STRAIGHT PASADOR CILINDRICO			1	1		
52	6G5–45631–10	CLUTCH, DOG EMBRAGUE DE GARRA			1	1		
53	6E5–45633–01	RING, CROSS PIN ANILLO DE PASADOR			1	1		
54	6K1–45332–01–CA	HOUSING, BEARING CAJA BALERO 2			1	1		
55	93332–00048	BEARING COJINETE			1	1		
56	6K1–45570–20	GEAR 2 (26T) ENGRANAJE 2 (26T)			1	1		
57	6K1–45576–00	WASHER, THRUST 2 ARANDELA DE EMPUJE AXIAL 2			1	1		
58	93341–440U5	BEARING COJINETES CON RODAMIENTOS			1	1		
59	93315–43061	BEARING COJINETE DE RODILLOS			1	1		
60	93101–30M17	OIL SEAL SELLO ACEITE			2	2		
61	93210–97M55	O-RING ANILLO O			1	1		
62	6G5–45577–02	SHIM (T:0.10MM) LAINA (T:0.10MM)			1	1		UR UR
	6G5–45577–10	SHIM (T:0.12MM) LAINA (T:0.12MM)			1	1		UR UR
	6G5–45577–20	SHIM (T:0.15MM) LAINA (T:0.15MM)			1	1		UR UR
	6G5–45577–30	SHIM (T:0.18MM) LAINA (T:0.18MM)			1	1		UR UR
	6G5–45577–40	SHIM (T:0.30MM) LAINA (T:0.30MM)			1	1		UR UR
	6G5–45577–50	SHIM (T:0.40MM) LAINA (T:0.40MM)			1	1		UR UR
	6G5–45577–60	SHIM (T:0.50MM) LAINA (T:0.50MM)			1	1		UR UR
63	90282–04M00	KEY, STRAIGHT CHAVETA, RECTA			1	1		

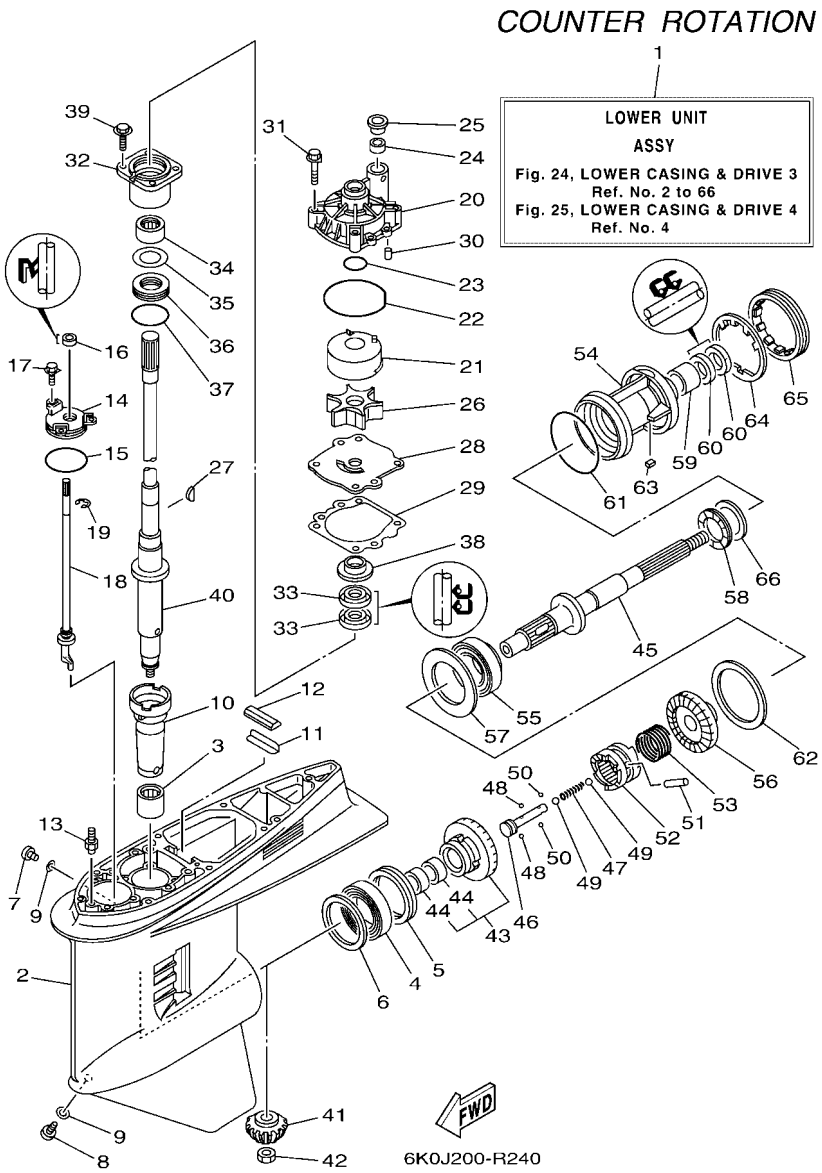

FIG. 24 LOWER CASING & DRIVE 3 — IMPULSOR E INFERIOR 3

REF. NO.	PART NO. CODIGO Nº	DESCRIPTION DESCRIPCION	6G4J	60HJ	6K0J	60JJ		REMARKS OBSERVACIONES
64	6G5–45383–01	WASHER, CLAW ARANDELA DE UNA			1	1		
65	6G5–45384–02	NUT TUERCA			1	1		
66	6K1–45578–01	SHIM (T:0.10MM) LAINA (T:0.10MM)			1	1		UR UR
	6K1–45578–10	SHIM (T:0.12MM) LAINA (:0.12MM)			1	1		UR UR
	6K1–45578–20	SHIM (T:0.15MM) LAINA (T:0.15MM)			1	1		UR UR
	6K1–45578–30	SHIM (T:0.18MM) LAINA (T:0.18MM)			1	1		UR UR
	6K1–45578–40	SHIM (T:0.30MM) LAINA (T:0.30MM)			1	1		UR UR
	6K1–45578–50	SHIM (T:0.40MM) LAINA (T:0.40MM)			1	1		UR UR
	6K1–45578–60	SHIM (T:0.50MM) LAINA (T:0.50MM)			1	1		UR UR

FIG. 25 LOWER CASING & DRIVE 4 — IMPULSOR E INFERIOR 4

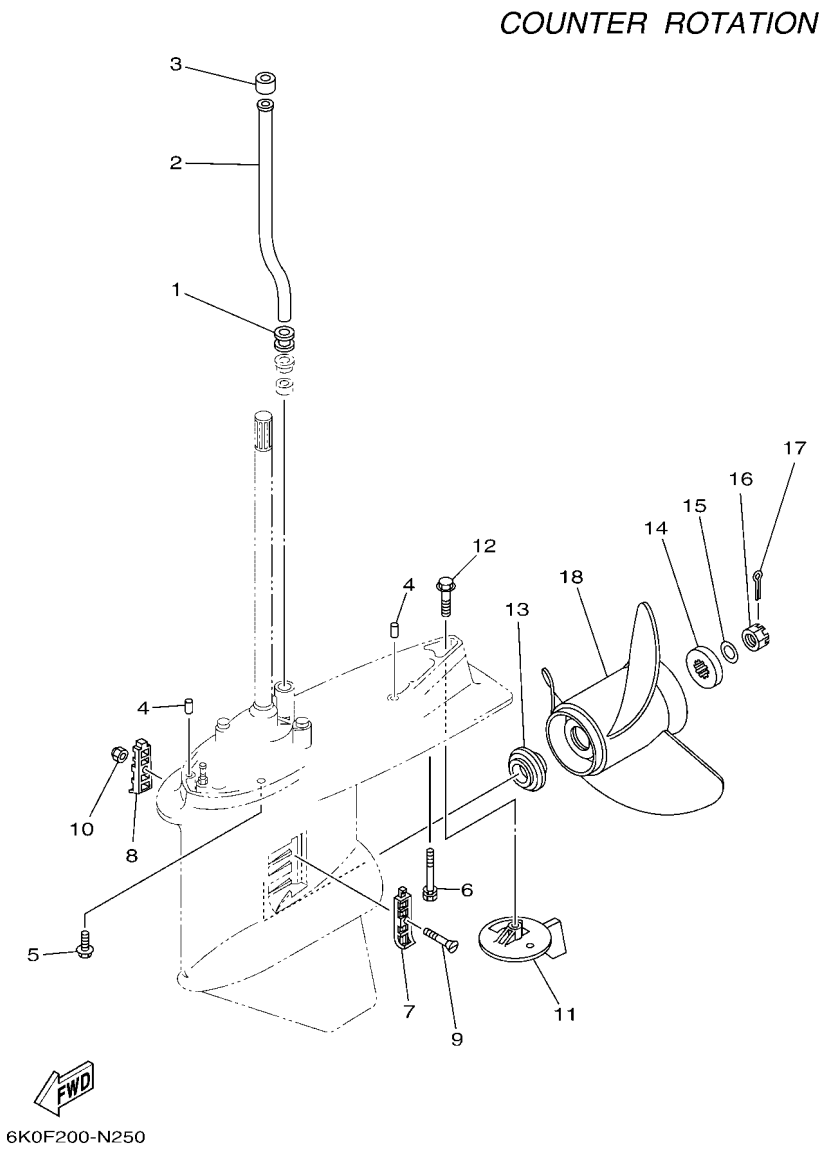

REF. NO.	PART NO. CODIGO Nº	DESCRIPTION DESCRIPCION	6G4J	60HJ	6K0J	60JJ		REMARKS OBSERVACIONES
1	6E5–44366–00	DAMPER, WATER SEAL 2 GOMA DEL SELLO DE AGUA 2			1	1		
2	6E5–44361–20	TUBE, WATER 1 TUBO DE AGUA 1			1	1		X(25.3") X(25.3")
3	6E5–44365–00	DAMPER, WATER SEAL 1 HULE DE SELLO DE AGUA 1			1	1		
4	93608–12M05	PIN, DOWEL PASADOR DE CLAVIJA			2	2		
5	97595–10545	BOLT, WITH WASHER PERNO CON ARANDELA			6	6		
6	90119–10M89	BOLT, WITH WASHER TORNILLO CON ARANDELA			1	1		
7	6J9–45214–00	COVER, WATER INLET 1 CUBIERTA ENTRADA AGUA 1			1	1		
8	6J9–45215–00	COVER, WATER INLET 2 CUBIERTA ENTRADA AGUA 2			1	1		
9	90152–05M08	SCREW, COUNTERSUNK TORNILLO EMBUTIDO			1	1		
10	90185–05002	NUT, NYLON TUERCA AUTOBLOCANTE			1	1		
11	6K1–45371–02	TAB-TRIM QUILLA ESTABILIZADOR			1	1		
12	90105–10M00	BOLT, FLANGE TORNILLO			1	1		
13	6E5–45987–01	SPACER 1 ESPACIADOR 1			1	1		
14	688–45997–01	SPACER 2 ESPACIADOR 2			1	1		
15	92990–18200	WASHER ARANDELA PLANA			1	1		
16	90171–18M04	NUT, CASTLE TUERCA ENTALLADA			1	1		
17	91490–40030	PIN. COTTER CHAVETA			1	1		
18	6K1–45947–00	PROPELLER (3X14-1/2"X17"-ML) PROPELA (3X14-1/2"X17"-ML)			1	1		UR UR
	6K1–45945–00	PROPELLER (3X14"X19"-ML) PROPELA (3X14"X19"-ML)			1	1		UR UR
	6K1–45974–02	PROPELLER (3X13-3/4"X19"-ML1) PROPELA (3X13-3/4"X19"-ML1)			1	1		UR UR
	6K1–45972–01	PROPELLER (3X13-3/4"X21"-ML) PROPELA (3X13-3/4"X21"-ML)			1	1		UR UR

FIG. 26 STEERING GUIDE ATTACHMENT 1 — ADITAMENTO GUIA DE GOBIERNO 1

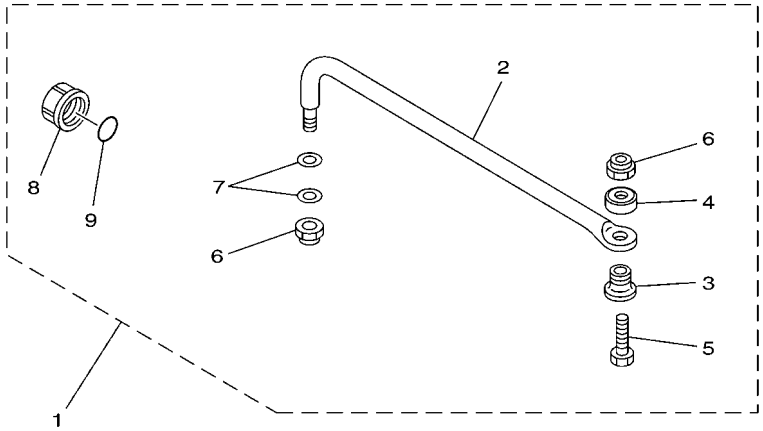

67H0100-9290

REF. NO.	PART NO. CODIGO Nº	DESCRIPTION DESCRIPCION	6G4J	60HJ	6K0J	60JJ		REMARKS OBSERVACIONES
1	6E5–61350–02	STEERING GUIDE ATTACHMENT KIT ESTUCHE ADITAMENTO GUIA DE TIM	1	1				AP EXCEPT BLZ,CAR(CE) AP EXCEPT BLZ,CAR(CE)
2	6E5–61351–01	.ROD, STEERING LINK .VARILLA ESLABON DIRECCION	1	1				
3	90387–10M61	.COLLAR .ESPACIADOR	1	1				
4	90560–12M01	.SPACER .SEPARADOR	1	1				
5	6E5–61355–00	.BOLT .TORNILLO	1	1				
6	90185–09M01	.NUT, SELF-LOCKING .TUERCA AUTOBLOCANTE	2	2				
7	90201–10M20	.WASHER, PLATE .ARANDELA PLANA	2	2				
8	6E5–43145–01	.CAP, CLAMP BRACKET .TAPA	1	1				
9	93210–16275	.O-RING .ANILLO O	1	1				

FIG. 27 STEERING GUIDE ATTACHMENT 2 — ADITAMENTO GUIA DE GOBIERNO 2

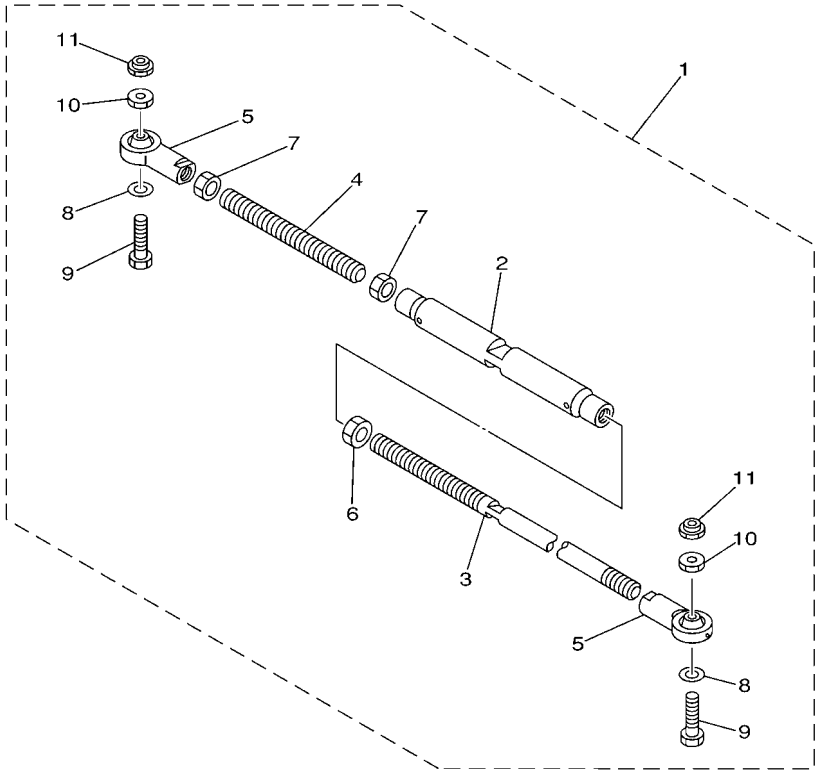

67H0100-0300

REF. NO.	PART NO. CODIGO Nº	DESCRIPTION DESCRIPCION	6G4J	60HJ	6K0J	60JJ		REMARKS OBSERVACIONES
1	6E5–61301–01	TWIN KIT (L:600-800MM) KIT ADITAMENTO (L:600-800MM)			1	1		AP AP
2	6E5–61313–00	.ADJUSTER .AJUSTADOR			1	1		
3	6E5–61311–11	.TIE BAR .BARRA SEPARADORA			1	1		
4	6E5–61315–00	.TIE BAR .ROTOR DE BOMBA AGUA			1	1		
5	6E5–61303–00	.STEERING AXLE COMP. .OJO-DIRECCION COMPL.			2	2		
6	90170–14M06	.NUT .TUERCA			1	1		
7	95380–14700	.NUT .TUERCA			2	2		
8	90201–10M76	.WASHER, PLATE .ARANDELA PLANA			2	2		
9	90101–09M70	.BOLT .TORNILLO			2	2		
10	90170–09M05	.NUT .TUERCA			2	2		
11	90185–09M01	.NUT, SELF-LOCKING .TUERCA AUTOBLOCANTE			2	2		

FIG. 28 REMOTE CONTROL BOX — CONTROL REMOTO COMPLETO

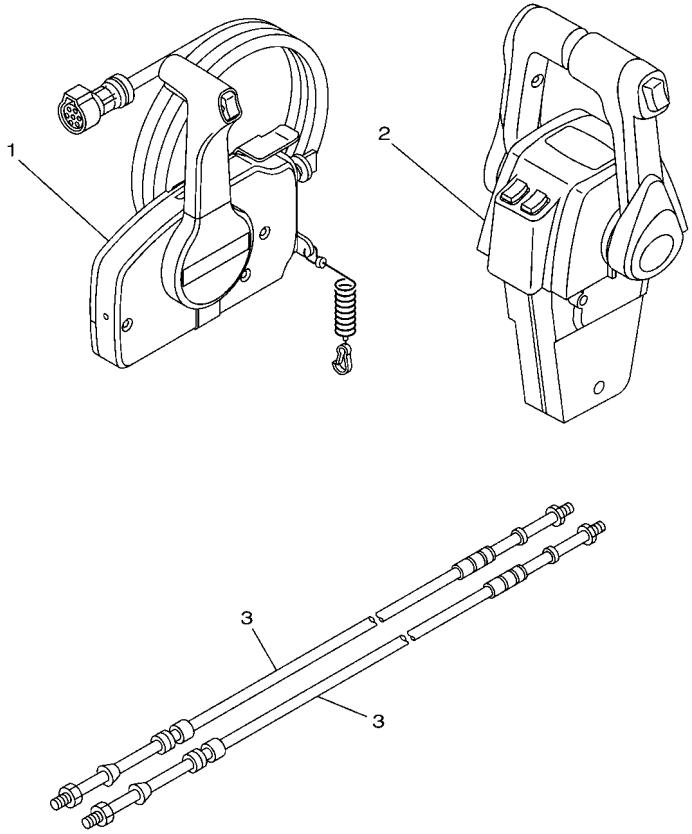

6G4J200-R280

REF. NO.	PART NO. CODIGO Nº	DESCRIPTION DESCRIPCION	6G4J	60HJ	6K0J	60JJ		REMARKS OBSERVACIONES
1	703–48205–22	REMOTE CONTROL ASSY (10P, PTT) REMOTO CONTROL COMPL. (10P)	1	1				AP WITH PT/T SW. AP WITH PT/T SW.
2	704–48207–R0	REMOTE CONTROL ASSY REMOTO CONTROL COMPL.			1	1		AP WITH PT/T SW. AP WITH PT/T SW.
3	701–48320–80	CABLE, REMOTE CONTROL L=17F CABLE CONTROL REMOTO L=17F	2	2	2	2		UR UR
	701–48320–40	CABLE, REMOTE CONTROL L=19F CABLE CONTROL REMOTO L=19F	2	2	2	2		UR UR
	701–48320–70	CABLE, REMOTE CONTROL L=20F CABLE CONTROL REMOTO L=20F	2	2	2	2		UR UR
	701–48350–10	CABLE, REMOTE CONTROL L=22F CABLE CONTROL REMOTO L=22F	2	2	2	2		UR UR
	701–48350–50	CABLE, REMOTE CONTROL L=26F CABLE CONTROL REMOTO L=26F	2	2	2	2		UR UR

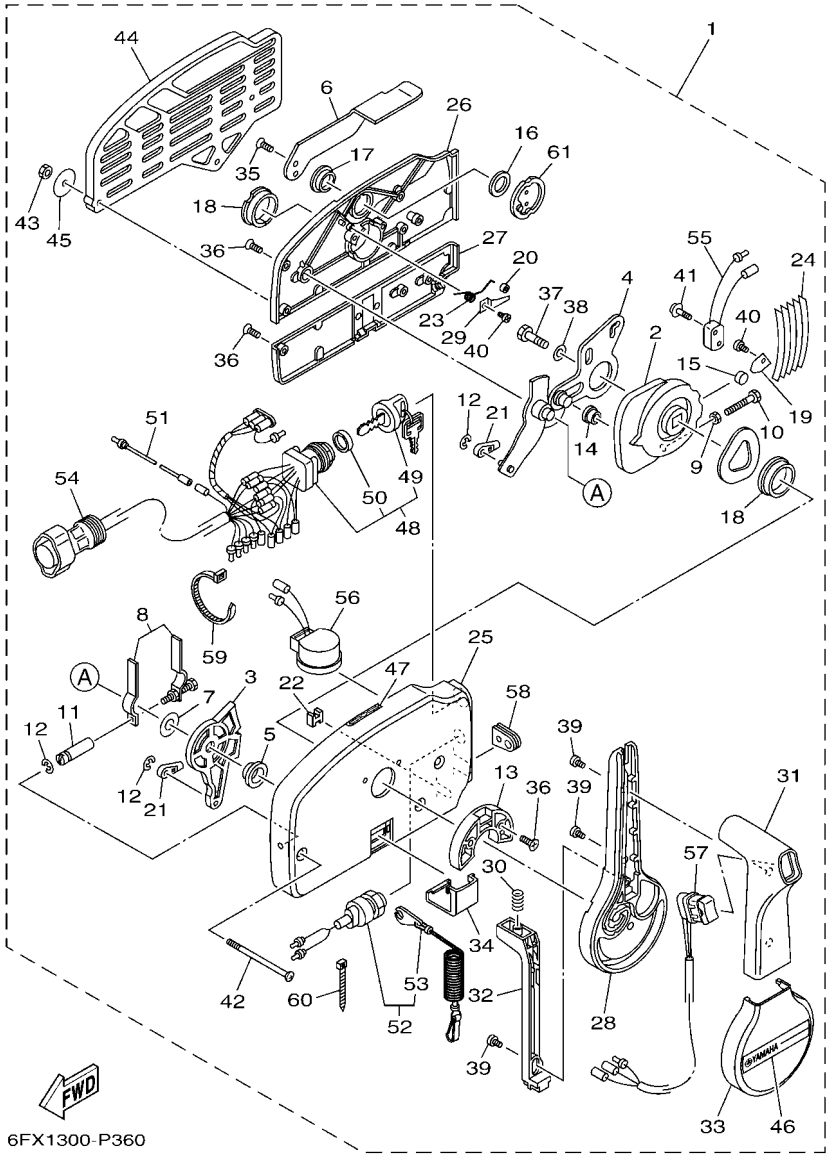

FIG. 29 REMOTE CONTROL ASSY 1 — CONTROL REMOTO COMPL 1

REF. NO.	PART NO. CODIGO Nº	DESCRIPTION DESCRIPCION	6G4J	60HJ	6K0J	60JJ		REMARKS OBSERVACIONES
1	703–48205–22	REMOTE CONTROL ASSY (10P, PTT) REMOTO CONTROL COMPL. (10P)	1	1				AP WITH PT/T SW. AP WITH PT/T SW.
2	703–48232–00	.GEAR .ENGRANAJE 1	1	1				
3	703–48271–00	.ARM, SHIFT .BRAZO CAMBIADOR	1	1				
4	703–48261–01	.ARM, THROTTLE .BRAZO ACELERADOR	1	1				
5	703–48235–00	.BUSHING .BUJE	1	1				
6	703–48152–10	.KNOB, FREE ACCEL. .PERILLA	1	1				
7	703–48268–00	.SPACER .ESPACIADOR 3	1	1				
8	703–48264–00	.FRICTION, THROTTLE .FRICCION DE ACELERADOR	1	1				
9	95380–05600	.NUT .TUERCA	1	1				
10	97380–05025	.BOLT .TORNILLO HEXAGONAL	1	1				
11	703–48265–10	.SHAFT, FRICTION .EJE FRICCION	1	1				
12	93430–06024	.CIRCLIP .SEGURO	3	3				
13	703–48245–00	.PLATE, LOCK .PLACA CERRADURA	1	1				
14	703–48252–00	.ROLLER, CAM .RODILLO LEVA	1	1				
15	701–48248–00	.ROLLER, FREE ACCEL. .RODILLO ACELERADOR LIBRE	1	1				
16	703–48198–00	.WASHER, WAVE .RONDANA ONDULADA 3	1	1				
17	703–48243–00	.BUSHING .BUJE 3	1	1				
18	703–48236–00	.BUSHING 1 .BUJE	2	2				
19	703–48189–00	.RETAINER .RETENEDOR	1	1				
20	703–48234–00	.ROLLER, DETENT .RODILLO	1	1				
21	703–48345–01	.CABLE END, REMOTE CONTROL 2 .TERMINAL CABLE DE CONTROL REMO	2	2				
22	703–48358–00	.ANCHOR, CABLE .ABRAZADERA CABLE	1	1				
23	703–48244–00	.SPRING, FREE ACCEL. .RESORTE ACELERADOR LIBRE	1	1				
24	703–48238–00	.SPRING, DETENT .RESORTE	5	5				
25	703–48211–10	.HOUSING,1 .CAJA	1	1				
26	703–48212–10	.BACK PLATE 1 .PLACA TRASERA 1	1	1				
27	703–48213–10	.BACK PLATE 2 .PLACA TRASERA 2	1	1				

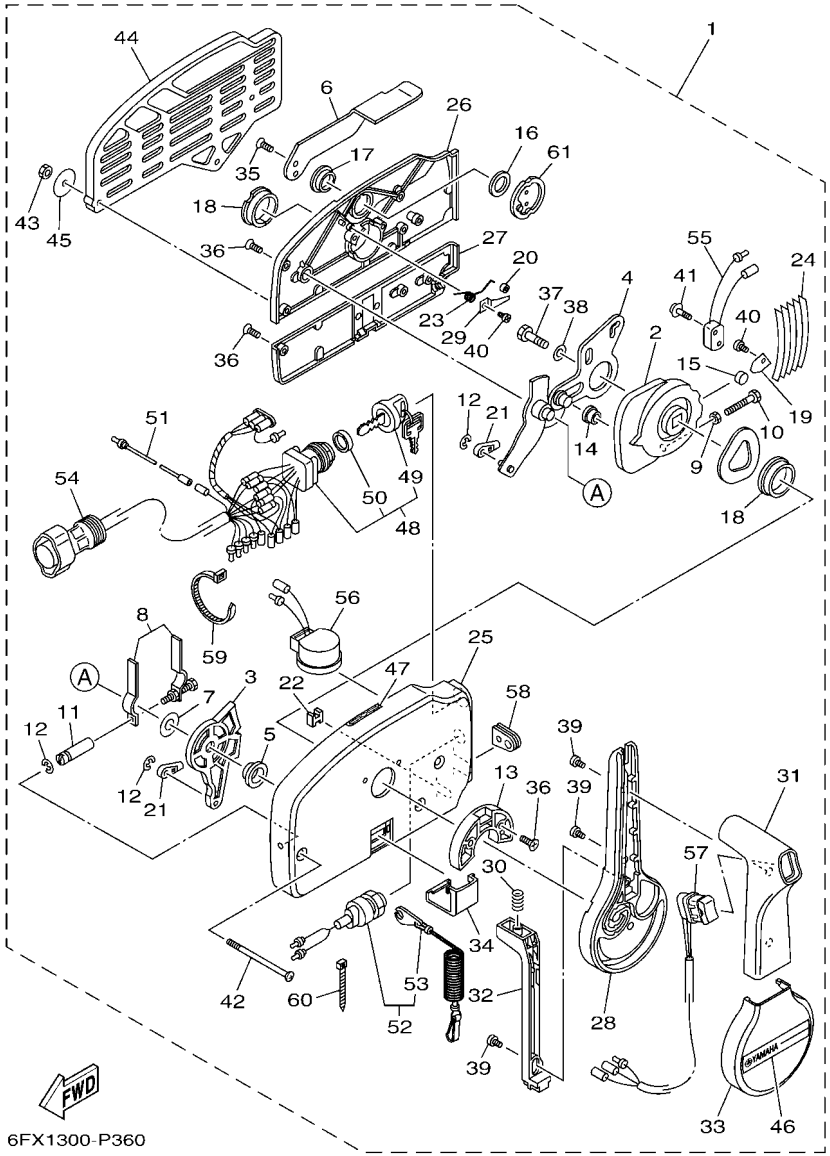

FIG. 29 REMOTE CONTROL ASSY 1 — CONTROL REMOTO COMPL 1

REF. NO.	PART NO. CODIGO Nº	DESCRIPTION DESCRIPCION	6G4J	60HJ	6K0J	60JJ		REMARKS OBSERVACIONES
28	703–48221–10	.LEVER, CONTROL .PALANCA CONTROL	1	1				
29	703–48246–00	.SPACER .ESPACIADOR	1	1				
30	703–48227–00	.SPRING, NEUTRAL LOCK .RESORTE DE SEGURO	1	1				
31	703–48222–20	.GRIP, CONTROL LEVER .MANGO DE PALANCA CONTROL	1	1				SINGLE SINGLE
32	703–48223–10	.LOCK, NEUTRAL .CERRADURA NEUTRO	1	1				
33	703–48225–10	.COVER .CUBIERTA	1	1				
34	703–48219–10	.COVER, LEAD .CUBIERTA	1	1				
35	703–48281–00	.SCREW .TORNILLO 1	2	2				
36	703–44189–20	.SCREW .TORNILLO	7	7				
37	97380–08030	.BOLT .TORNILLO HEXAGONAL	1	1				
38	92990–08600	.WASHER, PLATE .ARANDELA PLANA	1	1				
39	703–48128–10	.SCREW 2 .TORNILLO 2	3	3				
40	98580–04006	.SCREW, PAN HEAD .TORNILLO DE CABEZA CRUZADA	2	2				
41	703–48129–00	.SCREW 3 .TORNILLO 3	2	2				
42	703–44189–30	.SCREW .TORNILLO	3	3				
43	95380–06600	.NUT, HEXAGON .TUERCA	3	3				
44	703–48293–10	.SPACER, REMOTE CONTROL .ESPACIADOR	1	1				SINGLE SINGLE
45	701–48287–00	.WASHER .ARANDELA	3	3				
46	703–48215–10	.GRAPHIC .CALCOMANIA 1	1	1				
47	6X3–44191–00	.INDICATOR, SHIFT .INDICADOR DE CAMBIOS	1	1				
48	703–82510–44	.MAIN SWITCH ASSY .CONJUNTO DE LLAVE IGNICION	1	1				
49	703–82577–00	..CAP, KEY ..TAPA	1	1				
50	6K1–82532–00	..CAP ..TAPA	1	1				
51	703–82531–00	.WIRE, LEAD (L70) .CABLE CONDUCTOR (L70)	1	1				
52	688–82575–02	.ENGINE STOP SWITCH ASSY .INTERRUPTOR DE PARADA COMPL	1	1				
53	682–82556–00	..LANYARD, STOP SWITCH ..CORDON DE INTERRUPTOR PARADA	1	1				
54	688–8258A–20	.EXTENSION, WIRE HARNESS (4.9M) .EXTENSION, ARNES DE CABLES (4.	1	1				(10P) (10P)

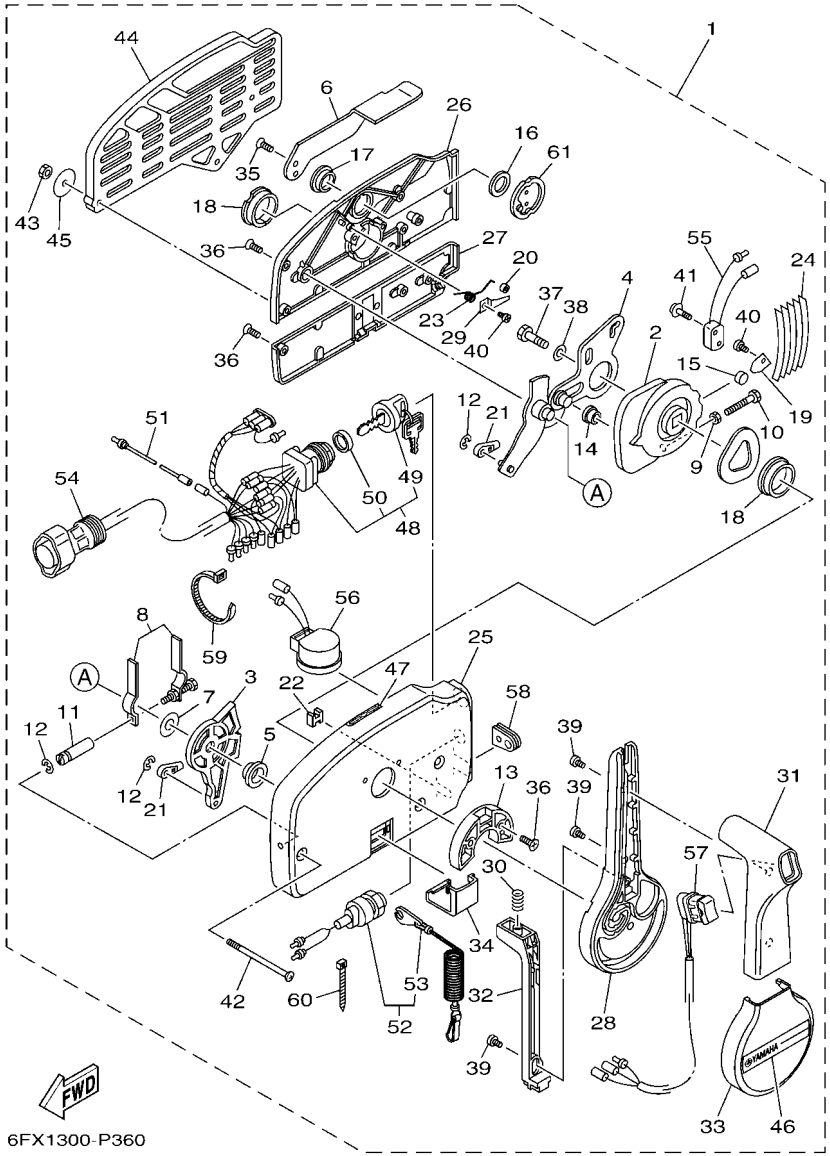

FIG. 29 REMOTE CONTROL ASSY 1 — CONTROL REMOTO COMPL 1

REF. NO.	PART NO. CODIGO Nº	DESCRIPTION DESCRIPCION	6G4J	60HJ	6K0J	60JJ		REMARKS OBSERVACIONES
55	703–82540–00	.NEUTRAL SWITCH ASSY .INTERRUPTOR NEUTRAL COMPL	1	1				
56	703–83383–11	.BUZZER .ZUMBADOR	1	1				
57	703–82563–31	.TRIM & TILT SWITCH ASSY .INTERRUPTOR DE INCLINACION	1	1				
58	703–48284–00	.GROMMET .TAPON	1	1				
59	703–82591–00	.BAND .BANDA	1	1				
60	703–82592–00	.BAND .BANDA	1	1				
61	703–48153–00	.SHAFT, FREE ACCEL. .EJE	1	1				

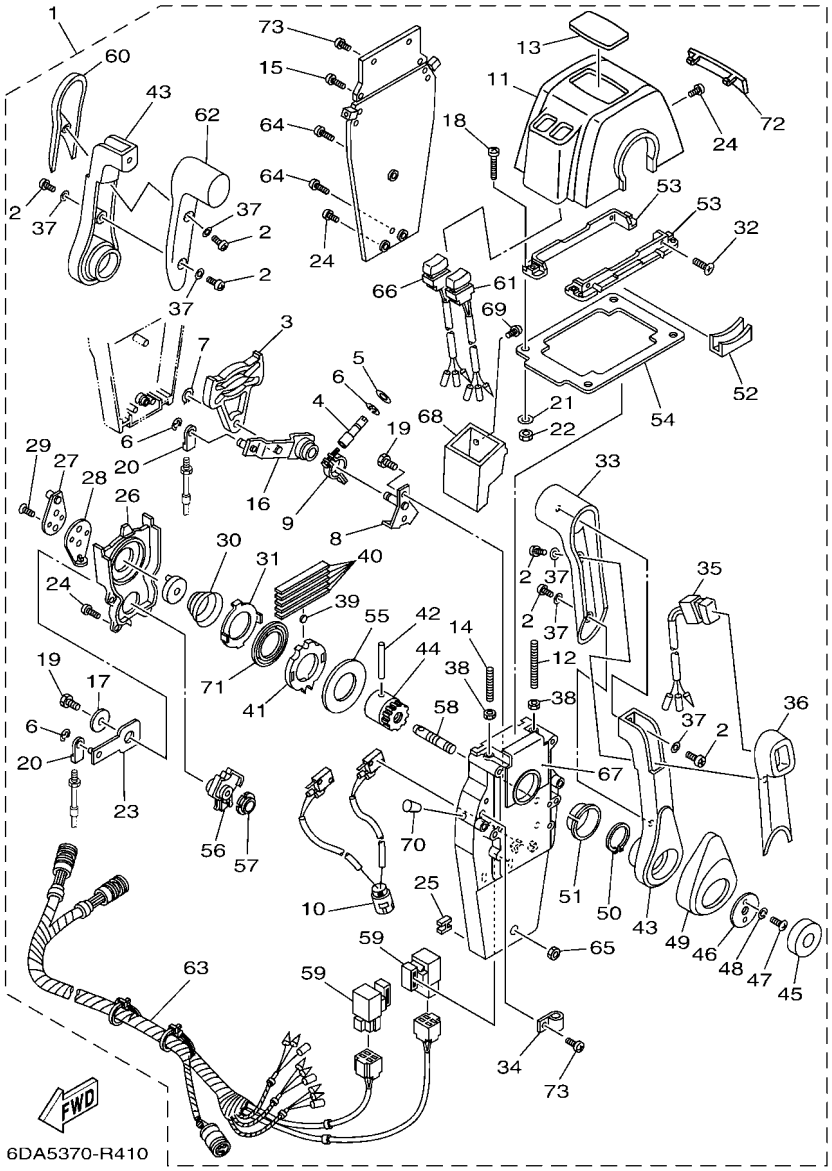

FIG. 30 REMOTE CONTROL ASSY 2 — CONTROL REMOTO COMPL 2

REF. NO.	PART NO. CODIGO Nº	DESCRIPTION DESCRIPCION	6G4J	60HJ	6K0J	60JJ		REMARKS OBSERVACIONES
1	704–48207–R0	REMOTE CONTROL ASSY REMOTO CONTROL COMPL.			1	1		AP WITH PT/T SW. AP WITH PT/T SW.
2	704–48129–10	.SCREW 3 .TORNILLO 3			6	6		
3	EL8–48251–00	.PLATE, CAM .PLACA,LEVA			2	2		
4	704–48265–00	.SHAFT, FRICTION .EJE FRICCION			2	2		
5	701–48246–00	.SPACER .ESPACIADOR			2	2		
6	93430–06024	.CIRCLIP .SEGURO			8	8		
7	EL8–48259–00	.CIRCLIP 1 .SEGURO			2	2		
8	704–48262–00	.SHAFT, THROTTLE .EJE DE ACELERADOR			2	2		
9	704–48264–00	.THROTTLE, FRICTION .FRICCION DE ACELERADOR			2	2		
10	704–82540–30	.NEUTRAL SWITCH ASSY .INTERRUPTOR NEUTRAL COMPL			1	1		
11	704–48119–60	.COVER .CUBIERTA			1	1		
12	EL8–48281–00	.SCREW .TORNILLO 1			2	2		
13	704–48215–70	.GRAPHIC .CALCOMANIA 1			1	1		
14	704–48281–00	.SCREW .TORNILLO 1			2	2		
15	97890–05025	.SCREW, PAN HEAD .TORNILLO			4	4		
16	704–48261–00	.ARM, THROTTLE .BRAZO ACELERADOR			2	2		
17	EL8–48191–00	.WASHER 1 .ARANDELA			2	2		
18	704–48283–00	.SCREW .TORNILLO 3			4	4		
19	97380–06018	.BOLT .TORNILLO HEXAGONAL			6	6		
20	703–48345–01	.CABLE END, REMOTE CONTROL 2 .TERMINAL CABLE DE CONTROL REMO			4	4		
21	704–48287–00	.WASHER .ARANDELA			4	4		
22	95380–05600	.NUT .TUERCA			4	4		
23	704–48271–00	.ARM, SHIFT .BRAZO CAMBIADOR			2	2		
24	EL8–48127–00	.SCREW 1 .TORNILLO 1			18	18		
25	703–48358–00	.ANCHOR, CABLE .ABRAZADERA CABLE			2	2		
26	704–48231–00	.HOUSING, GEAR .CAJA,ENGRANAJE			2	2		
27	EL8–48241–00	.ARM, DRIVE .BRAZO,MANDO			2	2		

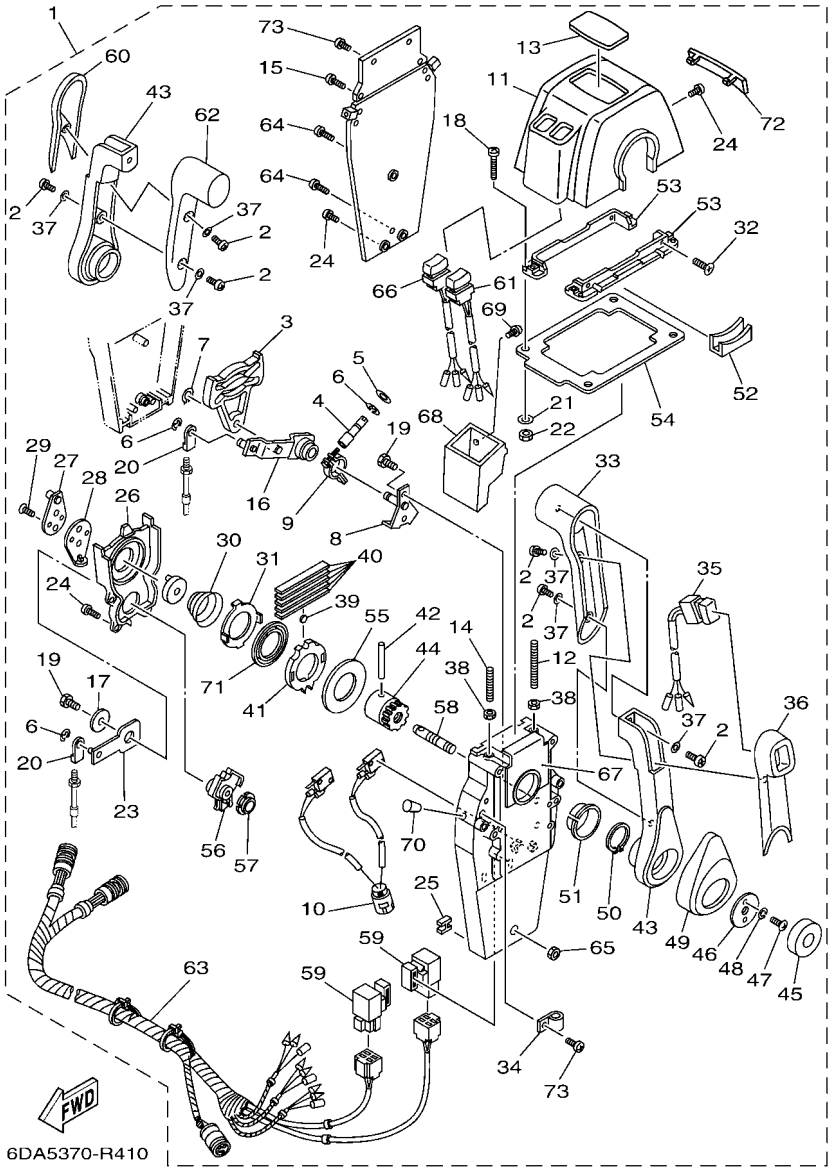

FIG. 30 REMOTE CONTROL ASSY 2 — CONTROL REMOTO COMPL 2

REF. NO.	PART NO. CODIGO Nº	DESCRIPTION DESCRIPCION	6G4J	60HJ	6K0J	60JJ		REMARKS OBSERVACIONES
28	EL8–48254–00	.STOPPER, THROTTLE ADJUSTING .TAPON			2	2		
29	92780–06020	.SCREW, FLAT HEAD .TORNILLO CABEZA PLANA			4	4		
30	EL8–48244–00	.SPRING, FREE ACCEL. .RESORTE ACELERADOR LIBRE			2	2		
31	EL8–48245–00	.PLATE, LOCK .PLACA CERRADURA			2	2		
32	98780–05018	.SCREW, FLAT HEAD .TORNILLO CABEZA PLANA			4	4		
33	704–48222–30	.GRIP, CONTROL LEVER .MANGO DE PALANCA CONTROL			2	2		
34	704–82594–00	.CLAMP .GRAMPA			1	1		
35	704–82563–70	.TRIM & TILT SWITCH ASSY .INTERRUPTOR DE INCLINACION			1	1		
36	704–48229–10	.GRIP, CONTROL LEVER .MANGO DE PALANCA CONTROL 2			1	1		
37	92990–05300	.WASHER, INTERNAL TOOTH .ARANDELA PLANA			6	6		
38	95380–06600	.NUT, HEXAGON .TUERCA			4	4		
39	701–48248–00	.ROLLER, FREE ACCEL. .RODILLO ACELERADOR LIBRE			2	2		
40	704–48238–00	.SPRING, DETENT .RESORTE			10	10		
41	704–48232–P1	.GEAR .ENGRANAJE 1			2	2		
42	EL8–48164–00	.PIN 2 .PASADOR 2			2	2		
43	704–48221–R0	.LEVER, CONTROL .PALANCA CONTROL			2	2		
44	704–48242–10	.SHAFT, DRIVE .EJE, PROPULSION			2	2		
45	704–48225–R0	.COVER .CUBIERTA			2	2		
46	704–48192–00	.WASHER 2 .RONDANA 2			2	2		
47	97890–06018	.SCREW, PAN HEAD .TORNILLO			4	4		
48	92990–06300	.WASHER, INTERNAL TOOTH .ARANDELA PLANA			4	4		
49	704–48224–R0	.COVER, CONTROL LEVER .CUBIERTA DE PALANCA CONTROL			2	2		
50	EL8–48279–00	.CIRCLIP 2 .SEGURO2			2	2		
51	704–48234–00	.BUSHING 1 .BUJE			2	2		
52	704–48219–R0	.COVER, LEAD .CUBIERTA			2	2		
53	704–48144–20	.PLATE, STOPPER 2 .PLACA, RETEN 2			2	2		
54	704–48176–10	.GROMMET .TOPON			1	1		

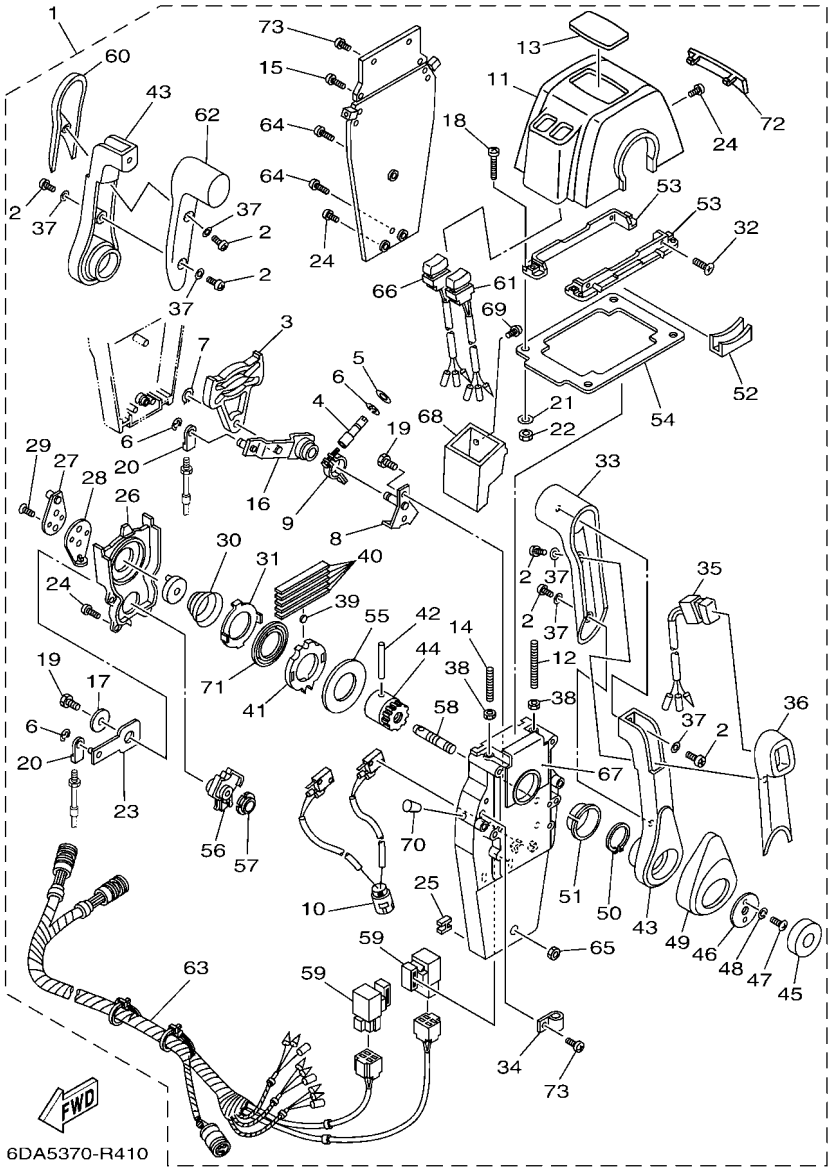

FIG. 30 REMOTE CONTROL ASSY 2 — CONTROL REMOTO COMPL 2

REF. NO.	PART NO. CODIGO Nº	DESCRIPTION DESCRIPCION	6G4J	60HJ	6K0J	60JJ		REMARKS OBSERVACIONES
55	704–48192–P0	.WASHER 2 .RONDANA 2			2	2		
56	704–48233–00	.GEAR 2 .ENGRANAJE 2			2	2		
57	704–48235–00	.BUSHING .BUJE			2	2		
58	704–48153–00	.SHAFT, FREE ACCEL. .EJE			2	2		
59	704–81950–10	.RELAY ASSY .RELE COMPLETO			2	2		
60	704–48229–20	.GRIP, CONTROL LEVER .MANGO DE PALANCA CONTROL 2			1	1		
61	704–82563–80	.TRIM & TILT SWITCH ASSY .INTERRUPTOR DE INCLINACION			1	1		
62	704–48222–20	.GRIP, CONTROL LEVER .MANGO DE PALANCA CONTROL			1	1		
63	704–82590–10	.WIRE HARNESS ASSY .CONJUNTO DE CABLES			1	1		
64	704–48128–00	.SCREW 2 .TORNILLO 2			3	3		
65	704–48156–00	.NUT 1 .TUERCA 1			1	1		
66	704–82563–90	.TRIM & TILT SWITCH ASSY .INTERRUPTOR DE INCLINACION			1	1		
67	704–48284–P0	.GROMMET .TAPON			2	2		
68	704–48285–20	.GROMMET 2 .TAPON 2			1	1		
69	704–48129–60	.SCREW 3 .TORNILLO 3			2	2		
70	704–48166–00	.PLUG .TAPON			2	2		
71	704–48178–00	.PLATE, SHIFT .PLACA			2	2		
72	704–48167–30	.PLUG .TAPON AGUJERO			1	1		
73	97890–05016	.SCREW, PAN HEAD .TORNILLO			5	5		

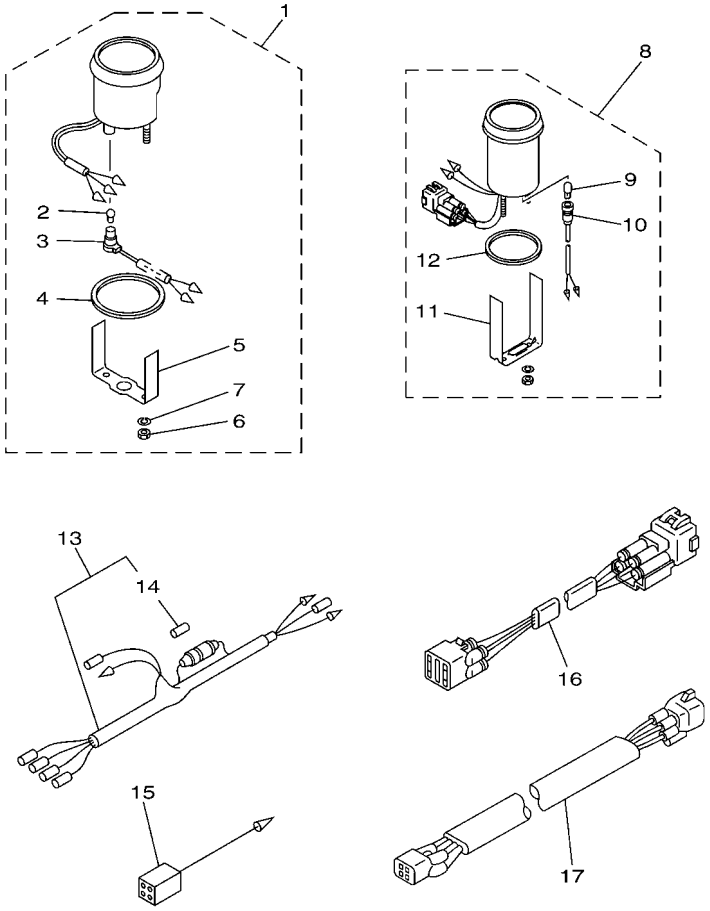

6G58200-G310

FIG. 31 METER — MEDIDOR

REF. NO.	PART NO. CODIGO Nº	DESCRIPTION DESCRIPCION	6G4J	60HJ	6K0J	60JJ		REMARKS OBSERVACIONES
1	6Y7–83540–20	TACHOMETER ASSY TACOMETRO COMPLETO	1	1	1	1		AP WITHOUT OIL LAMP AP WITHOUT OIL LAMP
2	6Y5–83517–00	.BULB (T10, 12V-1.7W) .BOMBILLA (T10, 12V-1.7W)	1	1	1	1		
3	6Y5–83536–40	.SOCKET, METER .ENCASTRE DE MEDIDOR	1	1	1	1		
4	6Y5–83523–00	.DAMPER .AMORTIGUADOR	1	1	1	1		
5	6Y5–83514–00	.PLATE, FITTING .PLACA ACCESORIA	1	1	1	1		
6	95380–05600	.NUT .TUERCA	2	2	2	2		
7	92990–05100	.WASHER, SPRING .ARANDELA PLANA	2	2	2	2		
8	6Y7–83670–00	TRIM METER ASSY. MEDIDOR DE INCLINACION	1	1	1	1		AP AP
9	6Y5–83518–00	.BULB (12V-1.7W T6.5) .BOMBILLA (12V-1.7W T6.5)	1	1	1	1		
10	6Y5–83536–00	.SOCKET, METER .ENCASTRE DE MEDIDOR	1	1	1	1		
11	6Y5–83544–00	.PLATE, FITTING .PLACA ACCESORIA	1	1	1	1		
12	688–83664–00	.DAMPER .AMORTIGUADOR	1	1	1	1		
13	6Y5–83553–00	WIRE, LEAD (L=2.5M) CABLE CONDUCTOR (L=2.5M)	1	1	1	1		AP AP
14	1E6–82151–00	.FUSE (10A) .FUSIBLE (10A)	1	1	1	1		
15	6Y5–82117–00	WIRE, LEAD (BLACK) (L300) CABLE, CONDUCTOR (NEGRO)	1	1	1	1		AP AP
16	6R3–82553–70	EXTENSION, WIRE LEAD (L=7.0M) CABLE (L=7.0M)	1	1				AP (4P) AP (4P)
	6R3–82553–80	EXTENSION, WIRE LEAD (L=8.0M) CABLE (L=8.0M)			1	1		AP (4P) AP (4P)
17	6R3–82553–30	EXTENSION, WIRE LEAD (L=3.0M) CABLE (L=3.0M)			1	1		AP (4P) AP (4P)

FIG. 32 SWITCH & PANEL — PANEL DE INTERRUPTOR

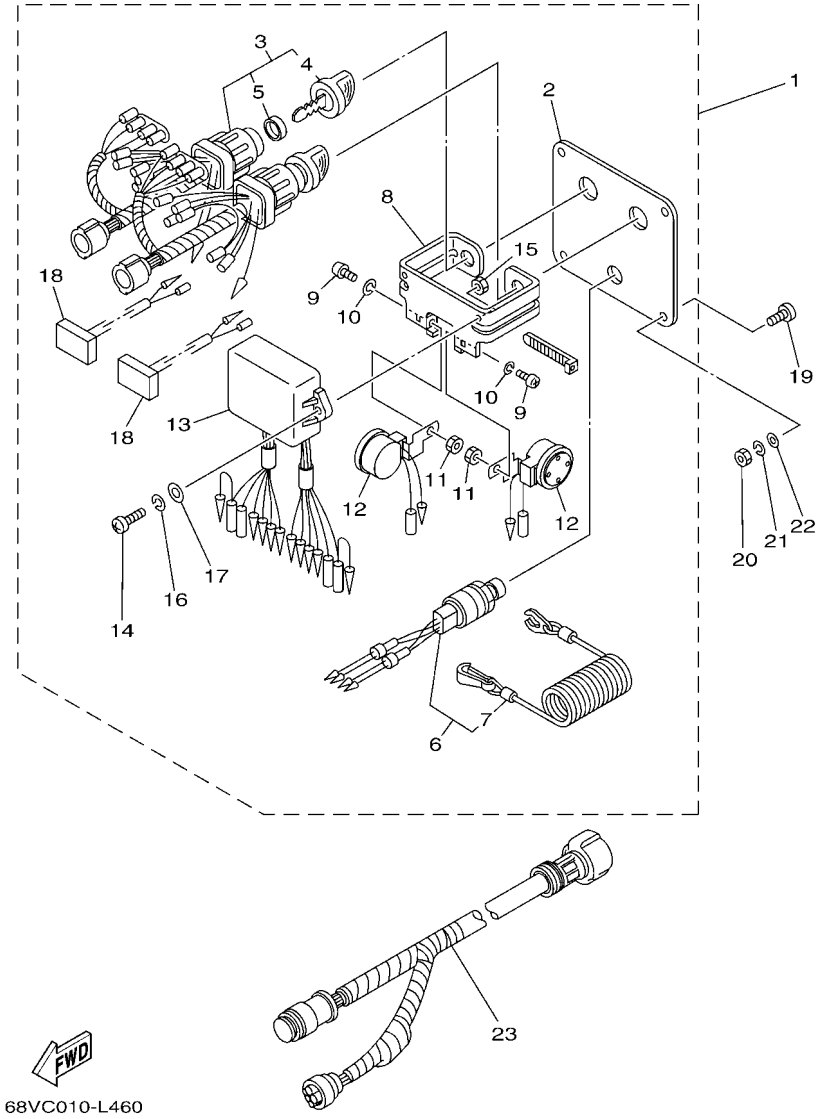

REF. NO.	PART NO. CODIGO Nº	DESCRIPTION DESCRIPCION	6G4J	60HJ	6K0J	60JJ		REMARKS OBSERVACIONES
1	6K1–82570–13	PANEL SWITCH ASSY INTERRUPTOR DE PANEL COMPL.			1	1		AP AP
2	6K1–82571–02	.PLATE, PANEL SWITCH .PANEL DE INTERRUPTOR			1	1		
3	6K1–82510–07	.MAIN SWITCH ASSY .CONJUNTO DE LLAVE IGNICION			2	2		
4	703–82577–00	..CAP, KEY ..TAPA			1	1		
5	6K1–82532–00	..CAP ..TAPA			1	1		
6	6K1–82575–01	.ENGINE STOP SWITCH ASSY .INTERRUPTOR DE PARADA COMPL			1	1		
7	682–82556–00	..LANYARD, STOP SWITCH ..CORDON DE INTERRUPTOR PARADA			1	1		
8	6K1–83614–01	.BRACKET .SOPORTE			1	1		
9	98980–05010	.SCREW, BIND .TORNILLO DE LIGAR			2	2		
10	92990–05100	.WASHER, SPRING .ARANDELA PLANA			2	2		
11	95380–05600	.NUT .TUERCA			2	2		
12	688–83383–12	.BUZZER .ZUMBADOR			2	2		
13	6K1–85830–02	.CONTROL UNIT ASSY .UNIDAD CONTROL			1	1		
14	98980–06020	.SCREW, BIND .TORNILLO DE LIGAR			2	2		
15	95380–06600	.NUT, HEXAGON .TUERCA			2	2		
16	92990–06100	.WASHER, SPRING .ARANDELA PLANA			2	2		
17	92990–06600	.WASHER, PLATE .ARANDELA PLANA			2	2		
18	6K1–81980–00	.DIODE ASSY .CONJUNTO DIODO			2	2		
19	90149–05M05	SCREW TORNILLO DE REGLAJE			4	4		AP AP
20	95380–05600	NUT TUERCA			4	4		AP AP
21	92990–05100	WASHER, SPRING ARANDELA PLANA			4	4		AP AP
22	92990–05600	WASHER, PLATE ARANDELA PLANA			4	4		AP AP
23	6K1–8258A–40	EXTENSION, WIRE HARNESS (8M) EXTENSION, ARNES DE CABLES (8M			2	2		AP (10P) AP (10P)

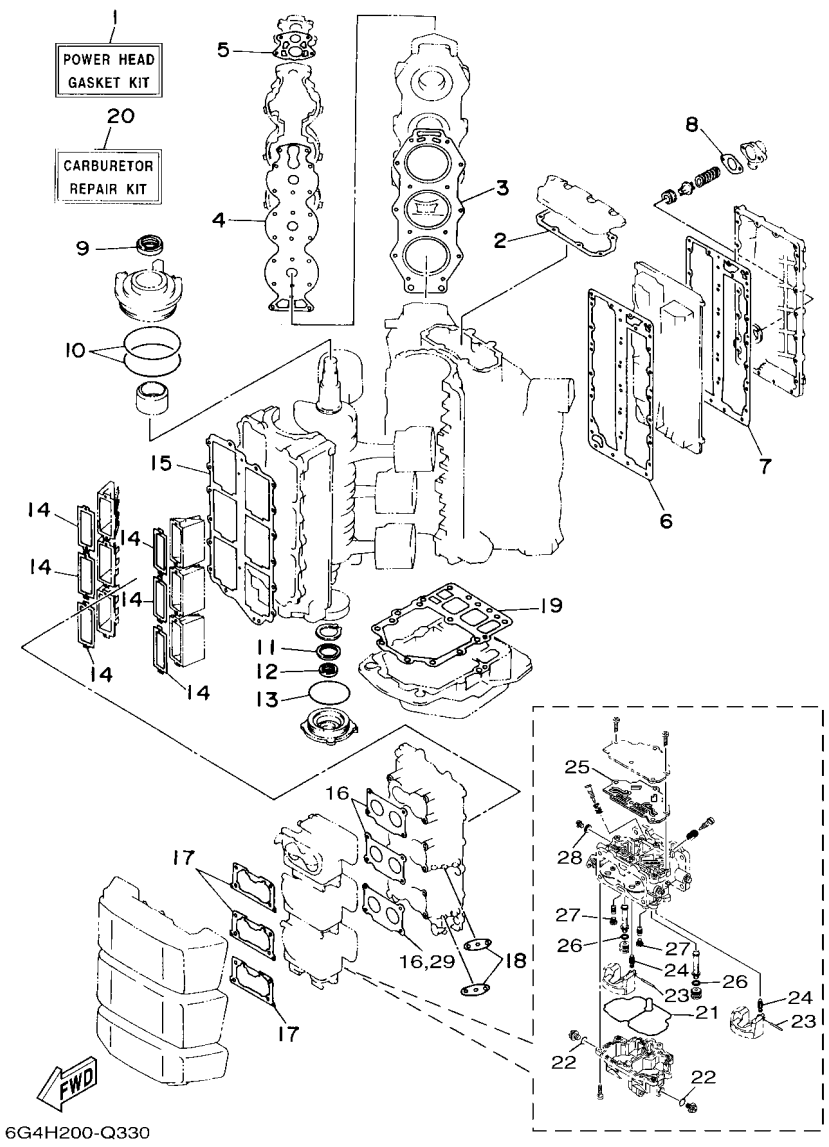

FIG. 33 REPAIR KIT 1 — ESTUCHE REPARATION 1

REF. NO.	PART NO. CODIGO Nº	DESCRIPTION DESCRIPCION	6G4J	60HJ	6K0J	60JJ		REMARKS OBSERVACIONES
1	6G5–W0001–11	POWER HEAD GASKET KIT JUEGO DE EMPAQUE	1	1	1	1		
2	6E5–11381–A2	.GASKET 1 .EMPAQUE 1	1	1	1	1		
3	6G5–11181–A3	.GASKET, CYLINDER HEAD 1 .JUNTA, DE CULATA 1	2	2	2	2		
4	6G5–11193–A2	.GASKET, HEAD COVER 1 .EMPAQUE	2	2	2	2		
5	688–12414–A1	.GASKET, COVER .EMPAQUE	2	2	2	2		
6	6G5–41112–A1	.GASKET, EXHAUST INNER COVER .EMPAQUE	1	1	1	1		
7	6G5–41114–A0	.GASKET, EXHAUST OUTER COVER .EMPAQUE	1	1	1	1		
8	6G5–11382–A1	.GASKET 2 .EMPAQUE 2	1	1	1	1		
9	93102–40M14	.OIL SEAL .SELLO ACEITE	1	1	1	1		
10	93211–04001	.O-RING .ANILLO O	2	2	2	2		
11	93102–35M61	.OIL SEAL .SELLO ACEITE	1	1	1	1		
12	93101–22M15	.OIL SEAL .SELLO ACEITE	1	1	1	1		
13	93210–74M35	.O-RING .ANILLO O	1	1	1	1		
14	6E5–13621–A1	.GASKET, VALVE SEAT .JUNTA, DE VALV.DE EMPAQUE	6	6	6	6		
15	6G5–13645–A2	.GASKET, MANIFOLD 1 .EMPAQUE	1	1	1	1		
16	6E5–14198–A2	.GASKET .EMPAQUE	3	3	3	3		
17	6K7–14483–00	.GASKET .EMPAQUE	3	3	3	3		
18	650–24431–A0	.GASKET, FUEL PUMP 1 .EMPAQUE BOMBA COMBUST 1	2	2	2	2		
19	68F–45113–01	.GASKET, UPPER CASING .EMPAQUE	1	1	1	1		
20	60H–W0093–00	CARBURETOR REPAIR KIT KIT REPARACION CARBURADOR	1	1	1	1		
21	60H–14384–00	.GASKET, FLOAT CHAMBER .EMPAQUE DE CAMARA DE BOIA	1	1	1	1		
22	652–14397–00	.O-RING .ANILLO O	2	2	2	2		
23	60H–14386–00	.PIN, FLOAT .PASADOR DE BOIA	2	2	2	2		
24	6C5–14546–10	.VALVE, NEEDLE .VALVULA DE AGUJA	2	2	2	2		
25	60H–14536–00	.GASKET .EMPAQUE	1	1	1	1		
26	62Y–14227–00	.O-RING .ANILLO O	2	2	2	2		
27	66M–14355–00	.PLUG .TAPON	3	3	3	3		

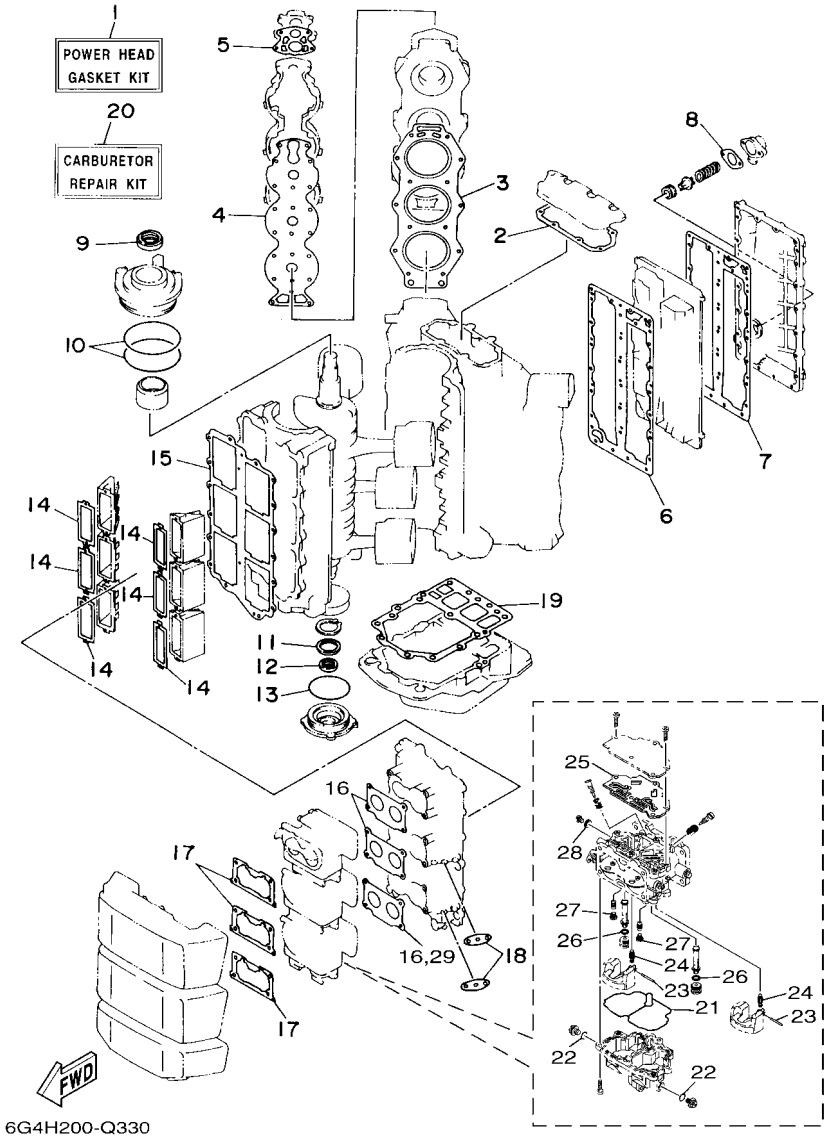

FIG. 33 REPAIR KIT 1 — ESTUCHE REPARATION 1

REF. NO.	PART NO. CODIGO Nº	DESCRIPTION DESCRIPCION	6G4J	60HJ	6K0J	60JJ		REMARKS OBSERVACIONES
28	60H–14198–00	.GASKET .EMPAQUE	1	1	1	1		
29	6E5–14198–A2	.GASKET .EMPAQUE	1	1	1	1		

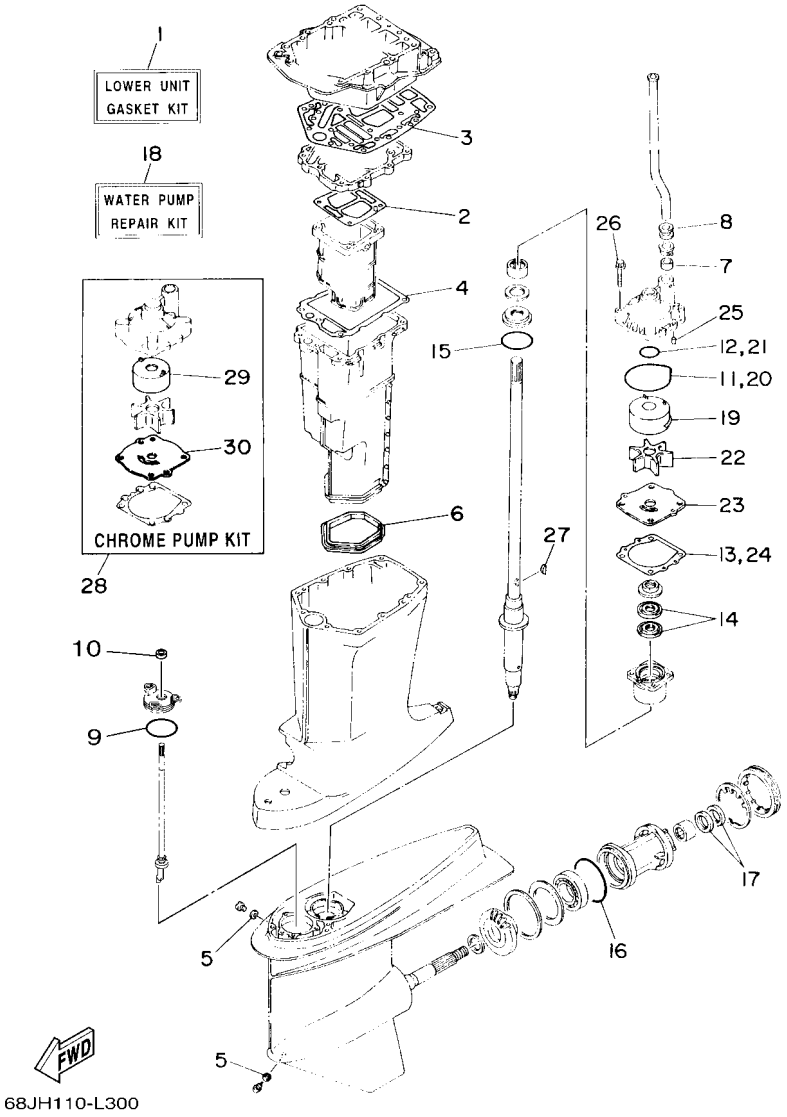

FIG. 34 REPAIR KIT 2 — ESTUCHE REPARATION 2

REF. NO.	PART NO. CODIGO Nº	DESCRIPTION DESCRIPCION	6G4J	60HJ	6K0J	60JJ		REMARKS OBSERVACIONES
1	6G5–W0001–C1	LOWER UNIT GASKET KIT JUEGO DE EMPAQUE UNIDAD INFER	1	1	1	1		
2	6G5–41134–A1	.GASKET, EXHAUST MANIFOLD .EMPAQUE	1	1	1	1		
3	6G5–45114–A1	.GASKET, UPPER CASING .EMPAQUE	1	1	1	1		
4	6E5–41135–A0	.GASKET, EXHAUST MANIFOLD .EMPAQUE	1	1	1	1		
5	90430–08003	.GASKET .JUNTA	2	2	2	2		
6	6E5–45123–00	.GASKET, MUFFLER .EMPAQUE SILENCIADOR	1	1	1	1		
7	6E5–44365–00	.DAMPER, WATER SEAL 1 .HULE DE SELLO DE AGUA 1	1	1	1	1		
8	6E5–44366–00	.DAMPER, WATER SEAL 2 .GOMA DEL SELLO DE AGUA 2	1	1	1	1		
9	93210–58144	.O-RING .ANILLO O	1	1	1	1		
10	93106–09014	.OIL SEAL .SELLO ACEITE	1	1	1	1		
11	93210–86M38	.O-RING .ANILLO O	1	1	1	1		
12	93210–37160	.O-RING .ANILLO O	1	1	1	1		
13	6E5–44315–A0	.GASKET, WATER PUMP .EMPAQUE	1	1	1	1		
14	93101–28M16	.OIL SEAL .SELLO ACEITE	2	2	2	2		
15	93210–55M14	.O-RING .ANILLO O	1	1	1	1		
16	93210–97M55	.O-RING .ANILLO O	1	1	1	1		
17	93101–30M17	.OIL SEAL .SELLO ACEITE	2	2	2	2		
18	61A–W0078–A3	WATER PUMP REPAIR KIT ESTUCHE REPARACION BOMBA AGUA	1	1	1	1		
19	61A–44322–02	.INSERT, CARTRIDGE .CARTUCHO	1	1	1	1		
20	93210–86M38	.O-RING .ANILLO O	1	1	1	1		
21	93210–37160	.O-RING .ANILLO O	1	1	1	1		
22	6E5–44352–01	.IMPELLER .IMPULSOR	1	1	1	1		
23	6G5–44323–01	.OUTER PLATE, CARTRIDGE .PLACA EXTERIOR DEL CARTUCHO	1	1	1	1		
24	6E5–44315–A0	.GASKET, WATER PUMP .EMPAQUE	1	1	1	1		
25	93606–12019	.PIN, DOWEL .PASADOR DE CLAVIJA	2	2	2	2		
26	90119–08M14	.BOLT, WITH WASHER .TORNILLO CON ARANDELA	4	4	4	4		
27	90280–04M05	.KEY, WOODRUFF .CUNA WOODRUFF	1	1	1	1		

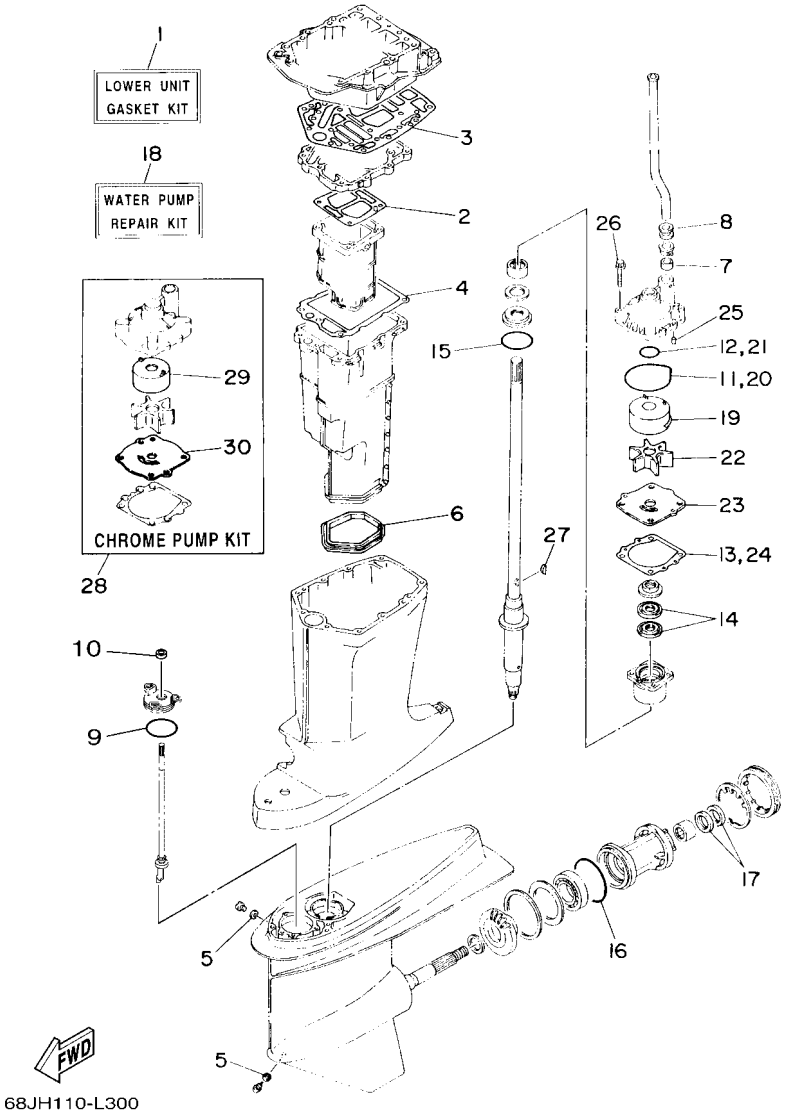

FIG. 34 REPAIR KIT 2 — ESTUCHE REPARATION 2

REF. NO.	PART NO. CODIGO Nº	DESCRIPTION DESCRIPCION	6G4J	60HJ	6K0J	60JJ		REMARKS OBSERVACIONES
28	61A–W0078–2A	CHROME PUMP KIT ESTUCHE REPARACION BOMBA AGUA	1	1	1	1		
29	6R3–44322–42	.INSERT, CARTRIDGE .CARTUCHO	1	1	1	1		
30	6G5–44323–41	.OUTER PLATE, CARTRIDGE .PLACA EXTERIOR DEL CARTUCHO	1	1	1	1		

NUMERICAL INDEX
INDICE NUMERICO

PART NO. CODIGO Nº	REF. NO.
6G5–11111–04–1S	5 – 1
6E5–11119–01	3 – 14
6G5–11181–A3	5 – 2
	33 – 3
6G5–11191–00–1S	5 – 4
6G5–11193–A2	5 – 5
	33 – 4
6E5–11325–00	1 – 1
	3 – 12
646–11370–01	3 – 5
6E5–11370–01	6 – 7
6E5–11371–00–1S	3 – 16
6G5–11372–00–1S	5 – 24
624–11379–00	3 – 3
6E5–11381–A2	3 – 17
	33 – 2
6G5–11382–A1	5 – 23
	33 – 8
6G5–11411–02	4 – 1
6E5–11447–00	4 – 2
663–11518–01	3 – 4
64D–11603–02	4 – 17
	4 – 19
	4 – 21
	4 – 23
64D–11604–02	4 – 17
	4 – 19
	4 – 21
	4 – 23
64D–11605–02	4 – 17
	4 – 19
	4 – 21
	4 – 23
64D–11631–02–90	4 – 16
64D–11631–22–90	4 – 18
6R5–11633–10	4 – 24
6R5–11634–10	4 – 25
64D–11635–02	4 – 16
64D–11635–22	4 – 18
64D–11636–02	4 – 16
64D–11636–22	4 – 18
64D–11642–02–90	4 – 20
64D–11642–22–90	4 – 22
64D–11645–02	4 – 20
64D–11645–22	4 – 22
64D–11646–02	4 – 20
64D–11646–22	4 – 22
60H–11650–00	4 – 26

PART NO. CODIGO Nº	REF. NO.
6E5–12411–30	1 – 2
	5 – 7
688–12412–00	5 – 8
688–12413–00–1S	5 – 9
688–12414–A1	1 – 3
	5 – 10
	33 – 5
60H–12416–00	5 – 20
6G5–12576–00	5 – 26
6G5–12581–00	21 – 9
6E5–13610–00	6 – 1
6G5–13610–00	6 – 1
6E5–13621–A1	6 – 3
	33 – 14
6G5–13641–00–1S	6 – 5
6G5–13645–A2	6 – 16
	33 – 15
60H–14198–00	7 – 25
	33 – 28
6E5–14198–A2	6 – 18
	33 – 16
	33 – 29
60H–14211–00	7 – 10
69W–14212–00	7 – 5
62Y–14227–00	7 – 22
	33 – 26
60H–14301–00	7 – 1
6G4–14301–20	7 – 1
60H–14302–00	7 – 2
6G4–14302–20	7 – 2
60H–14303–00	7 – 3
6G4–14303–20	7 – 3
6A0–14325–00	8 – 34
62Y–14334–00	7 – 11
60H–14341–00	7 – 18
6G4–14342–43	7 – 23
60H–14342–47	7 – 23
6G4–14343–72	7 – 19
6G4–14343–73	7 – 20
60H–14343–74	7 – 20
60H–14343–75	7 – 19
	7 – 21
60H–14343–77	7 – 21
66M–14355–00	7 – 24
	33 – 27
60H–14381–00	7 – 6
62Y–14383–30	7 – 8
60H–14384–00	7 – 7

PART NO. CODIGO Nº	REF. NO.
60H–14384–00	33 – 21
60H–14385–00	7 – 12
60H–14385–00	7 – 13
	33 – 23
647–14395–60	6 – 27
652–14397–00	7 – 9
	33 – 22
6R3–14440–02	6 – 25
6K7–14483–00	6 – 28
	33 – 17
624–14485–00	6 – 6
60H–14523–00	7 – 4
60H–14527–00	7 – 15
60H–14536–00	7 – 16
	33 – 25
6C5–14546–10	7 – 14
	33 – 24
6C5–14567–00	7 – 17
6E5–14711–01–CA	21 – 23
6E5–14711–10–CA	21 – 23
64D–14721–20–CA	21 – 31
64D–14721–30–CA	21 – 31
6E5–14737–00	21 – 24
60H–15100–01	3 – 2
64C–15100–23	3 – 2
6E5–15163–00–1S	4 – 3
6G5–15359–00–94	4 – 11
6E5–24304–20	8 – 1
6E5–24305–06	9 – 6
	9 – 9
6Y2–24305–06	9 – 11
6Y2–24306–0B	9 – 8
6Y2–24306–A5	9 – 1
60H–24313–00	8 – 3
6G5–24314–10	8 – 17
6E5–24315–00	8 – 22
6G5–24315–00	8 – 21
6G5–24316–10	8 – 40
60H–24317–00	8 – 45
60H–24319–00	8 – 47
60H–24321–00	8 – 46
6E5–24351–51	9 – 3
	9 – 14
61J–24360–11	9 – 5
	9 – 16
6E5–24367–01	15 – 28
6E5–24367–10	15 – 31
6G5–24376–00	8 – 43

PART NO. CODIGO Nº	REF. NO.
6G5–24377–00	8 – 44
650–24378–00	5 – 16
6E5–24378–00	8 – 20
6E5–24410–04	8 – 24
6E5–24411–01	8 – 29
6E5–24412–11	8 – 32
6E5–24413–01	8 – 26
6A0–24421–01	8 – 33
6E5–24423–00	8 – 31
648–24424–00	8 – 30
650–24431–A0	8 – 38
	33 – 18
6E5–24435–01	8 – 28
6E5–24444–01	8 – 25
6E5–24471–01	8 – 27
6E5–24486–00	8 – 37
6E5–24492–00	8 – 36
68F–24521–00	8 – 6
65L–24531–01	8 – 7
60H–24558–00	8 – 11
60H–24560–00	8 – 5
61A–24563–00	1 – 6
	8 – 9
61A–24564–00	1 – 5
	8 – 8
61U–24566–01	8 – 14
68F–24649–00	8 – 10
64D–41111–00–1S	5 – 12
6G5–41112–A1	5 – 13
	33 – 6
6R3–41113–00–1S	5 – 15
6G5–41114–A0	5 – 14
	33 – 7
6G5–41131–01–CA	21 – 17
6G5–41131–10–CA	21 – 17
64D–41132–00–CA	21 – 20
64D–41132–10–CA	21 – 20
6G5–41134–A1	21 – 21
	34 – 2
6E5–41135–A0	21 – 27
	34 – 4
6G5–41137–02–CA	21 – 7
6G5–41211–01	16 – 28
6G5–41213–10	16 – 31
6G5–41217–01	6 – 20
662–41237–01	16 – 24
	16 – 30
6E5–41256–01	6 – 21

PART NO. CODIGO Nº	REF. NO.
661–41262–02	6 – 22
6E5–41271–03	6 – 23
689–41273–00	6 – 24
688–41611–00	10 – 10
688–41612–00	10 – 11
6G5–41631–01–1S	16 – 8
61H–41632–02–1S	16 – 5
6G5–41636–01	16 – 22
6E5–42510–05–8D	18 – 10
6E5–42510–25–8D	18 – 10
6G4–42610–01	2 – 1
6G6–42610–01	2 – 1
6G5–42613–00–8D	2 – 12
6E5–42615–00	2 – 11
6G5–4261A–01	2 – 2
6E5–42647–00–1S	2 – 3
6E5–42649–01–1S	2 – 4
688–42652–00	2 – 9
6E5–42652–00	2 – 8
663–42662–00	2 – 5
6N7–42675–60	2 – 17
6N7–42676–60	2 – 18
6G4–42677–50	2 – 16
6G6–42677–50	2 – 16
6G4–42678–40	2 – 15
6G6–42678–40	2 – 15
688–42681–70	2 – 19
	2 – 20
648–42715–00	16 – 47
6E5–42716–10	15 – 34
6E5–42724–00	21 – 8
6E5–42725–00	15 – 15
688–42726–10	15 – 23
6E5–42738–01–8D	15 – 16
6E5–42741–01–8D	15 – 25
6H4–42748–00	15 – 2
6E5–42769–00	21 – 3
6E5–42771–01–8D	15 – 26
6EE–42794–40	15 – 38
6EE–42794–50	15 – 39
688–42815–01–8D	15 – 3
688–42816–00	15 – 4
6G5–42816–00	15 – 9
6E5–42816–01	15 – 10
6E5–42817–01–8D	15 – 8
64E–43111–02–8D	17 – 1
64E–43112–02–8D	17 – 7
64E–43126–00	17 – 30

PART NO. CODIGO Nº	REF. NO.
64E–43131–01	17 – 11
64E–43139–10	18 – 1
6G5–43144–00	17 – 20
6E5–43145–01	26 – 8
6G5–43148–00	17 – 25
6G5–43181–02	17 – 22
6G5–43185–02	17 – 23
64E–43311–10–8D	17 – 17
64E–43311–20–8D	17 – 17
61A–43376–00	18 – 8
64E–43800–0A	19 – 1
64E–43802–00	20 – 8
64E–43805–01	20 – 37
64E–4380F–00	20 – 33
64E–4380J–00	20 – 30
64E–43810–02	19 – 6
64E–43811–02	19 – 7
6E5–43814–02	19 – 14
64E–43816–00	20 – 17
64E–43817–00	19 – 5
64E–43817–11	20 – 19
6BC–43818–00	19 – 34
64E–4381G–00	19 – 28
64E–43820–05	19 – 16
64E–43821–05	19 – 17
64E–43822–00	19 – 18
64E–43825–03	19 – 2
64E–43827–00	20 – 22
64E–43828–01	19 – 23
64E–43829–01	19 – 24
64E–4382G–00	19 – 30
64E–43830–01	20 – 4
64E–43831–00	20 – 2
6AW–43841–00	20 – 7
64E–43843–00	20 – 6
64E–43843–10	20 – 38
64E–4384J–00	19 – 19
64E–4384N–00	19 – 31
64E–43850–00	20 – 15
64E–43851–00	20 – 11
64E–43855–00	20 – 14
64E–43858–00	20 – 12
6AW–43858–00	20 – 18
6E5–43858–00	19 – 29
72X–43858–00	20 – 5
64E–43859–00	20 – 13
64E–43860–01	20 – 20
6E5–43862–00	19 – 11

NUMERICAL INDEX
INDICE NUMERICO

PART NO. CODIGO Nº	REF. NO.
6E5–43862–00	19 – 15
6G5–43863–00	20 – 10
6E5–43864–00	19 – 21
6G5–43864–00	19 – 20
64E–43865–00	20 – 16
6G5–43865–01	20 – 35
64E–43866–00	19 – 10
64E–43867–00	19 – 9
64E–43868–00	20 – 3
64E–43869–00	19 – 27
6H1–4386K–10	20 – 29
6E5–43872–00	19 – 13
64E–43873–00	20 – 24
6E5–43874–01	19 – 22
6AW–43875–00	20 – 25
64E–43879–01	20 – 27
64E–43879–11	20 – 26
64E–4387A–00	20 – 23
64E–43880–04	20 – 28
64E–43883–00	19 – 12
64E–4388E–01	19 – 26
64E–4388E–11	20 – 1
6AW–4388J–00	19 – 3
64E–43891–00	20 – 31
64E–43892–00	20 – 34
6E5–43896–00	20 – 9
64E–43897–00	19 – 25
64E–43898–00	19 – 8
6E5–44117–00–94	16 – 35
6E5–44118–01–94	16 – 43
6E5–44120–04	16 – 49
6E5–44120–24	16 – 49
68F–44121–00	16 – 37
6E5–44122–00	16 – 38
6K1–44150–02	24 – 18
6G5–44150–03	22 – 19
703–44189–20	29 – 36
703–44189–30	29 – 42
6X3–44191–00	29 – 47
688–44194–00	16 – 13
	16 – 27
61A–44311–01	22 – 21
	24 – 20
6E5–44312–00	22 – 26
	24 – 25
6E5–44315–A0	22 – 30
	24 – 29
	34 – 13

PART NO. CODIGO Nº	REF. NO.
6E5–44315–A0	34 – 24
61A–44322–02	34 – 19
6R3–44322–42	22 – 22
	24 – 21
	34 – 29
6G5–44323–01	34 – 23
6G5–44323–41	22 – 29
	24 – 28
	34 – 30
6E5–44352–01	22 – 27
	24 – 26
	34 – 22
6E5–44361–00	23 – 2
6E5–44361–20	23 – 2
	25 – 2
6E5–44365–00	22 – 25
	23 – 3
	24 – 24
	25 – 3
	34 – 7
6E5–44366–00	23 – 1
	25 – 1
	34 – 8
6E5–44391–00	15 – 14
6E5–44511–00	18 – 33
6J9–44514–00	18 – 26
6G5–44526–00	17 – 3
6G5–44551–01–8D	18 – 13
60H–44552–00–8D	18 – 24
6J9–44555–00	18 – 16
663–44575–00	18 – 32
6E5–44575–00	18 – 15
6E5–45111–02–8D	21 – 1
6E5–45111–23–8D	21 – 1
68F–45113–01	21 – 11
	33 – 19
6G5–45114–A1	21 – 18
	34 – 3
64D–45123–00	21 – 32
6E5–45123–00	21 – 26
	34 – 6
6E5–45155–00	21 – 2
6J9–45214–00	23 – 7
	25 – 7
6J9–45215–00	23 – 8
	25 – 8
6G5–45251–02	1 – 7
	17 – 2

PART NO. CODIGO Nº	REF. NO.
6G5–45300–17–8D	22 – 1
6K1–45300–26–8D	24 – 1
6K1–45300–26–8D	22 – 1
6J9–45301–07–8D	22 – 2
	24 – 2
6E5–45318–00	21 – 29
6E5–45321–00	22 – 15
	24 – 14
6E5–45331–00–9S	22 – 33
	24 – 32
6J9–45332–00–CA	22 – 55
6K1–45332–01–CA	24 – 54
688–45341–10	22 – 7
	24 – 8
6E5–45344–00	22 – 39
	24 – 38
6J9–45371–01	1 – 9
	23 – 11
6K1–45371–02	1 – 9
	25 – 11
64D–45375–00	21 – 33
688–45375–00	22 – 11
	24 – 12
64D–45376–00	22 – 10
	24 – 11
663–45376–00	22 – 10
6E5–45378–00	22 – 12
6J8–45378–00	24 – 13
6G5–45383–01	22 – 65
	24 – 64
6G5–45384–02	22 – 66
	24 – 65
6G5–45501–02	22 – 41
6G5–45501–22	22 – 41
	24 – 40
6G5–45536–01	22 – 9
	24 – 10
6G5–45551–10	22 – 42
	24 – 41
6K1–45560–01	24 – 43
6G5–45560–10	22 – 44
6G5–45567–01	22 – 5
	24 – 6
6G5–45567–10	22 – 5
	24 – 6
6G5–45567–20	22 – 5
	24 – 6
6G5–45567–30	22 – 5

PART NO. CODIGO Nº	REF. NO.
6G5–45567–30	24 – 6
6G5–45567–40	22 – 5
	24 – 6
6G5–45567–50	22 – 5
	24 – 6
6G5–45567–60	22 – 5
	24 – 6
6K1–45570–20	24 – 56
6G5–45571–02	22 – 57
6K1–45576–00	24 – 57
6G5–45576–10	22 – 58
6G5–45577–02	22 – 62
	24 – 62
6G5–45577–10	22 – 62
	24 – 62
6G5–45577–20	22 – 62
	24 – 62
6G5–45577–30	22 – 62
	24 – 62
6G5–45577–40	22 – 62
	24 – 62
6G5–45577–50	22 – 62
	24 – 62
6G5–45577–60	22 – 62
	24 – 62
6K1–45578–01	24 – 66
6K1–45578–10	24 – 66
6K1–45578–20	24 – 66
6K1–45578–30	24 – 66
6K1–45578–40	24 – 66
6K1–45578–50	24 – 66
6K1–45578–60	24 – 66
6E5–45587–01	22 – 36
	24 – 35
6E5–45587–10	22 – 36
	24 – 35
6E5–45587–20	22 – 36
	24 – 35
6E5–45587–30	22 – 36
	24 – 35
6E5–45587–40	22 – 36
	24 – 35
6E5–45587–50	22 – 36
	24 – 35
6E5–45587–60	22 – 36
	24 – 35
6J9–45611–01	22 – 46
6K1–45611–10	24 – 45

PART NO. CODIGO Nº	REF. NO.
6G5–45631–10	22 – 53
	24 – 52
6E5–45633–01	22 – 54
	24 – 53
6E5–45634–02	22 – 47
	24 – 46
6K1–45945–00	25 – 18
6G5–45945–01	23 – 21
6K1–45947–00	25 – 18
6G5–45947–01	23 – 21
6G5–45952–00	23 – 21
6K1–45972–01	25 – 18
6G5–45972–02	23 – 21
6K1–45974–02	25 – 18
6G5–45974–03	23 – 21
6G5–45978–03	23 – 21
6E5–45987–01	23 – 16
	25 – 13
688–45997–01	23 – 17
	25 – 14
704–48119–60	30 – 11
EL8–48127–00	30 – 24
704–48128–00	30 – 64
703–48128–10	29 – 39
703–48129–00	29 – 41
704–48129–10	30 – 2
704–48129–60	30 – 69
704–48144–20	30 – 53
703–48152–10	29 – 6
703–48153–00	29 – 61
704–48153–00	30 – 58
704–48156–00	30 – 65
EL8–48164–00	30 – 42
704–48166–00	30 – 70
704–48167–30	30 – 72
704–48176–10	30 – 54
704–48178–00	30 – 71
703–48189–00	29 – 19
EL8–48191–00	30 – 17
704–48192–00	30 – 46
704–48192–P0	30 – 55
703–48198–00	29 – 16
703–48205–22	28 – 1
	29 – 1
704–48207–R0	28 – 2
	30 – 1
703–48211–10	29 – 25
703–48212–10	29 – 26

PART NO. CODIGO Nº	REF. NO.
703–48213–10	29 – 27
703–48215–10	29 – 46
704–48215–70	30 – 13
703–48219–10	29 – 34
704–48219–R0	30 – 52
703–48221–10	29 – 28
704–48221–R0	30 – 43
703–48222–20	29 – 31
704–48222–20	30 – 62
704–48222–30	30 – 33
703–48223–10	29 – 32
704–48224–00	30 – 49
703–48225–10	29 – 33
704–48225–R0	30 – 45
703–48227–00	29 – 30
704–48229–10	30 – 36
704–48229–20	30 – 60
704–48231–00	30 – 26
703–48232–00	29 – 2
704–48232–P1	30 – 41
704–48233–00	30 – 56
703–48234–00	29 – 20
704–48234–00	30 – 51
703–48235–00	29 – 5
704–48235–00	30 – 57
703–48236–00	29 – 18
703–48238–00	29 – 24
704–48238–00	30 – 40
EL8–48241–00	30 – 27
704–48242–10	30 – 44
703–48243–00	29 – 17
703–48244–00	29 – 23
EL8–48244–00	30 – 30
703–48245–00	29 – 13
EL8–48245–00	30 – 31
701–48246–00	30 – 5
703–48246–00	29 – 29
701–48248–00	29 – 15
	30 – 39
EL8–48251–00	30 – 3
703–48252–00	29 – 14
EL8–48254–00	30 – 28
EL8–48259–00	30 – 7
704–48261–00	30 – 16
703–48261–01	29 – 4
704–48262–00	30 – 8
703–48264–00	29 – 8
704–48264–00	30 – 9

NUMERICAL INDEX
INDICE NUMERICO

PART NO. CODIGO Nº	REF. NO.
704–48265–00	30 – 4
703–48265–10	29 – 11
703–48268–00	29 – 7
703–48271–00	29 – 3
704–48271–00	30 – 23
EL8–48279–00	30 – 50
703–48281–00	29 – 35
704–48281–00	30 – 14
EL8–48281–00	30 – 12
704–48283–00	30 – 18
703–48284–00	29 – 58
704–48284–P0	30 – 67
704–48285–20	30 – 68
701–48287–00	29 – 45
704–48287–00	30 – 21
703–48293–10	29 – 44
701–48320–40	28 – 3
701–48320–70	28 – 3
701–48320–80	28 – 3
6E5–48344–00	16 – 6
	16 – 41
703–48345–01	29 – 21
	30 – 20
701–48350–10	28 – 3
701–48350–50	28 – 3
703–48358–00	29 – 22
	30 – 25
6E5–48531–00	16 – 1
6E5–48538–00	16 – 2
6E5–61301–01	27 – 1
6E5–61303–00	27 – 5
6E5–61311–11	27 – 3
6E5–61313–00	27 – 2
6E5–61315–00	27 – 4
6E5–61350–02	26 – 1
6E5–61351–01	26 – 2
6E5–61355–00	26 – 5
6E5–81332–00	10 – 13
6G5–81337–00	10 – 15
6N7–81800–10	14 – 1
6N7–81801–00	14 – 8
6N7–81807–00	14 – 11
61A–81809–00	14 – 3
6N7–81810–00	14 – 5
6N7–81813–00	14 – 9
6N7–81820–10	14 – 10
6E5–81822–02–98	14 – 19
61A–81824–00	14 – 4

PART NO. CODIGO Nº	REF. NO.
6K7–81826–11	14 – 14
6E5–8182A–10	14 – 17
6E5–8182E–10	14 – 15
6E5–8182F–10	14 – 16
6K7–8182G–10	14 – 6
6E5–8182K–10	14 – 18
6N7–81830–00	14 – 13
6N7–81840–00	14 – 7
6N7–81850–10	14 – 2
6N7–81857–00	14 – 12
61A–81941–00	12 – 23
6G5–81948–11	12 – 30
6E5–81950–00	12 – 25
704–81950–10	30 – 59
689–81952–10	12 – 24
6E5–8195A–00	12 – 26
6G5–81960–A0	11 – 1
688–81961–01	11 – 8
6K1–81980–00	32 – 18
6EE–81994–40	10 – 20
6EE–81994–50	10 – 21
6EE–81995–40	10 – 22
6EE–81995–50	10 – 23
6AG–81996–00	10 – 24
6G5–82105–03	12 – 34
6E5–82116–00	12 – 29
6Y5–82117–00	31 – 15
6E5–82117–01	12 – 35
6G5–82119–00	12 – 28
6E5–82148–00	17 – 5
	17 – 8
66K–82149–00	18 – 19
68V–82149–30	18 – 19
1E6–82151–00	31 – 14
663–82151–00	12 – 10
6G5–82152–00	12 – 38
6A0–82317–00	10 – 17
6G5–82317–00	10 – 16
6E3–82370–21	12 – 5
6K1–82510–07	32 – 3
703–82510–44	29 – 48
662–82519–00	11 – 20
6R3–82519–00	11 – 21
703–82531–00	29 – 51
6E5–82531–10	12 – 8
6K1–82532–00	29 – 50
	32 – 5
703–82540–00	29 – 55

PART NO. CODIGO Nº	REF. NO.
704–82540–30	30 – 10
6R3–82553–30	31 – 17
6R3–82553–30	31 – 16
6R3–82553–80	31 – 16
682–82556–00	29 – 53
	32 – 7
688–82560–10	12 – 15
61A–82563–01	12 – 19
703–82563–31	29 – 57
704–82563–70	30 – 35
704–82563–80	30 – 61
704–82563–90	30 – 66
6K1–82570–13	32 – 1
6K1–82571–02	32 – 2
6K1–82575–01	32 – 6
688–82575–02	29 – 52
703–82577–00	29 – 49
	32 – 4
6E5–82587–00	12 – 20
6E5–82588–00	15 – 35
688–8258A–20	29 – 54
6K1–8258A–40	32 – 23
60H–82590–00	12 – 9
704–82590–10	30 – 63
703–82591–00	29 – 59
703–82592–00	29 – 60
688–82594–00	12 – 11
6E5–82594–00	15 – 37
704–82594–00	30 – 34
703–83383–11	29 – 56
688–83383–12	32 – 12
6Y5–83504–22	13 – 1
6Y5–83514–00	31 – 5
6Y5–83517–00	31 – 2
6Y5–83518–00	31 – 9
60H–83519–00	13 – 2
6Y5–83523–00	31 – 4
6Y5–83536–00	31 – 10
6Y5–83536–40	31 – 3
6Y7–83540–20	31 – 1
6Y5–83544–00	31 – 11
6Y5–83553–00	31 – 13
6E9–83557–70	12 – 32
6E5–83558–00	23 – 14
6E5–83558–10	22 – 14
6R3–83614–00	12 – 21
6K1–83614–01	32 – 8
688–83664–00	31 – 12

PART NO. CODIGO Nº	REF. NO.
6Y7–83670–00	31 – 8
64E–83672–03	18 – 3
72X–85075–L0	20 – 21
6G6–85510–01	10 – 2
663–85518–00	16 – 9
6R3–85537–00	11 – 17
6G6–85540–00	11 – 11
6R3–85542–03–1S	11 – 13
6G6–85550–02	10 – 1
6R3–85570–01	12 – 4
6G6–85580–00	10 – 3
6K1–85830–02	32 – 13
64D–86110–01	12 – 16
6G5–87149–10	12 – 27
6G5–W0001–11	33 – 1
6G5–W0001–C1	34 – 1
6E5–W0004–00	6 – 2
61A–W0078–2A	34 – 28
61A–W0078–A3	1 – 10
	34 – 18
60H–W0090–02–1S	3 – 1
64C–W0090–05–1S	3 – 1
60H–W0093–00	33 – 20
656–W2810–02	8 – 50
6E5–W4271–43–8D	15 – 1
90101–09M70	27 – 9
90101–12M03	17 – 33
90105–10M00	23 – 12
	25 – 12
90105–10M20	3 – 9
90109–08022	4 – 27
90109–12007	18 – 30
90109–14M34	18 – 20
90116–06M30	6 – 15
90116–08026	3 – 11
90119–06M09	15 – 7
	15 – 13
90119–06M10	22 – 18
	24 – 17
90119–06M61	11 – 16
90119–06M65	10 – 19
90119–06M88	13 – 5
90119–06MA2	3 – 18
	4 – 7
	4 – 15
	16 – 36
90119–06MA3	6 – 17
90119–06MA4	5 – 6

PART NO. CODIGO Nº	REF. NO.
90119–06MA5	5 – 17
90119–06MA6	5 – 11
90119–08077	21 – 13
90119–08078	21 – 6
90119–08M14	22 – 32
	24 – 31
	34 – 26
90119–08M22	15 – 22
90119–08M57	14 – 22
90119–08M76	14 – 20
90119–08M77	14 – 21
90119–08M79	21 – 12
90119–08M94	3 – 10
90119–08MA3	3 – 15
90119–08MA8	5 – 3
90119–10054	19 – 33
90119–10M89	23 – 6
	25 – 6
90149–05M05	32 – 19
90152–05M08	23 – 9
	25 – 9
90157–06013	16 – 10
90157–06M00	16 – 25
90157–06M01	15 – 29
	15 – 32
90159–05059	18 – 2
90159–05M26	13 – 6
90159–06M11	11 – 18
90159–06M14	6 – 29
90170–09M05	27 – 10
90170–14M06	27 – 6
90170–16M01	22 – 43
	24 – 42
90170–20137	10 – 8
90171–18M04	23 – 19
	25 – 16
90179–06M28	6 – 19
90183–05M02	21 – 25
90185–05002	23 – 10
	25 – 10
90185–09M01	26 – 6
	27 – 11
90185–12M12	18 – 31
90185–22M11	17 – 15
90201–06068	8 – 13
90201–08M13	16 – 20
90201–08M23	16 – 15
90201–08M54	15 – 20

PART NO. CODIGO Nº	REF. NO.
90201–10060	19 – 32
90201–10M20	26 – 7
90201–10M76	27 – 8
90201–12426	17 – 35
90201–13M01	17 – 34
90201–14M56	18 – 29
90201–15M58	18 – 21
90201–16M55	18 – 18
90201–21M18	10 – 7
90201–23M01	4 – 29
90201–26M57	18 – 27
90201–26M59	17 – 14
90201–30M92	22 – 63
90201–38M60	18 – 11
90202–08M20	16 – 39
90202–12092	16 – 19
90202–16061	16 – 52
90202–26M18	18 – 28
90202–32M19	18 – 17
90202–40M47	18 – 7
90206–10M04	16 – 33
90206–13M10	15 – 6
	15 – 12
90249–06M19	17 – 26
90250–08M07	22 – 52
	24 – 51
90266–06009	2 – 6
90266–06M02	2 – 7
90280–04M05	22 – 28
	24 – 27
	34 – 27
90280–05015	10 – 6
90282–04M00	22 – 64
	24 – 63
90340–08002	22 – 6
	24 – 7
90340–14M06	3 – 6
90386–06M12	16 – 42
90386–10M16	17 – 24
90386–12089	16 – 16
90386–13M38	15 – 5
	15 – 11
90386–16M66	16 – 51
90386–22M13	16 – 18
90386–22M98	17 – 31
	19 – 35
90386–25M31	17 – 13
90386–38M32	18 – 12

NUMERICAL INDEX
INDICE NUMERICO

PART NO. CODIGO Nº	REF. NO.
90387–06119	10 – 18
90387–06289	13 – 3
90387–06M03	11 – 14
90387–06M29	16 – 32
90387–08M16	16 – 17
90387–08M37	15 – 19
90387–10M05	17 – 27
90387–10M61	26 – 3
90430–08003	1 – 8
	22 – 8
	24 – 9
	34 – 5
90430–14115	3 – 7
90445–07M09	6 – 11
90445–07M28	6 – 8
90445–07M33	23 – 13
90445–07M45	6 – 9
90445–07M46	6 – 10
90445–07M59	6 – 12
90445–07MA3	6 – 26
90445–07ME8	22 – 13
90445–07ME9	22 – 13
90445–09097	5 – 18
90445–13M00	9 – 4
	9 – 15
90445–13M01	9 – 2
	9 – 13
90464–07M05	6 – 13
90464–12M00	10 – 5
90465–05M87	12 – 12
90465–06M86	10 – 4
90465–06M88	12 – 2
90465–08M63	17 – 18
90465–08M89	12 – 13
90465–10M91	6 – 14
90465–11M10	8 – 4
	8 – 18
	8 – 19
	8 – 23
	8 – 41
	8 – 42
	8 – 48
	8 – 49
	13 – 7
	17 – 16
	18 – 5
	23 – 15
90465–12M25	12 – 36

PART NO. CODIGO Nº	REF. NO.
90465–13M18	5 – 27
	12 – 33
90467–08004	5 – 19
90468–18008	16 – 7
	16 – 40
90480–09M12	11 – 15
90480–10M23	13 – 4
90480–10M36	15 – 24
90480–12M25	11 – 19
90480–20M05	5 – 22
90480–22M15	15 – 18
90480–25161	12 – 7
90501–12082	16 – 46
90501–16M11	5 – 21
90501–16M12	16 – 11
90501–16M37	22 – 48
	24 – 47
90506–14M24	17 – 29
90508–29M12	16 – 21
90560–12M01	26 – 4
91490–40030	23 – 20
	25 – 17
91690–30012	16 – 3
91690–30020	17 – 28
92780–06020	30 – 29
92903–05100	11 – 6
92903–06100	11 – 7
92990–05100	31 – 7
	32 – 10
	32 – 21
92990–05200	11 – 4
92990–05300	30 – 37
92990–05600	32 – 22
92990–06100	32 – 16
92990–06200	11 – 5
92990–06300	30 – 48
92990–06600	2 – 13
	15 – 30
	15 – 33
	32 – 17
92990–08600	14 – 23
	29 – 38
92990–18200	23 – 18
	25 – 15
92995–08100	21 – 16
92995–14600	18 – 23
93101–22M15	4 – 13
	33 – 12

PART NO. CODIGO Nº	REF. NO.
93101–28M16	22 – 34
	24 – 33
	34 – 14
93101–30M17	22 – 60
	24 – 60
	34 – 17
93102–08M43	20 – 36
93102–35M61	4 – 12
	33 – 11
93102–40M14	4 – 5
	33 – 9
93106–09014	22 – 17
	24 – 16
	34 – 10
93210–03261	12 – 18
93210–08287	9 – 7
	9 – 10
	9 – 12
93210–09165	16 – 50
93210–10M74	19 – 4
93210–16275	26 – 9
93210–37160	22 – 24
	24 – 23
	34 – 12
	34 – 21
93210–37MH7	18 – 6
93210–55M14	22 – 38
	24 – 37
	34 – 15
93210–58144	22 – 16
	24 – 15
	34 – 9
93210–74M35	4 – 14
	33 – 13
93210–86M38	22 – 23
	24 – 22
	34 – 11
	34 – 20
93210–97M55	22 – 61
	24 – 61
	34 – 16
93211–04001	4 – 6
	33 – 10
93306–20802	4 – 9
93306–209U0	22 – 56
93310–32337	4 – 28
93310–836U0	4 – 30
93310–954U1	4 – 8

PART NO. CODIGO Nº	REF. NO.
93311–928U5	22 – 3
	24 – 3
93311–940U3	4 – 4
93315–425V3	22 – 45
	24 – 44
93315–43061	22 – 59
	24 – 59
93317–330U2	22 – 35
	24 – 34
93332–00048	24 – 55
93332–000V3	22 – 4
93341–440U5	24 – 58
93341–465U4	24 – 5
93341–930V2	22 – 37
	24 – 36
93390–000U2	24 – 4
93410–16006	16 – 53
93410–22M11	17 – 32
93410–37M04	18 – 14
93410–40M03	4 – 10
93420–36M01	21 – 30
93430–06024	29 – 12
	30 – 6
93501–04M02	16 – 45
93503–16003	22 – 51
	24 – 50
93507–32009	22 – 49
	24 – 48
93511–32017	22 – 50
	24 – 49
93606–12019	22 – 31
	24 – 30
	34 – 25
93608–12063	3 – 8
93608–12M05	21 – 5
	21 – 10
	23 – 4
	25 – 4
93700–06M03	16 – 48
	17 – 10
	17 – 19
94702–00160	1 – 4
	5 – 28
94702–00247	1 – 4
	5 – 28
95303–06600	16 – 12
	16 – 26
95380–03600	8 – 35

PART NO. CODIGO Nº	REF. NO.
95380–05600	11 – 2
	16 – 23
	16 – 29
	29 – 9
	30 – 22
	31 – 6
	32 – 11
	32 – 20
95380–06600	2 – 14
	11 – 3
	29 – 43
	30 – 38
	32 – 15
95380–08700	21 – 15
95380–12600	17 – 36
95380–14700	27 – 7
95380–14800	18 – 22
95780–10300	18 – 9
95895–06010	21 – 4
97013–08045	16 – 14
97075–08035	15 – 21
97095–06010	17 – 21
97095–06012	12 – 22
97095–06025	16 – 34
97095–06028	8 – 2
97380–05025	29 – 10
97380–06018	30 – 19
97380–08030	29 – 37
97513–06520	11 – 10
97513–06560	10 – 9
97513–08530	16 – 44
97595–06416	8 – 12
97595–06510	17 – 6
97595–06512	11 – 22
	12 – 1
	12 – 3
	12 – 14
	12 – 37
97595–06514	8 – 15
97595–06516	2 – 10
	8 – 16
	12 – 17
	12 – 31
	15 – 17
97595–06520	5 – 25
	12 – 6
	15 – 27
	15 – 36

PART NO. CODIGO Nº	REF. NO.
97595–06530	17 – 4
97595–06550	8 – 39
97595–08516	14 – 24
97595–08520	16 – 4
	17 – 12
97595–08525	22 – 40
	24 – 39
97595–08530	21 – 19
97595–08545	21 – 14
	21 – 22
	21 – 28
97595–10545	18 – 34
	23 – 5
	25 – 5
97595–10555	18 – 25
97607–04310	20 – 32
97880–06018	10 – 12
97890–05016	30 – 73
97890–05025	30 – 15
97890–06018	30 – 47
97980–05216	6 – 4
97980–06220	11 – 12
97985–05225	11 – 9
97985–06210	10 – 14
97985–06212	17 – 9
97985–06216	18 – 4
98580–04006	29 – 40
98780–04015	3 – 13
98780–05018	30 – 32
98980–05010	32 – 9
98980–06020	32 – 14
99001–08600	22 – 20
	24 – 19